BENGAL SECRETARIAT LIBRARY

[09.] No. 27 of 1902.

Calcutta Gazette.

WEDNESDAY, JULY 2, 1902.

CONTENTS.

	Page
cations by the Lieutenant-High Court, Government	937—963
tifications by the Govern-	111—113
e Lieutenant-Governor of	133—136
... ...	819—859
gal Council	*Nil*
al Council	*Nil*
of the Bengal Legislative	*Nil*
overnor-General's Council rnor-General	*Nil*
d into the Council of the naking Laws and Regula- r Rule 23	*Nil*

	Page
APPENDIX.—Marine Notifications	243—1
APPENDIX.—Bengal Library Catalogue of Books for the first quarter ending 31st March 1902	1—17
SUPPLEMENT No. 27:—	
Resolution on the Report on Colonial Emigration for the year 1901	917
Annual Administration Report of the Meteorological Department for the year 1901-1902	919
Return of Joint-Stock Companies for the year 1901-1902	927
Resolution on the Report of the Sanitary Commissioner, Bengal for the year 1901	945
Statistical Return of Crops, Traffic by Land and Sea, Gauge readings, Vital Statistics, Results of Meteorological Observations, Circular and Eastern Canal, Railway Traffic Receipts, &c., &c.	947—

PART I.

Notifications by the Lieutenant-Governor of Bengal e High Court, Government Treasury, &c.

BY THE LIEUT.-GOVERNOR OF BENGAL.

No. 3023A.

APPOINTMENTS AND TRANSFERS.

o. 1503 A.D.—*The 26th June 1902.*—In modification of the order of t 8th April 1902, Babu Jogneshwar Biswas, Deputy Magistrate a Deputy Collector, Rajshahi, is transferred to the head-quarters stati of the Jessore district.

1577 A.D.—*The 30th June 1902.*—Mr. F. L. Peters, Assistant Super tendent of Police, on leave, is appointed to have charge of t police of the Dinajpur district, during the absence, on leave, n, or until further orders.

—*The 30th June 1902.*—Mr. T. G. Charles, District Superintendent Police, Midnapore, is appointed to act as Deputy Inspector-Gene of Police, Southern and Eastern Range, during the absence, on lea of Mr. G. D. Graham, or until further orders.

.—*The 30th June 1902.*—Mr. F. Roddis, Assistant Superintendent Police, in charge Jessore District Police, is appointed to act as Dist Superintendent of Police, Midnapore, during the absence, deputation, of Mr. T. G. Charles, or until further orders.

The 30th June 1902.—Mr. F. R. Ezechiel, Probationary As Superintendent of Police, Midnapore, is appointed to have cha the Jessore District Police, during the absence, on deputati Mr. F. Roddis, or until further orders.

No. 1588A D.—The 30th June 1902.—Mr. C. W. T. Fe Probationary Assistant Superintendent of Police, Patna, is ferred to Midnapore.

No. 1486A.D.—The 24th June 1902.—Babu Radha Nath Ra Registrar of Calcutta, is appointed to act as District Regi Assurances and Registrar of Joint-Stock Companies, Calcutta, of Mr. Behari Lal Chandra, or until further orders.

The 24th June 1902.—Babu Kripa Nath Dutt, Rural Sub-Regis Sealdah, in the district of the 24-Parganas, is appointed t Sub-Registrar of Calcutta, during the absence, on deputation, Radha Nath Ray, or until further orders.

1536A.D.—The 1st July 1902.—Dr. Prasanna Kumar Ray, Pr Presidency College, is appointed to act as Principal of that during the absence, on leave, of Mr. A. C. Edwards, o

The 1st July 1902.—Dr. E. D. Ross, Principal, Calcutta Madr appointed to act, until further orders, as a Professor in the Pre College, in addition to his own duties.

PROMOTIONS.

1536A.D.—The 28th June 1902.—The following promotio ioned in the Executive Branch of the Provincial Civil Service:-

Promoted substantively to the third grade.

ada Basu. | Maulvi Mohammad Serajul Huq

Confirmed in the fourth grade.

Chuckerbutty. | Babu Baroda Kanta Gangooly.
Babu Hiralal Banerjee.

moted substantively pro tempore *to the fourth grade.*

m. | Babu Nanda Lal Bagchi.

Confirmed in the fifth grade.

Hossain. | Maulvi Ahmad.
Maulvi Sheikh Abdulla.

moted substantively pro tempore *to the fifth grade.*

d Sen. | Babu Banku Behary Dutta.

Confirmed in the sixth grade.

r Roy. | Babu Barada Das Bose.
Babu Akshoy Kumar Sen.

moted substantively pro tempore *to the sixth grade.*

m. | Mr. T. R. Godfrey.

Confirmed in the seventh grade.

Mahanti. | Babu Jyotischandra Acharyya.
De. | „ Surendra Nath Chakravarti.

oted substantively pro tempore *to the seventh grade.*

hammad Ali. | Mr. Piyara Meerza.
Maulvi Abdul Majid.

Confirmed in the eighth grade.

Chakravarti. | Babu Burmeshwar Prosad.
ar Sen. | „ Sarat Chandra Basu.
. | „ Krishna Lal Dey.
Dutt. | „ Narendra Kumar Ghose.
rjee. | „ Hem Kumar Mullick.
Gupta. | „ Monmotho Nath Sircar.
Maulvi Syed Ali Mazhar.

h June 1902.—Babu Upendra Nath Biswas, Munsif of Bajitpur, in the district
ensingh. of Mymensingh, is allowed leave for twenty days, under article 306 (*b*) of the Civil Service Regulations, with effect from the 3rd or from the date on which he may be relieved.

h June 1902.—Babu Harendra Narayan Guha, Munsif of Raghunathpur, in
a Nagpur. Chota Nagpur, is allowed leave for thirty days, under article 306 (*b*) of the Civil Service Regulations, with effect from the 3rd July 1902, date on which he may be relieved.

38 A.D.—The 17th June 1902.—Babu Gobind Gopal Gupta, Munsif of Amta,
hly. in the district of Hooghly, is allowed leave for four months and fifteen days, under article 307 of the Civil Service Regulations, with the 2nd May 1902, in supersession of that granted to him on the 23rd April 1902.

39 A.D.—The 18th June 1902.—Babu Rama Prosad Moitra, Munsif of Patuakhali,
ergunge. in the district of Backergunge, is allowed leave for seven days, under article 306 (*b*) of the Civil Service Regulations, in extension of that him on the 11th June 1902.

th June 1902.—Babu Aghor Chandra Hazra, Munsif of Faridpur, is allowed
ipur. leave for one month, under article 306 (*b*) of the Civil Service Regulations, with effect from the 1st July 1902, or from the date on ay be relieved.

RESIGNATIONS.

06 J.D.—The 24th June 1902.—The Lieutenant-Governor accepts the resignat on
bhum. tendered by Babu Ananga Mohan Bhattacharjee of his appointment as an Honorary Magistrate of the Purulia Independent Bench, in of Manbhum.

69 J.D.—The 28th June 1902.—The Lieutenant-Governor accepts the resignation
galpur. tendered by Babu Priobrat Narain Singh of his appointment as an Honorary Magistrate of the Bongong Independent Bench, in the Bhagalpur.

04 J.D.—The 30th June 1902.—The Lieutenant-Governor accepts the resignation
tta. tendered by Dr. Mahendra Lal Sircar, C.I.E., of his appointment as a Presidency Magistrate for the Town of Calcutta.

14 J.D.—The 30th June 1902.—The Lieutenant-Governor accepts the resignation
a. tendered by Maulvi Syed Ahmed Kuli Khan of his appointment as an Honorary Magistrate of the Bankipore Independent Bench, in the district of Patna.

18 J.D.—The 30th June 1902.—The Lieutenant-Governor accepts the resignation
da. tendered by Babu Harish Chandra Chaudhury of his appointment as an Honorary Magistrate of the Sadar Independent Bench, in the district of Malda.

25 J.D.—The 30th June 1902.—The Lieutenant-Governor accepts the resignation
mparan. tendered by Babu Hazari Mul of his appointment as an Honorary Magistrate of the Bettiah Independent Bench, in the district of Champaran.

31 J.D.—The 30th June 1902.—The Lieutenant-Governor accepts the resignation
ca. tendered by the undermentioned gentlemen of their appointments as Honorary Magistrates of the Teota Independent Bench, in the district of Dacca :—

Rai Uma Kanta Das Bahadur. | Babu Kailash Chandra Mazumdar.

42 J.D.—The 30th June 1902.—The Lieutenant-Governor accepts the resignation
Parganas. tendered by Babu Nil Kanta Mukerjee of his appointment as an Honorary Magistrate of the Khardah Municipal Bench, in the district of the 24-Parganas.

61 J.D.—The 30th June 1902.—The Lieutenant-Governor accepts the resignation
na. tendered by Mr. Andrew Dougall Wilson of his appointment as an Honorary Magistrate of the Sirajganj Independent Bench, in the district of Pabna.

POWERS.

91 A.D.—The 1st July 1902.—Mr. F. W. Ward, Officiating Joint-Magistrate and
jeeling. Deputy Collector, Kurseong, Darjeeling, is vested with the powers of a Munsif and with the powers to try rent suits in Kurseong, and r powers in Siliguri as regards cases transferred by the Deputy Commissioner Terai Officer's file. He is also vested with the powers of a Sub-Registrar within ong thana and with the powers of a Small Cause Court Judge to try suits of xceeding Rs. 50 in the Siliguri and Kurseong thanas.

608½ J.D.—The 24th June 1902.—Babu Nareshwar Sahai, who has been re-
na. appointed to be an Honorary Magistrate of the Independent Bench at Sadikpur, in the district of Patna, is vested with the powers of a of the third class.

No. 1672J.D.—The 28th June 1902.—Babu Lakshmi Narain Singh, who h
Bhagalpur. appointed to be an Honorary Magistrate of the Independent
at Bongong, in the district of Bhagalpur, is vested with the
of a Magistrate of the third class.

No. 1685J.D.—The 28th June 1902.—Babu Girwardhari Lal, who has been ap
Champaran. to be an Honorary Magistrate of the Independent Be
Motihari, in the district of Champaran, is vested with the
of a Magistrate of the first class.

No. 1712J.D.—The 30th June 1902.—Babu Juggernath Trari and Maulvi Moha
Purnea. who have been appointed to be Honorary Magistrates of the
pendent Bench at Kishanganj, in the district of Purnea, are
with the powers of a Magistrate of the third class.

No. 1716J.D.—The 30th June 1902.—Under the authority vested in him by sectio
Bhagalpur. sub-section 2 of the Code of Criminal Procedure, Act V of 18
Lieutenant-Governor empowers Babu Ashutosh Bukshi, Ho
Magistrate of the Independent Bench at Madhipura, in the district of Bhagalpur, t
down evidence in criminal cases in the English language.

No. 1745J.D.—The 30th June 1902.—Babu Ambika Charan Banerjee, who has
24-Parganas. appointed to be an Honorary Magistrate of the Khardah Mu
Bench, in the district of the 24-Parganas, is vested with the
of a Magistrate of the third class.

No. 1766J.D.—The 30th June 1902.—Kazi Azhar Ahmed, who has been appointed
Malda. an Honorary Magistrate of the Sadar Independent Bench,
district of Malda, is vested with the powers of a Magistrate
third class.

C. E. BUCKLAND,
Chief Secy. to the Govt. of Beng

NOTIFICATION—No. 1600J.D.

The 24th June 1902.—Under section 3, Act I (B.C.) of 1876 (an Act to provide for
Bankura. voluntary registration of Muhammadan marriages and divo
the Lieutenant-Governor has been pleased to grant a licen
Maulvi Lutfar Rahman, authorizing him, as a temporary measure, to register Muhamm
marriages and divorces, and to exercise the other functions of a Muhammadan Regi
within thanas Indas and Sonamukhi, in the district of Bankura.

C. E. BUCKLAND,
Chief Secy. to the Govt. of Benga

NOTIFICATION—No. 1601J.D.

The 24th June 1902.—Under section 2, Act XII of 1880 (an Act for the appointm
Bankura. of persons to the office of Kazi), the Lieutenant-Governor has
pleased to grant a sanad (license) to Maulvi Lutfar Rahm
appointing him, as a temporary measure, Kazi of thanas Indas and Sonamukhi, in
district of Bankura, for the celebration of marriages and the performance of other rites
ceremonies, when application is made to him to perform any such functions.

C. E. BUCKLAND,
Chief Secy. to the Govt. of Benga

NOTIFICATION—No. 1808J.D.

The 30th June 1902.—To secure better supervision of the entire traffic of all kinds fr
Calcutta & Howrah. the Howrah Railway station, including the station yard, to
Calcutta Strand Road, the Lieutenant-Governor has been pleased
sanction the appointment of a police force, consisting of a European Inspector (to be sty
Traffic Superintendent), three European constables, four corporals and twenty constabl
Each, and all of these officers will exercise the powers of a police officer under Act V of 18
within the jurisdiction of Howrah, and for that purpose will receive certificates under secti
8 of the Act from the Inspector-General of Police. They will also exercise similar powe
under Act IV (B.C.) of 1866 within the Calcutta police jurisdiction, and for that purpo
will receive certificates under section 13 of the Act from the Commissioner of Polic
Calcutta. The police force will be exclusively under the direction and control of the Commi
sioner of Police.

C. E. BUCKLAND,
Chief Secy. to the Govt. of Bengal.

NOTIFICATION—No. 2997J.

The 28th June 1902.—Whereas it is necessary to revise the boundaries of the Lebong Cantonment, in the district of Darjeeling, His Honour the Lieutenant-Governor of Bengal is pleased, in exercise of the powers vested in him by section 4, clause 2 of Act XIII of 1889, Cantonment Act, to direct, with the sanction of His Excellency the Governor-General in Council, that the boundaries of the said Cantonment shall henceforth be as follows:—

Darjeeling.

No. 1 pillar.—No. 1 pillar is situated on the west edge of the drain of the Municipal road (Ranjeet road). The following bearings have been taken from it:—

To south end of Glenburn Tea Estate Bungalow	...	...	... 64° 10′
To north corner of Mineral Spring Tea Factory	...	...	... 116° 20′
To south chimney, Leebong Tea Estate's Manager's Bungalow	...		... 148° 30′

Boundary pillars.	Description.	Forward bearings from M.N.	Direct horizontal distance in feet.
1-2	From No. 1 the boundary runs in a northerly direction along the west edge of drain of Municipal road to No. 2 situated like No. 1 on the west edge of the drain.	10° 35′	424
2-3	From No. 2 the boundary runs as above to No. 3 ...	Not visible	1,012
3-4	From No. 3 the boundary runs as above to No. 4, which is opposite the centre of a short piece of revetment 4 feet high on the east side of the road.	25° 40′	800
4-5	From No. 4 the boundary runs as above to No. 5 situated at the extreme corner of the spur north of the Municipal cattle shed; No. 5 is also 41 feet south of centre of stone drain crossing road (measured along the road drain).	Not visible	694
5-6	From No. 5 the boundary runs as above to No. 6, which is 92 feet south of centre of stone drain running across the road.	25° 30′	371
6-7	From No. 6 the boundary runs as before to No. 7 situated 37 feet north of centre of stone drain running across road.	Not visible	307
7-8	From No. 7 the boundary runs as before to No. 8 situated exactly opposite to a culvert under the road.	Ditto	1,190
8-9	From pillar No. 8 (old Cantonment boundary pillar No. 8 the boundary runs along the inner (western) edge of the road to pillar No. 9.	Ditto	2,432
9-10	From pillar No. 9, which is situated under the western bank of the road, the boundary runs in a westerly direction to pillar No. 10.	284° 42′	138
10-11	From pillar No. 10 (bearing to south gable of Dawson daps' bungalow 7° 20′) the boundary diverges slightly towards the north to pillar No. 11.	295° 57′	160
11-12	From pillar No 11 (situated near a hut) the boundary runs still more towards the north to pillar No. 12.	314° 45′	306
12-13	From pillar No 12 the boundary proceeds with but slight change of direction to pillar No. 13.	312° 20′	84
13-14	From pillar No. 13 (on the western edge of path) the boundary passes along the western edge of the path to pillar No. 14.	Not visible	375
14-15	From pillar No. 14 the boundary diverges from the pathway in a westely direction to pillar No 15.	12° 20′	143
15-16	From pillar No. 15 the boundary diverges still more in a westerly direction to pillar No. 16.	350° 42′	133
16-17	From pillar No. 16 the boundary continues to diverge in a westerly direction to pillar No. 17.	331° 35′	179
17-18	From pillar No. 17 the boundary runs with slight change of direction to pillar No. 18.	329° 56′	171
18-19	From pillar No. 18 (which is situated on the eastern bank of the western Lebong road) the boundary follows the inner edge of the road to pillar No. 19.	Not visible	3910
19-20	From pillar No. 19 (which is old cantonment boundary pillar No. 10) the boundary runs in a southerly direction along the east edge of the western Lebong road to No. 20, which is 19 feet north of centre of stone drain across road (measured along centre of road).	Ditto	1220
20-21	As from No 19 to No. 20	Ditto	900
21-22	Ditto	Ditto	670

Boundary pillars.	Description.	Forward bearings from M.N.	Direct horizontal distance in feet.
22-23	As from No. 19 to No. 20	Not visible	390
23-24	Ditto	Ditto	355
24-25	Ditto	Ditto	912
25-26	Ditto	Ditto	418
26-27	As from No. 19 to No. 20. No. 27 is 3 feet south of centre of stone drain running across the road.	Ditto	433
27-28	From pillar No. 27 (old Cantonment boundary pillar No. 18) the boundary follows the eastern edge of the western Lebong road to pillar No. 28.	Ditto	350
28-29	From pillar No. 28 (situated under the eastern bank of the road) the boundary proceeds in an easterly direction to pillar No. 29.	105° 36′	152
29-30	From pillar No. 29 the boundary continues with slight change of direction to pillar No. 30.	104° 42′	•158
30-31	From pillar No. 30 the boundary crosses the Cart road to pillar No. 31.	173° 24′	54
31-32	From pillar No. 31 (which is situated in the bank on the eastern edge of the road) the boundary passes along the eastern edge of the road to pillar No. 32.	Not visible	810
32-33	From pillar No. 32 the boundary runs in an easterly direction to pillar No. 33.	98° 20′	188
33-34	From pillar No. 33 the boundary continues in an easterly direction to pillar No. 34.	101° 1′	78
34-34A	From pillar No. 34 (which is situated on the western edge of the bank skirting the Cart road) the boundary runs to the foot of the bank to pillar No. 34A.	101° 1′	63
34A-35	From pillar No. 34A the boundary runs along the western bank of the road to pillar No. 35.	Not visible	783
35-36	From pillar No. 35 (which is 40 feet from the cemetery wall corner) the boundary crosses the Cart road in an easterly direction to pillar No. 36.	74° 20′	82
36-37	From pillar No. 36 the boundary runs in a south-easterly direction to pillar No. 37.	117° 20′	29
37-38	From pillar No. 37 the boundary runs in a south-easterly direction to pillar No. 38.	124° 54′	80
38-39	From pillar No. 38 (which is on the western edge of the lower bend of the Cart road) the boundary proceeds along the western edge of the road to pillar No. 39 (which is the old Cantonment boundary pillar No. 21). (*N.B.*—The distance is measured to the point where the straight line joining Nos. 39 and 40 pillars cuts the edge of the road.)	Not visible	392
39-40	From No. 39 the boundary runs east across the Lebong spur to No. 40.	103° 30′	129
40-41	As from No 39 to No. 40	103° 0′	50
41-42	Ditto	103° 0′	61
42-43	Ditto	104° 0′	117
43-44	Ditto	102° 0′	83
44-45	Ditto	102° 0′	32
45-1	From No. 45 the boundary runs in a northerly direction along the west edge of drain of Municipal road to No. 1.	Not visible	325

N.B.—The following distances are measured along the centre of the road:—

From pillar No. 45 to No. 8,
Ditto „ 19 „ „ 27,

and the following along the edge of the road as indicated in the description above:—

From pillar No. 8 to No. 9.
Ditto „ 13 „ „ 14.
Ditto „ 18 „ „ 19.
From pillar No. 27 to No. 28.
Ditto „ 31 „ „ 33.
Ditto „ 34 „ „ 35.
From pillar No. 38 to No. 39.

Pillars Nos. 1, 2, 3, 4, 5, 6, 7, 8, 19, 20, 21, 22, 23, 24, 25, 26, 27, 39, 40, 41, 42, 43, 44, 45 are the old Cantonment boundary pillars Nos. 1, 2, 3, 4, 5, 6, 7, 8, 10, 11, 12, 13, 14, 15, 16, 17, 18, 21, 22, 23, 24, 25, 26, 27, respectively, and their descriptions are taken with certain necessary alterations from the *Calcutta Gazette* of 26th January 1898, Notification No. 573J., Magnetic Variation 2°—48′E.

C. E. BUCKLAND,
Chief Secy. to the Govt. of Bengal.

PUBLIC WORKS DEPARTMENT.

ESTABLISHMENT.

The 28th June 1902.

No. 138.—Mr. W. B. Bucknill, Assistant Engineer, is, on return from the Education Department, attached to the office of the Superintending Engineer, South-Western Circle until further orders.

No. 139.—Mr. H. H. Stevens, Assistant Engineer, Champaran Division, is granted Language Leave for three months, under paragraph 191, Chapter II, Public Works Department Code, Volume I, with effect from 1st July 1902, or such subsequent date as he may avail himself of it.

No. 140.—Mr. G. G. Dey, Assistant Engineer, Champaran Division, is granted Language Leave for three months, under paragraph 191, Chapter II, Public Works Department Code, Volume I, with effect from 6th July 1902, or such subsequent date as he may avail himself of it.

D. B. HORN,
Offg. Secy. to the Govt. of Bengal.

IRRIGATION DEPARTMENT.

The 1st July 1902.

No. 141.—Notification.—In exercise of the powers conferred on him by sections 78 and 99 (*d*) of Act III (B.C.) of 1876, the Hon'ble the Lieutenant-Governor of Bengal is pleased to make the following alteration in item 1 of the Schedule of Rates to be charged for water supplied from the Orissa Canals as fixed in Notification No. 118, dated the 23rd May 1899. The revised rate will be charged for water supplied on leases executed from the date of this notification.

A draft of the alteration was published in the *Calcutta Gazette* of the dates noted in the margin as Notification No. 108, dated the 20th May 1902.

The 21st and 28th May, and 4th, 11th, 18th and 25th June 1902.

	Per man. Rs. A.
1. On a lease for a term of years for the irrigation of all crops on the land leased (supply of water given from 16th June to 31st March in each year)	1 12

No. 142.—Declaration.—Whereas it appears to the Lieutenant-Governor of Bengal that land is required to be taken by Government at the public expense for a public purpose, viz., for the diversion of the Mosan river on the Tribeni Canal, in the village of Bell, pargana Majhowa, zilla Champaran, it is hereby declared that for the above purpose a piece of land measuring, more or less, 377 bighas 15 cottahs and 15 chitaks of standard measurement, as per demarcation made on the spot, is required within the aforesaid village of Bell.

This declaration is made, under the provisions of section 6 of Act I of 1894, to all whom it may concern.

A plan of the land may be inspected in the office of the Executive Engineer, Champaran Division, Matihari.

D. B. HORN,
Offg. Secy. to the Govt. of Bengal.

RAILWAY DEPARTMENT.

The 1st July 1902.

No. 143R.—Declaration.—Whereas it appears to the Lieutenant-Governor of Bengal that land is required to be taken by Government at the public expense for a public purpose, viz, for the East Indian Railway Company's drain for staff quarters in connection with the Hooghly junction station, in the village of Kewta, tahsil Arsha, district Hooghly, it is hereby declared that for the above purpose a piece of land measuring, more or less, 19 cottahs and 14½ chitaks of standard measurement (corresponding to 0 33 acre, bounded on the north and south by nicks on the ground passing through the lands of Sham Ghose and others, on the east by a nala, and on the west by the Railway wire fencing of the land recently acquired, is required within the aforesaid village.

Mines of coal, iron-stone, slate or other minerals lying under the land, except only such parts of the mines and minerals as it may be necessary to dig or carry away or use in the construction of the work for the purpose of which the land is being acquired, are not needed.

This declaration is made, under the provisions of section 6 of Act I of 1894, and section 3, clause (1), Act XVIII of 1885, to all whom it may concern.

A plan of the land may be inspected in the office of the Hooghly Collectorate and in the office of the District Engineer, East Indian Railway, at Howrah.

No. 144R.—Declaration.—Whereas it appears to the Lieutenant-Governor of Bengal that land is required to be taken by Government at the public expense for a public purpose, viz., for additional staff quarters at Rajbandh, East Indian Railway, in the village of Amlajora, pargana Seelampur, zilla Burdwan, it is hereby declared that for the above purpose a piece of land measuring, more or less, 1 bigha 10 cottahs and 8 88 chitaks of standard measurement (corresponding to 2 roods 0·81 pole), bounded on the north and west by the khas patit land, on the south by the East Indian Railway Company's land, and on the east by the homestead lands of Rash Behari Hari, is required within the aforesaid village.

Mines of coal, iron-stone, slate or other minerals lying under the land, except only such parts of the mines and minerals as it may be necessary to dig or carry away or use in the construction of the work for the purpose of which the land is being acquired, are not needed.

This declaration is made, under the provisions of section 6 of Act I of 1894, and section 3, clause (1), Act XVIII of 1885, to all whom it may concern.

A plan of the land may be inspected in the office of the District Engineer, East Indian Railway, Asansol.

W. A. INGLIS,
Offg. Secy. to the Govt. of Bengal.

MARINE DEPARTMENT.

The 28th June 1902.

No. 88Marine.—Intimation having been received of the outbreak of plague in Canton, it is hereby notified for general information that Canton is declared an infected port within the meaning of the Venice Sanitary Convention regulations, and that the regulations for the prevention of the introduction of plague by sea, in force in the ports of Bengal, will be enforced in the ports of Orissa and in the port of Chittagong against vessels arriving from Canton.

D. B. HORN,
Offg. Secy. to the Govt. of Bengal.

SUBORDINATE CIVIL SERVICE.

No. 3030A.

No. 1508A.D.—The 24th June 1902.—Babu Chandra Kumar Mathur, substantive *pro tempore* Sub-Deputy Collector, Singhbhum, is transferred to the head-quarters station of the Angul district.

Singhbhum. Angul.

No. 1514A.D.—The 26th June 1902.—Babu Ananta Mohan Ray, substantive *pro tempore* Sub-Deputy Collector, Puri, is transferred to the Bhadrak subdivision of the district of Balasore.

Puri. Balasore.

No. 1530A.D.—The 27th June 1902.—Babu Jogendra Chandra Bhanja, Sub-Deputy Collector, on leave, is posted to the head-quarters station of the Mymensingh district.

Mymensingh.

No. 1546A.D.—The 30th June 1902.—Babu Radhakrishna Goswami, Probationary Sub-Deputy Collector, Mymensingh, is appointed substantively *pro tempore* to be a Sub-Deputy Collector of the fourth grade, and is posted to the Dacca Division.

Mymensingh. Dacca Division.

He is also vested with the powers of a Magistrate of the third class.

No. 1579A.D.—The 30th June 1902.—The following confirmations, promotions, and appointments are sanctioned in the grades of Sub-Deputy Collectors :—

Confirmed in the first grade.

Maulvi Mohamad Lateefallam.

Promoted substantively pro tempore *to the first grade.*

Babu Hori Mohun Dutta.

Confirmed in the second grade.

Babu Jadu Nath Dass.

Promoted substantively pro tempore *to the second grade.*

Babu Bijoy Kumar Ganguli. | Babu Hemanto Kumar Moitro.

Confirmed in the third grade.

Babu Akhil Kumar Chatterjee. | Babu Saroda Nunda Das.

Appointed substantively to the fourth grade, but to continue to be substantive pro tempore *in the third grade.*

Babu Bhavani Prasada. | Mr. P. M. Robertson.
Maulvi Mahammed Choinuddin. | Maulvi Masudul Hosain.
Maulvi Saiyad Tajammul Ali.

C. E. BUCKLAND,
Chief Secy. to the Govt. of Benga.

REGISTRATION DEPARTMENT.

No. 1490A.D.—The 24th June 1902.—Babu Kanai Lal Mitter is appointed to act as Rural Sub-Registrar of Sealdah, in the district of the 24-Parganas, during the absence, on deputation, of Babu Kripa Nath Dutt, or until further orders.

24-Parganas.

No. 770P.D.—The 30th June 1902.—Babu Bhubaneswar Narayan Sing is appointed to be Rural Sub-Registrar of Barhi, in the district of Hazaribagh, *vice* Babu Shew Sahay Lall, deceased.

Hazaribagh.

No. 771P.D.—The 30th June 1902.—Maulvi Afsaruddin Ahmed, Rural Sub-Registrar of Chandina, in the district of Tippera, is appointed to be Rural Sub-Registrar of Kasba, in the same district.

Tippera.

No. 772P.D.—The 30th June 1902.—Khaja Mahomed Munzoor, Rural Sub-Registrar of Narayanganj, in the district of Dacca, is appointed to be Rural Sub-Registrar of Chandina, in the district of Tippera.

Dacca.
Tippera.

2. This cancels Notification No. 473P.D., dated the 6th June 1902, appointing Khaja Mahomed Munzoor to be Rural Sub-Registrar of Kasba, in the district of Tippera.

C. E. BUCKLAND,
Chief Secy. to the Govt. of Bengal.

JAIL DEPARTMENT.

No. 7800, dated Calcutta, the 25th June 1902.—Captain R. H. Maddox, I.M.S., made over charge of the Presidency Jail to Captain J. Mulvany, I.M.S., on the afternoon of the 20th June 1902.

No. 7888, dated Calcutta, the 28th June 1902.—Mr. M. S. Emerson made over charge of the Bhagalpur Central Jail to Captain E. A. R. Newman, I.M.S, on the forenoon of the 23rd June 1902.

W. J. BUCHANAN, MAJOR, I.M.S.,
for *Inspector-General of Jails, Bengal.*

CIVIL MEDICAL DEPARTMENT, BENGAL.

No. 1640D., dated Darjeeling, the 24th June 1902.—Assistant Surgeon Ras Behari Bakai is appointed to do supernumerary duty at the Medical College Hospital, Calcutta, until further orders, with effect from the forenoon of the 8th June 1902.

No. 1648D., dated the 24th June 1902.—Assistant Surgeon Satya Saran Chakravarti performed the duties of Assistant Apothecary, Medical College Hospital, Calcutta, from the afternoon of the 14th May to the afternoon of the 5th June 1902, in addition to his own duties as Medical and Surgical Registrar to the College Hospital.

No. 1666D., dated Darjeeling, the 25th June 1902.—Assistant Surgeon Rai Guru Charan Das Gupta Bahadur is appointed to the Buxar subdivision, in the Shahabad district, *vice* Assistant Surgeon Mathura Nath Sen.

No. 1731D., dated Darjeeling, the 27th June 1902.—Assistant Surgeon Behari Lal Pal, officiating at the Baraset subdivision and Dispensary, in the 24-Parganas district, is appointed to the Purnea Dispensary, *vice* Assistant Surgeon Durga Nanda Sen, transferred.

No. 1736D., dated the 27th June 1902.—Assistant Surgeon Durga Nanda Sen of the Purnea Dispensary is appointed to the Baraset subdivision and Dispensary, in the 24-Parganas district, *vice* Assistant Surgeon Behari Lal Pal, transferred.

T. H. HENDLEY, COL., I.M.S.,
Inspector-General of Civil Hospitals, Bengal.

TREASURY NOTICE.

DEPUTY COLLECTOR BABU BASANTA KUMAR RAHA is hereby placed in charge of the Bankura Treasury, *vice* Babu Kunja Behari Goswami, transferred with retrospective effect from the afternoon of the 18th June 1902, and is authorized to draw bills on other treasuries.

R. CARSTAIRS, *Commissioner.*

COMMR.'S OFFICE, BURDWAN DIVN., CHINSURA, *the 24th June 1902.*

EDUCATION DEPARTMENT, BENGAL.

JUNIOR SCHOLARS, 1902.

Name of Scholar.	School from which he comes.	College in which the scholarship is made tenable.
1	2	3
First grade—(10).		
Rajendra Prosad	Chapra Zila School ...	Presidency College.
Mani Mohan Sen	City Collegiate School ...	Ditto.
Joges Chandra Mukherji ...	Hooghly Collegiate School ...	Hooghly College.
Hem Chundra Gui ...	Ditto ditto ...	Ditto.
Binod Bihari Sarkar ...	Krishnagar Collegiate School	Krishnagar College.
Jatinath Ghose ...	Bhagalpur Zila School ...	T. N. Jubilee College.
Karunamay Ray ...	Birbhum Zila School ...	Presidency College.
Ramanugraha Narayan Sinha...	Chapra Zila School ...	Ditto.
Harendra Krisna Banerji ...	Birbhum Zila School ...	Ditto.
Satis Chandra Sarkar ...	South Suburban School ...	Ditto.
Town of Calcutta.		
Second grade—(6).		
Satis Chandra Sinha ...	Metropolitan Institution ...	Presidency College.
Dhirendra Nath Ganguli ...	South Suburban School ...	Ditto.
Tarunanga Nath Banerjea ...	Central Collegiate School ...	Ditto.
Sudhir Chandra Majumdar ...	Albert Collegiate School ...	Albert College.
Chandi Charan De ...	G. A. Institution ...	General Assembly's Institution.
Dhirendra Nath Sen ...	Hare School	Presidency College.
Third grade—(11).		
Sisir Kumar Ghose ..	Metropolitan Institution ...	Metropolitan Institution.
Sisir Kumar Bardhan ...	Sil's Free College ...	Bangabasi College.
Narendra Nath Banerjea ...	Oriental Seminary ...	Presidency College.
Lalit Mohan Chakravarti ...	South Suburban School ...	Ditto.
Prafulla Chandra Sen ...	Hindu School	General Assembly's Institution.
Nirmal Chandra Sarkar ...	Ditto	Presidency College.
Sachindra Kumar Ghosh ...	Sil's Free College ...	General Assembly's Institution.
Sarat Chandra Nandan ...	L. M. S. Institution Bhawanipur	L. M. S. Institution.
Bijayananda Sen *Gupta* ...	Hindu School	Presidency College.
Nani Lal Mallick ...	G. A. Institution ...	General Assembly's Institution.
Phanindra Chandra Sett ...	Hindu School ...	Presidency College.
Presidency Division—Outside Calcutta.		
Second grade—(6).		
Surendra Nath Ray ...	Krishnath Collegiate School, Berhampore.	Berhampore College.
Radha Kanta Das ...	Santipur Municipal School ...	Presidency College.
Kalipada Mitra ...	Senhati School ...	General Assembly's Institution.
Nirendra Nath Ray ...	Barahanagar Victoria School ...	Presidency College.
Mahendra Nath Goswami ...	Senhati School ...	General Assembly's Institution.
Jatindro Nath Ghosh ...	Khulna Zila School ...	Presidency College.

Name of Scholar.	School from which he comes.	College in which the scholarship is made tenable.
1	2	3
	Third grade—(12).	
Akhil Chandra Maitra ...	Krishnaghur Collegiate School	General Assembly's Institution.
Satyendra Mohan De ...	Halisahar H. E. School ...	Hooghly College.
Girindra Nath Mitra ...	Meherpore H. E. School ...	Krishnagar College.
Haris Chandra Das ...	Barrackpore Government School	Presidency College.
Sarat Chandra Sahu ...	Halisahar H. E. School ...	Hooghly College.
Raghumani Bhattacharya ...	Santipur Municipal School ...	Presidency College.
Akhay Kumar Ghosh ...	Narail Victoria School ...	Narail Victoria College.
Hari Prosad Gupta ...	Jangipur H. E. School ...	General Assembly's Institution
Sripati Ray ...	Krishnath Collegiate School ...	Berhampore College
Rames Chandra Sen ...	Kalia Remodelled School ...	Cooch Behar Victoria College.
Hemendra Nath Basu ...	Khulna Zila School ...	General Assembly's Institution.
Brajendra Nath Mazumdar ...	Dowlatpore H. E. School ...	Ripon College.
	Burdwan Division.	
	Second grade—(6).	
Gourhari Ray ...	Birbhum Zila School ...	Presidency College.
Surendra Nath Bhattacharyya...	Raniganj H. E. School ...	Burdwan Raj College.
Haripada Sen ...	Bali Rivers Thompson School ...	Utterpara College.
Bejay Panchanan Ghose ...	Howrah Zila School ...	Presidency College.
Ramani Mohan Singha ...	Birbhum Zila School ...	Ditto.
Ram Taran Nasipuri ...	Rampurhat H. E. School ...	Ripon College.
	Third grade.	
Satis Chandra Sarkar ...	Maisadal Raj School ...	Sanskrit College.
Chandra Nath Das ...	Hoogbly Collegiate ...	Hooghly College.
Debendra Nath Mandal ...	Ditto ...	Ditto.
Profulla Chandra Banerjee ...	Midnapore Collegiate School ...	Midnapore College.
Giris Chandra Das ...	Maisadal Raj School ...	Revenshaw College.
Raj Ballab Mukherjee ...	Burdwan Raj Collegiate School	Burdwan Raj College.
Manindra Nath Banerjee ..	Birbhum Zila School ...	Presidency College.
Girija Bhushan Sarkar ...	Ulubaria H. E. School ...	Sanskrit College.
Jugal Kisore Sinha ...	Kuchkuchia H. E. School ...	General Assembly's Institution.
Akshay Narayan Adhbharya ...	Ditto ...	Ditto.
Hemendra Nath Bose ...	Katwa High School ...	Presidency College.
Bhupati Nath Mukerji ...	Rampore Hât High English School.	Ripon College.
	Rajshahi Division.	
	Second grade—(6) (5+1).	
Giris Chandra Sen ...	Jalpaiguri Zila School ...	Presidency College.
Surendra Chandra Chowdhuri...	Pabna Institution ...	Pabna Institution.
Protap Chandra Sen *Gupta* ...	Rangpur Zila School ...	Rajshahi College.
Mahendra Lal Lahiri ...	Ditto ...	Presidency College.
Giris Chandra Maitra ...	Pabna Institution ..	Pabna Institution.
*Satis Chandra Ghosh ...	Rangpur Zila School ...	St. Xavier's College.
	Third grade—(9+1).	
Golam Rabbani Ahmed ...	Dinajpur Zila School ...	Calcutta Madrassa.
Bireswar Bagchi ..	Rajshahi Collegiate School ...	Rajshahi College.
Krishna Prosad Sanyal ...	Natore Maharaja's School ...	Presidency College.
Benode Behari De ...	Serajganj Banwari Lal's School	Ditto.
Chuni Lal Kundu ...	Pabna Institution ...	Pabna Institution.
Mahomad Hedayat Ali ...	Jalpaiguri Zila School ...	Calcutta Madrassa.
Jogendra Mohan Sen ...	Gaibanda School ...	General Assembly's Institution.
*Jyotis Chandra Ray ...	Rangpur Zila School ...	Presidency College.
Ramjap Ajha ...	Darjeeling High School ...	Ripon College.
Sures Chandra Chakravarti ...	Bogra Zila School ...	Victoria College, Cooch Behar.

* Rungpore special scholarships.

Name of Scholar.	School from which he comes.	College in which the scholarship is made tenable.
1	2	3
Dacca Division.		
Second grade—(6).		
Sures Chandra Lahiri ...	Mymensingh Zila School ...	Presidency College.
Sailendra Nath Bhattacharya ...	Dhalla H. E. School ...	Dacca College
Nazimuddin Ahmed ...	Barisal Zila School ...	Raj Chandra College.
Jatindra Mohan Chakravarti ...	Dacca Collegiate School ...	Dacca College.
Birendra Kumar De ...	Netrokona Dutt High School...	City College, Mymensingh.
Manoranjan Sen ...	B. M. Institution ...	B M. Institution, Barisal.
Third grade—(12).		
Ram Chandra Bhattacharyya ...	Mymensingh Zila School ...	Metropolitan Institution
Kshetra Mohan Chakravarti ..	Munshiganj H. E. School ...	Dacca College.
Panchanan Chakravarti ...	Faridpur Zila School ...	General Assembly's Institution
Hem Chandra Sen ...	Swarungram Radha Nath High School.	Dacca College.
Pramadananda Kundu ...	Munshiganj H. E. School ...	Ditto.
Kamini Mohan Biswas ...	Netrokona Dutt High School...	Ditto.
Kshetra Nath Ray ...	Bhanga H. E. School ...	General Assembly's Institution.
Jatindra Mohan Ganguli ...	Jchapore H. E. School ...	Dacca College.
Nisi Kanta Chakravarti ...	Barisal Zila School ...	Ditto.
Jayanta Kumar Ghosh ...	Mymensingh Zila School ...	General Assembly's Institution.
Surendra Nath Bose ...	Barisal Zila School ...	Ditto
Hari Charan Nath ...	Ditto ...	B. M. Institution, Barisal.
Chittagong Division.		
Second grade—(2).		
Atal Behari Datta ...	Comilla Zila School ...	Presidency College.
Satis Chandra Sen ...	Ditto ...	Dacca College.
Third grade—(6).		
Dwarka Nath Majumdar ...	Feni High School ...	Comilla Victoria College.
Janaki Nath Sarkar ...	Comila Zila School ...	Dacca College.
Chandra Kumar Das ...	Patiya High School ...	Chittagong College.
Samiruddin Kazi ...	Brahmanbaria Annada High School.	Presidency College.
Aparena Charan Sen ...	Chittagong National Institution	Chittagong College.
Maung Rai Phaw ...	Rangamati Government High School.	Ditto.
Patna Division.		
Second grade—(6).		
Prem Narayan *Das* ..	Patna Collegiate School ...	Patna College.
Abinas Chandra Mazumdar ...	Darbhanga Northbrook School	Presidency College.
Saraswati Sahay	Muzaffarpur Mukerjee's Seminary.	Bhumihar Brahman College.
Ambica Prosad	Gaya Sahebganj School ...	Patna College.
Padarnath Ram ...	Chapra Zilla School ...	Ditto.
Abul Hossain Muhammad Tayab.	Bihar H. E. School ...	Ditto.

Name of Scholar.	School from which he comes.	College in which the scholarship is made tenable.
1	2	3
	Third grade—(12).	
Mahomed Abu Sayed ...	Gaya Zila School ...	Patna College.
Manik Prosad	Gaya Town School ...	Ditto.
Mahamad Mainuddin ...	Patna Collegiate School ...	Ditto.
Natobar Datta	Muzaffarpur Mukerjee's Seminary.	General Assembly's Institution.
Satis Chandra Das ...	Chapra Zila School ...	Ditto.
Ram Dayal Sinha ...	Bihar N. Collegiate School ...	Bihar National College.
Dhirendra Nath Singha ...	Muzaffarpur Mukerjee's Seminary.	General Assembly's Institution.
Gaya Prosad ...	Chapra Zila School ...	Patna College.
Mazaffer Imam Muhammad Wahid.	Matihari Zila School ...	Ditto.
Debi Prosad *Khaitan** ...	Buxar H. E. School ...	Presidency College.
Rai Braj Behari Saran ...	Ditto ...	Patna College.
Chandrika Prosad ...	Darbhanga Northbrook School.	D. J. College, Monghyr.
	Bhagalpur Division.	
	Second grade—(3).	
Pramatha Nath Basu ...	Bhagalpur Zila School ...	Presidency College.
Panchanan Das ...	Dumka Zila School ...	Ditto.
Mahi Mohan Sanyal ...	Purnea Zila School ...	Ditto.
	Third grade—(9).	
Tarak Das Sinha ...	Jamalpur H. E. School ...	D. J. College, Monghyr.
Guru Das Sinha ...	T. N. Jubilee Institution, Bhagalpur.	T. N. Jubilee College.
Ram Deb Mukerjea ...	Ditto ditto ...	Ditto.
Charu Chandra Tarafdar ...	Bharaidangi Jubilee Institution	Presidency College.
Satis Chandra Ganguli ...	Malda Zila School ..	Dacca College.
Dhirendriya Nath Maitra ..	Purnea Zila School ...	T. N. Jubilee College.
Manindra Bhushan Sinha ...	Deoghur H. E. School ...	Presidency College.
Monmotha Nath Sarkar ...	Jamalpur H. E. School ...	D. J. College, Monghyr.
Bhabani Charan Chakravarti ...	Pakur H. E. School ...	General Assembly's College.
	Chota Nagpur Division.	
	Second grade—(2).	
Kamini Kumar Banerjea ...	Hazaribagh Zila School ..	D. U. M. College. Hazaribagh.
Prayag Madhab Kundu ...	Ranchi Zila School ...	Presidency College.
	Third grade—(5).	
Rampada Banerjee ...	Purulia Zila School ...	T. N. Jubilee, Bhagalpur.
Haladhar Ram ...	Ranchi Zila School ...	Patna College.
Satyendra Bhushan Mitra ...	Hazaribagh Zila School ...	Presidency College.
Luchi Narayan Sinha ...	Palamau Zila School ...	Burdwan Raj College.
Akshoy Kumar Sengupta ...	Chaibassa Zila School ...	Dacca College.
	Orissa Division.	
	Second grade—(4).	
Kamaruddin Khan ...	Cuttack Peary Mohan Academy	Ravenshaw College.
Abdul Shakur	Ravenshaw Collegiate School	Ditto.
Surendra Nath Mukerjee ...	Ditto ...	Ditto.
Satis Chandra Bose ...	Ditto ...	Ditto.

NAME OF SCHOLAR.	School from which he comes.	College in which the scholarship is made tenable.
1	2	3
	Third grade—(6).	
Sadananda Pattu Nayak ...	Ravenshaw Collegiate School	Ravenshaw College.
Haribar Das	Puri Zila School ...	Ditto.
Shamsuddin Khan ...	Piyari Mohan Academy, Cuttack	Ditto.
Hem Chandra Mukerjee ...	Ravenshaw Collegiate School	Ditto.
Shyama Charan Dasadhikari ...	Balasore Zila School ...	Ditto.
Mahendra Prosad Dutta ...	Bhadrak H. E. School ...	Ditto.
	SPECIAL SCHOLARSHIP FOR FEMALES.	
	First grade.	
Hiranmayi Sen	Bramha Balika Sikhalay ...	Bethune College.
	Second grade.	
Gladys VonLintzgy ..	Loreto House	Loreto House.
	Third grade.	
Swarnalata Das ...	Bramha Balika Sikshalay ...	Bethune College.
	DURGA CHARAN LAHA, SCHOLARSHIP OF Rs. 10, TENABLE FOR TWO YEARS.	
Binod Bihari Chatterji ...	Noakhali Zila School ...	Comilla Victoria College.

The 1st July 1902.

A. PEDLER,
Director of Public Instruction, Bengal.

ENGLISH TEACHERSHIP EXAMINATION, 1902.

THE undermentioned candidates have passed the English Teachership Examination 1902:—

[In alphabetical order.]

FIRST GRADE CERTIFICATES.

Name.	Centre.
Bandopadhyaya, Priya Nath	Calcutta.
Banerjee, Abinash Chandra	Ditto.
Bhattacharya, Guru Bandhu	Dacca.
Jugal Kishore	Patna.
Rama Prasad	Do.

SECOND GRADE CERTIFICATES.

Chakravarty, Jogendra Nath	Dacca.
Lakshmi Narayan	Patna.
Mazumdar, Jogendra Nath	Dacca.
Shaik Bulaki	Patna.
Syed Muhammad Hadi	Do.
Wali-ul-Huq	Do.

THIRD GRADE CERTIFICATES.

Acharjya, Sarada Charan	Calcutta.
Basu, Bankim Chandra	Dacca.
Mukerjee, Lal Gopal	Calcutta.
Raut, Sanatan	Cuttack.

DARJEELING,
The 12th June 1902.

J. S. SLATER,
Offg. Director of Public Instruction, Bengal.

ERNACULAR MASTERSHIP EXAMINATION, PATNA AND BHAGALPUR DIVISIONS, 1902.

THE undermentioned candidates have passed :—

[In order of merit.]

FIRST GRADE.

High.

Name.	Age. Yrs. M.	School.	Marks.
Bhattu Ram	... 20 11	Patna Training School	... 391
Deo Narayan Ray	... 19 2	„ „ „	... 382
Chamak Lal Jha	... 19 1	„ „ „	... 380
Pratham Lal Jha	... 18 3	„ „ „	... 378
Daroga Misra	... 19 1	„ „ „	... 369
Iswar Prasad Pande	... 18 3	„ „ „	... 363

Medium.

Ram Sundar Ray	... 19 7	Patna Training School	... 359
Sinheswar Prasad Sinha	... 19 4	„ „ „	... 322
Ram Rup Chaube	... 18 8	„ „ „	... 310

Low.

Ram Lagan Sinha	... .	Head Guru, Pathia U. P. School, Bhagalpur	... 228
Syamalia Lal Tewari	... .	Head Pandit, Arwal M. E. School, Gaya	... 209

SECOND GRADE.

High.

Bahadur Lal	... 15 9	Patna Training School	... 623
Jang Bahadur Lal	... 21 5	„ „ „	... 597
Chaturbhuj Ram	... 18 8	„ „ „	... 596
Ram Khelwan Sinha	... 17 4	„ „ „	... 586½

Medium.

Jhari Ram	... 18 5	Patna Training School	... 544
Ram Sundar Ray	... 16 9	„ „ „	... 538
Laksmi Narain Jha	... 17 1	„ „ „	... 534½
Kirti Narain Sinha	... 16 5	„ „ „	... 523½
Siv Dhyan Pande	... 19 9	„ „ „	... 511
Ram Chiz Lal	... 17 5	„ „ „	... 503
Hanuman Ray	... 19 8	„ „ „	... 496
Dev Narain Ray	... 20 8	„ „ „	... 474
Sirtaz Ray	... 16 9	„ „ „	... 471
Nand Kumar Pathak	... 17 9	„ „ „	... 461½
Aditya Prasad	... 17 4	„ „ „	... 453
Abir Mahthon	... 17 5	„ „ „	... 435½
Amar Dev Sinha	... 17 5	„ „ „	... 435
Raj Narain Lal	... 17 9	„ „ „	... 428½
Fauzdar Ram	... 23 0	Head Guru, Bettiah Municipal U. P. School, Champaran	... 403½

Low.

Nathu Lal	... .	Head Pandit, Bilaspur Raj M. V. School, Darbhanga	... 415
Darab Nath Jha	... .	Head Guru, Patsar U. P. School, Bhagalpur	... 363½

THIRD GRADE.

High.

Ram Ratan Ojha	... 17 8	Patna Training School	... 540
Chandrika Prasad	... 15 2	„ „ „	... 539
Ram Krishna Pande	... 18 2	„ „ „	... 505½

THIRD GRADE—*concluded.*

Medium.

Name.	Age. Yrs. M.	School.	Marks.
Bujharth Sinha	... 15 11	Patna Training School	... 469
Bulaki Pandit	... 23 5	„ „ „	... 461
Dalganjan Deo Tewari	... 16 2	„ „ „	... 459
Guru Sahai Sinha	... 17 5	„ „ „	... 458
Subarna Pande	... 15 8	„ „ „	... 450½
Rama Prasad	... 17 2	„ „ „	... 449
Hari Narain Lal	... 15 8	„ „ „	... 445
Hari Mohan Jha	... 16 4	„ „ „	... 442½
Raghunandan Prasad	... 18 5	„ „ „	... 442
Syam Sundar Lal	... 18 2	„ „ „	... 441½
Jagannath Ram	... 17 8	„ „ „	... 440½
Nand Kisor Ray	... 15 8	„ „ „	... 439
Raghunandan Ray	... 18 4	„ „ „	... 430½
Rajendra Prasad Tewari	... 15 5	„ „ „	... 427½
Jay Govind Lal	... 16 4	„ „ „	... 423
Bal Mukund	... 14 5	„ „ „	... 421½
Ram Jug Ram	... 17 2	„ „ „	... 421
Raja Chaubey	... 15 2	„ „ „	... 420
Jhagru Misra	... 15 5	„ „ „	... 411
Siva Nandan Tewari	... 15 2	„ „ „	... 405½
Ram Subhag Ray	... 16 8	„ „ „	... 401½
Rajeswar Lal	... 15 8	„ „ „	... 401
Ram Kripal Pande	... 15 2	„ „ „	... 398
Govind Prasad Sinha	... 17 3	„ „ „	... 396
Mahammad Rafiq	... 17 8	„ „ „	... 385
Ram Govind Sinha	... 19 8	„ „ „	... 375½
Saraju Prasad Sinha	... 15 5	„ „ „	... 375
Dwarika Prasad Lal	... 17 5	„ „ „	... 371½

Low.

Siva Raj Sinha	... 15 8	Patna Training School	... 364
Braja Lal Misra	... 16 8	„ „ „	... 350
Chaturi Gop	... 14 5	„ „ „	... 344½
Har Govind Ray	... 17 4	„ „ „	... 340½
Chaturbhuj Sahai	... .	Guru, Shahabad	... 337
Parmeswar Tewari	... 15 8	Patna Training School	... 336½
Bikan Pande	... 14 5	„ „ „	... 317½
Raghubir Kumar	... .	Teacher, Seohar M. E. School, Muzaffarpur	... 280
Som Narain Misra	... .	2nd Pandit, Kurson M. V. School, Darbhanga	... 268½

DARJEELING,
The 23rd June 1902.

J. S. SLATER,
Offg. Director of Public Instruction, Bengal.

VERNACULAR MASTERSHIP EXAMINATION—CHOTA NAGPUR DIVISION, 1902.

THE undermentioned candidates have passed:—

[In order of merit.]

FIRST GRADE.

High.

No.	Name.	School.	Marks.
	Dhamesdhuri Ram	Ranchi Training School	421
	Anath Sahai	,, ,,	394
	Ram Nath Ram*	,, ,,	389
	Bishun Ram*	,, ,,	376
	Braj Mohan Ho	,, ,,	366

Medium.

	Sadasib Lal*	Ranchi Training School	333
	Dwarika Prasad	,, ,,	325

SECOND GRADE.

Medium.

	Dhuki Ram	Ranchi Training School	501
	Uday Nath Misir	,, ,,	498
	Paik Ray Ho	,, ,,	419
	Kisun Ram	,, ,,	418
	Dumari Khalifa	,, ,,	399

THIRD GRADE.

High.

	Sahdeo Ram	Ranchi Training School	502½

Medium.

	Nainsukh Tirkey	Ranchi Training School	489½
	Pitam Mewa	,, ,,	484
	Mahipal Ojha	,, ,,	477½
	Siti Kanta Ray	,, ,,	466
	Boas Serifa	,, ,,	460½
	Chhedi Singha	,, ,,	439

DARJEELING,
The 23rd June 1902.

J. S. SLATER,
Offg. Director of Public Instruction, Bengal.

* Entitled to Drawing Mastership certificates.

Subordinate Educational Service.

The 24th June 1902.—Babu Kesar Lal Saha, an Assistant Master of the Uttarpara Government School and now Officiating Sub-Inspector of Schools, Darjeeling Terai (officiating in class VIII), is confirmed in the latter appointment, with effect from the 1st July 1902, *vice* Babu Pran Krishna Banerjea, to retire from that date.

Babu Kesar Lal Saha is confirmed in class VIII with effect from the 1st July 1902 in the resulting vacancy consequent on the retirement of Babu Pran Krishna Banerjea.

Consequent on the confirmation of Babu Bhagabati Sahay, M.A., Deputy Inspector of Schools, Bhagalpur, and Officiating Head Master of the Patna Training School, in the latter appointment, the following officers of the Subordinate Educational Service are confirmed in the appointments mentioned opposite their names:—

(1)	Babu Annada Prasad Mittra, B.A. ...	Deputy Inspector of Schools, Bhagalpur.
(2)	,, Kalika Nanda Mukherjea ...	Deputy Inspector of Schools, Palamau.
(3)	,, Nalini Mohan Sanyal, M.A. ...	Ditto ditto, Hazaribagh.
(4)	,, Rajendra Nath Gangopadhyaya, B.A.	Head Master, Gaya Zilla School.
(5)	,, Jnanendra Lal Sen, B.A. ...	Ditto, Motihari Zilla School.
(6)	,, Mathura Prasad	Assistant Head Master, Arrah Zilla School.
(7)	,, Anukul Chandra Banerjea, M.A.	An Assistant Master, Arrah Zilla School, and in class VIII, in the resulting vacancy consequent on the appointment of Babu Bhagabati Sahay to class VII of the Provincial Educational Service.

A. PEDLER,
Director of Public Instruction, Bengal.

CIVIL ENGINEERING COLLEGE, SIBPUR.

AGRICULTURAL DEPARTMENT.

Higher Agricultural Class.

SESSION, 1902-1903.

Rules for Admission.

For admission to the Higher Agricultural Class, an applicant must have one of the following qualifications:—

(*i*) He must have passed the F. E. examination of the Calcutta University, and be under 23 years of age, but no student will be allowed to join the Agricultural Class after the expiration of five years from admission into the Engineering College.

(*ii*) He must have passed the B. A. examination of the Calcutta University by the B course, or possess other sufficient educational qualifications; be under 23 years of age, and, in addition, have received a nomination from the Bengal Government.

(*iii*) He must have had a general education qualifying him to follow the instruction in the Higher Agricultural Class, and must also receive a nomination from Government for admission as a special student. To be eligible for a nomination under this rule, a candidate must either have landed property of his own, or be recommended by some influential landholder who desires to train him to take part in the management of his estate, or he must otherwise satisfy Government that he intends to make practical use of his agricultural training. Students entering under this rule will be termed Special Agricultural Students. They will not be subject to any maximum limit of age, but will not be entitled to the privileges conferred on passed students under rules 12 and 13, even though they should obtain fully-signed diplomas in due course after passing the necessary examinations.

Every candidate for admission to this Department must apply in writing to the Principal not later than the 14th July. The form of application for a nomination, which must be addressed to the Principal, is given in Appendix B. In the event of the form not being properly filled up and accompanied by the necessary certificates, no notice will be taken of the application.

The number to be nominated will depend on the accommodation available.

Every applicant, not already a student of the College, must undergo a medical examination by the College Surgeon before admission to this Department. If this officer's report is unsatisfactory, the applicant will not be admitted.

Course of Instruction.

The course of instruction in the Higher Agricultural Class will extend over two academic years.

Scholarships.

Senior scholarships awarded in the Engineer Department are tenable in the Agricultural Department.

One graduate scholarship of Rs. 30 a month, tenable for one year, will be awarded on the result of the examination held at the end of the first academic year.

Appointments.

Two appointments annually are assigned to students holding a fully-signed diploma: one in the Provincial Executive Service and one in the Subordinate Executive Service. The right of selection for these appointments will rest with Government, and the students who gained the highest marks at the examination for diplomas will not necessarily be selected.

Other holders of fully-signed agricultural diplomas who wish to compete at the examination for admission to the Provincial, Subordinate Executive, and Opium Services may submit their names through the Principal to Government for nominations. These applications for nominations will be considered, provided the applicants appear to His Honour the Lieutenant-Governor to be otherwise suitable for admission to these services.

Entrance and Tuition Fees.

Each student in the Higher Agricultural Department will be required to pay an admission fee of Rs. 10, except such students as may wish to join after passing this year's F. E. examination.

For the present no tuition fees will be charged to students in the Agricultural Department, except in the case of those joining as special students under rule 3 (*iii*). The tuition fees for these students will be Rs. 8 a month.

Further particulars may be obtained free on application to the Principal.

Sibpur,
The 14th June 1902.

B. Heaton,
Offg. Principal, Civil Engineering College.

CHITTAGONG DIVISION.

Rules for the admission of Private Students to the University Examinations of 1903.

I.—ENTRANCE EXAMINATION.

1. A student who does not appear from any school, or who has been transferred since the 1st of September next preceding the examination, without the consent of an Inspector of Schools, to the school from which he appears, will be treated as a private student.

2. The term "private student" includes school-masters.

3. Private students are required to attend the test examination of one of the undermentioned high schools, on dates to be fixed by the Head-masters :—

(1) Comilla Zilla School.
(2) Brahmanbaria Annada High School.
(3) Chandpur High School.
(4) Noakhali Zilla School.
(5) Feni High School.
(6) Chittagong Collegiate School (with the Principal's permission).
(7) Chittagong Madrasa.
(8) Chittagong Municipal High School.
(9) Rangamati Government High English School.

4. Applications for permission to appear at the test examination should be made to the Inspector of Schools, and they must reach his office on or before the 15th November 1902.

5. Every private candidate shall state in his application whether he is an ordinary private candidate or a school-master, his age, residence and father's name, the school at which he desires to appear for the test examination and his postal address, which should be written legibly and distinctly, so that no mistake may be likely to occur.

6. A private candidate who is not a school-master should file with his application the Transfer Certificate (in original) granted him from the school in which he last studied; or, if he failed at a previous Entrance Examination and did not join a school afterwards, the Registrar's receipt (in original) for the fee paid; or he will furnish satisfactory proof that he has not failed at the test examination of any entrance school in the current session, and that he is of good moral character.

7. A school-master will have to file with his application a certificate from the Secretary or Proprietor of the school in which he is serving to the effect that he has been a *bonâ fide* paid teacher of the school since the 2nd June 1902. In case he has served in more than one school, he must produce certificates from the several schools of his having been a *bonâ fide* paid teacher all along since the 2nd June 1902.

8. If this office is satisfied that the necessary conditions have been fulfilled, the permission asked for will be granted and sent to the applicant, who must produce it before the Head-master of the school at which he desires to appear for the test examination.

9. A private candidate should be identified to the satisfaction of the officer conducting the test examination.

10. Each private student will pay a fee of Rs. 2 to the Head-master of the school at which he appears for the test examination. The fee is intended to meet the cost of the examination and charges for postage, &c.

11. The Head-master of each of the abovenamed schools is requested to direct the private candidates who may pass at the test examination from his school to appear before him on a fixed date, which should not be later then the 2nd January, and cause them to fill in the forms of application for admission to the Entrance Examination in his presence. He will then sign the certificates appended to the applications, and forward them to this office (in a registered cover, if sent by post) for countersignature. Under no circumstances should the entrance fee be sent to this office.

12. After countersignature the applications will be sent by the Inspector direct to the candidates, who must make their own arrangements for the transmission of their applications and fees to the Registrar of the Calcutta University, so as to be received at his office on or before the 22nd January 1903.

13. The Entrance Examination will be held on the 2nd March 1903 and following days.

II.—F.A. AND B.A. EXAMINATIONS.

1. Deputy Inspectors of Schools, Sub-Inspectors of Schools and *bonâ fide* masters of English schools, who have served as such for the full period of two academical years after passing the Entrance, will be admitted to the F.A. examination; and those who have served for the same period after passing the F.A. will be admitted to the B.A. Examination. Candidates who have failed in the F.A. or B.A. examination may be admitted to the same examination if they have served for a term of six months since the date of the last examination.

2. By *bonâ fide* masters of English schools are to be understood teachers who hold regularly paid appointments in recognised English schools teaching at least the Middle English course.

3. All applications from school-masters to the Inspector for permission to appear at the F.A. or B.A. examination should be accompanied by certificates of length of service (with dates) from the Secretaries of the schools in which they are employed, and should reach this office not later than the 5th January 1903.

4. The application of a school-master for admission to the F.A. or B.A. examination should be signed by him in the presence of the Secretary or a member of the Managing Committee of the school in which he is employed. It should then be forwarded to the Inspector for his signature, accompanied by (1) a certificate from the Secretary or a member of the Managing Committee to the effect that it has been signed by the candidate in his presence; (2) the University certificate of the candidate in proof of his having passed the Entrance or F A. examination, as the case may be; and (3) the Registrar's receipt to prove, if this be the case, that the candidate has appeared at the examination of any previous year. The B.A. candidates should also send in their Entrance pass certificates.

5. After signature by the Inspector, the application, together with the documents that accompanied it, will be returned to the candidate, who will have to send the application and the examination fee to the Registrar of the Calcutta University, so as to reach his office on or before the 2nd February 1903.

6. The F.A. and B.A. Examinations will be held on the 16th March 1903 and following days.

CHITTAGONG,
The 24th June 1902.

MUHAMMAD IBRAHIM,
Inspector of Schools, Chittagong Division.

HIGH COURT NOTICE.

Dates of the 4th and 5th Criminal Sessions for the year 1902.

No. of Sessions.	Day of the week.	Date.
Fourth Sessions	... Monday	... August 18th.
Fifth Do.	... Do.	... December 1st.

By order,
J. G. APCAR, *Clerk of the Crown.*

HIGH COURT, CROWN OFFICE, *the 25th day of June 1902.*

NOTIFICATIONS OF THE BOARD OF REVENUE.

No. 1716B.

NOTICE is hereby given that the Eighth Sale of Opium, the Provision of 1900-1901, will be held at the Government Opium Sale-room, No. 2 Bankshall Street, on Monday, the 4th August 1902, at 11 A.M., and will comprise 4,000 chests, viz:—

	Chests.
Opium manufactured at the Patna Factory, consisting of	2,000
Ditto ditto at the Ghazipur Factory, consisting of ...	2,000
Total ...	4,000

2nd.—The general conditions of the sale now advertised will be the same as usual. They may be ascertained by reference to the Notification issued on the 19th November 1901, and published in the *Government* and *Exchange Gazettes*, or on personal application at the Office of the Board of Revenue.

3rd.—The latest dates for deposit and clearance will be the 9th and 19th August 1902, respectively, that is to say, no Bank of Bengal Receipts, Government Promissory Notes, or other public securities that may be tendered for deposit in redemption of Promissory Notes given by purchasers in the sale-room will be received after 1-30 P.M. of Saturday, the 9th August 1902, and no Bank of Bengal Receipts in full payment of lots will be accepted after 3-30 P.M. of Tuesday, the 19th August 1902.

4th.—In addition to the quantity above advertised for sale, the following quantities, more or less, of the opium manufactured at the Patna and Ghazipur Factories will be brought to sale down to December next, on or about the dates specified below. The Board of

Revenue, however, reserve to themselves the right of altering these dates, should circumstances render it expedient to do so:—

Dates.	Manufactured at the Patna Factory; about chests.	Manufactured at the Ghazipur Factory; about chests.	Total; about chests.
On or about Monday, 1st September 1902 ...	2,000	2,000	4,000
On or about Monday, 29th September ,, ...	2,000	2,000	4,000
On or about Monday, 3rd November ,, ...	2,000	2,000	4,000
On or about Monday, 1st December ,, ...	2,000	2,000	4,000
Total ...	8,000	8,000	16,000

By order of the Board of Revenue, L. P.,

H. WHEELER, *Secretary.*

BOARD OF REVENUE, L. P., CALCUTTA, *the 1st July 1902.*

No. 1392B.

NOTICE is hereby given that the Seventh Sale of Opium, the Provision of 1900-1901, will be held at the Government Opium Sale-room, No. 2 Bankshall Street, on Wednesday, the 2nd July 1902, at 11 A.M., and will comprise 4,000 chests, viz.—

	Chests.
Opium manufactured at the Patna Factory, consisting of ...	2,000
Opium manufactured at the Ghazipur Factory, consisting of ...	2,000
Total ...	4,000

2nd.—The general conditions of the sale now advertised will be the same as usual. They may be ascertained by reference to the Notification issued on the 19th November 1901, and published in the *Government* and *Exchange Gazettes*, or on personal application at the office of the Board of Revenue.

3rd.—The latest dates for deposit and clearance will be the 7th and 17th July 1902 respectively, that is to say, no Bank of Bengal Receipts, Government Promissory Notes or other Public Securities that may be tendered for deposit in redemption of Promissory Notes given by purchasers in the sale-room will be received after 3-30 P.M. of Monday, the 7th July 1902, and no Bank of Bengal Receipts in full payment of lots will be accepted after 3-30 P.M. of Thursday, the 17th July 1902.

4th.—In addition to the quantity above advertised for sale, the following quantities, more or less, of the Opium manufactured at the Patna and Ghazipur Factories will be brought to sale down to December next on or about the dates specified below. The Board of Revenue, however, reserve to themselves the right of altering these dates, should circumstances render it expedient to do so:—

Dates.	Manufactured at the Patna Factory; about chests.	Manufactured at the Ghazipur Factory; about chests.	Total; about chests
On or about Monday, 4th August 1902 ...	2,000	2,000	4,000
On or about Monday, 1st September ,, ...	2,000	2,000	4,000
On or about Monday, 29th September ,, ...	2,000	2,000	4,000
On or about Monday, 3rd November ,, ...	2,000	2,000	4,000
On or about Monday, 1st December ,, ...	2,000	2,000	4,000
Total ...	10,000	10,000	20,000

By order of the Board of Revenue, L. P.,

H. WHEELER, *Offg. Secretary.*

BOARD OF REVENUE, L. P., CALCUTTA, *the 27th May 1902.*

NOTIFICATION.

IT is hereby notified for general information that at a bye-election held on Monday, the 26th May 1902, in Ward No III of the Deoghur Municipality, in the district of the Sonthal Parganas, Babu Suraj Mall Marwari, merchant and money-lender, was duly elected to be a Commissioner for that Ward in place of Babu Madon Gopal Singh, removed from the office of Municipal Commissioner under section 20 (*c*) of the Bengal Municipal Act, III of 1884, as modified up to 1st November 1896.

H. C. WILLIAMS, *Commissioner.*

COMMR.'S OFFICE, BHAGALPUR, *the 17th June 1902.*

NOTIFICATION.

IT is hereby notified for general information, under Rule 26 of the Election Rules, that in the bye-election held in Ward No. IV of the Puri Municipality, Babu Maguni Das was duly elected as a Commissioner in place of Babu Madhu Sudan Mahanty, resigned.

K. G. GUPTA, *Commissioner.*

ORISSA COMMR.'S OFFICE, CUTTACK, *the 21st June 1902.*

NOTIFICATION.

IT is hereby notified for general information that at a bye-election held on Saturday, the 14th June 1902, in Ward No. I of the Jessore Municipality, in the district of Jessore, Babu Rajendra Lal Bose was duly elected to be a Commissioner for that Ward in the place of Babu Sukhamoy Das Gupta, removed from the Municipal Board under section 20 (1) (*c*) of the Bengal Municipal Act as amended.

CHANDI DAS GHOSE, for *Commissioner on tour.*

COMMR.'S OFFICE, PRESY. DIVN., CALCUTTA, *the 28th June 1902.*

NOTIFICATION.

IT is hereby notified for general information that a bye-election will be held on Saturday, the 16th August 1902, in Ward No. II of the Rajpur Municipality, in the district of the 24-Parganas, to elect a Commissioner for that Ward in the place of Babu Kishori Lal Gosh, resigned.

CHANDI DAS GHOSE, for *Commissioner on tour.*

COMMR.'S OFFICE, PRESY. DIVN., CALCUTTA, *the 28th June 1902.*

NOTIFICATION.

IT is hereby notified for general information that the third general election of Commissioners will be held on Monday, the 22nd September 1902, in the several wards of the Azimganj Municipality, in the district of Murshidabad, as noted below, in the place of those who, having been elected at the second general election held in July 1899 or subsequently thereto, in place of Commissioners so elected, complete their term of office under sections 21 and 27 of the Bengal Municipal Act as amended up to 1st November 1896 :—

No. of ward.	Name of ward.			Number of Commissioners to be elected.
I	Baluchar	...	...	4
II	Manullabazar	...	...	2
III	Azimganj	...	...	4

CHANDI DAS GHOSE, *Persnl. Asstt.*, for *Commr.*

COMMR.'S OFFICE, PRESY. DIVN., CALCUTTA, *the 1st July 1902.*

NOTIFICATION.

IT is hereby notified for general information that at a bye-election held on Saturday, the 21st June 1902, in Ward No. I of the Santipur Municipality, in the district of Nadia, Babu Manaranjan Bagchi, B A., was duly elected to be a Commissioner for that ward in the place of Babu Moti Lal Moitra, deceased.

CHANDI DAS GHOSE, *Persnl. Asstt.*, for *Commr.*

COMMR.'S OFFICE, PRESY. DIVN., CALCUTTA, *the 1st July 1902.*

NOTIFICATION.

IT is hereby notified, under Rule 21 (*b*) of the Dispensary Manual, that the following gentlemen have been appointed members of the Committee for the management of the Tarash Charitable Dispensary, in the district of Pabna:—

1. Babu Purna Chandra Goswami.
2. „ Trailokhaya Nath Sanyal.
3. „ Krishna Kumar Baksi.
4. „ Mohesh Chandra Baishnab.
5. Babu Nil Kanta Lahiri.
6. „ Rajani Kanta Chakravarty.
7. „ Ananda Chander Sarkar.
8. The Sub-Inspector in charge of Tarash outpost, *ex-officio*.

C. R. MARINDIN, *Commissioner, Rajshahi Division.*

DARJEELING, *the 23rd June 1902.*

NOTIFICATION.

IT is hereby notified for general information that the undermentioned gentlemen have been appointed, under rule 21 (*b*) of the rules for the management of the Charitable Hospitals and Dispensaries in Bengal, to be members of the Committee for the management of the Barabazar Dispensary, in the district of Manbhum:—

Babu Dwarka Nath Chatterjee, Sub-Registrar ...
„ Nakul Kishore Roy, Senior Sub-Inspector of Police ...
„ Nando Lal Roy, Junior Sub-Inspector of Police ...
„ Akhil Chandra Sen, ...
„ Braja Nath Koyri, } Mr. Mathewson's amlas ...
„ Jibon Krishna Mukherjee, } ...
„ Goyaram Sen, the Barabhum Zamindar's amla ...
„ Hazari Mull Marwari, Merchant ... ...
„ Chandi Charan Singh Modak, shopkeeper ... ...
„ Subol Singh, ...

} *Members.*

KRISHNAKALI MUKHARJI, *Persl. Asst.*, for *Offg. Commr.*

RANCHI, *the 24th June 1902.*

NOTIFICATION.

UNDER Rule 21 (*b*) of the Dispensary Manual, it is notified for general information that Babu Atul Chandra Banerjee has been appointed to be a member of the Committee of Management of the Duke Charitable Dispensary at Singti, in the district of Howrah, *vice* Munshi Muhammad Ali, deceased.

R. CARSTAIRS, *Commissioner.*

COMMR.'S OFFICE, BURDWAN DIVN., CHINSURA, *the 27th June 1902.*

The Calcutta Gazette.

WEDNESDAY, JULY 2, 1902.

PART IA.

Orders and Notifications by the Government of India, &c.

[*Reprinted from the "Gazette of India."*]

KAISAR-I-HIND MEDAL.

NOTIFICATION.

Simla, the 26th June 1902.

No. 1987.—His Excellency the Viceroy and Governor-General of India is pleased to announce that His Majesty the King, Emperor of India, has been graciously pleased to award the Kaisar-i-Hind Medal for Public Service in India of the First Class to—

* * * * *

Charles Evelyn Arbuthnot William Oldham, Esquire, Indian Civil Service, Magistrate and Collector, Gaya, Bengal.

* * * * *

His Excellency the Viceroy and Governor-General is pleased to award the Kaisar-i-Hind Medal for Public Service in India of the Second Class to—

* * * * *

Khan Bahadur Kazi Farzand Ahmed, Honorary Magistrate, Gaya, Bengal.

* * * * *

Captain Ralph Henry Maddox, M.B., Indian Medical Service, Superintendent, Presidency Jail, Calcutta, Bengal.

* * * * *

Joseph Samuels, Esquire, lately District Superintendent of Police, Howrah (now retired), Bengal.

* * * * *

J. P. HEWETT,
Secy. to the Govt. of India, Home Dept.

The following orders, issued by the Government of India in the Home Department, are republished for general information.

C. E. BUCKLAND,
Chief Secy. to the Govt. of Bengal.

NOTIFICATIONS.

SANITARY.

Simla, the 27th June 1902.

* * * *

No. 1588.—Major H. J. Dyson, F.R.C.S., Indian Medical Service (Bengal), Sanitary Commissioner for Bengal, is granted privilege leave for three months with furlough out of India for one year and nine months in continuation, with effect from the 1st July 1902.

No. 1589.—Captain B. H. Deare, Indian Medical Service (Bengal), is appointed to officiate as Sanitary Commissioner, Bengal, during the absence, on leave, of Major H. J. Dyson, F.R.C.S., Indian Medical Service (Bengal), or until further orders.

ECCLESIASTICAL.

The 27th June 1902.

No. 259.—The following programme of the proposed visitation tour of the Most Reverend the Lord Bishop of Calcutta and Metropolitan in India and Ceylon is published for general information:

Station.	Arrival.	Departure.	REMARKS.
Darjeeling ...	.....	Saturday, July 12th	
Kurseong ...	Saturday, July 12th	Monday, „ 14th	
Jalpaiguri ...	Monday, „ 14th	Tuesday, „ 15th	
Calcutta ...	Wednesday, „ 16th	Saturday, „ 19th	
Midnapore ...	Saturday, „ 19th	Wednesday, „ 23rd	Visiting Khargpur.
Balasore ...	Wednesday, „ 23rd	Friday, „ 25th	
Cuttack ...	Friday, „ 25th	Monday, „ 28th	
Khurda road ...	Monday, „ 28th	Tuesday, „ 29th	
Puri ...	Tuesday, „ 29th	Friday, August 1st	
Berhampur (Ganjam)	Friday, August 1st	Monday, „ 4th	
Calcutta ...	Tuesday, „ 5th	... ..	Returning to Darjeeling before the end of August.

J. P. HEWETT,
Secy to the Govt of India.

STAR OF INDIA.

NOTIFICATION.

Simla, the 26th June 1902.

No. 26-S.-I.—His Excellency the Grand Master of the Most Exalted Order of the Star of India is pleased to announce that His Majesty the King, Emperor of India, has been graciously pleased to make the following appointments to the said Order:

To be Knights Commanders.

* * * * *

The Honourable Mr. Henry John Stedman Cotton, C.S.I., Indian Civil Service, Chief Commissioner of Assam.

* * * * *

By order of the Grand Master,

H. S. BARNES,
Secy. to the Most Exalted
Order of the Star of India.

INDIAN EMPIRE.

NOTIFICATION.

Simla, the 26th June 1902.

No. 52-I.-E.—His Excellency the Grand Master of the Most Eminent Order of the Indian Empire is pleased to announce that His Majesty the King, Emperor of India, has been graciously pleased to make the following appointments to the said Order:

* * * * *

To be Knights Commanders.

* * * * *

The Honourable Maharaja Rameshwara Singh Bahadur of Darbhanga, an Additional Member of the Council of the Governor-General for making Laws and Regulations.

* * * *

To be Companions.

Alexander Porteous, Esquire, Indian Civil Service, Officiating Judge and Commissioner of the Assam Valley Districts.

Babu Nalin Bihari Sircar, a Commissioner for the Port of Calcutta.

By order of the Grand Master,
H. S. BARNES,
Secy. to the Most Eminent
Order of the Indian Empire.

FOREIGN DEPARTMENT.

NOTIFICATIONS.

Simla, the 26th June 1902.

No. 2565-I.A.—His Excellency the Viceroy and Governor-General is pleased to confer upon Pandit Raja Krishna Tarkapanchana, of Navadwipa, Nadia, in the Bengal Presidency, the title of Mahamahopadhyaya as a personal distinction.

No. 2566-I.A.—His Excellency the Viceroy and Governor-General is pleased to confer upon Babu Rameswar Malia, of Howrah and Searsole, in the Bengal Presidency, the title of Kumar as a personal distinction.

No. 2568-I.A.—His Excellency the Viceroy and Governor-General is pleased to confer the title of Khan Bahadur as a personal distinction upon—

The Hon'ble Maulvi Syed Mahomed, Deputy Magistrate and Deputy Collector of Howrah, in the Bengal Presidency.

No. 2570-I.A.—His Excellency the Viceroy and Governor-General is pleased to confer the title of Rai Bahadur as a personal distinction upon—

Babu Upendra Chandra Mullick, late Subordinate Judge, Patna, in the Bengal Presidency.

Babu Takanath Singh, of Barhee, Monghyr, in the Bengal Presidency.

Babu Autul Chandra Chatterjee, Deputy Magistrate and Deputy Collector of Howrah, in the Bengal Presidency.

Babu Jadu Nath Mozumdar, Chairman of the Jessore Municipality, in the Bengal Presidency.

H. S. BARNES,
Secy. to the Govt. of India.

The following orders, issued by the Government of India in the Military Department, are republished for general information.

C. E. BUCKLAND,
Chief Secy. to the Govt. of Bengal

Simla, the 27th June 1902.

LONDON GAZETTE.

No. 587.—The following extract is published for general information:

"*London Gazette*," *dated the 3rd June 1902, pages 3607 and 3609.*

WAR OFFICE;
Pall Mall, 3rd June 1902.

MEMORANDA.

Maharaj Kumar Raj Rajendra Narayan of Cooch Behar is granted the honorary rank of Lieutenant in the Army. Dated 4th June 1902.

RETIREMENTS.

No. 596.—Lieutenant-Colonel Edward Mair, M.B., Indian Medical Service (Bengal), Inspector-General of Prisons, Bengal, is permitted to retire from the service, with effect from the 3rd July 1902, subject to His Majesty's approval.

No. 598.—Lieutenant-Colonel Dharma Das Basu, Indian Medical Service (Bengal), Civil Surgeon, Bengal, is permitted to retire from the service, with effect from the 7th July 1902, subject to His Majesty's approval.

E. G. BARROW, *Major-General,*
Secy. to the Govt. of India.

The Calcutta Gazette.

WEDNESDAY, JULY 2, 1902.

PART IB.

MUNICIPAL AND LOCAL.

NOTIFICATION.

No. 1052T.M.—The 21st June 1902.—It is hereby notified for general information that, under rule 32 of the rules framed under clause (*a*), section 138 of the Bengal Local Self-Government Act, III of 1885, the Lieutenant-Governor is pleased, in modification of Government Notification No. 1402L.S.-G., dated the 25th March 1902, published at page 69, Part IB of the *Calcutta Gazette* of the 26th March 1902, to fix the 25th July 1902 as the date for the election of members to represent Magura thana, including Sripur outpost, on the Magura Local Board, in the district of Jessore.

Jessore.

E. W. COLLIN,
Offg. Secy. to the Govt. of Bengal.

NOTIFICATION.

No. 1057T.M.—The 21st June 1902.—It is hereby notified for general information that, under section 6 (*b*) of the Bengal Ferries Act, I of 1885, the Lieutenant-Governor is pleased to take possession of the Mudiakhal private ferry on the Benodepur-Mahamedpur road, in the Magura subdivision of the district of Jessore, and to declare it to be a public ferry.

Jessore.

2. The Lieutenant-Governor is also pleased, in exercise of the powers conferred on him by section 35 of the aforesaid Act, to direct that the said ferry shall be managed by the District Board of Jessore, and that all the proceeds of the said ferry, and all the fines levied and compensation received under the said Act in respect thereof, shall be paid into the District Fund, with effect from the date of this notification.

E. W. COLLIN,
Offg. Secy. to the Govt. of Bengal.

NOTIFICATION.

No. 1075T.M.—The 24th June 1902.—It is hereby notified that, under section 19 of the Bengal Local Self-Government Act, III of 1885, the Lieutenant-Governor is pleased to appoint Babu Tarak Nath Deb to be a member of the Madhubani Local Board, in the district of Darbhanga, *vice* Babu Rajani Kanta Dass Gupta, resigned.

Darbhanga.

E. W. COLLIN,
Offg. Secy. to the Govt. of Bengal.

NOTIFICATION.

No. 1079T.M.—The 24th June 1902.—It is hereby notified that the members of the Kishenganj Local Board, in the district of Purnea, having at a meeting, under section 25 of the Bengal Local Self-Government Act, III of 1885, requested the Lieutenant-Governor to appoint a Chairman, the Lieutenant-Governor is pleased, under sections 25 and 29 of the Act, to appoint Mr. J. Byrne to be the Chairman of that Local Board, *vice* Mr. J. Hezlett, resigned.

Purnea.

E. W. COLLIN,
Offg. Secy. to the Govt. of Bengal.

NOTIFICATION.

No. 1083T.M.—The 24th June 1902.—It is hereby notified for general information that, under rule 32 of the rules framed under section 138 (*a*) of the Bengal Local Self-Government Act, III of 1885, the Lieutenant-Governor is pleased to fix Tuesday, the 9th September 1902, as the date for holding an election, under section 19 of the Act, in thana Labpore, in the district of Birbhum, for the purpose of filling the vacancy in the representation of that thana on the Local Board of Suri caused by the resignation of Babu Abinash Chandra Banerjee.

Birbhum.

E. W. COLLIN,
Offg. Secy. to the Govt. of Bengal.

NOTIFICATION.

No. 1087T.M.—The 25th June 1902.—It is hereby notified that, under section 59 of the Bengal Municipal Act, III of 1884, as modified up to 1st November 1896, the Lieutenant-Governor approves the election by the Commissioners of the Jamalpur Municipality, in the district of Monghyr, of Mr. A. S. Bailey to be their Chairman, *vice* Mr. T. R. Browne, resigned.

Monghyr.

E. W. COLLIN,
Offg. Secy. to the Govt. of Bengal.

NOTIFICATION.

No. 1093T.M.—The 26th June 1902.—It is hereby notified that, under section 27 of the Bengal Municipal Act, III of 1884, as modified up to 1st November 1896, the Lieutenant-Governor is pleased to appoint Babu Phanindra Nath Mukherjee to be a Commissioner of the Faridpur Municipality, in the district of Faridpur, *vice* Maulvi Mohamed Eskander Ali, resigned.

Faridpur.

E. W. COLLIN,
Offg. Secy. to the Govt. of Bengal.

NOTIFICATION.

No. 1140T.M.—The 28th June 1902.—It is hereby notified that the Lieutenant-Governor is pleased to approve the election by the members of the Goalundo Local Board, in the district of Faridpur, under section 25 of the Bengal Local Self-Government Act, III of 1885, of Babu Baroda Kanta Gangooly to be their Chairman.

Faridpur.

E. W. COLLIN,
Offg. Secy. to the Govt. of Bengal.

NOTIFICATION.

No. 1142T.M.—The 28th June 1902.—It is hereby notified that the Lieutenant-Governor is pleased to approve the election by the members of the Madaripur Local Board, in the district of Faridpur, under section 25 of the Bengal Local Self-Government Act, III of 1885, of Babu Haris Chunder Rai to be their Chairman.

Faridpur.

E. W. COLLIN,
Offg. Secy. to the Govt. of Bengal.

NOTIFICATION.

No. 1144T.M.—The 28th June 1902.—It is hereby notified that the Lieutenant-Governor is pleased to approve the election by the members of the Sadar Local Board, in the district of Faridpur, under section 25 of the Bengal Local Self-Government Act, III of 1885, of Babu Prasanna Kumar Roy to be their Chairman.

Faridpur.

E. W. COLLIN,
Offg. Secy. to the Govt. of Bengal.

NOTIFICATION.

No. 1159T.M.—The 30th June 1902.—It is hereby notified that, under section 14 of the Bengal Municipal Act, III of 1884, as modified up to 1st November 1896, the Lieutenant-Governor is pleased to appoint the following gentlemen to be Commissioners of the Kishanganj Municipality, in the district of Purnea :—

Purnea.

The Sub-Deputy Magistrate of Kishanganj, *ex-officio.*
Babu Adhar Chandra Mittra.
„ Rakhal Das Tarafdar.
Maulvi Wazul Haq.

The Lieutenant-Governor is pleased to appoint, under section 16 of the Act, Babu Girdhari Lal to be a Commissioner of the said Municipality.

E. W. COLLIN,
Offg. Secy. to the Govt. of Bengal.

NOTIFICATION.

No. 1161T.M.—The 30th June 1902.—It is hereby notified that, under section 11 of the Bengal Local Self-Government Act, III of 1885, the Lieutenant-Governor is pleased to appoint the following gentlemen to be members of the several Local Boards in the district of Khulna :—

Khulna.

Local Boards.	Names of members.
Khulna ...	Babu Jadu Nath Sen. „ Kedar Nath Ghose. „ Hari Mohan Sen. „ Debendra Nath Ghose.
Bagerhat ...	Babu Chandi Charan Roy. Munshi Mahammad Rasek. Babu Ram Taran Nag. „ Behari Lal Guha Roy.
Satkhira ...	Babu Jagat Chandra Bose, Subdivisional Officer. Dr. Abdul Wajed Khan Chaudhuri. Babu Sri Nath Chatterjee. „ Sailendra Bandhu Roy. „ Patit Paban Roy.

2. The Lieutenant-Governor is also pleased to appoint the following gentlemen, under section 10 of the Act, to be members of the Local Boards mentioned against their names in the above district :—

Local Boards.	Names of members.
Khulna ..	Babu Kunja Behari Chakraburtty. „ Ras Behari Sen. Munshi Ali Hyder. „ Mahamed Ibrahim. Babu Debendra Nath Bhattacharjee. „ Hemanta Kumar Haldar. Munshi Taher Sardar.
Bagerhat ...	Babu Kalidas Mookerjee, Subdivisional Officer. „ Bepin Behari Basu. Kazi Safiuddin Ahmad. Babu Naba Kumar Kar. „ Basanta Kumar Chakraburtty.
Satkhira ...	Munshi Deldar Ahmed Chaudhury. Khan Bahadur Golam Quasem. Babu Hari Nath Majumdar. Hazi Tofazzal Hosen. Babu Girija Nath Roy Chaudhuri. „ Lakshman Chandra Roy. „ Trailakhsha Nath Mukerjee.

E. W. COLLIN,
Offg. Secy. to the Govt. of Bengal.

DECLARATION.

No. 1136 T.M.—The 28th June 1902.—Whereas it appears to the Lieutenant-Governor of Bengal that land is required to be taken up by Government at the expense of the South Suburban Municipality for a public purpose,

24-Parganas.

viz., for a hackney carriage stand at Borisa Sakher Bazar in the village of Borisa, Pargana Magurah, district 24-Parganas, it is hereby declared that for the above purpose a piece of land measuring, more or less, 2 cottahs and 11 square feet of standard measurement, is required. The land is bounded on the north partly by land and building of Matilall Gupta, and partly by garden of Horish Chandra Roy Chowdhury ; on the east by garden of Horish Chandra Roy Chowdhury ; on the south by municipal drain and surplus land of Old Tallygunge Road, and on the west by Diamond Harbour Road.

The plan of the land may be inspected in the office of the South Suburban Municipality.

This declaration is made, under the provisions of section 6 of Act I of 1894, to all whom it may concern.

E. W. COLLIN,
Offg. Secy. to the Govt. of Bengal.

DECLARATION.

No. 1146T.M.—The 28th June 1902.—Whereas it appears to the Lieutenant-Governor of Bengal that land is required to be taken up by Government at the expense of the South Suburban Municipality for a public purpose, viz., for a burial-ground at Gholaghat, near Jinjirpole, in the village of Nuskerpore, Pargana Belia, district 24-Parganas, it is hereby declared that for the above purpose a piece of land measuring, more of less, 4 bighas 2 cottas and 1 chittack of standard measurement is required. The land is bounded on the north by remaining portion of the paddy-field of Mahesh Moochi and the present Gholaghat burial-ground; on the east by the remaining portion of the paddy-fields of Mahesh Moochi, Nootbihary Banerjee, Kamal Haldar, Purna Chandra Banerjee, and Bama Charan Roy; on the south by the paddy-field of Bama Charan Roy and Kamal Haldar; and on the west by the remaining portion of paddy-field of Kamal Haldar, Nootbihary Banerjee, and Mahesh Moochi and Debendra Nath Mondle.

24-Parganas.

The plan of the land may be inspected in the office of the South Suburban Municipality.

This declaration is made, under the provisions of section 6 of Act I of 1894, to all whom it may concern.

E. W. COLLIN,
Offg. Secy. to the Govt. of Bengal.

DECLARATION.

No. 1155T.M.—The 30th June 1902.—Whereas it appears to the Lieutenant-Governor of Bengal that land is required to be taken up by Government at the expense of the South Suburban Municipality for a public purpose, viz, for a new road leading from Old Tallygunge Road to Shiriti burning ghat, in the village of Shiriti, Old Tallygunge, pargana Magura, zilla 24-Parganas, it is hereby declared that for the above purpose a piece of land measuring, more or less, 6 cottahs 6 chitaks of standard measurement, is required. The land is bounded on the north by land of Sabornos of Borisha; on the east by Shiriti burning ghat; on the south by land of Brojendra Nath and Krista Prasanna Mandal and Sabornos of Borisha; and on the west by Old Tallygunge Road.

24-Parganas.

A plan of the land may be inspected in the office of the South Suburban Municipality.

This declaration is made, under the provisions of section 6 of Act I of 1894, to all whom it may concern.

E. W. COLLIN,
Offg. Secy. to the Govt. of Bengal.

The Calcutta Gazette.

WEDNESDAY, JULY 2, 1902.

PART II.

Advertisements.

[N. B.—Advertisements, Notices, &c., intended for insertion in this part of the Gazette cannot be received after Noon on Monday.]

LAND SALE NOTICES.

Notice of Sale for Arrears of Revenue.

NOTICE is hereby given, under section VI, Act XI of 1859, read with Act VII (B.C.) of 1868 and Act II (B.C.) of 1871, that the undermentioned Noabad taluks in the district of Chittagong will be put up to public and unreserved sale at the Collector's office of that district on the 11th day of July 1902 for arrears and cesses remaining unpaid on the 25th day of May 1902:—

Serial No.	No of tenure.	Name of tenure with its situation.	Name of proprietor.	Annual Jama.		Amount of arrears for which the tenure is to be sold.		
				Rent.	Cesses.	Rent.	Cesses.	Total.
1	2	3	4	5	6	7	8	9
				Rs. A. P.	Rs. A. P.	Rs. A. P.	Rs. A. P.	Rs. A. P.
1	31 / 1823	Thana Banskhali, mauza Nakora, mahal Noabad Hal, taluk Raj Kumar Rai.	Mohesh Chandra Bhattacharji	1,139 0 0	127 0 6	427 2 0	47 10 0	474 12 6
2	17 / 430 / dr.	Thana Banskhali, mauza Chambal, mahal Noabad, taluk Tajannissa.	Fazar Ali Chowdhuri ...	1,954 4 0	161 9 6	732 14 0	60 9 6	793 7 6
3	5300 / 4566	Thana Satkania, mauza Churamoni, mahal Noabad, taluk Mohesh Chandra and Chaitanya Charan.	Rai Kailas Chandra Das, general manager on behalf of estate Surendra, Bijoy and Raj Chandra Sen and others.	511 14 0	7 7 0	47 7 0	.....	47 0
4	5674 / 5069	Thana Satkania, mauza Pahar Chanda, mahal Noabad, taluk Nilmani, Ishan Chandra and Bhasti Charan.	Rai Kailas Ch. Das Bahadur, general manager on behalf of estate Abdul Fattah Khan and Upendra Chandra Bhattacharji and others.	651 10 0	50 9 0	124 12 8	7 7 8	132 4 4
5	6839 / 5617	Thana Satkania, mauza Charamba, mahal Noabad, taluk Kali Kinkar, Kashi, Upendra Das, Hori, Ishan, Debi Das and Ram Sharan.	Koilas Chandra, Purna Chandra Choudhuri and others.	1,086 14 0	77 10 0	743 5 9	29 3 0	772 7 0

Chittagong, the 7th June 1902.

A. H. VERNEDE, Covtd. Depy. Collector, *for* Collector.

Notification B.

NOTICE is hereby given, under sections 5 and 13, Act XI of 1859, that unless the arrears mentioned below are paid on or before the next latest date of payment, viz., the 28th June 1902, the undermentioned estates or shares of estates in the district of Tippera will be put up for sale at the office of the Collector of that district on the 26th September 1902 at 12 o'clock for the said arrears.

When in columns 5, 7 and 9 of the appended statement it is stated that only a share is to be sold, it is to be understood that a separate account is kept for that share.

Tauzi No.	Name of mahal and pargana.	Sadar jama of whole estate.	Whether the whole estate is to be sold.	If only a share is to be sold, specification of such share or shares.	Names of proprietors of property to be sold.	If only a share is to be sold, the sadar jama of such share.	If the whole estate is to be sold, the arrears due from it.	If only a share is to be sold, the arrears due from it.	Arrears and amount of demand for which to be sold.
1	2	3	4	5	6	7	8	9	10
		Rs. A. P.				Rs. A. P.	Rs. A. P.	Rs. A. P.	Rs. A. P.
1925	Pargana Uttar Sahapur char near Nagarer Kandi, No. 211.	1,296 10 9	Whole ...	.....	Ishan Chandra Datta and others.	....	202 9 4	.....	202 9 4

Tippera Collectorate the 29th May 1902.

H. W. SCROOPE, Offg. Collector.

Notice of Sale for Arrears of Revenue.

NOTICE is hereby given, under section VI, Act XI of 1859, read with Act VII (B.C.) of 1868 and Act II (B.C.) of 1871, that the undermentioned Noabad taluks of the Cox's Bazar khas mahal, in the district of Chittagong, will be put up to public and unreserved sale at the Collector's office of that district on the 11th day of July 1902 for arrears and cesses remaining unpaid on the 26th day of May 1902 :—

Serial No.	No. of tenure.	Name of mauza, thana and mahal.	Name of Talukdar.	SADAR JAMA.		AMOUNT OF ARREAR FOR WHICH THE TENURE IS TO BE SOLD.		
				Rent.	Cesses.	Rent.	Cesses.	Total.
1	2	3	4	5	6	7	8	9
				Rs. A. P.	Rs. A. P.	Rs. A. P.	Rs. A. P.	Rs. A. P.
1	4 460/660/876	Thana Teknaf, mauza South Nhila, taluk Ishan Chandra Chowdhuri.	Mongjai Chowdhuri, Keojai Chowdhuri, sons of Rapho Chowdhuri, of South Nhila.	1,082 6 0	185 8 6	300 4 0	61 13 6	362 1 6
2	5—1036	Thana Teknaf, mauza South Nhila, taluk Khoama Aungjai and Keojai Chowdhuri,	Fateh Chowdhuri, Rapasi Chowdhuri and Aunglapa Chowdhuri, sons of Khangsa Chowdhuri, Mongjai Chowdhuri, Kookhai Chowdhuri, sons of Rapho Chowdhuri, Mongla-frue Chowdhuri, Ori Chowdhuri, Katubi Chaudhuri, Chailapo Chowdhuri, Khama Chowdhuri and Momfrue Chowdhuri, sons of Angjai Chowdhuri, and Laturi, son of Angia Chowdhuri, of South Nhila.	1,621 8 0	70 15 6	264 0 0	23 11 0	287 11 0
3	29 17/19	Thana Teknaf, mauza Haladia Palong, taluk Hari Jugal.	Umatara, wife of Gopi Mohan Sen, of Sonaiah.	890 10 0	298 1 6	338 14 0	99 6 2	433
4	90—122	Thana Ramu, mauza Khurulia, taluk Buksha Ali.	General Manager, Court of Wards, on behalf of the estate of Mohobut Ali Chowdhuri.	688 9 0	93 8 6	2,554 4 0	370 [illegible] 0	2,924
5	119—153	Thana Ramu, mauza Aconacharl, taluk Gouri Sankar, Badya Nath Kanungoe.	Golam Bari, Golam Kobria Chowdhuri, Golam Akbar Chowdhuri, Srimoti Balkis Bibi, Fulchara Bibi, Chanubal Bibi, Nabkis Bibi, sons and daughters of Maulvi Nazir Ali Chowdhuri, of Uttar Mithachery.	503 1 9	73 11 6	222 5 9	24 9 3	246 15 [illegible]
6	126—163	Thana Ramu, mauza Uttar Mithacherry.	Asanulla, son of Jinnat Ali, of Joaria Nallah.	1,071 4 0	122 1 0	401 12 0	40 11 0	442 7 0
7	165—217	Thana Ramu, mauza Kachapia, taluk Rustamali.	Kojafrue Chowdhuri, Satoalfrue Chowdhuri, sons of Angafrue Chowdhuri, of Bandarban.	1,596 8 0	238 11 6	474 8 0	79 9 3	554 1 [illegible]
8	166—218	Thana Ramu, mauza Kachapia, taluk Pachkori.	Alimuddin Chowdhuri, son of Pachkori Chowdhuri, Magbul Ali, Esad Ali, Ekbol Ali, Chunnu Mia, sons of Alimuddin Chowdhuri, of Uttar Mithachery.	1,837 8 0	142 2 0	201 0 0	.....	261 0 0
9	217—34902	Thana Ramu, mauza Garjania, taluk Pachkori.	Kojafrue Chowdhuri, Satoalfrue Chowdhuri, Koingafrue Chowdhuri, sons of Angafrue Chowdhuri, of Bandarban.	1,720 0 0	.....	645 0 0	.....	645 0 0
10	246 219/249	Thana Chakaria, mauza Manikpur, taluk Tollafrue.	Dinandra Kumari, wife of Jagabondhu Pal, of Adhunagor.	636 0 0	110 [illegible] 6	280 [illegible] 0	36 13 0	276 1 [illegible]
11	279 274/365	Thana Chakaria, mauza Bheola Manikchar, taluk Bibi Isprak.	Asmat Ali and Jaha Baksha, sons of Magon Ali, of Herina.	1,630 0 0	168 9 0	577 2 0	66 3 6	633 5 6
12	286 282/295/330	Thana Chakaria, mauza Paharchandu, taluk Bibi Isprak.	Durga Kripa Sen, Kali Prasanno Sen, of Gusra, Beni Madhav Sen, son of Braja Mohan Sen, Kashishwari, wife of Ishan Chandra Sen, Girija Shundari, wife of Prankrishna Sen, on behalf of Baroda Kinkor Sen, minor, of Sharoutoli.	1,475 [illegible] 0	149 12 6	553 2 0	49 14 10	603 0 10
13	295—78 / 54 8—894 / 880	Thana Chakaria, mauza Toitang, taluk Hari Das Bahardar, Har Chandra and Nobin Chandra.	Nezamat Ali Choudhuri, son of Mahmad Rafi Choudhuri, of Tollardip.	1,198 14 0	191 6 6	63 12 0	.....	63 12 0
14	298 - 300 / 3088 / 303	Thana Chakaria, mauza Kolarbil, taluk Rajakhan.	Akbor Ali Khan, son of Rahat K[illegible]han, of Sholkata.	1,044 10 0	109 9 6	358 11 9	36 9 6	395 5 3
15	299—83 / 709 / 466	Thana Chakaria, mauza Battoli, taluk Hari Das Bahardar.	Nezamat Ali Choudhuri, so[illegible]n of Mahmad Rafi Choudhu[illegible]i, of Tollardip.	503 4 0	44 4 0	188 11 0	14 12 0	203 7 0

Chittagong, the 7th June 1902

A. H. VERNEDE, Covtd. Depy. Collector *for* Collector.

Notification A.

NOTICE is hereby given, under sections 6 and 13, Act XI of 1859, that the undermentioned estates and shares of estates in the district of Cuttack will be put up for sale at the office of the Collector of that district on the 21st day of July 1902 for arrears of revenue and other demands which by law are realisable as arrears of land revenue.

When in columns 5, 7 and 9 of the appended statement it is stated that only a share is to be sold, it is to be understood that a separate account is kept for that share, and that the other share or shares in the estate are excluded from the sale.

Touzi No.	Name of mahal and pargana.	Sadar jama of whole estate.	Whether the whole estate is to be sold.	If only a share is to be sold, specification of such share or shares	Names of proprietors of property to be sold.	If only a share is to be sold, the sadar jama of such share.	If the whole estate is to be sold, the arrears due from it.	If only a share is to be sold, the arrears due from it
1	2	3	4	5	6	7	8	9
813	Tape Sahajanpur, pargana Alti.	Rs. A. P.	.....	Kt. 6a. 8g.	Babu Brindaban Harichandan and others.	Rs. A. P. 4,199 10 0	Rs. A. P.	Rs. A. P. 1,895 10 0
813/1	Ditto ditto ...	.....	.....	Kt. 3a. 4g.	Syam Sunder Narind a ...	2,099 12 0	.....	947 13 0
813/2	Ditto ditto ...	.....	.....	Kt. 3a. 4g.	Babu Braja Sunder Mardaraj.	2,099 13 0	.....	947 13 0
813/3	Ditto ditto ...	.....	.....	Kt. 3a. 4g.	Babu Gokul Chandra Srichandan, minor's mother and guardian Kanak Mali Jema.	2,099 13 0	.....	947 13 0
814.	Tape Gopalpur, pargana ditto.	7,584 0 0	Whole ...	.....	Samant Lakshmi Narayan Jagadeb.	.... .	3,792 0 0	.....
815	Kt. Thane Alamgir, pargana ditto.	.....	.....	Kt. 3a. 4g.	Hajirun Nisa Bibi	619 6 0	.....	80 11 6
2.	Kt. ma. Sauria, pargana ditto.	1,020 0 0	Whole ...	.....	Samant Lakshmi Narayan Jagadeb.	.....	501 0 6	.....
2071	Kt. Thane Alamgir, pargana ditto.	4,216 0 0	Do. ..	.....	Sarbagir Jagannath Gajapaty Narayan Deb Maharaj.	.....	708 0 0	.....
1066	Ta. Chakroda, pargana Asurasvar.	.....	... ..	Kt. 13a. 15b. 10g. 8c. 2kt. 7b.	Sricharan Kanungoe and others.	2,600 0 0	.....	96 1 4
2002	Ta. Fagu, pargana Bakhrabad.	1,187 0 0	Whole ...	.....	Choudhry Krutibas Das and others.	.....	8 6 6	.....
1313	Ta. Radha Mohan Prasad, pargana Barvan.	. . ..	... ..	Kt. 8p. 5g. 2k. 1kt. 11b. 9g. 2c. 2kt. 8b.	Choudhury Pitambar Samant Singhvar Mahapatra and others.	4,097 10 0	.....	235 9 3
1316	Ta. Radhakanta Prasad, ma. Gopinathpur, pargana ditto.	.....	.....	Kt 0p. 16g. 1c. 2kt. 0b.	Nilmoney Dobai and others	808 14 0	.....	210 14 0
1476	Ta. Gobind Prasad, pargana Choudakulat.	... ..	.....	Kt. 6p. 8g.	Babu Baliram Bhramarbar and others.	2,735 0 0	.....	1,369 2 0
1971	Ta. Padmalavpur, pargana Diharakhpur.	... .	.....	Kt. 8p. 15g. 3c. 14b. 8g. 3c.	Choudhury Kulamani Das and others.	2,764 5 0	.....	471 12 6
2060	Ta. Pubkhand, pargana Deogan.	... ..	... .	Kt. 15p. 8c. 1kt. 10b. 13g. 1c. 1kt.	Banchhanidhi Mahapatra and others.	1,436 12 0	.....	131 4 6
2580	Kt. ma. Saundihi, pargana Dolgram.	555 0 0	Whole ...	.. ...	Prusotom Panda and others	.....	135 0 0	.. .
2175	Ta. Madhyasasan, pargana Hariharpur.	... .	.....	Kt. 7a. 7p. 14kt. 11b. 13g. 2c.	Jasoda Kuanr, mother and guardian of Gonesh Prasad Bhagat.	925 4 0	.....	81 10 0
2956	Kt. kt. Ghagradamarpur, pargana Ghagradamarpur.	952 0 0	Whole ...	.....	Samant Lakshmi Narayan Jagadeb.	.....	476 0 0	.... .
3[illegible]	A. J. E. ma. Manpur, pargana Hatimanda.	750 0 0	Do. ...	.....	Dinabandhu Parida and others	... ..	343 12 0	.....
2453	Ta. Pooling, pargana Jhankar.	2,206 0 0	Do. ...	.....	De kali Kuanr and others	. .	143 8 0	.... .
2455	Ta. Birto', pargana ditto.	.....	.. ..	Kt. 14a. 8p. 18kt. 6b. 10g. 2c. 1kt.	Behari Lal Pandit and others.	2,084 7 0	.....	22 8 6
3198	Ditto ditto ...	2,837 0 0	Whole ...	.. .	Dibakar Pani and others ...	.....	176 12 0	.....
1512	Ta. Gobind Prasad, pargana Jodh.	.....	. .	Kt. 6p. 8g	Bularam Bhramarbar Rai	2,534 14 0	... ..	1,235 15 4
1512/1	Ditto ditto ...	.....	... ..	Kt. 3p. 4g.	Samsunder Narendra ...	1,267 6 0	... .	618 0 11
1512/2	Ditto ditto ...	... ..	. .	Kt. 3p. 4g.	Brajasunder Mardaraj ...	1,267 6 0	.. ..	618 0 11
1512/3	Ditto ditto ...	.....	..	Kt. 3p. 4g.	Gokul Chandra Srichandan, minor's mother and guardian Kanaknali Jema.	1,267 6 0	...	618 1 11
1434	Ta. Narayanpur, pargana Kalamati.	9,036 0 0	Whole	.....	Samant Lakshmi Narayan Jagadeb,	.....	4,528 0 0	.....
26	Ta. Sunderpur, pargana Jajpur.	1,092 13 8	Do. ...	.....	Sahadeb Rai and others ...	.....	155 9 4	... ..
58	Ta. Nahanpur, pargana Jajpur.	.....	.....	Kt. 3a. 8p. 18kt. 8b. 15g. 2c. 2kt. 4b. 14g. 1kt.	Drupaty Dei, mother and guardian of Bodyanath Panda and others.	1,169 8 0	.....	187 13 0
58/12	Ditto ditto ...	.....	.....	Kt. 2a. 11p. 4kt. 9b. 1c. 2kt. 8b.	Kalu Panda *alias* Gayadhar Panda.	1,154 1 0	.....	352 1 0
65	Ta. Bhimkarpur, pargana ditto.	.....	.....	Kt. 13a. 10p. 10kt. 14b.	Banamali Mahapatra and others.	908 5 0	.....	5 12 1
3623/2	Ta. Mulipur, pargana Palnda.	.....	... ..	Kt. 4a.	Babu Nanda Kumar Bose and others.	514 8 0	.....	257 4 0
4836	Ta. Saraswaty, pargana Saraswaty.	578 0 0	Whole ...	.....	Saraswaty Dasi	.....	289 0 0	.....
602	Ma. Palda, pargana Suhang.	.....	.....	Kt. 7a. 5p. 19kt. 7b. 10g. 3c. 1kt. 4b.	Choudhury Narindra Routra Mahapatra and others.	560 14 0	.....	274 9 6
2716/2	Ta. Singhipur, pargana Kate.	.....	.....	Kt. 3a. 3p. 15kt. 5b. ...	Choudhury Upendra Das and others.	1,064 13 0	.....	527 8 9
2716/5	Ditto ditto ...	.....	.. ...	Kt. 2a. 6p. 14b. 3g. 1c. 1kt.	Choudhury Achhutananda Das Mungaraj Mahapatra.	796 15 0	.....	39 9 0

Tauzi No.	Name of mahal and pargana.	Sadar jama of whole estate.	Whether the whole estate is to be sold.	If only a share is to be sold, specification of such share or shares	Names of proprietors of property to be sold.	If only a share is to be sold, the sadar jama of such share.	If the whole estate is to be sold, the arrears due from it.	If only a share is to be sold, the arrears due from it.
1	2	3	4	5	6	7	8	9
2741	Ta. Bhatpara, pargana Kate.	Rs. A. P. 581 0 0	Whole ...	.....	Turamani Dei, mother and guardian of Gobind Chandra Das.	Rs. A. P.	Rs. A. P. 10 10 4	Rs. A. P. .....
3595	Ma Naregan, pargana Kutia.	.....	.....	Kt. 12a. 10g. 2c. 15b. 18g. 3c. 1kt. 2b.	Jhumpa Debya	1,057 0 0	.....	111 3 3
1973	Ta. Raghunathpur, pargana Kodinda.	.....	.....	Kt. 8a.	Nanda Kumar Bose ...	1,078 0 0	.	0 8 0
1988	Ma. Sarechuan, pargana ditto.	565 0 0	Whole ...	.....	Radhasyam Swine and others	.....	91 5 4	.....
1770	Ta. Gokan, pargana Matkatnagar.	.....	.....	Kt. 6a. 5g. 1kt. 7b. 2g. 3c. 8b.	Gokhai Padhan and others	1,072 4 0	.....	59 14 6
1630	Ta. Dutial, pargana Nahankhand.	.....	.....	Kt. 5a. 15g. 2c. 16b. 19g 1c. 1kt.	Samant Lakshmi Narayan Jagadeb.	1,722 8 0	.	430 10 6
2804	Ta. Malpur, pargana Kornia.	.....	.....	Kt. 9p. 6g. 2c. 2kt. ...	Behari Lal Pandit and others.	634 11 0	.....	35 5 6
3367	Kt. ta Raisungra, pargana Sungra.	.....	.....	Kt. 10p. 4g. 1kt. 9b. 8g 2c. 2kt.	Padan Das and others ...	977 0 0	.....	138 7 0
423	Ta. Mirpur, pargana Tisania.	.....	.....	Kt. 15a. 9p. 4g. 1c. 1kt.	Sreematya Suna Dei, mother and guardian of Braja Sunder Das.	6,137 11 0	0....	199 15 7
4405	Ta. Korkora, pargana Jajpur.	.....	.....	Kt. 15p. 17g. 1kt. 13b. 3c. 5g. 2c 2kt.	Choudhury Breendaban Chandra Mahapatra and others.	641 4 0	.....	196 2 6

Cuttack Collectorate, the 4th June 1902. F. N. FISCHER, Collector.

Notification A.

NOTICE is hereby given, under sections 6 and 13, Act XI of 1859, that the undermentioned estates and shares of estates in the district of Puri will be put up for sale at the office of the Collector of that district on the 21st July 1902 at 12 noon for arrears of revenue and other demands which by law are realisable as arrears of land revenue.

When in columns 5, 7, and 9 of the appended statement it is stated that only a share is to be sold, a separate account is kept for that share, and the other shares in the estate are excluded from the sale.

Tauzi No.	Name of mahal and pargana.	Sadar jama of whole estate.	Whether the whole estate is to be sold.	If only a share is to be sold, specification of such share or shares (all other shares besides that specified are excluded from the sale).	Names of proprietors of property to be sold.	If only a share is to be sold, the sadar jama of such share.	If the whole estate is to be sold, the arrears due from it.	If only a share is to be sold, the arrears due from it.
1	2	3	4	5	6	7	8	9
		Rs. A. P.				Rs. A. P.	Rs. A. P.	Rs. A. P.
185 3	Kalia Rupas, pargana Athies.	1,099 8 0		9p. 6g. 2k. 2c. .	Trilochan Chaudhuri and others.	985 5 0		91 3 11½
2 8	Taluk Sobanpur, pargana Damarkhand.	708 0 0	Whole .		Balaram Bhramarabari Rai.	.	153 15 11½	
63 3	Taluk Purnotumpur, pargana Kotrahang.	1,316 0 0		13pans	Gopi Nath Das	912 0 0	.....	285 15 11½
257	Taluk Delang, pargana Lembai.	43,764 0 0	Whole ...		Raja Mukund Deb ...	..	15,982 0 0	
147	Mauza Herakristapur, pargana Rahang.	2,143 0 0	Do. ...		Bhikari Misra and others	.	1,071 15 11½	

Puri Collectorate, the 12th June 1902. A. GARRETT, Collector.

Notice of Sale for Arrears of Revenue.

NOTICE is hereby given, under section VI, Act XI of 1859, read with Act VII (B.C.) of 1868 and Act II (B.C.) of 1871, that the undermentioned Noabad taluks within the Patiya khas mahal, in the district of Chittagong, will be put up to public and unreserved sale at the Collector's office of that district on the 9th July 1902 for arrears and cesses remaining unpaid on the 25th day of May 1902:—

No. of tenure.	Name of tenure with its situation.	Name of proprietor.	ANNUAL RENTAL.		AMOUNT OF RENT FOR WHICH THE TENURE IS TO BE SOLD.		
			Rent.	Cesses.	Rent.	Cesses.	Total.
1	2	3	4	5	6	7	8
			Rs. A. P.	Rs. A. P.	Rs. A. P.	Rs. A. P.	Rs. A. P.
14141 19287	Thana Patiya, mahal Noabad, mauza Ichanagar, taluk Osman Sadagar and Sakup.	Raj Chandra Sen, son of Ram Kishore Sen of Sanhara and Sariotullah Sadagar.	530 0 0	14 13 0	110 12 0	5 9	116 5 0

Chittagong, the 5th June 1902. E. GRANT, Collector.

Notification of Sale.

NOTICE is hereby given, under sections 6 and 13, Act XI of 1859, read with Act VII (B.C.) of 1868, that the undermentioned tenures or shares of tenures in estate Kothdesh, in the district of Puri, will be put up for sale at the office of the Collector of that district on the 28th July 1902 at 12 A.M. for arrears of revenue and other demands which by above laws are realizable as arrears of land revenue.

N.B.—When in columns 5, 7 and 9 of the appended statement it is stated that only a share is to be sold, it is to be understood that a separate account is kept for that share, and that all other shares besides those specified will be excluded from the sale.

Number of tenure.	Name of tenure, mahal, and pargana.	Sadar jama of whole tenure.		Whether the whole tenure is to be sold,	If only a share is to be sold, specification of such share or shares. All other shares besides that specified are excluded from sale.	Names of proprietors of property to be sold.	If only a share is to be sold, the sadar jama of such share.		If the whole tenure is to be sold, the arrears due from it.		If only a share is to be sold, the arrears due from it.	
		Rent.	Cesses.				Rent.	Cesses.	Rent.	Cesses.	Rent.	Cesses.
1	2	3		4	5	6	7		8		9	
67/68	Mauza Bhairpur Mukadami, taluk Kothdesh, thana Pipli, pargana Kothdesh.	Rs. 531	Rs. A. 38 7	The whole	....	Madhu Nayak and others.	Rs. A. P.	Rs. A. P.	Rs. A. P. 35 5 0	Rs. A. P. 2 8 9	Rs. A. P.	Rs. A. P. .....
86/87	Biswarpur ditto, thana Gope, pargana Antarodh.	631	44 9	Ditto ...	.....	Durgaprasad Bhagat and others.	.....	.....	157 0 0	11 2 3	.....	.....
90/91	Biswanathpur ditto, thana Pipli, pargana Kothdesh.	1,299	85 3	.....	0p. 7g. 1k. 2k. ...	Gadadhar Pani and others.	517 3 8	33 14 10	.....	.....	107 3 4	7 8 2
128/128	Panua, pargana ditto, thana ditto.	1,266	71 15	.....	14p. 15g. ...	Durgaprasad Bhagat and others.	1,164 5 3	66 5 1	.....	.....	45 3 2	4 8 11
141/144	Garadi Punchan, ditto, pargana ditto.	880	52 12	The whole	.....	Chaudhury Kritibas Das and others.	.....	.....	137 8 0	8 8 11	... ..	... .
158/161	Hansapada, pargana ditto, thana ditto.	1,195	57 12	Ditto ...	.....	Durgaprasad Bhagat and others.	.....	.....	298 0 0	14 7 0	.....	.....
245/253	Nariso ditto, thana ditto, pargana Antarodh.	1,118	86 3	.....	8p. 15g. 1k. 2cd.	Baikuntha Sarangbi and others.	613 1 0	47 5 2	.....	.... .	19 12 0	1 8 6
266/274	Pampalo ditto, thana ditto, pargana Kothdesh.	1,036	66 0	.....	12p. 2k. 1k. 12b.	Cha. Chandrasikhar Das and others.	770 1 5	49 10 5	. ...	.....	284 12 8	20 11 3
266/274	Mauza Pampalo Makadami, taluk Kothdesh, thana Pipli, pargana Kothdesh.	1,036	66 0	.... .	3p. 1g. 1k. 1k. 4b.	Sambhunath Das.	198 10 2	12 10 2	.. ..	.....	99 5 1	6 5 1
291/299	Ratilo, pargana ditto, thana ditto.	921	51 14	.... .	12p. 5g.	Durgaprasad Bhagat and others.	705 2 3	39 11 6	.....	. ....	176 9 6	9 14 10
315/323	Sarkana ditto, thana ditto, pargana ditto.	1,327	101 3	The whole	... ..	Parasuram Mahapatra and others.	.... .	.....	343 6 3	26 2 6	.....	.....
321/329	Saulakhal ditto, thana ditto, pargana ditto.	485	34 0	.....	13p. 7d.	Durgaprasad Bhagat and others	304 5 8	27 0 2	... ..	... .	33 2 9	7 3 2
334/42	Talatanila ditto, pargana ditto, thana ditto.	534	41 1	.....	3p. 5g.	Keshab Panda and others.	425 8 6	32 11 7	..	...	56 14 9	13 11 4
338/346	Taraboi Sasan, pargana ditto, thana ditto.	746	40 6	The whole	.....	Mahant Raghunandan Ramanuj Das and others.	... .	... ..	23 4 9	1 4 1	... .	.....
346/355	Turuntira ditto, pargana Kalijori.	626	42 6	.....	14p. 2g. 2k. ...	Prucsam Sahoo and others.	552 10 3	37 6 6	....	.	276 5 1	18 11 3
3/	Bhiligram ditto, thana Gop, pargana Antarodh.	632	43 5	... ..	2p. 5g. 3k. 12d.	Madhusudan Mahaswar.	89 1 9	6 3 3	.....	....	44 8 11	3 1 8
77/85	Prataprudrapur ditto, thana Pipli, pargana Kothdesh.	1,446	100 3	.....	7p. 1g. 3k. ...	Mahant Raghunandan Ramanuj Das.	650 8 11	44 6 1	.....	... .	.. .	1 10 7

Puri Collectorate, the 14th June 1902.

A. GARRETT, Collector.

Notice of Sales for Arrears of Revenue.

NOTICE is hereby given, under section 6, Act XI of 1859, read with Act VII (B.C.) of 1868 and Act II (B.C.) of 1871, that the undermentioned Noabad taluks in the district of Chittagong will be put up to public and unreserved sale at the Collector's office of that district on the 10th day of July 1902 for arrears and cesses remaining unpaid on the 25th day of May 1902:—

Serial No.	Number of taluks.	Name of tenure with its situation.	Name of proprietor.	ANNUAL RENT.		AMOUNT OF RENT FOR WHICH THE TENURE IS TO BE SOLD.		
				Rent.	Cess.	Rent.	Cess.	Total.
1	2	3	4	5	6	7	8	9
1	883/20134	Thana town, mauza Bakalia, mahal Noabad, taluk Ahmed Ali	Munshi Moshruf Ali and others ...	Rs. A. P. 1,396 4 0	Rs. A. P. 236 5 6	Rs. A. P. 495 8 0	Rs. A. P. 79 15 0	Rs. A. P. 575 7 0
2	4757/23878	Thana Fatickcheri, mauza Jujkhola, mahal Noabad, taluk Eyarali Khan.	Obedar Rohoman Khan	2,556 0 0	166 12 0	959 0 0	42 13 9	1,001 13 9

Chittagong, the 5th June 1902.

E. GEAKE, Collector.

Advertisement of Sale.

NOTICE is hereby given that the undermentioned plots of land, no longer required by Government, situated along the East Coast (now Bengal-Nagpur) Railway, Puri Branch, in the district of Puri, will be put up to sale at 12 o'clock on the 4th day of August 1902, corresponding with the 20th Sraban 1309 Fasli, at the Puri station.

The purchasers of the several plots of land will be subject to the following conditions:—

1st.—The purchasers will have no power to make any excavations on the land nearer than 15 feet from the railway fencing, or plough the lands closer than 3 feet from its foundation.

2nd.—If the amount of purchase-money does not exceed Rs. 100, the whole amount must be paid down at once.

3rd.—If the amount of purchase-money exceed Rs. 100, one-fourth of the amount must be immediately deposited. If the balance be not paid by noon of the fifteenth day after the sale, reckoning the day of sale as one, or if that day be a close holiday, then by noon of the first succeeding office day, the sale shall be cancelled, the sum deposited being forfeited to Government, and the lot again put up for sale at the risk of the defaulting purchaser, after issue of advertisement, as in the case of original sale.

4th.—The plots of land will be sold revenue-free to the highest bidders.

5th.—The purchasers shall be put in possession on receipt by the District Collector of the orders of the Board confirming the sale.

Consecutive lot No.	Name of district.	Pargana and mauza.	Number of mile on which land is situate.	Situated on which side of the railway.	Approximate area of lot in bighas and in acres.		Land excluded from sale from each lot.		Commencement and termination of lot.	Boundary of lot.
					B. K. CH.	A. R. P.	Reasons for exclusion.	A. R. P.		
1	2	3	4	5	6		7		8	9
										(*Lot No. 1.*)
1	Puri ...	Pargana Rahang, ma. Somong.	At mile No 24.	East of the Railway line.	... .	1 3 20	.. .	... .	Lot Nos. 1 to 4 ...	*North*—Somong Bharathipur, tanki bajapti land of Hino Biswal. *South*—Kasiharipur. The land to b relinquished in the 25th mile. *East*—Somong Bharathipur, waste land of Bhagban Ramanuj Das and Durga Charan Jagadeb Ray; raiyati land of Apartia Bhoi and lakh raj bajapti land of Bala bhadra Prusti and Bhagban Raitsing. *West*—Somong Bharathipur, rai way line.
										(*Lot No. 2.*)
2	Do. ...	Ditto ...	Ditto	West of the Railway line.	.....	4 3 18	Required temporarily by P. W. D. for brick-field.	4 3 18	.....	*North*—Somong Bharathipur, lakh bajapti land of Ajib S dra and Dasa Baral a... *jora* (water channel) Jadyanath Brahmachar *South*—Somong Bharathipur. T land to be relinquished the 25th mile. *East*—Somong Bharathipur, line. *West*—Somong Bharathipur lakhraj land of Mahapatra and Mahapatra; tanki land of Badyanath B chari and tanki bah of Gadadhar Brahm
										(*Lot No. 3.*)
3	Do. ...	Pargana Rahang, ma. Kasiharipur.	At mile No. 25.	East of the Railway line.	.....	3 2 39	.....	.....	.....	*North*—Kasiharipur and Bharathipur. The be relinquished in mile. *South*—Kasiharipur, lakhraj land of Durga Bharathi. *East*—Kasiharipur embank tanki bahal land of Prusti and Durga Ch... Bharathi. *West*—Kasiharipur, railway line.
										(*Lot No. 4.*)
4	Do. ...	Ditto ...	Ditto	West of the Railway line.	.....	11 1 24	Required temporarily by P. W. D. for brick-field.	1 1 14	.....	*North*—Somong Bharathipur. The land to be relinquished in the 24th mile. *South*—Kasiharipur, lakhraj bajapti land of Balunkeswar Deb, Siba Prusti and Magunl Raut. *East*—Kasiharipur, railway line. *West*—Kasiharipur, raiyati land of Gobind Padhan and Abhi Jena; lakhraj bajapti land of Siba Prusti and Brundu Raut and tanki bahal land of Siba Prusti.
		Total ...	.....	.....	.....	21 3 21	.....	6 0 32		

Puri Collectorate, the 11th June 1902.

A. GARRETT, Collector.

Advertisement of Sale.

NOTICE is hereby given that the proprietary right of Government, as specified in the conditions of sale below, to the undermentioned estates situated in the district of Midnapore, will be put up to sale at the Midnapore Collectorate on Friday, the 26th September 1902, corresponding with the 10th of Aswin 1309 B.S. and 11th of Aswin 1310 A.S.

The purchasers will be subject to the following conditions of sale:—

Conditions of Sale.

1st.—Each estate to be sold to the highest bidder above the upset price, which will be fixed by the Collector at the time of sale. The purchasers of these estates will be considered as the proprietors of the estates, and the entire proprietary right of Government in such estates will be transferred to them, free of revenue.

2nd.—The sales to be subject to existing leases and to the rights conferred by the settlement proceedings and by the laws in force, and the purchasers to be bound to respect the rights of resident cultivators who have signed the schedule of assessment prepared by the revenue authorities.

3rd.—If the amount of purchase-money do not exceed Rs. 100, the whole amount to be paid down at once.

4th.—If the amount of purchase-money exceed Rs. 100, one-fourth of the amount bid to be immediately deposited. If the balance be not paid by noon of the fifteenth day after the sale, reckoning the day of sale as one, or if that day be a close holiday, then by noon of the first succeeding office day, the sale is to be cancelled (the sum deposited being forfeited to Government), and the estate to be again put up to sale at the risk of the defaulting purchasers, after issue of advertisement, as in the case of original sale.

Number on the district roll.	Name of estate and pargana.	Approximate area in acres.	Government revenue assessed.	Remarks.
1	2	3	4	5
2706	Hiradharpur, pargana Chandrakona ...	A. R. P. 0 0 7	Rs. A. P.	Both these estates will be sold revenue free.
2707	Ditto, ditto ..	0 0 21	.....	

Midnapore Collectorate, the 18th June 1902.

H. LUSON, Collector.

Advertisement of Sale.

NOTICE is hereby given that the proprietary right of Government, as specified in the conditions of sale below, to the undermentioned estate, situate in the district of Rajshahi, will be put up to sale at the Rajshahi Collectorate on the 4th July 1902, corresponding with 20th Ashar 1309 B.S.

The purchaser will be subject to the following conditions:—

Conditions of Sale.

1st.—The estate to be sold to the highest bidder above the upset price, which will be fixed by the Collector at the time of sale. The purchaser of this estate will be considered as the proprietor of the estate, and the entire proprietary right of Government in such estate will be transferred to him subject to the revenue fixed in perpetuity.

2nd.—The sale to be subject to existing leases and to the rights conferred by the settlement proceedings and by the laws in force, and purchasers to be bound to respect the rights of resident cultivators who have signed the schedule of assessment prepared by the revenue authorities.

3rd.—If the amount of purchase-money do not exceed Rs. 100, the whole amount to be paid down at once.

4th.—If the amount of purchase-money exceed Rs. 100, one-fourth of the amount bid to be immediately deposited. If the balance be not paid by noon of the fifteenth day after the sale, reckoning the day of sale as one, or, if that day be a close holiday, then by noon of the first succeeding office day, the sale is to be cancelled (the sum deposited being forfeited to Government), and the estate to be again put up to sale at the risk of the defaulting purchaser, after issue of advertisement, as in the case of original sale.

Number on the district roll.	Name of estate and pargana.	Approximate area in acres.	Government revenue assessed.	Remarks.
		A. R. P.	Rs. A. P.	
910	Raghunathpur, pargana Barbaria	98 2 22 $\frac{44}{121}$	131 2 6	

Collector's Office, Rajshahi, the 12th May 1902.

F. R. ROE, Collector.

Notification A.

NOTICE is hereby given, under sections 6 and 13, Act XI of 1859, that the undermentioned estates and shares of estates in the district of Chittagong will be put up for sale at the office of the Collector of that district on the 14th July 1902 at 12 A M. for arrears of revenue and other demands which by law are realizable as arrears of land revenue.

When in columns 5, 7 and 9 of the appended statement it is stated that only a share is to be sold, it is to be understood that a separate account is kept for that share.

Tauzi No.	Name of mahal and pargana.	Sadar jama of whole estate.	Whether the whole estate is to be sold.	If only a share is to be sold, specification of such share or shares	Names of proprietors of property to be sold.	If only a share is to be sold, the sadar jama of such share.	If the whole estate is to be sold, the arrears due from it.	If only a share is to be sold, the arrears due from it.
1	2	3	4	5	6	7	8	9
39 39 33	Thana Joarganj, taraf Asharaf Akbar.	Rs. A. P. 696 1 3	The whole estate will be sold	.....	Shekh Mohamad Ali Chowdhury, Shekh Chowdhury Garang and others.	Rs. A P.	Rs. A. P 25 15 11	Rs. A. P. .....
1047 1050 764	Thanas Hathazari, Patia, Rauzan, and Town, taraf Darpanarayan.	2,003 4 3	Only a share will be sold.	Only residuary share No. 12 and no other share will be sold.	Kali Kumar Rai, Chandra Kumar Rai and others.	636 15 3	 C	448 7 10
1278 1284 1017	Thana Satkania, taraf mauza Garangia, bab it taraf Mangatram Hazari.	2,015 5 9	The whole estate will be sold.	.....	Taran Sing Hazari, Rai Kollas Chandra Das Bahadur, General Manager, on behalf of Abdul Fattah Khan and others.	.....	0 4 4	.....
2093 2100 1512	Thanas Hathazari, Patia, Town, Rauzan, and Satkania, taraf Krishna Kishore Kanungoe.	645 6 7	Only a share will be sold.	Only share No. 1 and no other share will be sold.	Fazal Ahmad, Bazal Samad and others.	524 3 6	.....	131 3 4

NOTE.—The amount shown in columns 8 and 9 represents the arrear due for kist ending 25th May 1902.

Chittagong Collectorate, the 10th June 1902.

E. GEAKE, Collector.

APPENDIX XXX.

Advertisement of Sale.

NOTICE is hereby given that the undermentioned plots of land no longer required by Government, situated along the main line of the East Coast (now Bengal-Nagpur) Railway, in the district of Puri, will be put up to sale at 12 o'clock on 8th day of August 1902, corresponding with the 24th Sraban 1309 Fasli at the Puri station.

The purchasers of the several plots of land will be subject to the following conditions:—

1st.—The purchasers will have no power to make any excavations on the land nearer than 15 feet from the railway fencing, or plough the land closer than three feet from its foundation.

2nd.—If the amount of purchase-money does not exceed Rs. 100, the whole amount must be paid down at once.

3rd.—If the amount of purchase-money exceed Rs. 100, one-fourth of the amount must be immediately deposited. If the balance be not paid by noon of the fifteenth day after the sale, reckoning the day of sale as one, or if that day be a close holiday, then by noon of the first succeeding office day, the sale shall be cancelled, the sum deposited being forfeited to Government, and the lot again put up for sale at the risk of the defaulting purchaser after issue of advertisement as in the case of original sale.

4th.—The plots of land will be sold revenue-free to the highest bidders.

5th.—The purchasers shall be put in possession on receipt by the District Collector of the orders of the Board confirming the sale.

Consecutive lot number.	Name of district.	Pargana and mauza.	Number of mile on which land is situate.	Situated on which side of the Railway.	Approximate area of lot in bighas and acres.		Land excluded from sale from each lot.		Commencement and termination of lot.	Boundary of lot.
					B. K. G.	A. R. P.	Reasons for exclusion.	A. R. P.		
1	2	3	4	5	6		7		8	9
										Lot No. 1.
1	Puri	Mauza Nayagur, zilla Rameswar, kila Khurda, district Puri.	459	West of the Railway line.	.....	2 0 10	.....	.....	Lots Nos. 1 and 2.	*North.*—Mariand Patra's garden and Government waste land. *South.*—Mulikhan's garden. *East.*—Cultivated land of Pandab Srichandan and Bhikar Khan. *West.*—Cultivated land of Izir Khan, Shaik Pakir, and Pandab Srichandan.
										Lot No. 2.
2	Do.	Mauza Taladihi, zilla Kuhuri, kila Khurda, district Puri.	449	East of the Railway line.	.....	2 0 10	.....	.....		*North.*—Chanda Santra's land. *South.*—Road. *East.*—Road. *West.*—Chanda Santra's land.

Puri, the 16th June 1902.

A. GARRETT, Collector.

Notification of Sale.

NOTICE is hereby given, under sections 5 and 13, Act XI of 1859, read with Act VII (B C.) of 1868, that unless the arrears mentioned below are paid on or before the next latest date of payment, viz., the 28th April 1902, the undermentioned tenure or shares of tenure in estate Kothdesh, in the district of Puri, will be put up for sale at the office of the Collector of that district on the 28th July 1902 at 12 o'clock noon for the arrear.

When in columns 5, 7 and 9 of the appended statement it is stated that only a share is to be sold, it is to be understood that a separate account is kept for that share, and that the other share or shares in the tenure are excluded from the sale.

No. of tenure.	Name of tenure, mahal and pargana.	Sadar jama of whole tenure.		Whether the whole tenure is to be sold.	If only a share is to be sold, specification of such share or shares. All other shares besides that specified are excluded from sale.	Names of proprietors of property to be sold.	If only a share is to be sold, the sadar jama of such share.		If the whole tenure is to be sold, the arrears due from it.		If only a share is to be sold, the arrears due from it.		Nature and amount of demand for which to be sold.
		Rent.	Cesses.				Rent.	Cesses.	Rent.	Cesses.	Rent.	Cesses.	
1	2	3	4	5	6	7	8	9	10	11	12	13	14
85/91	Mauza Biswanathpur, taluk Kothdesh, thana Pipli, pargana Kothdesh.	Rs. 1,299	Rs. A. 85 3	.....	6p. 7g. 1k. 2kr.	Gadadher Pany and others.	Rs. A. P. 517 3 8	Rs. A. P. 83 14 10	.....	.....	Rs. A. A 238 9 10	Rs. A. P. 16 15 5	.....

Puri Collectorate, the 17th April 1902.

R. C. BANERJEE, Deputy Collector in charge.

Notice of Lease of Waste Lands in the Sunderbans, under Rule 19, Section 11 of the Waste Lands Manual, 1898.

NOTICE is hereby given that the lease of the land specified in the Schedule hereto annexed, and of which the plan is open to inspection at the office of the Commissioner of the Sunderbans, has been applied for by Jurnendu Narain Singha, and will be sold at 12 o'clock noon on the 2nd of October 1902, Thursday, at the Sunderbans Commissioner's office at Alipur, unless meantime the sale is stopped or postponed in consequence of claims or objection under Act XXIII of 1863 (to provide for the adjudication of claims to waste lands), or owing to any other cause.

2. The lease of the land will be granted subject to the conditions which are specified below, as well as to the general terms annexed to the Rules for the Sale of Leases of Waste Lands in the Sunderbans of the 24-Parganas, Khulna, and Backergunge, dated 12th November 1879.

Conditions.

That the land shall be subject to all existing rights of way and water and other easements.

That the right of using all streams and channels in any way navigable shall be reserved to the public, as also the use of a towpath not less than 25 feet in width on each side of every such stream and channel.

That no charge will be made for wood and timber standing on the land at the time it is leased, nor for any wood which may be cut and burnt to effect clearances, or which may be used on the land. But for wood and timber exported for sale a duty shall be levied at such rate and in such manner as may, from time to time, be prescribed by Government.

That the Government reserves to itself the right to all minerals on the land, together with such rights of way and other reasonable facilities as may be requisite for working, getting, and carrying away such minerals. It also retains its proprietary right in the land, and only confers on the lessee an occupancy right, which shall be hereditary and transferable.

Schedule.

Number of lot.	District, subdivision and thana.	Area.	Boundaries.
Lot No. 141	24-Parganas, Basirhat, Hasnabad.	Bighas. 14,916	*North*—By a portion of the Poonjali river. *East*—By a portion of the Roymangal river. *South*—By the Pagna river. *West*—By a portion of the Sharsha river and by a portion of the Poonjali river. All the above boundaries are as shown in Mr. Sunderbans Commissioner, Sunder's map of season 1901-1902.

Puri, the 27th June 1902.

D. SUNDER, Commissioner in the Sunderbans, Bengal.

District Charitable Society.

Abstract of Cash Accounts of the Central Office for the month of May 1902.

Budget for 1902.	Receipts.	May 1902.	From 1st January to 31st May 1902.	Budget for 1902.	Payments.	May 1902.	From 1st January to 31st May 1902.
Rs.		Rs. A. P.	Rs. A. P.	Rs.		Rs. A. P.	Rs. A. P.
	Subscriptions—						
14,400	From Government	1,200 0 0	6,000 0 0	11,490	Grant to District Committees	948 0 0	4,836 0 0
11,441	,, the public	570 0 0	7,507 0 0	4,900	,, ,, Commissioner of Police for Casual Relief ... Establishment ...	211 8 3	1,240 12 6
9,000	Donations and new subscriptions	*346 11 10	**2,231 14 4			75 0 0	375 0 0
	Allowances towards cost of establishment—			20,635	,, ,, Native Committee	1,016 8 0	8,082 8 0
				10,152	Pensions paid through Central Office... ...	802 8 0	4,058 8 0
3,000	From Government	250 0 0	1,250 0 0	276	Schooling Fees ,, ,, ,, ...	18 0 0	103 0 0
.....	Interest on invested general fund ...	.....	.....	3,000	Special Relief (on private orders)	245 4 6	970 7 0
29,303	,, ,, Trust Funds	9,027 7 2	17,625 9 6	3,780	Alms House :—Establishment	318 0 0	1,576 8 0
684	Bakery proceeds	†34 12 0	††332 5 9	10,500	Dieting	†871 4 9	††4,117 2 6
4,047	Workshed proceeds	§175 4 9	§§1,371 0 6	1,080	Contingencies	50 0 0	504 2
1,800	Refund on Casual Relief Account ,,	82 2 9	421 1 0	.....	Boots and Shoes	.....	.....
3,200	,, ,, Special Relief ,, ...	99 0 0	631 0 0	500	Clothing and Bedding ...	.....	267 4 3
600	Legacies	.....	.....	766	Municipal Taxes	.....	191 0
150	Miscellaneous Accounts	0 3 2	1 11 11	250	Repairs	106 4 6	106 4 6
...	Advances	.....	...	3,282	Bakery	§285 0 8	§§1,261 3 1
731	Deposits	29 11 2	335 0 4	5,238	Workshed	504 3 0	2,330 13 6
400	Christmas dinner account	... ,,	5 0 0	7,308	Central Office :—Establishment	610 12 3	3,053 14 9
.....	G. P. Notes withdrawn from Bank's safe custody.	100 0 0	900 0 0	803	Commission on Collections...	14 3 6	240 5
.....	G. P. Notes by corpus of Trust Funds	.....	.....	300	Auditing Fees	.....	150 0 0
.....	,, ,, by Security deposit ...	.....	500 0 0	500	Rent (nett)	45 0 0	227 2 6
250	Donation to Native Committee ...	.....	.....	550	Contingencies	69 1 3	223 ...
				750	Printing and Advertising ...	82 8 0	29 ...
				20	Interest on Overdraft	0 4 0	...
				58	Bank's Commission	11 10 7	37 4
				5	Law Charges	.....	5
				900	E. I. Railway Co. for Passes	.....	‡160 1
				.....	Advances	10 0 0	10 0
				851	Deposits	128 11 0	712 12 0
				400	Christmas dinner account	.....	265 0
				.....	Safe custody deposit of G. P. Notes ...	.....	500 0
				.....	Security refunded	.....	500 0
88,606	Total ...	12,835 4 10	38,852 11 4	83,514	Total ...	7,011 11 4	33,429 8

New subscriptions * Rs. 36; ** Rs. 208. ‡ Rupees 129-15-6 for Casual Relief; Rs. 42-8-6 for Special Relief.
Excluding cost of bread from Bakery for A. H. Dieting † Rs. 493; †† Rs. 2,083-8-6, Budget being Rs. 5,169.
Excluding cost of flour from Workshed to Bakery, § Rs. 117-13, §§ Rs. 563-1, Budget being Rs. 1,080.

MEMO.

	Rs. A. P.		Rs. A. P.
Receipts as above	38,852 11 4	Payments as above	33,429 8
Balance at credit in Bank of Bengal on 1st Jan. 1902	Rs. A. P. 2,744 0 8	Balance at credit in Bank of Bengal on 31st May 1902 ...	Rs. A. P. 5,481 4 8
Opening cash balance on that date	673 9 7	Cash balance in hand on that date	389 8 1
	3,417 10 3		5,870 12 9
Total ...	42,300 5 7	Total ...	42,300 5 7

CALCUTTA,
The 10th June 1902.

K. MALLIKA,
Accountant.

H. S. CASHMAN,
Secr

Statement of the Affairs of the Bank of Bengal for the week ending 24th June 1902.

LIABILITIES.

	Rs.	A.	
Capital paid up	2,00,00,000	0	0
Reserve Fund	1,10,00,000	0	0
Public Deposits at Head Office ... ... Rs 69,52,509 9 8			
Ditto ditto at Branches ,, 1,03,67,674 12 5	1,73,20,184	6	1
Other Deposits at Head Office and Branches ...	7,39,49,912	14	10
Bank Post Bills, &c.	4,80,474	5	5
Sundries	23,12,017	6	11
Rupees ...	12,50,62,589	1	3

ASSETS.

	Rs.	A.	P.
Government securities	1,38,91,487	0	0
Other authorised investments	66,29,891	0	0
Loans on Government and other authorised securities	2,59,76,779	15	9
Accounts of credit on ditto ditto	1,56,37,861	5	6
Bills discounted and purchased	2,30,85,866	15	5
Balances with other Banks	5,80,955	1	8
Bullion	.....		
Dead Stock	16,32,177	4	11
Stamps	18,477	4	3
Sundries	8,03,467	8	5
	8,82,51,463	7	11
Cash & Currency Notes at Head Office* ... Rs. 1,97,38,997 9 7			
Cash & Currency Notes at Branches† ... ,, 1,70,72,127 15 9	3,68,11,125	9	4
Rupees ...	12,50,62,589	1	3

* Includes Sovs. and ½ Sovs., value Rs. 71,595 0 0
† Do. do. do. ,, 1,18,935 0 0
Rs. 1,90,530 0 0

By order of the Directors,

BANK OF BENGAL,
Calcutta, the 27th June 1902.

E. J. BINCH, Chief Accountant.
Rate for Demand Loans, 4 per cent.
Percentage 39·13.

W. D. CRUICKSHANK,
Secretary and Treasurer.

(326—1)

List of unclaimed documents of the Calcutta Registry Office for the year 1899 for destruction under section 85, Act III of 1877.

Serial No.	Names of Parties.		Nature of document.	Number of document in register.	Book.	Volume.	Page.	Date of—	
	Claimant.	Executant.						Completion of registration.	Refusal.
1	2	3	4	5	6	7	8	9	10
								1898.	
1	Secretary of State for India in Council.	Madhusudan Sen and another	Lease ...	559	I	59	47	19th March	
2	Ditto ditto ...	Ditto ditto ...	Do. ...	849	I	61	61	17th May	
								1899.	
3	Syed Billan	Abdul Karim Khan	Mortgage ...	849	I	25	79	21st June	
4	W. G Gregory and another ...	Hon'ble J. Stanley and others	Lease ...	940	I	48	96	4th July	
5	Rajendra Nath Mitra, Rai Bahadur, and others.	H. G. A. Beatle and others ...	Do. ...	967	I	78	153	11th ,,	
6	H. W. S. Sparkes and another	F. A. D'Rozario	Mortgage ...	1151	I	35	109	10th Aug.	
7	L. Fernandez	E. C. Whitehead	Lease ...	1163	I	48	117	11th ,,	
8	G. M. Doucett	W. Leslie and another	Surrender of lease.	1209	I	21	126	17th ,,	
9	Jatindra Lal Dutt	Kshirode Gopal Banerji ...	Lease ...	1245	I	65	207	25th ,,	
10	Don Bal and others	Sylhet Lime Company, Limited, and others.	Do. ...	1252	I	73	138	19th Sept.	
11	Kinkar Chandra Pal	Chitamani Pal and others ...	Sale ...	1641	I	33	140	1st Dec.	
12	Ethel Beatrice Creffield ...	C. S. Madge	Bond ...	45	IV	2	21	18th March	
13	N. J. Rodrigues	Banamali Kundu and another	Sale ...	176	IV	2	87	16th Aug.	
14	Giridhari Lal Serawgi and others.	Jina Begum	Power-of-attry.	187	IV	6	88	22nd ,,	
									1899.
15	Bhut Nath Mitter	J. L. Anderson and another ...	Lease ...	P. 338 for 1898	...	...	...	.....	9th Jany.
16	Banamali Adhaya	Muchkunda Lal Mallick ...	Mortgage ...	P. 349 ,, ,,	...	...	...	.....	4th May.
17	Mugshi Nawab Ali and others	O. Browne and another ...	Lease ...	P. 352 ,, ,,	...	...	...	.....	10th ,,
18	Amrita Nath Das	A. H. Ghuznavi	Surrender of lease.	P. 1 ,, 1899	...	...	...	.....	10th ,,
19	Mir Mahabat Ali	Avij Bibi	Sale ...	P. 33 ,, ,,	...	...	...	.....	5th Sept.
20	Jagendra Lal Patra	Abdul Samad	Lease ...	P. 131 ,, ,,	...	...	...	.....	6th Nov.
21	Rasik Lal Seal and another ...	Akshay Mani Dasi	Gift* ...	.....	...	...	...	.....	11th Dec.

* Refused at the time of presentation.

Registered at the Calcutta Joint Sub-Registry Office.

								1899.	
1	Chaturbhuj Ghose Bhandari ...	Behari Lal Nandan	Agreement ...	3	IV	2	4	11th Jany.	
2	Rakhal Das Nag	Chandi Ch. Nandi	Ditto ...	141	IV	2	223	12th July	
3	Ditto	Kunja Behari Das	Ditto ...	142	IV	2	225	14th ,,	
4	Ditto	Surja Kumar Das	Ditto ...	143	IV	2	247	13th ,,	
5	Ditto	Srikush Ch. Barat	Ditto ...	144	IV	2	229	12th ,,	
6	Ditto	Amrita Lal Das	Ditto ...	145	IV	2	231	12th ,,	
7	Ditto	Rajani Kanta Banerji	Ditto ...	146	IV	1	234	12th ,,	
8	Ditto	Adhor Ch. Nag	Ditto ...	147	IV	1	236	13th ,,	
9	Ditto	Kedar Nath Nandi	Ditto ...	148	IV	1	238	12th ,,	
10	Nerode K. Dutt	Kherod- Kumar Dutt	Power ...	175	IV	1	267	3rd Aug.	
11	Munsiff's Court establishment	Backtawar Mull	Do. ...	185	IV	1	280	25th ,,	
12	Surendra Nath Chakrabarti ...	Ramratan Agarwala	Do. ...	215	IV	3	79	5th Oct.	
13	Manmatha Nath Chatterji and others.	Atal Behari Bhaduri	Sale ...	242	IV	3	121	24th Nov.	
14	Rasik Lal Mullik	Ram Charan Ghosal	Do. ...	244	IV	3	125	27th ,,	
15	Bhuth Nath Mazumdar and another.	Adhar Ch. Datta and another	Agreement ...	270	IV	4	128	21st Dec.	
16	Hansidhar	Chaitram and others	T. Lease ...	56	I	5	32	19th Jany.	
17	Atal K. Sen	Charan Mani Dasi	Sale ...	800	I	17	13	20th June	
18	Harish Ch. Newgi and others...	Luchoo Jeswar	T. Lease ...	728	I	9	291	5th ,,	
19	Shamsarabini Dasi	Durga Das Ghose and others	I Bond ...	785	I	12	298	16th ,,	
20	Hem Kumari Dasi	Mumtas Ahmed	T. Lease ...	1467	I	29	115	24th Nov.	
21	Chaitram and another	Bhujan Lal Lohea	Do. ...	1336	I	25	217	6th ,,	
22	Abinash Ch. Nandi	Hari Lal Nandi	Sale ...	1370	I	26	100	31st Oct.	
23	Braja Lal Mitra	Ram Chandra Dutt	Agreement ...	1309	I	25	55	25th ,,	
24	Kartik Ch. Dutt	Banoo Bibi	Mortgage ...	1293	I	23	118	5th ,,	
25	Jnanendra Nath De	Narayan Das Bhattacharja ...	Ditto ...	1235	I	24	30	25th Sept.	
26	Premmani Dasi	Dahoo Bibee	Ditto ...	814	I	15	89	20th June	
27	Khetra Mohan Ghose *alias* Pal	Hari Mati Debi	Re onveyance	993	I	16	230	27th July	
28	Mirza Kasmi Miskly	Fatima Khanum	General power	188	...	...	...	2nd Sept.	
29	Harnarayan	Sahakram	Special do.	19	...	...	...	14th Jany.	
30	Bhutnath Mazumdar	Adhar Ch. Datta and another	Ditto	283	...	...	...	5th Dec.	
									1899.
31	Gopinath Ghose	Rani Hemangini Dasi	Release ...	Serial No. 1034	I	...	...	.....	5th Jany.
32	Jogendra Ch. Roy and another	Kailash Ch. Dutt	Sale ...	1334	IV	...	...	.....	5th ,,
33	Sugan Ch. Jauhari	Mahammed Siddiq *alias* Nathoo.	Mortgage ...	1772	I	...	...	.....	28th Feby.
34	Jogendra N. Mullik	Omrao Sing and others ...	Ditto ...	1834	I	...	...	.....	7th April
35	... ...	Kirunmani Debi	Settlement ...	1909	I	...	...	.....	21st July.
36	Pitambar Ghoshal	Khudumani Dasi	Sale ...	1494	I	...	...	.....	30th Dec.

CALCUTTA,
The 5th June 1902.

B. L. CHANDRA,
Registrar of Calcutta.

THE COMMISSIONERS FOR THE PORT OF CALCUTTA.

THE following revised scale of charges on wheat, seeds, gram, dhal, peas and lentils shipped at the Docks having been approved by the Local Government, is now published for general information in accordance with section 107 of Act III of 1890, and will come into force on and from the date of this notice.

By order of the Commissioners,

R. A. DONNITHORNE,

Secretary.

PORT COMMISSIONERS' OFFICE,
Calcutta, the 1st July 1902.

REVISED RATES FOR THE SHIPMENT, STORAGE, &c., OF WHEAT, SEEDS, GRAM, DHAL, PEAS AND LENTILS AT THE DOCKS.

Shipment Sheds.

A charge of 6 annas per ton will be made on wheat, seeds, gram, dhal, peas and lentils shipped from the quays. Such charge will include receiving the goods from railway wagons, flats, boats or carts and stacking them in the sheds prior to shipment. It will also include the Port Trust Railway freight on consignments delivered into the Commissioners' wagons at any of the town stations on the Port Trust Railway for shipment at the Docks.

2. The same rate of 6 annas per ton will be charged on consignments put into boats or flats for shipment in the stream.

3. A removal charge of 4 annas per ton will be made for removal of consignments from one shed to another, or from the Docks for shipment at the Jetties.

4. A charge of 2 annas per ton will be made when goods originally declared for one vessel are redeclared for another or have been shut out from a vessel.

5. Rent will be charged at the rate of 2 annas per ton per week or part of a week—

(*a*) On goods received in a shipment shed before it is open for the receipt of exports for the vessel by which the goods are to be shipped. Such rent shall cease to accrue as soon as the shed is declared to be open for the receipt of exports by such vessel.

(*b*) On goods shut out if a fresh dock challan is not submitted by the fourth day following that on which the vessel completed loading.

NOTE.—When cargo shut out by one steamer is shipped in another steamer of the same line and through the same shed within seven days from midnight of the date on which the vessel shutting out the cargo completed loading, the charge under clause 4 is waived, provided the shipping papers are submitted by the fourth day following that on which the vessel completed loading; failing which, paragraphs 4 and 5 apply.

Kantapukur Sheds.

6. On consignments unloaded in the Kantapukur Sheds the following extra charges will be made:—

(*a*) Rent at the rate of 2 annas per ton per week or part of a week.

(*b*) Removal charge at 4 annas per ton for removal of consignment from one shed to another, or to the shipment sheds.

7. Shed accommodation at Kantapukur will also be rented out at the rate of Rs. 25 for per 1,000 square feet per mensem on the condition that the Commissioners after delivering consignments into the shed shall have no further responsibility in regard to them until such time as they are redelivered to the Commissioners into wagons. The Commissioners will unload into the shed and reload into wagons.

SPECIAL NOTICE.

1. Consignors are specially advised that full wagon loads can be booked direct from up-country (*a*) to a shipper or (*b*) to a shipment shed provided the vessel's name be previously declared. Full particulars in all such cases must be given in the railway receipts, invoices and wagon labels.

2. If a shipment shed be not specified, the goods will be unloaded in the general receiving sheds at Kantapukur. Consignments rejected by shippers may on the order of the owner be reloaded and conveyed by rail to Hatkhollah or Pathuriaghatta at 6 annas per ton, the loading at the Dock being done by the Port Commissioners and the unloading at Hatkhollah or Pathuriaghatta by the consignees.

3. Consignors are further advised that consignees who are not also shippers will be allowed the same free time for taking delivery as at Howrah, and that demurrage will be charged as follows, counting from midnight of the day on which the goods become available for delivery:—

For the first 48 hours no charge, and for each subsequent 24 hours or part thereof, 1 pie per maund or part of a maund.

4. Shippers will be charged rent at the rate of 2 annas per ton per week or part of a week, but any unexpired free time allowed to consignees, whose goods have been taken over by them for shipment, will be added to the first week for which the charge of 2 annas is levied.

B. G.

THE COMMISSIONERS FOR THE PORT OF CALCUTTA.

NOTICE.

THE following revised scale of charges on goods landed at the Jetties and Docks, having been approved by His Honour the Lieutenant-Governor of Bengal, is now published for general information, in accordance with the provisions of section 107, Act III (B.C.) of 1890, and will come into force from the third day of July 1902.

By order of the Commissioners,

R. A. DONNITHORNE,

The 1st July 1902. *Secretary.*

SCHEDULE A.

Revised Rate of Charges and Rent to be paid by Owners, Importers or Consignees for Goods landed at the Jetties and Docks, and for their removal when not cleared within forty-eight hours, to the Custom House or Commissioners' Import Warehouse.

No.	Description.	Wharfage at the Jetties and Docks.	For removal of goods not claimed within 48 hours to the Custom House or Import Warehouse.	Rent per month to be charged at the Import Warehouse, at Wharf, and at Jetty Sheds, on all goods not claimed within 48 hours.
		Rs. A. P.	Rs. A. P.	Rs. A. P.
1	Abbir, per cwt.	0 1 6	0 0 9	0 8 0
2	Accoutrements, military	Measurement rates.		
3	Acids, per case	0 2 0	0 1 0	0 12 0
4	Do. dangerous, per case	0 4 0	0 3 0	2 0 0
5	Ærated waters, per dozen quarts	0 0 9	0 0 6	0 6 0
6	Agricultural and horticultural machines, per cwt.	0 2 0	0 1 0	0 8 0
7	Almonds, per cwt.	0 1 6	0 0 9	0 6 0
8	Aloes, ,, ...	0 1 6	0 0 9	0 6 0
9	Alta, ,, ...	0 3 0	0 1 6	0 6 0
10	Alum, ,, ...	0 1 0	0 0 6	0 4 0
11	Anchor, ,, ...	See charges by weight.		
12	Aniseed, in bags of 2 bazar maunds, per bag ...	0 1 0	0 0 6	0 8 0
13	Antimony, per cwt.	0 3 0	0 1 6	0 8 0
14	Arms, fire—See guns.			
15	Arrowroot, per case	0 2 0	0 1 0	0 12 0
16	Arsenic, per cwt.	0 4 0	0 2 0	0 8 0
17	Asbestos packing, per cwt.	0 1 6	0 0 9	0 4 0
18	Asphalte, ,, ...	0 1 6	0 0 9	0 4 0
19	Assafœtida, ,, ...	0 1 6	0 0 9	0 10 0
20	Axles in cases, ,, ...	0 1 6	0 0 9	0 8 0
21	Axles, loose, ,, ...	0 2 0	0 1 0	0 6 0
22	Baggage, passengers, per package	0 4 0	0 2 0	1 8 0
23	Ballast, per cwt.	0 0 4	0 0 3	0 2 0
24	Bark, in bags, per cwt.	0 1 6	0 0 9	0 10 0
25	Barley, in bags of 1¼ bazar maunds, per bag ...	0 1 0	0 0 6	0 8 0
26	Bath-bricks, per case	0 2 0	0 1 0	0 12 0
27	Bath, galvanised-iron, per bundle	0 6 0	0 4 0	2 8 0
28	Beads in cases, per case	0 2 0	0 1 0	0 12 0
29	Bedanna, per cwt.	0 2 0	0 1 0	0 8 0
30	Bedsteads, per package	2 0 0	1 0 0	12 0 0
31	Beer and porter, in wood, per Imperial gallon ...	0 0 2	0 0 1	0 1 0
32	Ditto bottled, per dozen quarts ...	0 0 9	0 0 6	0 6 0
33	Bellows, per package	0 5 0	0 2 6	1 0 0
34	Belting leather, &c., in package, per cwt. ...	0 1 6	0 0 9	0 4 0
35	Betelnut, per cwt.	0 1 0	0 0 6	0 8 0
36	Bicycles, tricycles and velocipedes, each ...	1 0 0	0 8 0	6 0 0
37	Billiard requisites and parts of tables, per case ...	0 2 0	0 1 0	0 12 0
38	Do. slates, per ton	4 0 0	2 0 0	4 0 0
39	Biscuits, in cases or casks, per case or cask ...	0 3 0	0 2 0	1 8 0
40	Ditto, in tins, loose, per one dozen ...	0 4 6	0 1 0	0 4 0
41	Blacking, per case	0 2 0	0 1 0	0 12 0
42	Black-seed, in bags of two bazar maunds, per bag	0 1 0	0 0 6	0 8 0
43	Blankets (see woollen piece-goods)	Schedule No. 263.		
44	Bleaching powder in package, per cwt. ...	0 1 6	0 0 9	0 4 0

No.	Description.	Wharfage at the Jetties and Docks.	For removal of goods not claimed within 48 hours to the Custom House or Import Warehouse.	Rent per month to be charged at the Import Warehouse, at Wharf, and at Jetty Sheds, on all goods not claimed within 48 hours.
		Rs. A. P.	Rs. A. P.	Rs. A. P.
45	Bobbins, wooden, in cases	Measurement rates.		
46	Bolts and nuts in package, per cwt.	0 1 6	0 0 9	0 4 0
47	Bones and bone-dust, in bags, per cwt. ...	0 1 0	0 0 6	0 4 0
48	Boots and shoes, in cases	Measurement rates.		
49	Borax, per cwt.	0 2 0	0 1 0	0 10 0
50	Bottles, empty, per dozen	0 0 6	0 0 3	0 3 0
51	Braids, per package	0 12 0	0 8 0	5 0 0
52	Bran, in bags of 1¼ bazar maunds, per bag ...	0 1 0	0 0 6	0 8 0
53	Brass of sorts, per cwt.	0 1 6	0 1 0	0 4 0
54	Brimstone or Sulphur, per barrel	0 4 0	0 2 0	2 0 0
55	Bristles, per chest	0 12 0	0 8 0	5 0 0
56	Brushes, per case	0 7 0	0 5 0	3 8 0
57	Buckets, iron, per dozen	0 1 9	0 1 0	0 4 0
58	Butter, in kegs or casks, per cwt.	0 4 0	0 2 0	0 10 0
59	Cables and chains, per cwt.	0 1 6	0 0 9	0 4 0
60	Camphor, in cases, per case	0 2 0	0 1 0	0 4 0
61	Camphor-wood, per cwt	0 1 6	0 0 9	0 8 0
62	Candles, per box of 25 lbs.	0 0 9	0 0 6	0 2 0
63	Canvas in bales, per bale	0 6 0	0 4 0	2 0 0
64	Do. country, per bundle of two bolts ...	0 1 6	0 0 9	1 0 0
65	Carafts and stone jars	Measurement rates.		
66	Cardamoms, per cwt.	0 4 0	0 2 0	0 8 0
67	Cardboards and Strawboards, per case or bale ...	0 6 0	0 4 0	2 8 0
68	Carpets	Measurement rates.		
69	Carriages on four wheels, each	6 0 0	3 0 0	30 0 0
70	Ditto two ditto ,, ...	3 0 0	1 8 0	20 0 0
71	Carriages in cases	Measurement rates.		
72	Carts, each	2 0 0	1 0 0	12 0 0
73	Cartridges (empty) per case	1 4 0	0 12 0	8 0 0
74	Do. (loaded) ,, ...	0 6 0	0 4 0	2 8 0
75	Castor seeds, per bag of 2 bazar maunds ...	0 0 6	0 0 6	0 8 0
76	Caustic soda, in drums, per cwt.	0 1 6	0 0 9	0 4 0
77	Cement, per barrel	0 3 0	0 2 0	1 8 0
78	Chairs, China, deck, &c, each	0 2 0	0 1 0	1 0 0
79	Chalk, per cwt.	0 0 6	0 0 6	0 2 0
80	Chanks, in bags, per cwt.	0 1 6	0 0 9	0 8 0
81	Cheese, per package	0 2 0	0 1 0	0 12 0
82	Chemicals, photographic, per case	0 4 0	0 3 0	2 0 0
83	Chillies, per cwt.	0 1 6	0 0 9	0 10 0
84	China preserves, in cases, per case	0 2 0	0 1 0	0 12 0
85	Do. roots, per cwt.	0 1 6	0 0 9	0 4 0
86	Chiretta, ,, ...	0 1 6	0 0 9	0 4 0
87	Chussum, in screwed bales, per bale	0 3 0	0 1 6	2 0 0
88	Cider, per dozen quarts	0 0 9	0 0 6	0 6 0
89	Cigars, in cases	Measurement rates.		
90	Cinnamon or cassia, per cwt.	0 3 0	0 1 6	0 8 0
91	Clocks, in cases, per case	0 3 0	0 2 0	1 8 0
92	Cloves, in bags, per cwt.	0 2 0	0 1 0	0 8 0
93	Coal or coke, per cwt.	0 0 6	0 0 6	0 2 0
94	Coins, copper, in bags, per cwt.	0 2 0	0 1 0	0 6 0
95	Cochineal, per cwt.	0 4 0	0 2 0	0 8 0
96	Cocoanuts, per 100	0 1 0	0 0 6	0 2 0
97	Coffee, per cwt.	0 2 0	0 1 0	0 8 0
98	Coir-matting, per roll	0 2 0	0 1 0	0 4 0
99	Coir-yarn, per cwt.	0 1 6	0 0 9	0 6 0
100	Colours, dry, per package	0 4 0	0 3 0	2 0 0
101	Coprah and cocoanut shells, per cwt. ...	0 1 0	0 0 6	0 2 0
102	Copper, per cwt.	0 1 6	0 1 0	0 4 0
103	Copperas, per cwt.	0 1 0	0 0 6	0 4 0
104	Coral, in cases, per case	0 3 0	0 2 0	1 8 0
105	Cordage, per cwt.	0 3 0	0 1 6	0 6 0
106	Corks	Measurement rates.		
107	Corriander seed, per bazar maund	0 0 6	0 0 3	0 4 0
108	Cotton, per bale	0 2 0	0 1 6	2 0 0
109	Cowries, per cwt.	0 1 0	0 0 6	0 4 0

No.	Description.	Wharfage at the Jetties and Docks.	For removal of goods not claimed within 48 hours to the Custom House or Import Warehouse.	Rent per month to be charged at the Import Warehouse, at Wharf, and at Jetty Sheds, on all goods not claimed within 48 hours.
		Rs. A. P.	Rs. A. P.	Rs. A. P.
110	Crafters (China fireworks), per case	0 6 0	0 4 0	2 8 0
111	Creosote, per gallon	0 0 3	0 0 2	0 2 0
112	Crockery	Measurement rates.		
113	Crucibles, per cask	0 12 0	0 8 0	5 0 0
114	Cubebs, per cwt.	0 1 6	0 0 9	0 8 0
115	Cummin seeds, per bag of 2 bazar maunds ...	0 2 0	0 1 0	0 8 0
116	Currycombs, per package	1 4 0	0 12 0	8 0 0
117	Cutch or gambier, per cwt.	0 2 0	0 1 0	0 10 0
118	Cutlery in cases, per case	0 2 0	0 1 0	0 12 0
119	Dammar, per cwt.	0 1 6	0 0 9	0 4 0
120	Dates, per cwt.	0 1 6	0 0 9	0 4 0
121	Dál, per bag of 2 bazar maunds	0 1 0	0 0 6	0 8 0
122	Dhunea, per bag of 1¼ bazar maunds ...	0 1 0	0 0 6	0 8 0
123	Drainage pipes. per cwt.	0 1 6	0 0 9	0 4 0
124	Drugs, case—See medicines	Schedule No 230.		
125	Dye-wood, per cwt	0 1 0	0 0 6	0 4 0
126	Earth, Fuller's, per cwt.	0 1 0	0 0 6	0 4 0
127	Earthenware	Measurement rates		
128	Earth or lubricating oil, in casks, per bazar maund	0 1 0	0 0 6	0 12 0
129	Elephant's teeth and tusks, per cwt.	0 4 0	0 2 0	1 0 0
130	Enamelled ironware, per package	0 6 0	0 4 0	2 8 0
131	Epsom salts, in cask, per cwt.	0 1 6	0 0 9	0 4 0
132	False pearls, per case	0 2 0	0 1 0	0 12 0
133	Feathers	Measurement rates.		
134	Felt	Ditto.		
135	Fibres of sorts, per bundle or bale	0 7 0	0 5 0	3 8 0
136	Fire-blocks, per cwt.	0 1 0	0 0 6	0 3 0
137	Fire-bricks, per 1,000	2 0 0	1 8 0	4 0 0
138	Fire-clay, per cwt.	0 1 6	0 0 9	0 3 0
139	Fish, dried, and salted, in kegs, per keg ...	0 3 0	0 1 6	0 8 0
140	Fishing poles, per bundle	0 3 0	0 1 6	1 8 0
141	Flax, per bale	0 1 6	0 0 9	0 8 0
142	Flour, in barrels, per barrel	0 4 0	0 2 0	1 0 0
143	Do. in bags, per cwt.	0 2 0	0 1 0	0 4 0
144	Flower-pots, per dozen	0 4 0	0 2 0	0 6 0
145	Forks, digging, per dozen	0 2 6	0 1 3	0 8 0
146	Fowls, per cage	0 12 0	.....	.....
147	Fruits, dried, per cwt.	0 2 0	0 1 0	0 8 0
148	Furniture	Measurement rates.		
149	Galangal, per cwt.	0 1 6	0 0 9	0 6 0
150	Gall-nuts, per cwt.	0 1 6	0 0 9	0 6 0
151	Gamboge, per case	0 4 0	0 3 0	2 0 0
152	Gauzaban, per cwt.	0 1 6	0 0 9	0 6 0
153	Garlic, per bazar maund	0 1 6	0 0 9	0 8 0
154	Ganja, per bazar maund	0 4 0	0 2 0	1 0 0
155	Ghee, per cwt.	0 4 0	0 2 0	0 10 0
156	Ginger, per cwt.	0 1 6	0 0 9	0 10 0
157	Glassware (crate) per crate	0 2 0	0 1 0	0 12 0
158	Glass, plate, &c., per case	0 8 0	0 6 0	4 0 0
159	Do., window, per case	0 2 0	0 1 0	0 4 0
160	Gold, bar, leaf, &c., per box	0 4 0	.....	.....
161	Gram, per bag of 2 bazar maunds	0 1 0	0 0 6	0 8 0
162	Grapes, per package	0 3 0	0 2 0	1 8 0
163	Grease, per cwt.	0 4 0	0 2 0	0 8 0
164	Gum, in cases, per case	0 3 0	0 2 0	1 8 0
165	Gunny-pieces in screwed bales, per bale ...	0 8 0	0 4 0	3 0 0
166	Gunny-cloth in screwed bales, per bale of 12 pieces	0 6 0	0 3 0	2 8 0
167	Gunny-bags, in screwed bales, per bale ...	0 4 0	0 2 0	2 8 0
168	Gunny, loose, bundles of 50 pieces, per bundle ...	0 1 6	0 0 9	1 0 0
169	Guano, per cwt.	0 3 0	0 1 6	0 6 0
170	Guns, small arms, sporting guns, rifles, each ...	0 2 0	0 1 0	0 12 0
171	Do., do. pistols, revolvers, &c., per case ...	0 3 0	0 1 6	0 4 0
172	Guttapercha, per cwt.	0 1 6	0 0 9	0 6 0
173	Hair of sorts, per cwt.	0 2 0	0 1 0	0 8 0
174	Hams, in canvas, each	0 1 0	0 0 6	0 2 0

No.	Description.	Wharfage at the Jetties and Docks.	For removal of goods not claimed within 48 hours to the Custom House or Import Warehouse.	Rent per month to be charged at the Import Warehouse, at Wharf, and at Jetty Sheds, on all goods not claimed within 48 hours.
		Rs. A. P.	Rs. A. P.	Rs. A. P.
175	Hams, in cases, per case	0 3 0	0 2 0	1 8 0
176	Hardware	Measusement or by weight if it would give a bigger result.		
177	Harness	Measurement rates.		
178	Hats and caps	Ditto.		
179	Hemp in bales of 300 to 400 lbs., per bale ...	0 2 0	0 1 0	2 0 0
180	Herbs, per cwt.	0 2 0	0 1 0	0 6 0
181	Hides, buffalo, per 100	1 0 0	0 8 0	4 0 0
182	Do. cow, per 100	0 8 0	0 4 0	3 0 0
183	Hoes, in chest or cask, per cwt.	0 1 6	0 0 9	0 4 0
184	Hog's lard, per cwt.	0 4 0	0 2 0	0 10 0
185	Honey, per cwt.	0 2 0	0 1 0	0 6 0
186	Hops, per bale or case	0 8 0	0 4 0	2 8 0
187	Horns, per cwt.	0 1 6	0 0 9	0 6 0
188	Horses or cows, each	2 0 0	.....	.....
189	Horses, mules, donkeys, camels, oxen and cows at owner's risk, who will provide slings, each ...	2 0 0	.....	.....
190	Ditto Ditto, if landed by staging, subject to a minimum charge of Rs. 300, each ...	1 0 0	.....	.....
191	Horse-box, each	3 0 0	2 0 0	20 0 0
192	Hosiery, millinery and haberdashery ...	Measurement rates.		
193	India-rubber, per cwt.	0 1 6	0 0 9	0 6 0
194	Ditto goods, per package	0 12 0	0 8 0	5 0 0
195	Indigo, per chest	0 5 0	0 2 6	.....
196	Instruments, musical, mathematical, philosophical, surgical, &c.	Measurement rates.		
197	Iron, in plates, bars, rods, hoops, pig, angle, nail, rails, sleepers, &c., per ton	1 0 0	Per cwt. 0 0 9	Per cwt. 0 3 0
198	Iron castings, or hollow-ware, per cwt. ...	0 1 0	0 1 0	0 8 0
199	Do. galvanized, per ton	1 10 0	0 0 9	0 4 0
200	Do. girders, columns, railings, bridgework, tanks, posts, &c., per ton	1 4 0	0 0 9	0 8 0
201	Iron girders, columns, railings, bridgework, tanks, posts, &c., over 2 tons	Charges by weight.		
202	Iron safes, per cwt.	0 2 0	0 1 0	0 8 0
203	Isinglass, per case	0 4 0	0 3 0	2 0 0
204	Ivory, per cwt.	0 4 0	0 2 0	1 0 0
205	Jewellery, per box	1 0 0	.....	8 0 0
206	Jute and jute-cuttings in bales of 300 to 400 lbs per bale	0 2 0	0 1 0	2 0 0
207	Kajaputty oil, per case	0 6 0	0 4 0	2 8 0
208	Lac-dye, per chest	0 3 0	0 1 6	2 0 0
209	Lac, stick, per cwt.	0 1 0	0 0 6	0 4 0
210	Lamatta, per case	0 3 0	0 2 0	1 8 0
211	Lamps	Measurement rates.		
212	Lamp-black, per cwt.	0 3 0	0 1 6	0 8 0
213	Lead, in rolls, ingots, shots, &c., per cwt. ...	0 1 6	0 1 0	0 4 0
214	Lead ore (in kegs), per cwt.	0 1 6	0 0 9	0 4 0
215	Leather, per case	0 4 0	0 3 0	2 0 0
216	Linen, „	0 4 0	0 3 0	2 0 0
217	Linseed, per bag of two bazar maunds ...	0 1 0	0 0 6	0 8 0
218	Locks in chest or cask, per cwt.	0 1 6	0 0 9	0 4 0
219	Logwood, per cwt.	0 1 0	0 0 6	0 4 0
220	Mace, per cwt.	0 3 0	0 1 6	0 8 0
221	Machinery in pieces or cases	See charges by weight or measurement, whichever gives the bigger result.		
222	Mahogany, per ton of 50 cubic feet	2 0 0	1 0 0	4 0 0
223	Malacca canes, per bundle	0 3 0	0 1 6	0 8 0
224	Mats, China or other, per roll	0 12 0	0 8 0	5 0 0
225	Marble, in slabs, per cwt.	0 2 0	0 1 6	0 3 0
226	Marble tiles, in cases, per cwt.	0 2 0	0 1 6	0 3 0
227	Ditto, not exceeding 2 feet square, per 100	4 0 0	4 0 0	5 0 0
228	Matches, per case	0 7 0	0 5 0	3 8 0
		Double rates if not cleared within 24 hours.		

No.	Description.	Wharfage at the Jetties and Docks.	For removal of goods not claimed within 48 hours to the Custom House or Import Warehouse.	Rent per month to be charged at the Import Warehouse, at Wharf, and at Jetty Sheds, on all goods not claimed within 48 hours.
		Rs. A. P.	Rs. A. P.	Rs. A. P.
229	Matee-seed, per bag of 2 bazar maunds ...	0 1 0	0 0 6	0 8 0
230	Medicines, per case	0 3 0	0 2 0	1 8 0
	Millinery and haberdashery—See Hosiery, &c.	Schedule No. 192.		
231	Mirrors	Measurement rates.		
232	Molasses in casks, per cwt.	0 1 0	0 0 6	0 10 0
233	Mother-o'-pearl, per cwt.	0 1 6	0 0 9	0 6 0
234	Mouldings, per package	4 0 0	2 8 0	30 0 0
235	Munjeet, per cwt.	0 1 0	0 0 6	0 6 0
236	Mustard-seed, per bag of 2 bazar maunds ...	0 1 0	0 0 6	0 8 0
237	Myrabolams, per cwt.	0 1 0	0 0 6	0 6 0
238	Nails in kegs, do	0 2 0	0 1 0	0 4 0
239	Naptha, per gallon	0 0 4	0 0 2	0 2 0
240	Needles, per cwt.	0 4 0	0 2 0	0 4 0
241	Nutmegs, do.	0 3 0	0 1 6	0 8 0
242	Oars, per dozen	1 0 0	0 8 0	2 0 0
243	Oats, per bag of 1¼ bazar maunds	0 1 0	0 0 6	0 8 0
244	Ochre, yellow, per cwt.	0 3 0	0 1 6	0 8 0
245	Oilcakes, do.	0 1 0	0 0 6	0 8 0
246	Oil, essential, per case	0 3 0	0 2 0	1 8 0
247	Oil, linseed and other vegetable oils in drums per Imperial gallon	0 0 4	0 0 2	0 2 0
248	Oil, linseed and other vegetable oils in casks, per Imperial gallon	0 0 3	0 0 2	0 2 0
249	Oilman's stores, per case	0 2 0	0 1 0	0 12 0
250	Onions, per maund	0 0 9	0 0 6	0 6 0
251	Opium, per chest	0 4 0	0 2 0	.....
252	Paddy, per bag of 1¼ bazar maunds	0 1 0	0 0 6	0 8 0
253	Paints, in kegs of 28 to 56 lbs., per cwt. ...	0 3 0	0 2 0	0 8 0
254	Do. in casks, per cwt.	0 2 0	0 1 6	0 8 0
255	Patchuck, per cwt.	0 2 0	0 1 0	0 10 0
256	Perfumery, per case	0 4 0	0 3 0	2 0 0
257	Peas, of all sorts, per bag of 2 bazar maunds ...	0 1 0	0 0 6	0 8 0
258	Pepper, black and long, per cwt.	0 2 0	0 1 0	0 8 0
259	Phials, per case or crate	0 7 0	0 5 0	3 8 0
260	Phosphorus, per case	0 2 0	0 1 0	0 12 0
261	Piece-goods, cotton, per bale or case	0 3 0	0 2 0	2 0 0
262	Ditto, silk, in cases, per case	0 6 0	0 4 0	2 8 0
263	Ditto, woollen, of country or European manufacture, per bale or case	0 6 0	0 4 0	2 8 0
264	Pit saws, per case or crate	0 6 0	0 4 0	2 8 0
265	Pitch and tar, per barrel	0 4 0	0 2 0	2 0 0
266	Ditto, per hogshead	0 8 0	0 4 0	4 0 0
267	Ditto, per butt or puncheon ...	0 12 0	0 6 0	6 0 0
268	Plants, in packages, per package	0 6 0	0 3 0	2 0 0
269	Plated-ware, in cases, per case	0 4 0	0 3 0	2 0 0
270	Polish, French, per gallon	0 1 0	0 0 6	0 4 0
271	Poppy-seed, per bag of 2 bazar maunds ...	0 1 0	0 0 6	0 8 0
272	Precious stones, per case	1 0 0	0 8 0	.....
273	Preserves, China and other, per case	0 2 0	0 1 0	0 12 0
274	Provisions (salt), in casks, per cask	0 12 0	0 6 0	3 0 0
275	Pumice stones, per cask	0 4 0	0 2 0	1 0 0
276	Putch leaves, per cwt.	0 1 6	0 0 9	0 8 0
277	Quicksilver, per cwt.	0 4 0	0 2 0	0 8 0
278	Quilts or rezais, per case	0 7 0	0 5 0	3 8 0
279	Quinine, per case	0 2 0	0 1 0	0 12 0
280	Ditto, per cask	0 12 0	0 8 0	5 0 0
281	Rapeseed, per bag of 2 bazar maunds ...	0 1 0	0 0 6	0 8 0
282	Rattans, per cwt.	0 1 0	0 0 6	0 4 0
283	Rice, per bag of 2 bazar maunds	0 1 0	0 0 6	0 8 0
284	Rice-bowls, in casks, per cask	0 6 0	0 4 0	2 8 0
285	Rose leaves, per cwt.	0 2 0	0 1 0	0 6 0
286	Rosin, per cwt.	0 1 6	0 0 9	0 4 0
287	Saddlery	Measurement rates.		
288	Safflower, in screwed bales, per bale	0 4 0	0 2 0	2 0 0

No.	Description.	Wharfage at the Jetties and Docks.	For removal of goods not claimed within 48 hours to the Custom House or Import Warehouse.	Rent per month to be charged at the Import Warehouse, at Wharf, and at Jetty Sheds, on all goods not claimed within 48 hours.
		Rs. A. P.	Rs. A. P.	Rs. A. P.
289	Sago, in cases or bags, per cwt.	0 1 6	0 0 9	0 6 0
290	Saltpetre, in bags, per cwt.	0 0 9	0 0 6	0 6 0
291	Samples, per parcel	0 1 0	0 0 6	0 2 0
292	Ditto, in cases, per case	0 2 0	0 1 0	0 12 0
293	Sandalwood, per cwt.	0 3 0	0 2 0	0 8 0
294	Sandalwood-oil, per jar	1 0 0	0 8 0	5 0 0
295	Sarsaparilla roots, per cwt.	0 2 0	0 1 0	0 4 0
296	Ditto, in cases, per case	0 2 0	0 1 0	0 12 0
297	School slates, per case	0 3 0	0 2 0	1 8 0
298	Screws, jack, per cwt.	0 2 0	0 1 0	0 8 0
299	Seeds of all other kinds not mentioned in the schedules, per bag of 2 bazar maunds ...	0 1 0	0 0 6	0 8 0
300	Senna leaves, per cwt.	0 1 6	0 0 9	0 6 0
301	Sewing-machine, per package	0 6 0	0 4 0	2 8 0
302	Shawls, Cashmere or other, per case	0 4 0	0 3 0	2 0 0
303	Shell-lac or seed-lac, per chest	0 3 0	0 1 6	2 0 0
304	Shovels, per dozen	0 2 6	0 1 3	0 8 0
305	Shuttles, per package	3 0 0	2 0 0	20 0 0
306	Sieves, tea, per dozen	1 0 0	0 8 0	4 0 0
	Silk piece-goods, in cases See piece-goods, silk		Schedule No. 262.	
307	Do. raw, per bale	0 6 0	0 3 0	2 0 0
308	Silver, per box	0 4 0	.....	.....
309	Silver sheets (German), per cwt.	0 1 6	0 0 9	0 4 0
310	Sirocco goods, per cwt.	0 1 6	0 0 9	0 4 0
311	Skins, calf, per 100	0 6 0	0 3 0	2 0 0
312	Do., goat and sheep, per 100	0 1 6	0 0 9	0 6 0
313	Snuff, in cases, per case	0 3 0	0 2 0	1 8 0
314	Soda, per cwt.	0 1 0	0 0 6	0 4 0
315	Soap, per case	0 2 0	0 1 0	0 12 0
316	Do., in cask, per cask	1 4 0	0 12 0	8 0 0
317	Soft soap in cask, per gallon	0 0 3	0 0 2	0 2 0
318	Spices (not in schedule) per cwt.	0 3 0	0 1 6	0 8 0
319	Spelter and solder, per cwt.	0 1 6	0 1 0	0 4 0
320	Spirits, in wood, per Imperial gallon ...	0 0 3	0 0 2	0 2 0
321	Do., bottled, per dozen quarts	0 1 6	0 1 0	0 8 0
322	Stamps or stamp paper, per case	0 4 0	0 3 0	2 0 0
323	Stationery, paper, books, card and pasteboard ...		Measurement rates.	
324	Staves for casks, per bundle	0 1 0	0 0 6	0 2 0
325	Steel (faggot, keg, spring and octagon) per cwt.	0 1 6	0 1 0	0 4 0
326	Stone, sets, per cwt.	0 0 6	.....	.....
327	Stones, in blocks, per cwt.	0 1 6	0 1 6	0 2 0
328	Do., grinding, per cwt.	0 1 6	0 1 9	0 4 0
329	Do., over 2 tons		Charges by weight.	
330	Do., cut or engraved for monumental purposes, per cwt.	0 2 0	0 1 3	0 4 0
331	Sugarcandy, per cwt.	0 1 6	0 0 9	0 6 0
332	Sugar and Khaur, in bags or hogsheads, per ton...	0 12 6	0 10 0	7 8 0
333	Sulphate of copper, per cwt.	0 3 0	0 1 6	0 8 0
334	Talc, per cwt.	0 2 0	0 1 0	0 8 0
335	Tallow, ,, ...	0 4 0	0 2 0	0 8 0
336	Tamarind, ,, ...	0 1 6	0 0 9	0 6 0
337	Tea, in chests, each	0 2 0	0 2 0	0 8 0
338	Do. in ½ or ¼ chest, each	0 1 3	0 1 0	0 4 0
339	Tea chest, Acme, per package	0 6 0	0 4 0	2 8 0
340	Tea shooks, weighing 35 lbs. and under, per bundle or package	0 1 0	0 0 6	0 2 0
341	Tea shooks, weighing 70 lbs. and under, per bundle or package	0 2 0	0 1 0	0 4 0
342	Tea shooks, weighing 100 lbs. and under, per bundle or package	0 3 0	0 2 0	0 12 0
343	Tea shooks, weighing over 100 lbs., per bundle or package	0 4 0	0 3 0	1 4 0
344	Teel seeds, per bag of 2 bazar maunds ...	0 1 0	0 0 6	0 8 0
345	Thread (sewing) or ball cotton, per case ...	0 7 0	0 5 0	3 8 0

No.	Description.	Wharfage at the Jetties and Docks.	For removal of goods not claimed within 48 hours to the Custom House or Import Warehouse.	Rent per month to be charged at the Import Warehouse, at Wharf, and at Jetty Sheds, on all goods not claimed within 48 hours.
		Rs. A. P.	Rs. A. P.	Rs. A. P.
346	Timber, squared, per ton of 50 c. ft.	1 8 0	1 0 0	4 0 0
347	Do., scantling and planks, per ton ...	1 8 0	1 0 0	4 0 0
348	Tin plates, in boxes, per box	0 1 6	0 1 0	0 4 0
349	Tin-blocks, per cwt.	0 1 3	0 1 0	0 6 0
350	Tincal, per cwt.	0 1 0	0 0 6	0 6 0
351	Tissues, per case	0 12 0	0 8 0	5 0 0
352	Tobacco, manufactured	Measurement rates.		
353	Tobacco-leaf, per cwt	0 1 0	0 0 6	0 3 0
354	Tools in chest, per cwt.	0 1 6	0 0 9	0 4 0
355	Treacle, in casks, per cwt.	0 1 0	0 0 6	0 10 0
356	Turmeric, ,, ...	0 1 0	0 0 6	0 10 0
357	Turpentine, in drums, per Imperial gallon ...	0 0 4	0 0 2	0 2 0
358	Ditto, in casks, per ditto ...	0 0 3	0 0 2	0 2 0
359	Twine and lines, per bale	0 8 0	0 4 0	2 0 0
360	Twist and yarn, per package	0 3 0	0 2 0	2 0 0
361	Types, per cwt.	0 2 0	0 1 0	0 4 0
362	Umbrellas, per case	0 4 0	0 3 0	2 0 0
363	Varnish, per cwt.	0 4 0	0 2 0	0 6 0
364	Do., copal, per gallon	0 1 0	0 0 6	0 2 0
365	Venesta tea chest, per package	0 4 0	0 3 0	2 0 0
366	Verdigris, per cwt.	0 3 0	0 1 6	0 8 0
367	Vermilion, per box	0 2 0	0 1 0	0 4 0
368	Vitriol, oil of, per jar	0 8 0	0 4 0	3 0 0
369	Watches, per box	1 0 0	0 8 0	.....
370	Wax, in cases, per case	0 2 0	0 1 0	0 12 0
371	Whiting, per cwt.	0 0 9	0 0 6	0 2 0
372	Wines	See spirits.		
373	Wire, galvanized, telegraph, &c., per cwt. ...	0 2 0	0 1 0	0 4 0
374	Wire-netting, per package	0 2 0	0 1 0	0 12 0
375	Wood, red and sapan, per cwt.	0 1 0	0 0 6	0 4 0
376	Do. lignum vitæ, per cwt.	0 2 0	0 1 0	0 8 0
377	Wood-rollers or bosses, per bundle	0 0 9	0 0 6	0 2 0
	Woollen piece-goods of country or European manufacture See piece-goods, woollen	Schedule No. 263.		
378	Wheat, per bag of 2 bazar maunds	0 1 0	0 0 6	0 8 0
	Charges by Measurement.			
	On all goods not enumerated, if in cases, bales, crates, or casks, and on all goods specified to be charged for by measurement, the rate will be—			
379	If under 3 cubic feet, per package	0 2 0	0 1 0	0 12 0
380	If 3 cubic feet and under 5 cubic feet ,,	0 3 0	0 2 0	1 8 0
381	If 5 ditto ditto 10 ditto ,,	0 4 0	0 3 0	2 0 0
382	If 10 ditto ditto 15 ditto ,,	0 6 0	0 4 0	2 8 0
383	If 15 ditto ditto 20 ditto ,,	0 7 0	0 5 0	3 8 0
384	If 20 ditto ditto 30 ditto ,,	0 12 0	0 8 0	5 0 0
385	If 30 ditto ditto 40 ditto ,,	1 4 0	0 12 0	8 0 0
386	If 40 ditto ditto 50 ditto ,,	2 0 0	1 0 0	12 0 0
387	If 50 ditto ditto 60 ditto ,,	3 0 0	2 0 0	20 0 0
388	If 60 ditto ditto 70 ditto ,,	4 0 0	2 8 0	30 0 0
389	If 70 ditto ditto 80 ditto ,,	5 0 0	3 0 0	36 0 0
390	If 80 ditto ditto 100 ditto ,,	6 0 0	3 8 0	42 0 0
391	If 100 ditto and over	8 0 0	5 0 0	60 0 0
	Charges by Weight.			
392	On all goods not enumerated chargeable by weight, and not exceeding 2 tons, per cwt. ...	0 1 6	0 0 9	0 8 0
393	On all goods exceeding 2 tons and not exceeding 4 tons, per cwt.	0 2 0	0 1 0	0 8 0
394	On all goods exceeding 4 tons and not exceeding 10 tons, per cwt.	0 4 0	0 2 0	0 8 0
395	On all goods exceeding 10 tons, per cwt.	0 8 0	0 4 0	0 8 0

MISCELLANEOUS CHARGES ON IMPORTS.

Charges to vessels for use of Jetty berth.

1. Every vessel, whether working or not, while alongside the Jetties, will be charged Rs. 35 per diem.

Charges for heavy lifts.

2. Scale of charges for use of 100-ton sheers or 30-ton crane:—

	Per cwt. A.	P.
For each lift not exceeding 2 tons	1	6
Ditto exceeding 2 tons, but not exceeding 4 tons ...	2	0
Ditto exceeding 4 tons, but not exceeding 10 tons ...	4	0
Ditto exceeding 10 tons	8	0

Sling charges.

3. When charging for lifts made by the 100-ton sheers or the 30-ton crane, the weight of the sling will be included in the weight of the package and charged for accordingly—

Weight of slings used for heavy lifts.

Weight of the package. Tons.	Old sling weight. Cwt.	qrs.	lbs.	New sling weight. Tons.	cwt.	qrs.	lbs.
5	2	0	0	0	2	0	0
5	1	2	0	.....			
8	2	1	24	0	4	0	0
10	4	3	0	0	3	2	16
10	8	2	0	0	3	3	2
15	.....			0	7	3	16
16	6	0	0	.....			
20	12	3	14	0	12	2	17
30	16	0	0	1	1	1	3
30	14	0	0	0	16	0	0
Shackle and chain	5	0	0				

Minimum charge for use of 100-ton sheers or 30-ton crane.

4. The minimum charge for use of the 100-ton sheers or the 30-ton crane is Rs. 50.

Additional charge for 30-ton crane.

5. When the crane vessel is required to make lifts at any place within the port, either above the Howrah Bridge or below the Kidderpore Dock, an additional charge of Rs. 50 per day will be made.

Overtime for 100-ton sheers or 30-ton crane.

6. When the 100-ton sheers or the 30-ton crane is required to make a lift after 6 P.M., a fee of Rs. 10 per hour will be charged for overtime.

Consignees to load carts.

7. Consignees must provide coolies for loading carts.

Weighing charges.

8. The charge for weighing goods will be one-third of the landing charge.

Use of cranes for loading carts and trucks.

9. A hoisting charge, equivalent to one-third of the landing charges, will be levied for the use of handcranes by consignees of goods for loading carts or trucks at the Jetties and Docks.

Delivery into boats.

10. *Discharged Overside.*—Goods hoisted by the hydraulic cranes on to the deck of a vessel and lowered from the deck into boats by the vessel's gear on the water side, or direct by the hydraulic cranes ex-holds into boats, are charged one-third of the landing charges, except in the case of rails and iron sleepers, the charge on which is one-fifth of the landing charges.

Direct delivery into boats.

11. *Landed and Reshipped direct.*—Goods for overside landed on trollies on the Docks or Jetties by one crane trollied to another and reshipped into boats direct, will be charged single landing rates.

Reshipment goods.

12. *Landed and Reshipped.*—Goods for overside landed on the Docks or Jetties and afterwards reshipped will be charged double landing rates.

Transhipment goods.

13. *Landed and Transhipped.*—Goods for transhipment landed on the Docks or Jetties and afterwards reshipped will be charged one-and-a-third landing rates.

Wharf rent when incurred.

14. No charge for wharf rent will be made until the fourth day after landing, *e.g.* goods landed on Monday will not be liable to wharf rent if removed before Thursday evening; and no charge for wharf rent will be made for holidays, when, owing to the Custom House being shut, consignees are unable, without any fault on their part, to clear their goods. Sundays and holidays will be exempted from rent, unless the goods have already incurred rent, in which case Sundays and holidays are included.

Late entry of vessels.

15. When a vessel is entered at the Custom House after 2 P.M. on week days or after 1 P.M. on Saturday, in calculating Wharf rent the cargo she discharges either on or before the day of her entry will be considered as landed on the next working day.

Wharf rent on damaged goods.

16. Damaged goods, for which a claim is brought against the ship, will not be charged wharf rent until the fifth day after landing, provided notice of survey is given to the Dock or Jetty Superintendent, as the case may be, within 48 hours after the goods have been received from the ship.

Wharf rent on reshipment goods (ship's account).

17. No charge for wharf rent on reshipment goods will be made until the fifth day after landing, provided the charges are to be debited against the vessel's account.

18. No charge for wharf rent on transhipment goods will be made until the fourteenth day after landing. Wharf rent on transhipment goods.

19 The wharf rent on Railway and Warehouse goods will be charged up to the date of the submission of complete papers. Wharf rent on Railway and Warehouse goods.

20. In cases of wines free allowance of three clear days will be granted after the date of their removal to the Import Warehouse, but if they are once subject to rent, they are to be treated as ordinary goods, and wharf rent and removal charges will be levied from the date of their landing, after allowing the usual days of grace. Wharf rent on wines.

21. Goods which can be loaded by manual labour for direct despatch upcountry, will be loaded into foreign wagons free of cost, but if loaded into local wagons will be charged one-third of landing. Goods for upcountry by foreign wagons and loading local wagons.

22. Goods for the Commissioners' warehouses will be transferred from the transit sheds and unloaded free of cost. If such goods are not taken delivery of within 24 hours, wagon demurrage will be charged at the rate of As. 6 per wagon per hour. Warehouse goods and wagon demurrage.

23. Goods transferred from transit sheds to the import warehouse and subject to wharf rent are liable to removal charges. Removal charges.

24. Removal charges are also to be made on goods returned from gates and put into the import warehouse, whether subject to wharf rent or not. Removal charges on goods returned from gate.

25. An advertising fee of As. 6 for each item will be charged on goods advertised Advertising fees.

26. Charges for the Commissioners' articles— Charges for the Commissioners' articles.

			Rs.	A.
Tubs	...	each	1	0
Platforms	...	,,	2	0
Handtrucks	...	,,	2	0
Gangways	...	,,	0	8
Tally-books	...	,,	1	8

27. A fee of Re. 1 will be charged for issuing a duplicate gate pass or for a certificate of receipt. Fee for duplicate gate pass and receipt.

28. A fee of Rs. 2 per hour will be charged for passing out cargo before 10 A.M. and after 6. P.M. Overtime fee.

29. Kentledge can be supplied for vessels requiring stiffening, especially at Budge-Budge, at the following rates:— Hire of kentledge.

Hire for one month—As. 8 per ton of 21 pieces.

Subsequent months—As. 4 per ton of 21 pieces per month.

	Rs.
Boat hire to Budge-Budge ...	... 25
Towage ...	... 50

NIGHT WORK.

30. Charge for each crane per hour between 6 P.M. and 6 A.M., covering cost of all other services rendered— Crane charge for night work.

	Imports. Rs.	A.
Three cranes or less ...	... 5	8
Four ...	... 5	0
Five or more	... 4	8

31. The above charges are subject to a minimum of Rs. 80 for half a night, but if more than one vessel is working at night, the sum of their charges may go to make up the minimum. For instance, if two vessels were working one crane each for six hours on import cargo, then the charges under the Schedule would be for each vessel Rs. 33, but under the minimum rule they would each have to pay Rs. 40. If only one vessel is working, she must pay not less than Rs. 80 for the half night.

32. A vessel supplied with electric light for deck and holds will be charged Rs. 7-8 from dark to midnight, and Rs 7-8 from midnight to daylight. Charge for electric light.

33. Rate for haulage of cranes from Jetties to any point on the Port Trust Railway and back— Hauling charge of crane.

	Rs.
6-ton crane	... 15
10- ,, ,, ...	... 25

34. Gross weight on all goods, except metal, red and white lead, will be charged. Gross and nett weight.

SURVEY OF INDIA DEPARTMENT.

MAP RECORD AND ISSUE OFFICE.

Agents for sale of Maps.

LONDON.—Mr. Edward Standford, 26 & 27 Cockspur Street, Charing Cross, London, S.W.
CALCUTTA.—No Agent. Maps can be obtained from the Office, 13 Wood Street.
ALLAHABAD.—Superintendent, Government Press.
ASSAM.—Babu J. N. Barua for maps of Assam only.
BOMBAY.—Messrs. Thacker & Co.
LAHORE.—Rai Sahib Munshi Gulab Sing and Sons, Government Publishers and Booksellers.
MADRAS.—Messrs. Higginbotham & Co.
MANDALAY.—The Manager, Mandalay Herald Press.
MUSSOOREE.—The Mussooree Book Society, Baring Institute.
POONA.—Supdt., Government Photo-Zincographic Dept.
RAJKOT.—The Treasury Officer.
SIMLA.—Messrs. Cotton & Morris; The Exchange.

The following Catalogues of maps are available at annas six per copy :—

1. Assam.
2. Atlas of India.
3. Bengal Presidency.
4. Berar or the Hyderabad Assigned Districts and the Nizam's Dominions.
5. Bombay Presidency.
6. Burma.
7. Central India and Rajputana Agencies.
8. Central Provinces.
9. India and Adjacent Countries.
10. Madras Presidency.
11. Punjab.
12. United Provinces of Agra and Oudh.

All published maps are sold at the Survey of India Office, Calcutta, for cash *prepaid*.
Agents cannot issue maps on the *Public Service, except on cash payment.*

Maps published at the Head-Quarter Offices, Calcutta and Dehra Dun, for the quarter ending the 31st March 1902.

TITLE.	Date of Survey.	Scale.	Number of sheets.	Size of sheet.	PRICE OF MAP UNMOUNTED.		REMARKS.
					Uncoloured.	Coloured.	
					Rs. A.	Rs. A.	
ATLAS OF INDIA.							
Sheet No. 1 S.E.	.....	1″ = 4 M.	1	27″ × 20″	0 12	0 14	With additions and corrections to 1897.
„ „ 78 N.E.	.....	do.	do.	do.	do.	do.	With additions to Railways to 1899.
„ „ 128 N. E.	.....	do.	do.	do.	do.	do.	With additions to 1898.
Sheets Nos. 22 S.W. & 69 S. E. ...	.....	do.	2	do. each	do. each.	do. each.	With additions to 1899.
Sheet No. 102	... ..	do.	1	40″ × 27″	2 0	2 4	Ditto.
„ „ 103 „ ...	... ..	do.	do.	do.	do.	do.	With additions to 1900.
GENERAL MAPS.							
India (Skeleton)	.. ...	1″ = 128 M.	do.	32″ × 27″	1 12	2 0	Engraved with additions to 1901.
PROVINCIAL MAPS.							
Burma and adjacent Countries	.....	1″ = 32 M.	2	40″ × 27″ each.	3 0 per set.	3 8 per set.	2nd Edition; with additions to 1901.
Central India Agency	.. ...	1″ = 16 M.	do.	37″ × 28″ each.	4 0 per set.	5 0 per set.	Engraved: with hills, with additions and corrections to 1901.
United Provinces of Agra and Oudh	.....	do.	do.	40″ × 25″ each.	2 0 per set.	2 8 per set.	With additions to 1901.
DISTRICT MAPS.							
Surat ... ... „	.....	1″ = 4 M.	1	31″ × 22″	1 0	1 4	

MAPS OF THE SURVEY OF INDIA DEPARTMENT—*continued.*

TITLE.	Date of Survey.	Scale.	Number of sheets.	Size of sheet.	PRICE OF MAP UNMOUNTED.		REMARKS.
					Uncoloured.	Coloured.	
STANDARD MAPS					Rs. A.	Rs. A.	
Assam—							
Sheet No. 8	1896—98	1" = 1 M.	1	40" × 27"	1 8	1 12	Preliminary Edition.
„ „ 18	1896-97	do.	do	do.	do.	do.	Ditto.
„ „ 49	1896—9[illegible]	do.	do.	do.	do.	do.	Ditto.
„ „ 52	1887—9[illegible]	do.	do.	do.	do.	do.	Ditto.
„ „ 62	1887—98	do.	do.	do.	do.	do.	Ditto.
„ „ 63	1887—9[illegible]	do.	do.	do.	do.	do.	Ditto.
„ „ (38 and portion of 37) in one.	1885—97	do.	do.	do.	do.	do.	2nd Preliminary Edition.
Bengal—							
Sheet No. 111	1895-96	do.	do.	do.	do.	do.	
„ „ 163	1894-95	do.	do.	do.	do.	do.	
„ „ 143	1895-86 & 1893—95	do.	do.	do.	do.	do.	Preliminary Edition.
„ „ (285 and portion of No. 308) in one.	1869-70	do.	do.	do.	do.	do.	With additions and corrections to 1899.
Bombay—							
Sheet No. 135	1884-85	do.	do.	do.	do.	do.	
„ „ 277	1887—89	do.	do.	do.	do	do.	
„ „ 139	1880-81	do.	do.	do.	do.	do.	With additions and corrections to September 1901.
„ „ 164	1880-81	do.	do.	do.	do.	do.	Corrections to May 1897.
„ „ 204	1892-93	do.	do.	do.	do.	do.	Corrections to June 1899.
„ „ 233	1873-74	do.	do.	do.	do.	do.	With additions and corrections to Railways to December 1890.
„ „ 134 $\frac{S.E.}{1}$ ...	1884-85	4" = 1 M.	do.	do.	do.	do.	Preliminary Edition with additions and corrections to February 1898.
„ „ 134 $\frac{S.E.}{3}$ ...	1884-85	do.	do.	do.	do.	do.	Preliminary Edition.
Burma—							
Sheet No. 125	1879-80	1" = 1 M.	do.	do.	do.	do.	
„ „ 240	1890-91 & 1897—1900	do.	do.	do.	do.	do.	
„ „ 436	1899—1900	do.	do.	do.	do.	do.	
„ „ 191	1892—96	do.	do.	do.	do.	do.	Preliminary Edition.
„ „ 305	1895-98	do.	do.	do.	do.	do.	2nd Edition.
„ „ 307	1881 & 1884 & 1894—97	do.	do.	do.	do.	do.	Ditto.
United Provinces of Agra & Oudh,—							
Sheet No. 27	1863—83	do.	do.	do.	do.	do.	Ditto.

MAPS OF THE SURVEY OF INDIA DEPARTMENT—*continued.*

TITLE.	Date of Survey.	Scale.	Number of sheets.	Size of sheet.	PRICE OF MAP UNMOUNTED.		REMARKS.
					Uncoloured.	Coloured.	
					Rs. A.	Rs. A.	
STANDARD MAPS—*concluded.*							
United Provinces of Agra & Oudh—*concluded.*							
Sheet No. 23	1872—74 & 1883-84	1″ = 1 M.	1	40″ × 27″	1 8	1 12	With additions to Railways to June 1899.
,, ,, 35	1882-83	do.	do.	do.	do.	do.	With additions and corrections to January 1899.
,, ,, 38	1872—73	do.	do.	do.	do.	do.	With additions and corrections to December 1896.
,, ,, 70	1895—97	do.	do.	do.	do.	do.	Preliminary Edition.
North-Eastern Frontier,—							
Sheet No. 22 S. W. ...	1887—92 & 1895-96 1883—86	1″ = 4 M.	do.	do.	do.	do.	3rd Edition.
South-Eastern Frontier,—							
Sheet No. 4 S. W.	1886—93	do.	do.	do.	do.	do.	7th Edition.
PLANS OF CITIES AND CANTONMENTS.							
Bhagalpur Civil Station, City, and Environs.	1866-67 & 1869-70	6″ = 1 M.	do.	44″ × 30″	do.	do.	2nd Edition.
Calcutta,—							
Sheet No. L. 3	887—92	50 ft. = 1″	do.	40″ × 25″	do.	do.	2nd Edition.
,, ,, L. 4	do.	do.	do.	do.	do.	do.	Ditto.
,, ,, M. 3	1887—93	do.	do.	do.	do.	do.	Ditto.
,, ,, M. 4	do.	do.	do.	do.	do.	do.	Ditto.
,, ,, M. 9	887—92	do.	do.	do.	do.	do.	Ditto.
,, ,, N. 8	1887—93	do.	do.	do.	do.	do.	Ditto.
,, ,, N. 9	do.	do	do	do.	do.	do.	Ditto.
,, ,, N. 12	887—92	do.	do.	do.	do.	do.	Ditto.
,, ,, O. 17	do.	do.	do.	do.	do.	do.	Ditto.
,, ,, O. 18	do.	do.	do.	do.	do.	do.	Ditto.
,, ,, O. 19	do.	do.	do.	do.	do.	do.	Ditto.
,, ,, O. 20	do.	do.	do.	do.	do.	do.	Ditto.
,, ,, P. 19	do.	do.	do.	do.	do.	do.	Ditto.
,, ,, P. 20	do.	do.	do.	do.	do.	do.	Ditto.
,, ,, P. 25	do.	do	do.	do.	do.	do.	Ditto.
,, ,, Q 22	do.	do.	do.	do.	do.	do.	Ditto.
,, ,, Q. 23	do.	do.	do.	do.	do.	do.	Ditto.
,, ,, Q 24	do.	do.	do.	do.	do.	do.	Ditto.
ADMINISTRATION REPORT MAPS.							
Raipur (Central Provinces) ...	... ...	1″ = 20 M.	do.	15″ × 10″	0 6	.....	Engraved.
INDEX MAPS.							
To the Standard Sheets of Bengal	.....	.....	do.	17″ × 14″	.....	0 4	With additions to 1901.
Ditto Bombay	.....	.....	do.	do.	.....	do.	Ditto.
Ditto of the Punjab and N.-W. Frontier Province.	.....	.....	do.	do.	.....	do.	Ditto.
MISCELLANEOUS MAPS.							
Madras Forests—							
Kollimalai Hills Reserved Forests, Sheet No. 6.	1897-98	4″ = 1 M.	do.	40″ × 27″	1 8	1 12	
No. 82, Kavuramalai; and No. 99, Kavuramalai Extension Reserved Forests, Uttangari Taluk, Salem District.	do.	do.	do.	42″ × 27″	do.	do.	

MAPS OF THE SURVEY OF INDIA DEPARTMENT—*continued.*

TITLE.	Date of Survey.	Scale.	Number of sheets.	Size of sheet.	PRICE OF MAP UNMOUNTED.		REMARKS.
					Uncoloured	Coloured.	
MISCELLANEOUS MAPS—*concluded.*					Rs. A.	Rs. A.	
Madras Forests—*concluded.*							
Kollimalai Hills Reserved Forests, Attur & Namakhal Taluks, Salem District, Sheet No. 2.	1900	4″ = 1 M.	1	40″ × 27″	1 0	1 4	
Lankamalai & Kanchalamoram Reserved Forests, Sheet No. 4	1898-99	do.	do.	do.	do.	do.	
Nos. VII, VIII, & XII, Pambukallar, Kokuparai Kollar Reserved Forests, Palni Taluk, Madura District.	1890-91	do.	do.	do.	do.	do.	
No. 5, Pakkammalai; No. 6 Gangavaram; and No. 68, Pulanjimalai Reserved Forests, and Turinjikadu Proposed Reserved, Tindivanam & Villupuram Taluks, South Arcot District, Sheets 1, 2, & 3.	1897—99	do.	3	do. each.	do. each.	do. each.	
Maymayo and surrounding countries.	.....	1″ = 1 M.	1	34″ × 26″	do.	do.	
CHARTS.							
Chart of Triangulation of No. 20 Party, Sheet No. 253.	1891—93	do.	do.	30″ × 22″	do.	.....	
Do. Do. Sheet No. 255 (Burma)	1885—92	do.	do.	do.	do.	.....	
Do. do. (Burma Forests), Sheet No. 258, New Series.	1882—96	do.	1	22″ × 15″	do.	.....	
MAPS PUBLISHED AT THE DEHRA OFFICE.							
STANDARD SHEETS.							
Punjab—							
Sheet No. 310 N. W. ...	.....	2″ = 1 M.	1	40″ × 27″	1 8	1 12	
„ „ 310 S. W. ...	1895—97	do.	do.	do.	do.	do.	
„ „ 335 N. E. ...	.....	do.	do.	do.	do.	do.	
Sind—							
Sheet. No. 21	.....	1″ = 1 M.	do.	do.	do.	do.	
„ „ 67 S.W.	1896-97	2″ = 1 M.	do.	do.	do.	do.	
PLANS OF CITIES AND CANTONMENTS.							
Karachi Cantonment	1900—1901	12″ = 1 M.	3	40″ × 27″ each.	2 0	2 8	
INDEX MAPS.							
Index to Sind Khairpur State Boundary Survey.	1899-1900	1″ = 2 M.	1	do.	.....	.....	
Do. do. Nos. 12 and 15 Parties.	1900-01	1″ = 50 M.	do.	14″ × 19″	.....	.....	
Do. do. Operations in the Himalaya, No. 18 Party.	do.	1″ = 20 M.	do.	17″ × 14″	.....	.....	
PUBLISHED AND AVAILABLE FROM THE FOREST SURVEY DEPARTMENT, DEHRA DUN.							
STANDARD MAPS.							
Burma—							
Sheet No. 258 $\frac{N.W.}{2}$ ...	.....	4″ = 1M.	1	40″ × 27″	1 8	1 12	
„ „ 258 $\frac{S.E.}{3}$ ...	.....	do.	do.	do.	do.	do.	2nd Edition.
„ „ 258 $\frac{S.E.}{4}$ ...	.....	do.	do.	do.	do.	do.	Ditto.

MAPS OF THE SURVEY OF INDIA DEPARTMENT—*continued.*

TITLE.	Date of Survey.	Scale.	Number of sheets.	Size of sheet.	PRICE OF MAP UNMOUNTED		REMARKS.
					Uncoloured.	Coloured.	
					Rs. A.	Rs. A.	
PUBLISHED AND AVAILABLE FROM THE FOREST SURVEY DEPARTMENT, DEHRA DUN—*continued.*							
STANDARD MAPS—*continued.*							
Burma—*continued.*							
Sheet No. 259 S.E./2 ...	.....	4″ = 1M	1	40″ × 27″	1 8	1 12	
,, ,, 259 S.E./3 ...	.....	do.	do.	do.	do.	do.	
,, ,, 259 S.E./4 ...	.....	do.	do.	do.	do.	do.	
,, ,, 260 N.E./1 ...	.....	do.	do.	do.	do.	do.	
,, ,, 260 N.E./2 ...	.....	do.	do.	do.	do.	do.	
,, ,, 260 N.E./4 ...	.....	do.	do.	do.	do.	do.	
,, ,, 260 S.E./2 ...	.....	do.	do.	do.	do.	do.	
,, ,, 301 S.W./1 & 2 ...	.....	do.	do.	do.	do.	do.	
,, ,, 302 N.W./2 ...	.....	do.	do.	do.	do.	do.	
,, ,, (302 S.E./3, 302 S.E./4, & 302 S.W./4) in one.	.....	do.	do.	do.	do.	do.	
Sheet No. (302 S.E./1 & 302 S.W./2) in one.	.....	do.	do.	do.	do.	do.	
Sheet No. 303 N.E./3 ...	.....	do.	do.	do.	do.	do.	
,, ,, 306 S.W./1 ...	.....	do.	do.	do.	do.	do.	
,, ,, 306 N.W./3 ...	.....	do.	do.	do.	do.	do.	
,, ,, (308 N.E./3 & 308 N.E./4) in one.	.....	do.	do.	do.	do.	do.	
Sheet No. 308 S.W./2 ...	.....	do.	do.	do.	do.	do.	
,, ,, 350 S.E./2 ...	.....	do.	do.	do.	do.	do.	
,, ,, 351 N.E./3 & 4 ...	.....	do.	do.	do.	do.	do.	
,, ,, 353 S.E./3 ...	.....	do.	do.	do.	do.	do.	
,, ,, 397 S.E./3 ...	.....	do.	do.	do.	do.	do.	
,, ,, 397 S.W./4 ...	.....	do.	do.	do.	do.	do.	

MAPS OF THE SURVEY OF INDIA DEPARTMENT—*continued.*

TITLE.	Date of Survey	Scale.	Number of sheets.	Size of sheet.	PRICE OF MAP UNMOUNTED.		REMARKS.
					Uncoloured.	Coloured.	
					Rs. A.	Rs. A.	
PUBLISHED AND AVAILABLE FROM THE FOREST SURVEY DEPARTMENT, DEHRA DUN—*continued.*							
STANDARD MAPS—*continued.*							
Burma—*concluded.*							
Sheet No. 462 S.E./1 ...	.....	4" = 1 M.	1	42" × 27"	1 8	1 12	
,, ,, 462 S.E./3 ...	.....	do.	do.	do.	do.	do.	
,, ,, 481 S.W./2 ...	.....	do.	do.	do.	do.	do.	
,, ,, (307 S.W./4, 308 N.W./2 & 308 N.E./1 & 3) in one.	.....	do.	do.	33" × 25"	1 0	1 4	
Sheet No. 282 N.W./1 ...	.....	do.	do.	do.	do.	do.	
,, ,, 262 N.W./1, 2 & 3 ...	.....	do.	do.	do.	do.	do.	
,, ,, 282 N.W./3 ...	.....	do.	do.	27" × 25"	do.	do.	
,, ,, (283 N.W./4 & 283 S.W./2) in one.	.....	do.	do.	25" × 20"	do.	do.	
Sheet No. 282 S.E./1 ...	.....	do.	do.	do.	do	do	
Attaram—							
Sheet No. 461 N.E./1 & 3 ...	.....	do.	do.	42" × 26"	1 8	1 12	
,, ,, 461 N.E./2 & 4 ...	.....	do.	do.	do.	do.	do.	
Central Provinces—							
Sheet No. 43 N.E./3, district Saugor	.....	do.	do.	40" × 27"	do.	do.	
,, ,, 31 S.E./2, ditto ...	.....	do.	do.	do	do.	do.	
,, ,, 45 S.E./1, ditto ...	.....	do.	do.	do.	do.	do.	
,, ,, 43 N.W./3, ditto ...	.....	do.	do.	do.	do.	do.	
,, ,, 44 N.W./1, ditto ...	.....	do.	do.	do.	do.	do.	
,, ,, 44 N.W./2, ditto ...	.....	do.	do.	do.	do.	do.	
,, ,, 44 S.W./2, ditto ...	.....	do.	do.	do.	do.	do.	
,, ,, 44 S.E./2, ditto ...	.....	do.	do.	do.	do.	do.	

MAPS OF THE SURVEY OF INDIA DEPARTMENT—*continued.*

TITLE.	Date of Survey.	Scale.	Number of sheets.	Size of sheet.	PRICE OF MAP UNMOUNTED		REMARKS.
					Uncoloured.	Coloured.	
					Rs. A.	Rs. A.	
PUBLISHED AND AVAILABLE FROM THE FOREST SURVEY DEPARTMENT, DEHRA DUN—*continued.*							
STANDARD MAPS—*continued.*							
Central Provinces—*concluded.*							
Sheet No. 44 $\frac{S.W}{3}$, district Saugor	.....	4″ = 1M.	1	40″ × 27″	1 8	1 12	
,, ,, 61 $\frac{S.W.}{4}$, ditto ...	.....	do.	do.	do.	do.	do.	
,, ,, 44 $\frac{N.W.}{3}$, ditto ...	.....	do.	do.	27″ × 25″	1 0	1 4	
,, ,, 51 $\frac{S.E.}{4}$, district Chindwara.	.. ...	do.	do.	40″ × 25″	1 8	1 12	
Sheet No. 52 $\frac{N.E.}{4}$, district Chindwara.	.....	do.	do.	do.	do.	do.	
Sheet No. 69 $\frac{N.W.}{4}$, district Chindwara.	.....	do.	do.	23″ × 25″	1 0	1 4	
Sheet No 70 $\frac{N.E.}{3}$, district Chindwara.	.. ...	do.	do.	do.	do.	do.	
Sheet No. 70 $\frac{N.W.}{3}$, district Chindwara.	.. ...	do.	do.	do.	do.	do.	
Sheet No 71 $\frac{N.E.}{2}$, district Seoni	.....	do.	do.	40″ × 25″	1 8	1 12	
,, ,, 89 $\frac{S.W.}{1}$, ditto ...	.....	do.	do.	do.	do.	do.	
,, ,, 88 $\frac{S.E.}{2}$, ditto ...	.....	do.	do.	25″ × 20″	1 0	1 4	
,, ,, 111 $\frac{S.W.}{2}$, ditto ...	.....	do.	do.	do.	do.	do.	
,, ,, 205 $\frac{N.E.}{4}$, district Raipur.	.....	do.	do.	40′ × 27″	1 8	1 12	
Sheet No. 253 $\frac{S.E.}{2}$, district Sambalpur.	.....	do.	do.	25″ × 17″	1 0	1 4	
Sheet No. $\left(262 \frac{S.W}{3}\right.$ & 262 $\left.\frac{S.W.}{4}\right)$ in one ditto.	.....	do.	do.	27″ × 28″	do.	do.	
Punjab—							
Sheet No. 333 $\frac{N.W.}{3}$, district Bashahr.	.....	do.	do.	40″ × 25″	1 8	1 12	
Sheet No. 351 $\frac{S.W.}{4}$, district Bashahr.	.....	do.	do.	do.	do.	do.	

MAPS OF THE SURVEY OF INDIA DEPARTMENT—*concluded.*

TITLE.	Date of Survey.	Scale.	Number of sheets.	Size of sheets.	PRICE OF MAP UNMOUNTED.		REMARKS.
					Uncoloured.	Coloured.	
					Rs. A.	Rs. A.	
PUBLISHED AND AVAILABLE FROM THE FOREST SURVEY DEPARTMENT, DEHRA DUN—*concluded.*							
STANDARD MAPS—*concluded.*							
Punjab—*concluded.*							
Sheet No. (244 *a*, S.E./1 & 244 S.W./2), in one, district Chamba	.....	4″ = 1M.	1	41″ × 27″	1 8	1 12	
Ajmer-Merwara—							
Sheet No. 198 N.E/1 ...	.....	do.	do.	40″ × 27″	do.	do.	

J. M. FLEMING, *Major*, R.E.,
Offg. Asst. Surveyor-General.
In charge, Map Record and Issue Office.

SURVEY OF INDIA DEPARTMENT,
MAP RECORD AND ISSUE OFFICE,
Calcutta, 1st April 1902.

FORM (2).

[GENERAL INSTRUCTION 16.]

APPENDIX F.

Abstract of the Partition Fund of the district of Darbhanga for the year 1901-1902, prepared as required by Act V (B.C.) of 1897, section 42.

RECEIPTS.	Rs. A. P.	DISBURSEMENTS.	Rs. A. P.
Balance in hand on 1st April 1901 ...	24,101 12 2	Contribution towards establishments employed in the Commissioner's office under section 36 of the Act ...	387 0 0
Received on account of estate ...	10,172 1 1	Salary of Deputy Collector employed under section 41 of the Act ...	1,666 14 11
		For his pension contribution ...	345 0 0
		For his travelling allowance ...	54 7 0
		Salary of district establishment employed under section 36 of the Act ...	1,224 1 10
		For pension contribution of ditto ...	5 4 0
		For travelling allowance of ditto ...	63 14 6
		Cost of establishments employed under section 35 of the Act	1,093 8 8
		Refund of partition cost	432 1 2
		Contingent expenditure	3,450 15 0
		Purchase of court-fee stamps on account of talbana	354 0 0
		Cost of stamps	1,480 0 0
		Cost of boundary marks	750 0 0
		Cost of audit	.....
		Balance in hand on 31st March 1902 ...	22,976 10 2
Total ...	34,273 13 3	Total ...	34,273 13 3

S. L. MADDOX,
Collector.

BATWARA DEPARTMENT, DARBHANGA COLLECTORATE, *the 27th June 1902.*

(330—1)

SALE NOTIFICATION.

In the Court of Rai Kali Kumar Bose Bahadur, Subordinate Judge, 1st Court, 24-Parganas.

EXECUTION CASE No. 74 OF 1902.

Sreemoty Parul Sundari Dasi, certificated guardian and mother of minor Khokalal Mitter, decree-holder, *versus* Surendra Nath Ghose and others, of Jagatdal, Rajpore, police-station Sonarpore, district 24-Parganas, judgment-debtors.

ALL the right, title and interest whatsoever in the 16 annas share of the above judgment-debtors in the following properties will be sold, subject to the prior encumbrances noted below, by the Nazir of the District Judge, 24-Parganas, at Alipore at 12 o'clock (noon) on the 14th of July 1902, for the realization of Rs. 42,701-14-8 due on the mortgage decree under execution:—

Schedule of Properties.

1. All that brick-built dwelling-house, together with the piece and parcel of rent-free land thereunto belonging and on part whereof the same is erected and built, containing by estimation 25 bighas, situate, lying and being in mauza or village Jagatdal, in the registration district of 24-Parganas, subdistrict Behala, thana Sonarpore, pargana Magura, butted and bounded as follows:—On the north by public road and partly by the garden of Woomesh Chunder Roy, and on the south by a public road called Daru Road, and on the east by Baruipore Road, and on the west by the land of Saroda Mookerjee recently purchased by Girish Chunder Roy.

Approximate value Rs. 500.

2. All that right, title and interest whatsoever in that zamindari or taluk called Dayaram Dhoniram, being the No. 1730 in the Collectorate of zilla Backergunge in pargana Jafarabad Rullinagore in Chandradwip pargana, and sitituate in the registration district of Backergunge, subdistrict Goolsikhali, thana Goolsikhali, and in respect of which the yearly sum of Rs. 322-6-6 is payable as Government revenue. Its present jurisdiction is thana and sub-registration Golachipa, subdivision Patuakhali.

Approximate value Rs. 9,000.

3. All that right, title and interest whatsoever in that zamindari or taluk called Madan Mohan Ghose, and bearing the tauzi No. 1745 in the Collectorate of zilla Backergunge, in the registration district of Backergunge, subdistrict Goolsikhali, and in respect of which the yearly sum of Rs. 322-6-6 is payable as Government revenue. Its present jurisdiction is thana and sub-registration Golachipa, subdivision Patuakhali, pargana Chandradwip.

Approximate value Rs. 9,000.

4. All that right, title and interest whatsoever in that zamindari or taluk called Dordoura Khanum, bearing the tauzi No 3205, in the Collectorate of zilla Backergunge, situate in pargana Golachipa in the registration district of Backergunge, sub-registration Golachipa, and in respect of which the yearly sum of Rs. 119-4-6 is payable as Government revenue. Its present jurisdiction is pargana Mamhari char taraf, thana and sub-registration Golachipa, subdivision Patuakhali.

Approximate value of lots 4 and 8 together Rs. 500.

5. All that right, title and interest whatsoever in that zamindari or taluk called taluk Goluk Nath Ghose mauza Keobonia, pargana Arangpore (Dariabad), bearing tauzi No. 4554, in the Collectorate of zilla Backergunge registration district of Backergunge, sub registration district Goolsikhali, thana Goolsikhali, and in respect of which the yearly sum of Rs. 1,321-1-3 is payable as Government revenue. Its present jurisdiction is thana Amtali, subdivision Patuakhali.

Approximate value Rs. 1,000.

6. All that right, title and interest whatsoever in that zamindari or taluk called osut taluk Jogodamba, pargana Arangpore, Goolsikhali, Borabighai, Dhariabad and in the registration district of Backergunge, sub-district Goolsikhali, thana Goolsikhali, bearing the tauzi No. 4556, in the Collectorate of zilla Backergunge, and in respect of which the yearly sum of Rs. 1,474-10 is payable as Government revenue. Its present jurisdiction is thana Amtali, sub-registration Goolsikhali, subdivision Patuakhali.

Approximate value Rs. 2,000.

7. All that right, title and interest whatsoever in that zamindari or taluk called taluk Pasaribonia, Goluk Nath Ghose, pargana Arangpore, Goolsikhali division in the registration district of Backergunge, subdistrict Goolsikhali, thana Goolsikhali, bearing the tauzi No. 4728, in the Collectorate of Backergunge, and in respect of which the yearly sum of Rs. 462-12-6 is payable as Government revenue. Its present jurisdiction is sub-registration Goolsikhali, outpost Mrijagunge, subdivision Patuakhali.

Approximate value Rs. 500.

8. All that right, title and interest whatsoever in that undivided 10 annas 15 gandas share of all that zamindari or taluk called Krity Churn Das and Robi Lochan Das, in the registration district of Backergunge, sub-registration district Golachipa, thana Golachipa, and bearing the tauzi No. 2048 in the Collectorate of zilla Backergunge, and in respect of which the yearly sum of Rs. 1,846-10-8 is payable as Government revenue for the entire 16 annas share of this estate, whereas Rs. 1,038-10-6 is payable as Government revenue of the 10 annas 15 gandas share of the judgment-debtors.

The approximate value of properties Nos. 4 and 8 together Rs. 500.

N.B.—Incumbrances.—The 8 annas share of the properties Nos. 2, 3, 5 and 6 as described above in the schedule, belonging to the judgment-debtor, Surendra Nath Ghose, was mortgaged to defendant No. 2, Sreemoty Saroda Sundori Chaudhurani, for Rs. 12,000 at a mothly interest of one rupee three annas per hundred by a mortgage deed dated the 4th of April 1883. This mortgage was redeemed by the father of this decree-holder, Babu Lal Behari Mittra, deceased, on the 24th of March 1900, but the above Sreemoty Saroda Sundari Chaudhurani, being dissatisfied with the amount of interest allowed by the Lower Court and which was realized by the redemption, preferred an appeal to the Hon'ble High Court for that portion of interest disallowed by the Lower Court, and that appeal is still pending in the Hon'ble High Court and is numbered as 119 of 1900.

And the entire 8 annas share of the above judgment-debtor, Surendra Nath Ghose, in all the properties mentioned in the schedule was also mortgaged along with other properties to defendant No. 3, Sreemoty Burno Coomari Debi, for Rs. 5,000 at an interest at Rs. 12 per cent per annum by a mortgage deed dated the 17th of July 1894. And the said Sreemoty Burno Coomari Debi obtained a decree for the amount due to her on the mortgage in suit No. 107 of 1899 of this Court and has instituted execution proceeding in Execution Case No. 98 of 1902 of this Court.

The other 8 annas share of all the properties described in the schedule mentioned above belonging to judgment debtor Monindra Nath Ghose, deceased, was mortgaged to defendant No. 4, Babu Khetter Mohan Dutt, for Rs. 2,000 at an interest at Rs. 12 per cent. per annum, and that his 8 annas share in all the above properties mentioned in the schedule was mortgaged to defendant No. 5, Babu Bepin Behary Mitra, for Rs. 20,000, at an interest at Rs. 11 per cent. per annum by a mortgage deed dated the 22nd of May 1895.

And that is entire 8 annas share in all the above properties mentioned in the schedule was also mortgaged to defendant No 6, Babu Mohendra Chundra Mitra, for Rs. 5,000 at an interest at Rs. 12 per cent. per annum by a mortgage deed dated the 22nd of May 1895.

The total amount of the incumbrances, including interest, &c., is about Rs. 85,000 to Rs. 90,000, and that interest has still been running on the mortgage-debt.

KALI KUMAR BOSE, Subordinate Judge, 1st Court, 24-Parganas.

BAMA PADA CHAUDHURI, Pleader, for decree holder.

24th June 1902.

(321—1—891

Pure Sulphate of Quinine.

MANUFACTURED AT THE BENGAL GOVERNMENT CINCHONA PLANTATION

FROM 1st April 1902 the price of this quinine will be as follows:—

1	Pound tin	Rs.	17,	or, post free,	Rs.	17-8
½	"	"	"	8-8	"	"	"	"	8-14.
¼	"	"	"	4-4	"	"	"	"	4-10

Analysis shows this quinine to be of the purest manufacture; and it is guaranteed to be free from wilful mixture with the inferior alkaloids, cinchonine and cinchonidine. It is for sale only to Government officers, and only for cash, and may be had from the Superintendent, Botanic Garden, Sibpur, near Calcutta.

Cinchona Febrifuge

Cinchona Febrifuge can be purchased by all Government officers and by any one taking *six pounds* and upwards at a time from the Superintendent, Botanic Garden, Calcutta, for cash only at the following rates—

	Government officers.	General public.	Postage extra.
	Rs. A.	Rs.	As.
1 Pound tin ...	10 0	12	8
½ " " ...	5 0	6	6
¼ " " ...	2 8	3	4

BASANT KUMAR BANERJEA, B.L., intends to be enrolled as Vakil, High Court.

(292—4—832)

BABU NIKHIL NATH ROY, B.L., Pleader, District Judge's Court, Murshidabad, intends to be enrolled as Vakil, Calcutta High Court. (322—4—393)

Wanted

A QUALIFIED Hindi-knowing Overseer for the Daltonganj Municipality. Salary according to qualifications up to Rs. 35 a month. The selected candidate will have also to collect taxes and give security in Rs. 250. Candidates must state age, residence, etc., and apply on or before the 15th July.

SARAT CH. SEN GUPTA,
for Chairman, Daltonganj Municipality.

Daltonganj, the 11th June 1902 (267—3)

Wanted

For the District Board of Backergunge—

(*a*) An Overseer on Rs. 80 a month with prospect of speedy increment on satisfactory service,

(*b*) An Overseer on Rs. 70 a month,

with fixed monthly travelling allowance of Rs. 30 in each case.

CANDIDATES must be qualified under Bengal Government Notification No. 3334L.S.-G., dated 20th December 1901. Applications will be received by the undersigned up to the 8th proximo. For the former appointment preference will be given to those who have experience in building construction.

JOGENDRONATH GHOSE, A.M.I.C.E.,
District Engineer, Backergunge.

Barisal, the 18th June 1902.

(300—2)

Wanted

AN Accountant and Head Clerk for the District Board's Office, Bogra, for one year, on Rs 40 a month, to act in place of the permanent incumbent going on leave. He must be qualified under the rules. Applications will be received by the undersigned up to 15th July 1902.

N. N. BANERJI, *for* Chairman.

Bogra, the 27th June 1902. (331—1)

WANTED temporarily a second Clerk on Rs. 20 per mensem for the District Board's Office, Palamau. None need apply who has not passed the Entrance Examination. Preference will be given to one who writes a quick and neat hand and possesses a fair knowledge of office works

Applications will be received by the undersigned up to 15th July 1902.

SARAT CHANDRA SEN GUPTA,
Vice-Chairman, District Board, Palamau, *for* Chairman.

Daltonganj, the 24th June 1902. (325—1)

WANTED an Estimator for the office of the District Engineer, Hooghly, on a monthly salary of Rs. 50. None need apply who has no experience in estimating. Preference will be given to those who have completed the course of studies prescribed for the L E or B. E examination of the Sibpur Engineering College. The selected candidate will have to join at once. The appointment is temporary with prospects of being made permanent if the candidate gives satisfaction. Applications will be received up to 15th July 1902.

P. MUKERJEA, Hd. Clerk and Acctt.,
for Dist. Engineer, Hooghly, on tour.

Chinsura, the 23rd June 1902. (320—2)

NOTIFICATION.

WHEREAS the Chakmanjo Estate in Hazaribagh the property of Tikait Tulsi Narayan Singh, the management of which was first vested in the Manager, Babu Adhur Kali Mukherjee, under the provisions of the Chota Nagpur Encumbered Estates Act, VI of 1876, in accordance with the notification published in the *Calcutta Gazette* dated 27th June 1881, has been released from the said management and restored to the possession of the said Tikait Tulsi Narayan Singh from the 15th May 1902, it is hereby notified for information to whomsoever it may concern that the provisions of Act have ceased to apply from that date to the said property.

F. A. SLACKE, Offg. Commissioner.

Commr.'s Office, Ranchi, the 18th June 1902.

Treasure Trove Notice.

IT is hereby notified, under section 5 of the Indian Treasure Trove Act, VI of 1878, that on Saturday, the 22nd March 1902, 16 silver coins, weighing in all 37½ tolas and valued at Rs 21 1-6, and a copper bar valued at annas 8, were found by (1) Konda Addonna, (2) Kona Krishnamma, (3) Konda Ramanna, of Jalmoor, Checacole taluq, Ganjam district, while digging in the ground formerly occupied by the old fort at Jalmoor.

2. All persons claiming the said treasure or any part thereof are hereby required to appear either personally or by agent before the Collector of Ganjam at his office at Chatrapur at 11 A.M. on 25th October 1902 in order that the matter may be enquired into and determined in accordance with the provisions of the Act.

(ILLEGIBLE,)
for Acting Collector of Ganjam.

Camp Berhampore, the 20th June 1902.

The Commissioners for the Port of Calcutta.

NOTIFICATION.

A CHARGE of twelve annas per ton for shipping myrabollams at the Docks or Jetties having been sanctioned by the Commissioners for the Port of Calcutta under section 105, Act III (B.C.) of 1890, and approved of by the Local Government in letter No. 81T.—Marine, dated 12th June 1902, it is hereby notified for general information under the provisions of section 107, Act III (B.C.) of 1890.

By order of the Commissioners,
R. A. DONNITHORNE, Secretary.

Port Commrs.' Office, Calcutta, the 25th June 1902.

(332—1)

The Dessai and Parbuttia Tea Co., Ld.

NOTICE is hereby given that an Extraordinary General Meeting of the abovenamed Company will be held at No. 100 Clive Street, Calcutta, the Registered Office of the Company, on Tuesday, the 15th day of July 1902, at 4 o'clock in the afternoon, when the subjoined Resolutions which were duly passed at an Extraordinary General Meeting of the Company, held on the 17th day of June 1902, will be submitted for confirmation as special Resolutions :—

(1) That it is desirable to reconstruct the Company, and accordingly that the Company be wound up voluntarily, and that Mr. H. I. Peter, of 100 Clive Street, be and he is hereby appointed Liquidator for the purposes of such winding up.

(2) That the said Liquidator be and he is hereby authorised to consent to the registration of a new Company, to be named THE DESSAI AND PARBUTTIA TEA COMPANY, LIMITED, with a Memorandum and Articles of Association which have already been prepared with the privity and approval of the Directors of this Company.

(3) That the draft Agreement submitted to this Meeting and expressed to be made between this Company and its Liquidator of the one part and the said new Company of the other part be and the same is hereby approved, and that the said Liquidator be and he is hereby authorised, pursuant to section 201 of the Indan Companies Act, 1882, to enter into an Agreement with such new Company (when incorporated) in the terms of the said draft and to carry the same into effect with such, if any, modifications as he may think expedient.

By order,

GEO. HENDERSON & Co., Secretaries.

100 Clive Street, Calcutta, dated 17th June 1902.

(317—3—872)

Estate James Moran, deceased.

NOTICE is hereby given that all creditors and other persons having any claims against the estate of James Moran, late of 15 Bulstrode Street, Marylebone, in the County of London, a Lieutenant-Colonel in the Indian Medical Service, who died at 15 Bulstrode Street, aforesaid, on the 20th day of September 1901, are hereby required to send in writing the particulars thereof to the undersigned as Solicitors for Oliver Horace Dickinson, of 30-2 Dalhousie Square, Calcutta, to whom Letters of Administration of the property and credits of the said deceased with copy Will annexed have been granted by the High Court of Judicature at Fort William in Bengal, on or before the 14th day of August 1902, after which date no claims will be admitted and the assets of the estate of the said deceased will be distributed. Dated this 27th day of June 1902.

SANDERSON & Co.

30-2 Dalhousie Square, Calcutta. (327—1—894)

Notification.

TO be peremptorily sold, pursuant to a decree of the Calcutta High Court, Ordinary Original Civil Jurisdiction, in Suit No. 576 of 1901, and dated the 27th day of January 1902, by the undersigned in the Registrar's room in the said Court on Saturday, the 9th day of August 1902, at 12 o'clock noon, the following property :—

All that upper-roomed dwelling house with land thereunto belonging, No. 29 Mirzapur Lane, in the Town of Calcutta, South Division, Holding No. 195, Block No. 1, containing by Collectorate measurement 6 cottahs and 5 chittaks and 19 square feet, more or less, bounded on the north by the debutter tenanted land of the late Bhoobun Mohun Pal, on the south by Mirzapur Lane, on the east by the dwelling-house of the late Debendro Nath Chatterjee, and on the west by the dwelling-house of the late Tincouri Roy.

The abstract of title and conditions of sale may be seen at the office of the undersigned and at No. 1 Hare Street, in the office of Messrs. Rutter & Co., Attorneys for the plaintiff, on any day before the sale and will be produced at the sale.

W. R. FINK, Registrar.

Rutter & Co., Plaintiff's Attorneys.

Calcutta High Court, Original Jurisdiction, the 24th June 1902. (334—1—896)

NOTIFICATION.

TO be peremptorily sold, pursuant to a decree and order of the High Court, Original Jurisdiction, in suit No. 606 of 1900 (Sreemutty Bhabinymonee Dassee *versus* Hafez Abdur Rohoman and others), dated respectively the 4th day of March 1901 and the 24th day of February 1902, at 12 o'clock noon, on Saturday, the 19th day of July 1902, by the Registrar of the High Court, the following property :

No 31, Emambary Lane (formerly Nos. 31 and 32), holding No. 107, block No. XVI, in the south division of the town of Calcutta, a partly lower-roomed and partly upper-roomed brick-built, tiled dwelling-house and land thereunto belonging, and on part whereof the same is erected and built, containing by estimation 17 cottahs 7 chittaks and 2 square feet, more or less, and bounded in manner following :—

On the north by Emambary Lane aforesaid, on the south by municipal filled-up drain, on the east by the tenanted house belonging to the estate of the late Sagore Dutt, and on the west by the tenanted house and tenanted land of Golam Mullah, and paying an annual revenue of Rs. 3 anna 1 and pies 9 to the Collectorate of Calcutta, together with all easements and appurtenances thereto belonging.

The abstract of title and conditions of sale may be seen at the office of the Registrar or at the office of Messrs. Banerjee and Halder, Attorneys for the plaintiff, on any day before the sale and will be produced at the sale.

W. R. FINK, Registrar.

Banerjee and Halder, Attorneys for the plaintiff.

High Court, Original Side, the 8th May 1902.

(301—1—892)

Notification.

TO be peremptorily sold by the Registrar, High Court of Judicature at Fort William in Bengal, in its Ordinary Original Civil Jurisdiction, in his sale-room in the Court-house on Saturday, the 26th day of July 1902, at the hour of 12 o'clock noon, pursuant to a decree and order of the said Court made in suit No. 111 of 1901 (wherein Nocoor Chunder Nandy is the plaintiff and Biraj Chunder Marick and Bepin Behary Marick are defendants), dated, respectively, the 11th day of April 1901 and the 25th day of March 1902, the undermentioned property :—

1. No. 10 Goalapara Lane (formerly known as No. 10 Hogulkuria 2nd Lane), being a one-storied dwelling-house and a tiled hut with cowshed and a pucca privy with the land appertaining thereto, containing by estimation 6 cottahs and 8 square feet, more or less, in Holding No 29, Block No. 23 in the North Division of the town of Calcutta, the annual revenue payable to the Collectorate in respect thereof being Re. 1-4-5, and bounded as follows :—On the north by Goalapara Lane, on the south by Goalapara Lane, on the east by a pucca building and open land of premises No. 11, and on the west by the open land of premises No. 9.

The abstract of title and conditions of sale may be seen at the Registrar's office in the High Court and also at the office of Messrs. Satyadhan Bonnerjee and De at No. 9 Old Post Office Street on any day before the sale and will be produced at the sale.

W. R. FINK, Registrar.

Satyadhan Bonnerjee and De, Plaintiff's Attorneys.

The 10th June 1902. (333—1—895)

Notification.

THE following revised scale of charges for wharfage on kerosine oil landed at Budge-Budge Petroleum Wharf having been approved by His Honour the Lieutenant-Governor of Bengal is now published for general information, in accordance with the provisions of section 107, Act III (B.C.) of 1890, and will come into force from the date hereof :—

Wharfage on kerosine oil in cases, including storage for seven weeks from the date of the vessel coming alongside a landing-stage	...	4½ pies per case.
Wharfage on bulk oil	...	12 annas per ton of 280 gallons.

By order of the Port Commissioners,

R. A. DONNITHORNE,

Calcutta, the 1st July 1902. Secretary.

(338—1)

Notification.

TO be peremptorily sold pursuant to a decree and an order made by the Calcutta High Court in suit No. 209 of 1899 (Charoo Chunder Dutt and another *versus* Kally Churn Sreemany and others, and dated, respectively, 29th January 1900 and 24th July 1901, by the Registrar of the said Court, Original Side, in his sale-room on Saturday, the 2nd day of August 1902, at the hour of 12 o'clock, noon, the undermentioned property in Calcutta:—

Premises Nos. 33 and 34 (formerly Nos. 29/2 and 29/3), Chandney Chowk Street, a piece of land containing by measurement 12 cottahs 7 chittaks and 13 feet (excluding the piece of land on the south set apart by the decree in suit No. 780 of 1891 of the said High Court for the mosque and the passage thereto referred to therein), being holdings Nos. 359 and 360, respectively, and Block No. XVI, the annual Government revenue payable in respect whereof is Re. 1-1-5 only for each of the said premises, and which two premises are at present bounded on the north partly by premises No. 6, Chandney Chowk 2nd Lane, and partly by a filled-up sewer ditch; on the east partly by premises No. 32, Chandney Chowk Street, and partly by the land set apart for the mosque; on the south partly by the land set apart for the mosque and the passage thereto, and partly by premises No. 6, Chandney Chowk 1st Lane; and on the west partly by the land set apart for the mosque, and partly by a filled-up sewer ditch.

The area and boundaries of the said two premises are given separately as follows in the mortgage executed in favour of the plaintiffs:—

Premises No. 33 (formerly No. 29/2), Chandney Chowk Street, containing by estimation 2 cottahs 8 chittacks (being a clerical error for 5 cottahs 8 chittacks), more or less, and bounded on the west partly by the tenanted house of Babu Doyal Chand, and partly by the land and premises No. 34, Chandney Chowk Street described below; on the north by the tenanted house of Bibi Amon; on the east by the tenanted land of Jetoo Singh; and on the south partly by the house of Mr. Brett, and partly by a musjid referred to below.

Premises No. 34 (formerly No. 29/3), Chandney Chowk Street, containing by estimation 5 cottahs 8 chittacks, more or less, and bounded on the west by the tenanted land of Doyal Chand Babu; on the south partly by the house of Mr. Brett, and partly by a musjid; on the north by the tenanted house of Bibi Amon; and on the east by the premises No 33, Chandney Chowk Street above described, save and except the portions set apart for the said musjid and for a passage.

The abstract of title and conditions of sale may be seen at the office of the said Registrar, Original Side, or at the office of the plaintiffs' Attorney, Mr. Jogen C. Dutt, at No. 8, Old Post Office Street, Calcutta, on any day before the sale and will be produced at the sale.

W. R. FINK, Registrar.

J. C. Dutt, plaintiffs' Attorney.

Calcutta High Court, Original Side, dated 26th June 1902. (337—1—898)

Lost

A RECEIPT numbered 6694, dated 28th April 1902, and granted by the Public Debt Office, Bank of Bengal, on submission of the undermentioned Government Promissory Notes. Notice of loss has been given to the Public Debt Office, Bank of Bengal, and the undersigned is about to apply for surrender of the securities:—

G. P. Note No.	Loan.	Amount.	Holder's name.
		Rs.	
035859	1896-97	100	Amrita Lall Roy Choudhry.
035860		100	
025861		100	
Total ...		300	

Name of Proprietor—Amrita Lall Roy Choudhry.

Residence—Barisha.

(339—1—897)

Lost

THE Government Promissory Note No. 055821, 3½ per cent. loan of 1865, for Rs. 500, originally standing in the names of Annapurna Dasi and Gosto Lal Sen, the proprietors, by whom it was never endorsed to any other person. Payment of the above note and the interest thereupon have been stopped at the Public Debt Office, Bank of Bengal, and application is to be made for accrued interest and for the issue of duplicate in favour of the surviving proprietor after two years from the date of last advertisement.

Name of the surviving proprietor—GOSTO LAL SEN.

Residence—22, Sree Nath Roy's Lane, Chorebagan, Calcutta. (290—3—834)

In the Second Court of the Subordinate Judge of Hooghly.

RENT EXECUTION CASE No. 19 OF 1902.

Badan Chandra Chowdhury, of Hooghly Imambarah, decree-holder, *versus* Rajendra Narayan Nundy and others, of Hooghly Sahagunga, judgment-debtors.

TO be sold by the Nazir of the Hooghly district in his sale-room on the forenoon of 14th July 1902 for realization of a debt of Rs. 4,153-6-3—

Lot No. 1.—One anna 6 gandas 2 karas 2 krantis share belonging to the judgment-debtor No. 1 in lot Mukundapur within the district of Hooghly and sub-registry of Dhaniakhally, bearing tauzi No. 2 of Hooghly Collectorate. The annual revenue payable in the Hooghly Collectorate for above share of the judgment-debtor is Rs. 1,212-8 4 gandas.

A. K. BOSE, Subordinate Judge.

Chinsura, the 26th June 1902. (329—1)

INSOLVENT NOTICES.

In the Court for the Relief of Insolvent Debtors at Calcutta.

In the matter of KANAHYA LALL DAGA, an insolvent.

On Monday, the 14th day of April last, it was ordered that the matters of the petition of the said insolvent be heard on Tuesday, the 5th day of August next, and that the said insolvent do then attend to be examined before the said Court.

A. K. Thakur, Attorney. (307—2)

In the matter of JOHN NICHOLAS, an insolvent.

On Monday, the 26th day of May last, it was ordered that the matters of the petition of the said insolvent be heard on Tuesday, the 5th day of August next, and that the said insolvent do then attend to be examined before the said Court.

Gregory and Jones, Attorneys. (308—2)

Chief Clerk's Office, the 23rd day of June 1902.

In the matter of AJUDHYANATH MUKERJEE, an insolvent.

Notice that an application for an *ad-interim* protection order has been this day made by the said insolvent, and that such application will be heard and disposed of by the Acting Commissioner of the Insolvent Court on Monday, the 7th day of July instant, at the hour of half-past ten o'clock in the forenoon.

☞ "Any creditor of the said insolvent desirous of opposing such application must appear before the said Court at the time and place aforesaid."

Radhicanath Gangooly, Attorney. (340—1)

In the matter of SONTOSH LALL DUTT, an insolvent.

On Monday, the 30th day of June last, the application for *ad-interim* protection in this matter came on for hearing, and the said application was adjourned to Monday, the 7th day of July instant, at the hour of half-past ten o'clock in the forenoon.

☞ "Any creditor of the said insolvent desirous of opposing such application must appear before the said Court at the time and place aforesaid."

Manick Lall Seal, Attorney.

Chief Clerk's Office, the 1st day of July 1902. (341—1)

CALCUTTA POST OFFICE NOTICE.

Mails for—	Date and hour of closing at the General Post Office, Calcutta.		Route by which despatched.
	1902.	P.M.	
United Kingdom, Aden, Egypt, Europe, America, West Africa *vid* United Kingdom and East Africa *vid* Aden (and also South Africa, if superscribed on the cover *vid* United Kingdom or Aden).	3rd July	At 6-30	Per P. & O. steamer from Bombay.
		Parcels P.M.	
Parcels and money-orders for the United Kingdom and other Foreign places.	2nd ,,	At 5 M-O. P.M. At 4	Ditto ditto
*Australasian Colonies ...	8th ,,	,, 7-30	Vid Tuticorin and Colombo.*
†Straits Settlements (also China and Japan, if the steamer's name is superscribed on the cover).	8th ,,	,, 8-30	Per steamer *C. Apear.*
Burma	3rd ,,	,, 7-30	Per B. I. S. N. Co.'s steamer.
Burma, Penang and Singapore.	5th ,,	,, 7-30	Ditto ditto.
Akyab, Kyaukpyu and Sandoway.	5th ,,	,, 7-30	Ditto ditto.
Burma, Tavoy and Mergui ...	7th ,,	,, 7-30	Ditto ditto.
Port Blair	5th ,,	,, 7-30	*Vid* Madras.
China and Japan ...	2nd ,,	,, 7-30	R. I. M. S. *Clive.*

* Although the date entered in column 2 is, as far as can be calculated, the latest safe date of posting for the next Mail steamer, full allowance being made for the steamer being in advance of her published timing, Mails for the places mentioned in column 1 are despatched daily to Colombo, so that they may proceed by any steamer that has been unusually accelerated or retarded, or by any special opportunity that may be afforded by a steamer not belonging to one of the regular lines.

† Correspondence for China and Japan is despatched daily to Colombo, so that they may proceed by the first steamer available.

1. The letter-box for Inland articles will be cleared for the forenoon Mails at the following hours:—
   For Goalundo, Arakan and Chittagong, at 5-30 A.M.
   For Midnapore and Orissa districts, at 8-30 A.M.
   For the Eastern districts, as far as Dacca and Mymensingh, at 6-30 A.M.
   For Khulna and Jessore districts, at 7-30 A.M.
   For Bombay, Central Provinces and Midnapore, *vid* Bengal-Nagpur Railway, at 10-45 A.M., and with a late fee of ½ anna up to 11-35 A.M.

2. The letter-box will be cleared for the evening Mails at the following hours, viz:—
   For the East Indian Railway Loop Mail, at 2-30 P.M., and with a late fee of ½ anna up to 2-55 P.M.
   For the Northern Bengal, Darjeeling and Assam Mails, at 3-25 P.M., and with a late fee of ½ anna up to 3-50 P.M.
   For the Bombay Mail, *vid* Jubbulpore, at 6 P.M., and with a late fee of ½ anna up to 6-30 P.M.
   For the Punjab Mail, at 7-30 P.M.
   For Midnapore, Orissa and Madras Presidency, at 7-30 P.M. } and with a late fee of ½ anna up to 8 P.M. and
   For the Khulna Mail at 7-30 P.M. } with a late fee of 1
   For the Eastern Bengal Mail, at 7-30 P.M. } anna up to 8-45 P.M.

3. Late registered letters will be received between the following hours:—
   For the Bombay Mail, *vid* Jubbulpore, from 5 P.M. to 6-15 P.M.
   For the Punjab Mail, from 6 P.M. to 7 P.M.
   For the Eastern Bengal Mail, from 6 P.M. to 7 P.M.
   For the Khulna Mail, from 6 P.M. to 7 P.M.
   For Midnapore, Orissa and the Madras Presidency, from 6 P.M. to 7 P.M.

NOTE.—The late fee on each registered letter will be 2 annas which must be prepaid in stamps on the letter.

4. Articles for Burma and for Port Blair by sea are received without late fee up to 7-30 P.M., and with a late fee of ½ anna up to 8 P.M.

5. On the latest safe day of despatch of Mails for the Australasian Colonies, or any other Foreign Countries, *vid* Madras or Tuticorin, the letter-box for Foreign articles will be cleared for the last time at 7-30 P.M. and late letters and papers fully prepaid will be received up to 8-45 P.M.

6. On the day of despatch of the Mail for Europe (Thursday), the letter-box for Foreign articles will be cleared for the last time, for articles, without the late fee, at 6-30 P.M., and late letters and papers fully prepaid will be received up to 6-45 P.M. Late registered articles will be received from 5 to 6 P.M. On other days the letter-box for Foreign articles will be cleared for the last time, without the late fee, at 6 P.M., and late letters and papers will be received up to 6-30 P.M. for despatch by any Foreign Mails, *vid* Bombay, the same night and up to 8-30 P.M., late letters and papers up to 9 P.M., for any Foreign Mails despatched by sea. Foreign Mails for despatch *vid* Madras or Tuticorin are received up to 7-30 P.M., and with a late fee up to 8-45 P.M. The late fee for Foreign articles is 4 annas, which must be prepaid in stamps affixed to the articles.

JOHN OWENS,
Presidency Postmaster.

CALCUTTA G. P. O.,
The 1st July 1902.

NADIA RIVERS.

Report showing the least depths of water for the week ending Friday, the 27th June 1902.

Name of river.	Reach of river.	Least depth of water sounding.	Remarks.
		Ft. in.	
Bhagirathi.	Entrance from Ganges	6 0	
	Thence to Geria ...	3 3	Geriah.
	From Geria to Jangipur ...	3 3	Nobokantopur.
	,, Jangipur to Berhampore	3 0	Lalbag.
	,, Berhampore to Katwa	3 0	Nagore.
	,, Katwa to Nadia ...	...	
Bhyrab-Jalangi.	Entrance from Ganges ...	10 0	
	Thence to Akriganj	10 0	Chakharpara.
	Akriganj to junction of the Bhyrub and Jalangi	6 6	Harharia.
	Thence to Patkabari	9 0	Lalnagar.
	Patkabari to Nadia	...	
Mathabhanga.	Entrance from Ganges ...	5 0	
	Thence to Dewanganj ...	5 6	Jamalpur.
	From Dewanganj to Shikarpur	5 3	Kurmipara.
	,, Shikarpur to Boalia ...	4 9	Shyamnagar.
	,, Boalia to Chuadanga ...	5 0	Sealmari.
	,, Chuadanga to Kissengunj and Hanskhali..	4 0	Raipur.

Gauge Readings.

	Locality.	Date.	Hour.	Height above zero.	Height above mean sea level.	Remarks.
			A.M.	Ft.	Ft.	
Ganges ...	Sahebganj	28-6-1902	6	5·8	75·8	
	Rampur Boalia...	27-6-1902	Noon	7·06	49·06	
	Entrance of Bhagirathi Geria ...	27-6-1902	A.M. 7	...	56·90	
	Entrance of Bhyrub Jalangi					
	Akhriganj ...	29-6-1902	A.M. 7	...	45·15	
Bhagirathi.	Entrance of Mathabhanga ...	26-6-1902	...	7·75	...	
	Jangipur ...	28-6-1902	...	...	51·80	
	Berhampore ...	30-6-1902	A.M. 10	5·90	39·25	
	Katwa .	26-6-1902	...	5·80	20·66	
Jalangi	Krishnagar ...	...	...	...	...	
	Sarupganj ...	27-6-1902	Noon	...	5·50	
Mathabhanga.	Hanskhali ...	28-6-1902	P.M. 4	4·60	...	

A. K. BANERJEE, *Accts.*,
For *Exe. Engr., Nadia Rivers Division.*

Berhampore, the 30th June 1902.

Parts I, II and III of a Descriptive Catalogue of the Sanskrit Manuscripts in the Library of the Calcutta Sanskrit College, prepared by Pandit Hrishikesa Sastri and Babu Siva Chandra Gui, M.A., B.L., of that College are offered to the public for sale. The Catalogue is to be completed in 23 parts, the price of each part being 12 annas a copy, exclusive of postage. Copies can be obtained, from the Principal of the Sanskrit College, Calcutta.

GOVERNMENT PUBLICATIONS FOR SALE

At the Bengal Secretariat Book Depot, Writers' Buildings, Calcutta, and by the following Agents :—

AGENTS IN INDIA.

Messrs Thacker, Spink & Co., Calcutta and Simla.
Messrs. Newman & Co., Calcutta.
Messrs. Higginbotham & Co., Madras.
Messrs. Thacker & Co., Ld., Bombay.
Messrs. A. J. Combridge & Co, Bombay.
Mr. E. Seymour Hale, 53 Esplanade Road, Fort, Bombay, and Calcutta.
The Superintendent, American Baptist Mission Press, Rangoon.
Rai Sahib M. Gulab Singh & Sons, Proprietors of the Mufid-i-am Press, Lahore, Punjab.

AGENTS IN ENGLAND.

Mr. E. A. Arnold, 37 Bedford Street, Strand, London.
Messrs. Constable & Co., 2 Whitehall Gardens, London.
Messrs. Sampson Low, Marston & Co., St. Dunstan's House, Fetter Lane, London.
Messrs. Luzac & Co., 46 Great Russell Street, London.
Messrs. Kegan Paul, Trench, Trubner & Co., Charing Cross Road, London.
Mr. B. Alfred Quaritch, 15 Piccadilly, London.
Messrs. P. S. King & Son, 2 & 4 Great Smith Street, Westminister, London.
Messrs. H. S King & Co., 65 Cornhill, London.
Messrs. Williams and Norgate, Oxford.
Messrs. Deighton Bell & Co., Cambridge.
Messrs. S. K. Lahiri & Co., Printers and Booksellers, College Street, Calcutta.
Messrs. V. Kalyanarama Iyer & Co., Booksellers, &c. Madras.

AGENTS ON THE CONTINENT.

Messrs. R. Friedlander & Sohn, Berlin, N. W. Carlstrasse, 11.
Mr. Otto Harrassowitz, Leipzig.
Mr. Karl Hiersemann, Leipzig.
Mr. Ernest Leroux, 28 Rue Bonaparte, Paris.
Mr. Martinus Nijhoff, The Hague.

NOTICE.—Books required for private use can be purchased. Applications should be accompanied by a remittance, unless it is wished that the books should be sent by value-payable post, in which case, besides the ordinary postage, an additional charge will be made for registration and commission.

Books required for the Public Service should be obtained through the Heads of Departments.

☞ *The amounts within parentheses are for packing and postage.*

NEW PUBLICATIONS ISSUED DURING THE CURRENT QUARTER.

LEGISLATIVE DEPARTMENT.

The Bengal Vaccination Act, 1880 (Bengal Act V of 1880), as modified up to 1st June 1902. Royal 8vo. Paper cover. Price 4*a*. (1*a*.)

PUBLICATIONS ISSUED BETWEEN THE 1ST APRIL AND THE 30TH JUNE, 1902.

APPOINTMENT DEPARTMENT.

Quarterly Civil List of Bengal corrected up to 1st April 1902. Super-royal 8vo. Paper cover. Price Rs. 3. (4*a*.)

FINANCIAL DEPARTMENT.

The Stamp Manual, 1902. A Manual for the guidance of officers in the administration of the Stamp Department, Royal 8vo. Board, Paper cover. Price Re. 1-8 (6*a*.)

Annual Report on the consumption of Stationery in Bengal during 1900-1901. F'cap. Paper cover. *Rs.* 3. (2*a*.)

GENERAL DEPARTMENT.

List of Officers in the Subordinate Educational Service, Bengal, corrected up to 1st April 1902. F'cap. Paper cover. 8*a*. (1*a*.)

JUDICIAL DEPARTMENT.

Question Papers set at the Pleadership and Muktearship Examinations for the year 1902. Royal 8vo. Paper cover. Price 2*a*. (1*a*.)

Question Papers set at the Examination of candidates for appointment as Sub-Inspectors of Police July and November 1901. Royal 8vo. Paper cover. Price 5*a*. (1*a*.)

Question Papers set at the Examination of candidates for recruiting the staff of Superior Police Officers in Bengal and Assam, held in November 1901. Royal 8vo. Paper cover. Price 8*a*. (1*a*.)

LEGISLATIVE DEPARTMENT.

The Court of Wards' Act, 1879 (Bengal Act IX of 1879), in Hindi, as modified up to the 1st July 1901. Royal 8vo. Paper cover. Price 6*a* (1*a*.)

The Calcutta Port Act, 1890 (Bengal Act III of 1890), as modified up to 1st April 1902. Royal 8vo. Paper cover. Price 10*a*. (1*a*.)

MUNICIPAL DEPARTMENT.

Annual Returns of the Lunatic Asylums in Bengal with brief notes for the year 1901. Compiled by the Inspector-General of Civil Hospitals. F'cap. Paper cover. Price Re. 1. (2*a*.)

Account Rules under the Local Self-Government Act, Part VIII. F'cap. Paper cover. Price 8*a*. (.)

Annual Report of the Chemical Examiner's Department, Bengal, 1901. F'cap. Paper cover. Price 8*a*. (2*a*.)

PUBLIC WORKS DEPARTMENT.

Distribution Return of Officers and Subordinates employed on Local Works in Bengal, corrected up to 31st December 1901. Super-royal 8vo. Paper cover. Price 2*a*. (1*a*.)

Embankment and Drainage Report of the Government of Bengal, Irrigation Department, for the year 1900-1901. F'cap. Boards Paper cover. Price Re. 2. (3*a*.)

Classified List and Distribution Return of Establishment corrected up to 31st March 1902. Super-royal 8vo. Paper cover. Price 4*a*. (1*a*.)

Dacca Electric Lighting License, 1902. F'cap. Paper cover. Price 14*a*. (1*a*.)

Notes on the construction of Railways in India (for students) with 5 charts. F'cap. Paper cover. Price Re. 1. (1*a*.)

REVENUE DEPARTMENT.

Annual Report of the Burdwan Experimental Farm for the year 1900-1901. F'cap. Paper cover. Price 3*a*. (1*a*.)

Annual Report on the Survey Operations in Bengal during the year 1900-1901 (from 1st October 1900 to 30th September 1901). F'cap. Paper cover. Price Re. 1-8. (2*a*.)

Annual Report of the Director of the Department of Land Records, Bengal, on Settlements, for the year ending 30th September 1901. F'cap. Paper cover. Price 8*a*. (1*a*.)

The Practice and Procedure Manual, published under the authority of the Board of Revenue. Royal 8vo. Board. Paper cover. Price 12*a*. (3*a*).

OLDER PUBLICATIONS.

A General Catalogue of all Government Publications (corrected up to 31st December, 1901) may be obtained *gratis* on application to the Officer in charge, Bengal Secretariat Book Depôt.

Publications for sale at the office of the Chief Inspector of Explosives with the Government of India.

Rules for the manufacture, possession and sale of explosives issued by each of the Local Governments and Administrations. Price 12*a*.

Rules for the transport and importation of explosives issued by the Government of India. Price 12*a*.

Rules for the transport and importation of explosives at the Port of Calcutta. Price 4*a*.

GOVERNMENT PUBLICATIONS FOR SALE

BY THE SUPERINTENDENT OF GOVERNMENT PRINTING, INDIA, 8 HASTINGS STREET, CALCUTTA.

[A General Catalogue of all Government Publications may be obtained gratis from the Government Central Press, Calcutta.]

All books published by the Superintendent of Government Printing, India, can be purchased, either directly or through the following or any other booksellers:—

AGENTS IN INDIA.

Messrs. Thacker, Spink & Co., Calcutta and Simla.
Messrs. Newman & Co., Calcutta.
Messrs. Higginbotham & Co., Madras.
Messrs. Thacker & Co., Ld., Bombay.
Messrs. A. J. Combridge & Co., Bombay.
Superintendent, American Baptist Mission Press, Rangoon.
Manager, Educational Book Depôts, Nagpur and Jubbulpore.*
Rai Sahib M. Gulab Singh and Sons, Mufid-I-Am Press, Lahore.

AGENTS IN EUROPE.

Mr. E. A. Arnold, 37 Bedford Street, Strand, London.
Messrs. Constable & Co., 2 Whitehall Gardens, London.
Messrs. Sampson Low, Marston & Co., St. Dunstan's House, Fetter Lane, London.
Messrs. Luzac & Co., 46 Great Russel Street, London.
Messrs. Kegan Paul, Trench, Trübner & Co., Charing Cross Road, London.
Mr. B Alfred Quaritch, 15 Piccadilly, London.
Messrs. P. S. King and Son, 2 & 4 Great Smith Street, Westminster.
Messrs. H. S. King & Co., 65 Cornhill, London are also Agents for the sale of the Indian Army List.
Mr. Otto Harrassowitz, Mr. Karl Hiersemann } Leipzig.
Messrs. R. Friedlander & Sohn, Berlin, N. W. Carlstrasse, 11.
Mr. Ernest Leroux, 28 Rue Bonaparte, Paris.
Mr. Martinus Nijhoff, the Hague, Holland.
Messrs. Williams and Norgate, Oxford.
Messrs. Deighton Bell & Co., Cambridge.

* Agent for sale of the Legislative Department publications.

NOTICE.—Books and Acts required for private use only can be purchased. Applications should be accompanied by a remittance, unless it is wished that the books should be sent by value-payable post, in which case, besides the ordinary postage, an additional charge is made for registration and commission.

Books and Acts required for the public service should be obtained through Local Governments to whom the applicant is subordinate.

Applications for Government publications which are no longer in print should be made to the Agents of the particular Government under whose orders they were originally issued.

The amounts within parentheses are for packing and postage.

List of New Books published during the Current Quarter.

HOME DEPARTMENT.

Report of Proceedings of the Central Indigenous Drugs Committee of India, Volume I. Royal 8vo. Board. Rs. 3-8 or 5*s.* 3*d.* (7*a*)

List of Europeans and others in the English Factories in Bengal at the time of the Siege of Calcutta in the year 1756 with an Appendix containing lists of European Sufferers. By S. Charles Hill, Esq., B.A., B.Sc., Super-Royal 4to. Paper cover. Rs. 2 or 3*s.* (3*a.*)

Judicial and Administrative Statistics for British India, 6th issue, 1900-1901, and preceding years F'cap Boards. *Rs.* 2 or 3*s.* (10*a.*)

The Countess of Dufferin's Fund Seventeenth Annual Report of the National Association for Supplying Female Medical Aid to the Women of India for the year 1901. Super-Royal 8vo. Re. 1 or 1*s.* 4*d.* (3*a.*)

STATISTICAL DEPARTMENT.

Trade and Navigation Accounts of British India for February, 1902. Royal 8vo. Stitched. 8*a.* or 9*d.* (2*a.*)

External Land Trade of British India—Accounts for December, 1901. Royal 8vo. Stitched. 8*a.* or 9*d.* (2*a.*)

Accounts of the Trade of the French Possessions in India in the year ending 31st March, 1901, and the four preceding years F'cap. Paper cover. 2*a.* or 3*d.* (1*a.*)

Accounts relating to the Trade carried by Rail and River in India in the quarter and in the nine months ending December 1901. Compared with the corresponding periods of the years 1899 and 1900. No. 3 of 1901-1902. F'cap. Paper cover. 8*a.* or 9*d.* (2*a.*)

Statistics of Cotton Spinning and Weaving in the Indian Mills in January, 1902, and in the ten months, April, 1901, to January, 1902. Compared with the corresponding period of 1899-1900 and 1900-1901. Royal 8vo. Stitched. 2*a.* or 2*d.* (1*a.*)

Accounts of the Trade of Aden in the year ending 31st March 1901, and the four preceding years. F'cap. Paper cover. 10*a.* or 1*s* (2*a.*)

Accounts of the Trade of the Portuguese Possessions in India in the year 1899-1900, and the four preceding years. F'cap. Paper cover. 2*a.* or 3*d.* (1*a.*)

Prices and wages in India. Nineteenth issue, 1902. Super-Royal 4to. Boards. Re. 1-8. or 2*s.* (9*a.*)

FINANCE AND COMMERCE DEPARTMENT.

List of Officers in the Finance and Commerce Department. Corrected to February, 1902. Royal 8vo. Paper cover. 4*a.* or 5*d.* (1*a*)

REVENUE AND AGRICULTURAL DEPARTMENT.

Forest Flora of the School Circle, North-Western Provinces, being a descriptive list of the indigenous woody plants of the Shaharanpur and Dehra Dun districts and the adjoining portions of the Tehri-Garhwal State in the North-Western Provinces, with Analyses. Double-Crown 16mo. Full cloth. Re. 1-8. or 2*s.* (3*a.*)

Archæological Exploration in Chinese Turkestan. By Dr. M. A. Stein. Royal 4to. Cloth. Rs. 4 or 6*s.* (4*a.*)

Land Revenue Policy of the Indian Government. Royal 8vo. Cloth. 10*a.* or 1*s.* (4*a.*)

MILITARY DEPARTMENT.

Military Works Services Classified List and Distribution Return corrected up to 31st December 1901. Royal 8vo. Paper cover. 4*a*. or 5*d*. (1*a*.)

Indian Military Budget Estimate for the year 1902-1903. F'cap. Board. Re. 1-8*a*. or 2*s*. 3*d*. (8*a*.)

The Monthly Indian Army List for May 1902. Royal 8vo. Paper cover. Re. 1-8*a*. or 2*s*. 3*d*. (4*a*.)

FOREIGN DEPARTMENT.

Report on the Administration of the Civil and Military Station of Bangalore for the year 1900-1901. F'cap Board 8*a*. or 9*d*. (2*a*.)

Grammar and Vocabulary of Waziri Pashto. By J. G. Lorimer, Esq., I.C.S., Royal 8vo. Board, Rs. 3 or 4*s*. 6*d*. (6*a*.)

PUBLIC WORKS DEPARTMENT.

Budget Estimate of the Indo-European Telegraph Department for the year 1902-1903. F'cap Paper cover. 8*a*. or 9*d*. (1*a*. 6*p*.)

Budget Estimate of the Indian Telegraph Department for the year 1902-1903. F'cap. Paper cover. 8*a*. or 9*d*. (1*a*. 6*p*.)

History of Services of the Officers of the Engineer, Accounts and State Railway Revenue Establishments corrected to 31st December 1901. In two Volumes. Royal 8vo. Boards, Vol. I, *Rs*. 2 8*a*. or 3*s* 9*d*. (6*a*.). Vol. II, *Rs*. 2-8*a*. or 3*s*. 9*d*. (6*a*.). Complete *Rs*. 5 or 7*s*. 6*d*. (9*a*.)

List of Books published from 1st October 1901 to 31st March 1902.

LEGISLATIVE DEPARTMENT.

Chronological Tables of the Indian Statutes compiled, under the orders of the Government of India, by F. G. Wigley, Esq. Royal 8vo. Cloth. *Rs*. 4 or 6*s*. (7*a*.)

The Indian Penal Code (Act XLV of 1860), as modified up to the 1st July 1899, and with footnotes brought down to 1st April 1901. *Rs*. 2-8 or 3*s*. 9*d*. (6*a*.)

The Indian Factories Act, 1881, as modified up to the 1st April 1891 (with footnotes brought down to 1st July 1901). 5*a*. 6*p*. or 6*d*. (1*a*. 6*p*.)

Effect of Legislation for 1898, 1899, and 1900. *Re*. 1 or 1*s*. 6*d*. (2*a*.)

Chronological Tables of the Indian Statutes, 1901. *Re*. 1 or 1*s*. 6*d*. (2*a*.)

Digest of Indian Law Cases, Vol. I. Cloth bound. *Rs* 12 or 18*s*. (10*a*.)

Ditto ditto ditto. Quarter bound. *Rs*. 13 or 19*s*. 6*d*. (10*a*.)

Ditto ditto Vol. II. Cloth bound. *Rs*. 12 or 18*s*. (10*a*.)

Ditto ditto ditto. Quarter bound. *Rs*. 13 or 19*s*. 6*d*. (10*a*.)

Act IX of 1901. An Act further to amend the Indian Articles of War. 1*a*. or 1*d*. (1*a*.)

Act X of 1901. An Act further to amend the Court-fees Act, 1870. 1*a*. 3*p* or 1*d*. (1*a*.)

Act XI of 1901. An Act to facilitate the citation of certain Enactments and to amend and repeal certain obsolete Enactments.

Regulation III of 1901. A Regulation further to provide for the suppression of crime in certain frontier districts. 7*a*. 6*p*. or 9*d*. (1*a*. 6*p*.)

Regulation IV of 1901. A Regulation to make better provision for the suppression of murderous outrages in certain frontier tracts. 2*a*. 6*p*. (1*a*.)

Regulation V of 1901. A Regulation further to amend the Upper Burma Land and Revenue Regulation, 1899. 1*a*. 9*p*. or 2*d*. (1*a*.)

Regulation VI of 1901. A Regulation to repeal so much as is unrepealed of the Punjab Frontier Regulation, 1872, and of the Hazara Settlement Rules, 1*a*. or 1*d* (1*a*.)

Regulation VII of 1901. A Regulation to alter certain of the laws in force in the North-West Frontier Province, to declare that certain Enactments are in force therein, and to bar the application of certain others hereto. 11*a* or 1*s*. 3*d*. (2*a*.)

Corrigendum slip for Act XIII of 1900. 1*a*.

Title-page and Contents to Acts of 1901. 1*a*. 6*p* (1*a*.)

Index to Acts of 1901. 2*a*. 9*p*. or 3*d* (1*a*.)

The European Vagrancy Act, 1874 (IX of 1874), as modified up to 1st December, 1901. 6*a*. 6*p*. or 6*d*. (1*a*.)

The Chaukidars Act, 1856 (XX of 1856), as modified up to 1st December, 1901. 7*a*. 6*p*. or 8*d*. (1*a*.)

The Registration of Ships Act, 1841 and 1850 (X of 1841 and XI of 1850), as modified up to 1st December, 1893, and with footnotes brought down to 1st December, 1901. 7*a*. or 7*d*. (1*a*.)

Table showing the effect of Legislation in the Governor-General's Council during 1901. 5*p*. or 6*d*. (1*a*.)

LIST OF TRANSLATIONS AND TRANSLITERATIONS OF ACTS PUBLISHED FROM 1ST OCTOBER 1901 TO 31ST MARCH 1902.

The Cattle-trespass Act, 1871 (Act I of 1871) as modified up to the 1st April, 1901. In Urdu. 2*a*. (1*a*.)

Ditto. In Hindi. 2*a*. (1*a*.)

Act IX of 1901 (An Act further to amend the Indian Articles of War). In Urdu. 3*p*. (1*a*.).

Ditto. In Hindi. 3*p*. 1*a*.

Act X of 1901 (An Act further to amend the Court-fees Act, 1870). In Urdu. 3*p*. (1*a*.)

Ditto. In Hindi. 3*p*. (1*a*.)

HOME DEPARTMENT.

Chronological Tables for 1902, embodying Notifications by the Government of Bengal and Government of India prescribing holidays during the year with corresponding dates in English, Bengali, Velati, Fusli, etc. Royal 8vo. Paper cover. 4*a*. or 4*d*. (1*a*.)

Annual Report of the Sanitary Commissioner with the Government of India, 1900, with Appendices and Returns of Sickness and Mortality among European Troops Native Troops, and Prisoners in India, for the year. F'cap. Boards. *Rs*. 3 or 4*s*. 6*d*. (8*a*.)

DEPARTMENT OF REVENUE AND AGRICULTURE.

A Manual of Forest Engineering for India, Vol. II. By C. G. ROGERS, ESQ. Super-Royal 8vo. Cloth. Rs. 4 or 6*s*. (6*a*.)

List of Officers in the Survey and other Scientific and Minor Departments subordinate to the Government of India in the Department of Revenue and Agriculture, corrected to 1st July 1901. Royal 8vo. Board. 8*a*. or 9*d*. (2*a*.)

A Report on a Tour of Exploration of the Antiquities in the Tarai, Nepal, the Region of Kapilavastu during February and March, 1899 (illustrated by 32 plates). By Babu Purno Chandra Mukerji with a prefatory Note by Mr. Vincent A. Smith, B.A. (Archæological Survey of India, No. XXVI, Part I of the Imperial Series). Super-Royal 4to. Paper cover. Rs. 6-8 or 9*s*. 9*d*. (6*a*.)

List of Officers in the Survey and other Scientific and Minor Departments subordinate to the Government of India in the Department of Revenue and Agriculture. Corrected to 1st January, 1902. Royal 8vo. Paper cover. 8*a*. or 9*d*. (2*a*.)

Report of the Committee on the Establishment of Co-operative Credit Societies in India. F'cap Paper cover. 4*a*. or 5*d*. (2*a*.)

INDIAN FAMINE CHARITABLE RELIEF FUND.

Report of the Central Executive Committee, Indian Famine Charitable Relief Fund, 1900, with Complete Accounts and Proceedings, including the Reports of the Provincial Committees. F'cap Board. Rs. 3-8 or 5*s*. 3*d*. (10*a*.)

FOREIGN DEPARTMENT.

Report on the working of the Thagi and Dakaiti Department for 1900. F'cap. Paper cover. 3*a*. or 3*d*. (1*a*.)

Report on the Administration of the Baluchistan Agency for 1900-1901. Re. 1-8 or 2s. 3d. (3a.)

Report on the Administration of Ajmer-Merwara for 1899-1900. F'cap. Board. Re. 1-8 or 2s. 3d. (6a.)

Report on the Administration of the Hyderabad Assigned Districts for the year 1900-1901. F'cap. Limp cover. Rs. 3-12 or 5s. 6d. (6a.)

Report on the Political Administration of the territories within the Central India Agency for 1900 1901. F'cap. Limp cover. Re. 1-8 or 2s. (3a.)

Annotated Returns of the Dispensaries in Central India for 1900. F'cap. Limp cover. Re. 1-8 or 2s. (3a.)

FINANCE AND COMMERCE DEPARTMENT.

List of Officers in the Finance and Commerce Department. Corrected to *September, December* 1901; January, 1902 4a or 5d. (1a.) each.

Papers relating to the proposed Establishment of a Central Bank in India. F'cap. Boards. Re. 1 or 1s. 6d. (4a.)

Administration Report of the Mint at Bombay and Calcutta for 1900-1901. F'cap. Paper cover. Re. 1 or 1s. 6d. (2a.)

Schedule IV of the Indian Tariff Act (VIII of 1878) of 1902. Royal 8vo. Stitched. 6a. or 6d. (1a.)

STATISTICAL DEPARTMENT.

Trade and Navigation Accounts of British India for the months of October 1901 to January 1902. Royal 8vo. Stitched. 8a. or 9d. (2a.) each

Accounts of the External Land Trade of British India for the months of August to November 1901. Royal 8vo. Stitched. 8a. or 9d. (2a.) each.

Accounts relating to the Trade carried by Rail and River in India in the quarter ending June 1901, compared with the corresponding periods of the years 1899 and 1900 No. 1 of 1901-1902. F'cap. Paper cover. 8a. or 9d. (2a.)

Trade and Navigation of British India with Foreign Countries and Coasting Trade in the year ending 31st March 1901.—Annual Statement for 1900-1901, 35th issue, Volume II. Super-Royal Board. Rs. 2 or 3s. (7a.)

Accounts of the Trade carried by Rail and River in India in the official year 1900-1901 and the four preceding years, 13th issue. F'cap Board. Re. 1 or 1s. 6d. (6a.)

Trade of the French Possessions in India and of Aden in the year ending 31st March 1900 and previous years. F'cap. Paper cover. 12a. or 1s. 2d. (2a.)

Statistics of Mineral Production in India in the ten years 1891 to 1900. F'cap. Paper cover. 2a. or 2d. (1a.)

COMPTROLLER-GENERAL.

Finance and Revenue Accounts of the Government of India for 1900-1901. F'cap. Board. Rs. 2 or 3s. (8a.)

Appropriation Report on the Accounts of the Government of India for 1900-1901. By A. F. Cox, Esq. F'cap. Board. 8a. (5a).

ACCOUNTANT-GENERAL, BENGAL.

History of Services of Gazetted and other Officers serving under the Government of Bengal. Corrected to 1st July 1901. Royal 8vo. Boards. Rs. 5 or 7s. 6d. (12a.)

MILITARY DEPARTMENT.

The Monthly Indian Army List for October, 1901 to March, 1902. Royal 8vo. Paper cover. Re 1-8 or 2s. 3d. (4a. each).

Treatise on Military Carriages.—Indian Supplement, 1901, by Major C. T. Bell, R.A. Royal 8vo. Cloth. Rs. 7-8 or 11s. 3d. (7a.)

Mountain Warfare.—Extracts from, in Urdu and Hindi. Super Royal 16mo. Paper cover. 3a. or 3d. (1a.) each.

Musketry Regulations for the Native Army (Provisional issue), 1901. In Urdu. 5a. or 5d. (1a. 6p.)

Ditto. In Hindi. 5a. or 5d (1a. 6p.)

Ditto. In Gurmukhi. 6a. 9p. or 7d. (1a 6p.)

Army Regulations, India, Vol. IX (Volunteers) 1901. Royal 8vo. Board. Re. 1 or 1s 6d. (4a.)

Army Regulations, India (Regulations and Orders for the Army in India), Vol. II, 1901. Royal 8vo. Board. Part A. Re. 1 or 1s. 6d. (4a.) Part B. 12a. or 1s. 2d. (4a.) Complete, Re. 1-12. or 2s. 8d. (8a.)

Signalling—Appendix to the Authorised Signalling Instructions as applicable to India. In Urdu, Hindi, 1901. Royal 16mo. Paper cover. Re. 1 or 1s. 6d. (2a.) each.

Return of Wrecks and Casualties in Indian Waters for the year 1900. F'cap. Stiff cover. 12a or 1s. (3a.)

PUBLIC WORKS DEPARTMENT.

Forms and Enclosures to the Rules for the Preparation of Railway Projects, 1900. F'cap. Paper cover. Rs. 5 or 7s. 6d. (2a.)

Public Works Department Classified List and Distribution Return of Establishment. Corrected up to 31st December, 1901. Super-Royal 8vo. Paper cover. Rs. 2 or 3s. (4a.)

Classified List (Public Works Department), Subordinate Establishment. Corrected up to 31st December, 1901. Super-Royal 8vo. Paper cover. 4a. or 4d. (1a.)

List of new books for sale at the Thomason College, Roorkee, which were not advertised before.

Roorkee Treatise on "Railways," 4th Edition, revised by F. Wolley Dod, F.C.H. Price Rs. 3 per copy.

Roorkee Treatise on "Irrigation Works." By Lieutenant-Colonel J. Clibborn, I.S.C., B.A., L.C.E., C.I.E. Price Rs. 9 per copy.

Roorkee Treatise on "Sanitary Engineering." Compiled by Lieutenant-Colonel J. Clibborn, I.S.C., B.A., L.C.E. Price Rs. 4-8 per copy.

Roorkee Manual of "Applied Mechanics," Volume II. The stability of structures mostly by graphic methods. by Lieutenant-Colonel J. H. C. Harrison, R.E. Price Rs. 8-2 per copy.

Roorkee Manual of Hydraulics Price per copy Re. 1-4. (No. XIX, Elementary Treatise). By E. F. Tipple, Esq., B.A.

Designs for Wooden Bridges, together with rules for calculating the area of waterway, &c., and Plates. By late Rai Bahadur Kunhya Lal. Price per set Rs. 4-2

Pamphlet on Examination for Acid Radicals: Tables giving Analysis of Acids. Price per copy 6a.

Pamphlet on Examination for Acid Bases: Tables giving Analysis of Metallic bases. Price 3a. per copy.

Pamphlet on Note on Masonry Arches (College publication). Price 4a. per copy.

Pamphlet on Small Direct Well Pumping Installations. Price 4a. per copy.

Pamphlet on Experiments made on the passage of water through the sand of the Chenab River at the Khanki Weir. By Lieutenant-Colonel J. Clibborn, I.S.C., C.I.E. Price per copy 12a.

Indian Household Account Book for a period of two years, comprising Daily Table Expense Account, Bread, Butter and Milk Account Dhobey's Account, Servants' Wages Account, etc. Price Rs. 3 per copy.

Cash must accompany order. Articles are sent by V. P. P. to persons in Government employment only.

Application is to be made to the Curator, Thomason College Book Depôt, Roorkee.

List of books published by Meteorological Department during the current quarter.

Report on the Kodaikanal and Madras Observatories for the period 1st April to 31st December 1901. By C. Michie Smith. Quarto. Paper cover.

Monthly Weather Review of Indi for the month of December 1901. By W. L. Dallas (illustrated by 5 plates). Quarto. Paper cover. Re 1.

List of books published by Meteorological Department from 1st October, 1901 to 31st March, 1902.

Monthly Weather Review of India, from June to November 1901. By W. L. Dallas (illustrated by five plates). Quarto. Paper cover. Re. 1 per month.

Annual Summary of the Monthly Weather Review for 1900. By John Eliot (illustrated by six plates). Quarto. Paper cover. Re. 1.

Report of the Director, Government Observatory, Bombay, for the year ending 31st December, 1901. By N. A. F. Moos Quarto. Paper cover.

Indian Meteorological Memoirs, Volume XII, Part II. By John Eliot. Quarto. Paper cover. Rs. 3.

Indian Meteorological Memoirs, Volume XIII. By John Eliot. Quarto. Paper cover. Rs 5.

Half-yearly list of new books and periodicals for sale at the Library of the Asiatic Society of Bengal, 57 Park Street, Calcutta.

ASIATIC SOCIETY'S PUBLICATIONS.

Proceedings Nos. 9 to 11 of 1901 and No. 1 of 1902 at 8*a*.
Journal, Part I, No. 2 of 1901, at Rs. 2.
„ Part II, No. 2 of 1901, at Rs. 2.
„ Part III, No. 2 of 1901, and Part III, No. 1 of 1902, at Rs. 2.

BIBLIOTHECA INDICA.

Upamitibhavaprapanca katha. Fasc. 4 at 6*a*.
Catapatha Brahmana. Vol. I, Fasc. 5, at 6*a*.
Varsakriy a kaumudi. Fasc. 3 and 4, at 6*a*.
Nityacarapaddhati. Fasc. 2 and 3, at 6*a*.
Apastamba Sranta Sutra. Vol III, Fasc. 16, at 6*a*.
Mahabhasyaprodipodyata. Vol. II, Fasc. 2 and 3, at 6*a*
Al-Muquddasai. (English.) Vol. I, Fasc. 2, at 12*a*.

NOTICE TO SUBSCRIBERS.

SUBSCRIBERS are hereby informed that, unless complain of non-receipt of any number is made to the Publisher of the series within three months of the date of publication, the benefits of the subscription rates for copies ost in transit will not be allowed, and full rates will be charged. The price per copy of each of the four series at subscription rates and at full rates is shown below —

	Per copy. Subscription rate. Town.			Mofussal.		
	Rs.	A.	P.	Rs.	A.	P.
Calcutta Series	0	8	9	0	10	3
Each of the Madras, Bombay and Allahabad Series ...	0	5	3	0	5	9

	Full rate. Town.			Mofussal.		
	Rs.	A.	P.	Rs.	A.	P
Calcutta Series	2	0	0	2	0	0
Each of the Madras, Bombay and Allahabad Series ...	1	0	0	1	0	0

The Indian Law Reports.

Published under Authority.

THE Indian Law Report published under the authority of the Governor-General in Council, appear in monthly parts, published as soon as possible after the first of each month at Calcutta, Madras, Bombay, and Allahabad, and comprise four series—one for the Calcutta High Court, a second for the Madras High Court, a third for the Bombay High Court, and a fourth for the Allahabad High Court. The cases heard by the Privy Council on appeal from each High Court are reported in the Series for that High Court. Cases heard by the Privy Council on appeal from Provinces in India not subject to any High Court are reported in the Calcutta Series.

The Calcutta Series is distributed by the Bengal Secretariat Book Depôt, and the Madras, Bombay, and Allahabad Series are distributed direct from Madras, Bombay, and Allahabad respectively.

In supersession of the previous advertisements, on and from the 1st January 1889 the terms of subscription and sale will be as follows for current issues as well as for back numbers of the reports from 1876:—

Terms of subscription payable annually in advance.

For the complete series, *including postage* (Inland rate) Rs. 22-8.

Ditto ditto (Overland rate) Rs. 28.

	Without postage.			With postage.		
	Rs.	A.	P.	Rs.	A.	P.
For the Calcutta Series	10	0	0	12	8	0
,, each of the Madras, Bombay, and Allahabad Series	6	0	0	7	0	0
,, a part of the Calcutta Series purchased separately (*inclusive of postage in India*)	...	...		2	0	0
,, a part of each of the Madras, Bombay, and Allahabad Series purchased separately (*inclusive of postage in India*)	.....			1	0	0

The following are the rates at which deductions will be made for parts out of print and at which duplicate copies will be supplied to subscribers when required in place of copies lost in transit, provided complaint of non-receipt is made to the Publisher within three months of the date of publication :—

	For town.			For mufassal.		
	Rs.	A.	P.	Rs.	A.	P.
For the Calcutta Series, per copy ...	0	8	9	0	10	3
,, each of the Madras, Bombay, and Allahabad Series, per copy ...	0	5	3	0	5	9
,, the Calcutta Series. For the year	7	2	6	8	6	3
,, each of the Madras, Bombay and Allahabad Series. For the year	4	4	6	4	11	3

Persons desiring to subscribe for or purchase the Report should apply to—

The Superintendent, Government Press, Madras.
,, Superintendent, Government Central Press, Bombay.
,, Curator of Government Books, North-Western Provinces and Oudh.
,, Officer in charge, Bengal Secretariat Book Depôt.

Orders and subscriptions for 1902 should be at once registered and remitted by money-order payable to the Treasurer, Bengal Secretariat, Calcutta.

ADVERTISEMENTS will be received for publication on the wrappers of the Indian Law Reports, Calcutta Series, at the following rates, payable in advance—

	One page.	Half page.	Quarter page.
	Rs.	Rs.	Rs.
For one issue ...	20	14	9
,, three issues ...	55	36	4
,, six ,, ...	100	68	45
,, nine ,, ...	145	96	64
,, twelve ,, ...	180	12	80

SEVERAL volumes of the BENGAL LAW REPORTS, from August 1868 to December 1875, and FULL BENCH RULINGS, Parts I and II, are available at the following rates:—

	Without postage.			With postage.		
	Rs.	A.	P.	Rs.	A.	P.
Benga Law Reports, for one year ... Single copies, Rs. 2 per copy.	0			22	8	0
Full Bench Rulings, Parts I and II ...	20	0	0	22	8	0

Obtainable at the Bengal Secretariat Book Depôt, Writers' Buildings, Calcutta.

Remittances to be forwarded to the Treasurer, Bengal Secretariat, Writers' Buildings, Calcutta.

The complete series of the INDIAN LAW REPORTS for the years 1876 to 1885, 1887, and 1890 to 1901 having now been reprinted, are available, and may be purchased for all the years, or any particular year, on application to the Officer in charge, Bengal Secretariat Book Depôt.

The wanting parts of the Reports for the remaining years are being reprinted, and complete Reports from the beginning to date will be available shortly. The subscription, Rs. 22-8 per annum, should be remitted in advance to the Treasurer, Bengal Secretariat.

Notice.

THE *CALCUTTA GAZETTE.*

The 1st March 1901.—From this date the subscription to, and postage for, the *Calcutta Gazette* will be at the following rates, payable in advance:—

Per annum.	For Calcutta. Rs.	A.	For the Mufassal, including postage. Rs.	A.
Entire *Gazette*	15	0	20	0
Parts I, Ia and Ib together ...	5	0	7	8
Part II	1	0	2	12
Parts III, IV and IVA together	4	0	6	0
,, V and VI together ..	2	0	3	0
Appendix (Marine Notifications)	1	0	2	12
Supplement	5	0	7	8
Per issue.				
Entire *Gazette*	0	8	0	10
Supplement	0	4	0	5

N.B.—Separate Parts of each issue of the *Gazette*, and occasionally important Rules and Extracts, can be obtained from the Officer in charge, Bengal Secretariat Book Depôt, at the rate of one anna for every sixteen pages or a fraction thereof. Postage according to weight.

RATES FOR ADVERTISEMENTS in the *Calcutta Gazette*:—

Full page, per issue	Rs. 20
Half ,, ,, ,, ...	,, 10

Casual advertisements, 4 annas per line.

Annual Statement of the Sea-borne Trade and Navigation of the Bengal Presidency and of its Chief Port (Calcutta), and each of its Subordinate Ports Chittagong, Balasore, Cuttack, Pooree, and Narainguge), Volumes I and II. Price Rs. 20 for 1899-1900. Published at the Calcutta Custom House Previous years' volumes can also be obtained at the same price.

NOTICE TO SUBSCRIBERS.

SUBSCRIBERS are hereby informed that, unless complain of non-receipt of any number is made to the Publisher of the series within three months of the date of publication, the benefits of the subscription rates for copies ost in transit will not be allowed, and full rates will be charged. The price per copy of each of the four series at subscription rates and at full rates is shown below —

	PER COPY. Subscription rate.					
	Town.			Mofussal.		
	Rs.	A.	P.	Rs.	A.	P.
Calcutta Series	0	8	9	0	10	3
Each of the Madras, Bombay and Allahabad Series ...	0	5	3	0	5	9

	Full rate.					
	Town.			Mofussal.		
	Rs.	A.	P.	Rs.	A.	P
Calcutta Series	2	0	0	2	0	0
Each of the Madras, Bombay and Allahabad Series ...	1	0	0	1	0	0

The Indian Law Reports.

Published under Authority.

THE Indian Law Report published under the authority of the Governor-General in Council, appear in monthly parts, published as soon as possible after the first of each month at Calcutta, Madras, Bombay, and Allahabad, and comprise four series—one for the Calcutta High Court, a second for the Madras High Court, a third for the Bombay High Court, and a fourth for the Allahabad High Court. The cases heard by the Privy Council on appeal from each High Court are reported in the Series for that High Court. Cases heard by the Privy Council on appeal from Provinces in India not subject to any High Court are reported in the Calcutta Series.

The Calcutta Series is distributed by the Bengal Secretariat Book Depôt, and the Madras, Bombay, and Allahabad Series are distributed direct from Madras, Bombay, and Allahabad respectively.

In supersession of the previous advertisements, on and from the 1st January 1889 the terms of subscription and sale will be as follows for current issues as well as for back numbers of the reports from 1876:—

Terms of subscription payable annually in advance.

For the complete series, *including postage* (Inland rate) Rs. 22-8.

Ditto ditto (Overland rate) Rs. 28.

	Without postage.			With postage.		
	Rs.	A.	P.	Rs.	A.	P.
For the Calcutta Series	10	0	0	12	8	0
,, each of the Madras, Bombay, and Allahabad Series ...	6	0	0	7	0	0
,, a part of the Calcutta Series purchased separately (*inclusive of postage in India*)	.....			2	0	0
,, a part of each of the Madras, Bombay, and Allahabad Series purchased separately (*inclusive of postage in India*)	.....			1	0	0

The following are the rates at which deductions will be made for parts out of print and at which duplicate copies will be supplied to subscribers when required in place of copies lost in transit, provided complaint of non-receipt is made to the Publisher within three months of the date of publication:—

	For town.			For mufassal.		
	Rs.	A.	P.	Rs.	A.	P.
For the Calcutta Series, per copy ...	0	8	9	0	10	3
,, each of the Madras, Bombay, and Allahabad Series, per copy ...	0	5	3	0	5	9
,, the Calcutta Series. For the year	7	2	6	8	6	8
,, each of the Madras, Bombay and Allahabad Series. For the year	4	4	6	4	11	3

Persons desiring to subscribe for or purchase the Report should apply to—

The Superintendent, Government Press, Madras.
,, Superintendent, Government Central Press, Bombay.
,, Curator of Government Books, North-Western Provinces and Oudh.
,, Officer in charge, Bengal Secretariat Book Depôt.

Orders and subscriptions for 1902 should be at once registered and remitted by money-order payable to the Treasurer, Bengal Secretariat, Calcutta.

ADVERTISEMENTS will be received for publication on the wrappers of the Indian Law Reports, Calcutta Series, at the following rates, payable in advance—

	One page.	Half page.	Quarter page.
	Rs.	Rs.	Rs.
For one issue ...	20	14	9
,, three issues ...	55	36	4
,, six ,, ...	100	68	45
,, nine ,, ...	145	96	64
,, twelve ,, ...	180	12	80

SEVERAL volumes of the BENGAL LAW REPORTS, from August 1868 to December 1875, and FULL BENCH RULINGS, Parts I and II, are available at the following rates:—

	Without postage.			With postage.		
	Rs.	A.	P.	Rs.	A.	P.
Benga Law Reports, for one year ... Single copies, Rs. 2 per copy.	0			22	8	0
Full Bench Rulings, Parts I and II ...	20	0	0	22	8	0

Obtainable at the Bengal Secretariat Book Depôt, Writers' Buildings, Calcutta.

Remittances to be forwarded to the Treasurer, Bengal Secretariat, Writers' Buildings, Calcutta.

The complete series of the INDIAN LAW REPORTS for the years 1876 to 1885, 1887, and 1890 to 1901 having now been reprinted, are available, and may be purchased for all the years, or any particular year, on application to the Officer in charge, Bengal Secretariat Book Depôt.

The wanting parts of the Reports for the remaining years are being reprinted, and complete Reports from the beginning to date will be available shortly. The subscription, Rs. 22-8 per annum, should be remitted in advance to the Treasurer, Bengal Secretariat.

Notice.

THE *CALCUTTA GAZETTE.*

The 1st March 1901.—From this date the subscription to, and postage for, the *Calcutta Gazette* will be at the following rates, payable in advance:—

PER ANNUM.	For Calcutta.		For the Mufassal, including postage.	
	Rs.	A.	Rs.	A.
Entire *Gazette*	15	0	20	0
Parts I, Ia and Ib together ...	5	0	7	8
Part II	1	0	2	12
Parts III, IV and IVa together	4	0	6	0
,, V and VI together ...	2	0	3	0
Appendix (Marine Notifications)	1	0	2	12
Supplement	5	0	7	8
PER ISSUE.				
Entire *Gazette*	0	8	0	10
Supplement	0	4	0	5

N. B.—Separate Parts of each issue of the *Gazette*, and occasionally important Rules and Extracts, can be obtained from the Officer in charge, Bengal Secretariat Book Depôt, at the rate of one anna for every sixteen pages or a fraction thereof. Postage according to weight.

RATES FOR ADVERTISEMENTS in the *Calcutta Gazette*:—

Full page, per issue	Rs. 20
Half ,, ,, ,, ...	,, 10

Casual advertisements, 4 annas per line.

Annual Statement of the Sea-borne Trade and Navigation of the Bengal Presidency and of its Chief Port (Calcutta), and each of its Subordinate Ports Chittagong, Balasore, Cuttack, Pooree, and Narainguge), Volumes I and II. Price Rs. 20 for 1899-1900. Published at the Calcutta Custom House Previous years' volumes can also be obtained at the same price.

APPENDIX TO

The Calcutta Gazette.

WEDNESDAY, JULY 2, 1902.

NOTICES TO MARINERS.

GOVERNMENT OF BENGAL—MARINE DEPARTMENT.

NOTICE TO MARINERS—No. 184.

[First Publication.]

AFRICA, EAST COAST—PORT MOMBASA.

Light established on leading beacon.

THE British Admiralty has given notice (No. 304 of 1902) that on 10th April 1902, a *red fixed* dioptric light, elevated 68 feet above high water, and visible from a distance of 12 miles from the bearing of S. 60° W., through west and north, to N. 20° E, would be exhibited from the front or south-eastern black and white pillar on Ras Serani, port Mombasa.

This light in line with the white fixed light exhibited from the rear pillar, N. 51° W., leads through the fairway into the port.

Approximate position, lat. 4° 4½′ S., long. 39° 41′ E.

(*Variation 8° Westerly in 1902.*)

This Notice affects the following Admiralty Chart:—Port Mombasa, No. 666: Also, List of Lights, part VI, 1902, page 18; Africa Pilot, part III, 1897, page 491; and Supplement, 1900, page 31.

E. J. BEAUMONT, COMDR., R.I.M.,
Port Officer of Calcutta.

Published for general information.

C. B. BAYLEY,
Asst. Secy., Marine Department.

CALCUTTA, *the 28th June 1902.*

GOVERNMENT OF BENGAL—MARINE DEPARTMENT.

NOTICE TO MARINERS—No. 185.

[First Publication.]

AUSTRALIA, WEST—FREMANTLE.

Intended alteration in lights.

THE British Admiralty has given notice (No. 305 of 1902) that it is proposed to make the following alterations in the lights exhibited on the North and South breakwaters, Fremantle:—

(1) The white fixed light on the North breakwater will be altered to a *green fixed* light, elevated 46 feet above high water, and visible in clear weather from a distance of 12 miles. The light will be of the 4th order, and shown from an iron cylindrical tower, painted white.

(2) The light on the South breakwater will be altered to a *white occulting* light *every five seconds*, thus:—light, *three seconds;* eclipse, *two seconds;* and it will be elevated 44 feet above high water. The light will be dioptric of the 4th order, and shown from a cylindrical tower painted white.

Approximate position, lat. 32° 3′ S, long. 115° 44′ E.

Further notice will be given when these alterations are made.

This Notice affects the following Admiralty Charts:—Rottnest island to Warnbro' sound, No. 1058; Fremantle harbour, No. 1700: Also, List of Lights, part VI, 1902, Nos. 1041a, b; Australia Directory, vol. III, 1895, page 362; and Supplement, 1898, page 8.

E. J. BEAUMONT, COMDR., R.I.M.,
Port Officer of Calcutta.

Published for general information.

C. B. BAYLEY,
Asst. Secy., Marine Department.

CALCUTTA, *the 28th June 1902.*

GOVERNMENT OF BENGAL—MARINE DEPARTMENT.

NOTICE TO MARINERS—No. 186.

[First Publication.]

KOREA, SOUTH COAST—SHADWELL GULF.

A rock in approach.

THE British Admiralty has given notice (No. 311 of 1902) of the existence of a rock, with a depth of 3 feet over it off the southern coast of Shadwell peninsula, situated with the western extreme of the south-western island of the Cho Do group (352 feet) bearing S. 11° W., distant 6 cables, and the island summit (365 feet) S. 68° E. This rock is about 20 yards long, N. 11° W. and S. 11° E., and 5 yards broad.

Approximate position on Chart No. 2972, lat. 34° 45′ N., long. 128° 23½′ E.

(*Variation 4° Westerly in 1902.*)

This Notice affects the following Admiralty Charts:—Korean archipelago, No. 104; Shadwell and Cargodo gulf, No. 2972: Also, China Sea Directory, vol. IV, 1894, page 116; and Supplement, 1898, page 6.

E. J. BEAUMONT, COMDR., R.I.M.,
Port Officer of Calcutta

Published for general information.

C. B. BAYLEY.
Asst. Secy., Marine Department.

CALCUTTA, *the 28th June 1902.*

GOVERNMENT OF BENGAL—MARINE DEPARTMENT.

NOTICE TO MARINERS—No. 187.

[First Publication.]

AFRICA, NORTH-EAST—RED SEA, ARABIAN COAST.

Yenbo approach—Schermo and Thetis reefs marked by approach.

THE British Admiralty has given notice (No. 324 of 1902) that beacons have been erected on Schermo and Thetis reefs in the approach to Yenbo.

The beacon on Schermo reef consists of an iron column on a masonry base, the whole surmounted by a ball 30 feet above the sea.

Approximate position, lat. 24° 5′ N., long. 37° 51¼′ E.

The beacon on Thetis reef is of similar structure, but the height of the ball is only 10 feet above the sea.

Approximate position, lat. 23° 39′ N., long. 38° 2′ E.

This Notice affects the following Admiralty Chart:—Red sea, No. 8b: Also, Red Sea, &c., Pilot, 1900, pages 260, 263.

E. J. BEAUMONT, COMDR., R.I.M.,
Port Officer of Calcutta.

Published for general information.

C. B. BAYLEY,
Asst. Secy., Marine Department.

CALCUTTA, *the 28th June 1902.*

GOVERNMENT OF BENGAL—MARINE DEPARTMENT.

NOTICE TO MARINERS—No. 188.

[First Publication.]

EASTERN ARCHIPELAGO—TENIMBER ISLANDS.

Selaru—Reef reported to the north-westward.

THE British Admiralty has given notice (No. 328 of 1902) that the Master of the S.S. *Generaal Pel* reports the existence of a reef situated with the western point of Selaru island bearing S. 18° W. and the northern extreme of the same island S. 84° E.

Approximate position, lat. 8° 4′ S., long. 130° 51′ E.

(*Variation 2° Easterly in 1901.*)

This Notice affects the following Admiralty Chart:—Eastern Archipelago, No. 942b: Also, Eastern Archipelago, part I, 1890, page 457.

E. J. BEAUMONT, COMDR., R.I.M.,
Port Officer of Calcutta.

Published for general information.

C. B. BAYLEY,
Asst. Secy., Marine Department.

CALCUTTA, *the 28th June 1902.*

GOVERNMENT OF BENGAL—MARINE DEPARTMENT.

NOTICE TO MARINERS—No. 189.

[First Publication.]

AUSTRALIA, WEST.

Position of floating derelict vessel.

THE Acting Port Master, Brisbane, has given notice (No. 4 of 1902) that the Master of the steamer *St. Mary* reports that, on the eleventh of May last, he fell in with an abandoned barque named the *Geertruda Garanda*, dismasted, in the following approximate position, viz —

Latitude	...	...	... 33° 20′ South.
Longitude	...	...	... 100° 46′ East

E. J. BEAUMONT, COMDR., R.I.M.,
Port Officer of Calcutta.

Published for general information.

C. B. BAYLEY,
Asst. Secy., Marine Department.

CALCUTTA, *the 28th June 1902.*

GOVERNMENT OF BENGAL—MARINE DEPARTMENT.

NOTICE TO MARINERS—No. 173.

[Second Publication.]

AUSTRALIA, WEST—KING SOUND APPROACH.

Pitts' reef and Anchor bank—Particulars given.

WITH reference to Notice to Mariners No. 230, dated 27th July 1901, issued by this Office, the British Admiralty has given further notice (No. 286 of 1902):—

The following information, dated 10th April 1902, has been received from Mr. F. Pitts, Master, S S. *Sultan*, respecting the undermentioned shoals in the approach to King sound.

(*a*) A shoal, now named Pitts' shoal, about 3 miles long and with an estimated depth of 5 feet over it, exists in a position from which Cape Lévêque bears S. 9° E., distant 8 miles.

Approximate position, lat. 16° 14¾′ S., long. 122° 54½′ E.

CAUTION.—The leading mark for clearing Ferret bank (summit of High island in line with South Twin islet E. by S. ½ S.) leads close to the position of this rock and must in consequence no longer be used.

(*b*) Anchor bank is stated to dry 2 feet at low-water springs.

Approximate position, lat. 16° 19′ S., long. 123° 7′ E.

(*Variation 1° Easterly in 1902.*)

This Notice affects the following Admiralty Charts:—Cape Ford to Buccaneer archipelago, No. 1047; Buccaneer archipelago to Bedout island, No. 1048; Hall Point to Cape Berthole, No. 1052: Also, Australia Directory, vol. III, 1895, page 229.

E. J. BEAUMONT, COMDR., R.I.M.,
Port Officer of Calcutta.

Published for general information.

C. B. BAYLEY,
Asst. Secy., Marine Department.

CALCUTTA, *the 20th June 1902.*

GOVERNMENT OF BENGAL—MARINE DEPARTMENT.

NOTICE TO MARINERS—No. 174.

[Second Publication.]

KOREA, WEST COAST—PING YANG INLET APPROACH.

Naniwa shoal—Extension reported.

THE British Admiralty has given notice (No. 287 of 1902) of the existence of a sandbank, with a depth of 4¼ fathoms over it, in the approach to Ping Yang inlet, situated with Sei tau, bearing S. 19° W., distant $4\frac{6}{10}$ miles, and So sha ki S. 34° E.

Approximate position on Chart No. 1656, lat. 38° 36½′ N., long 124° 47½′ E.

This danger is connected with Naniwa shoal and the shoals to the north-eastward by depths of from 3 to 4¼ fathoms

(*Variation 4° Westerly in 1902.*)

This Notice affects the following Admiralty Charts:—Approaches to Ping Yang inlet, No. 1257; Ping Yang inlet, No. 1656: Also, China Sea Directory, vol. IV, 1894, page 41; and Supplement, 1898, page 3.

E. J. BEAUMONT, COMDR., R.I.M.,
Port Officer of Calcutta.

Published for general information.

C. B. BAYLEY,
Asst. Secy., Marine Department.

CALCUTTA, *the 20th June 1902.*

GOVERNMENT OF BENGAL—MARINE DEPARTMENT.

NOTICE TO MARINERS—No. 175.

[Second Publication.]

AUSTRALIA, WEST—GASCOYNE RIVER.

Babbage island—Character of light.

WITH reference to Notice to Mariners No. 173, dated 13th August 1898, issued by this Office, the British Admiralty has given further notice (No. 290 of 1902) that the light on Babbage island has been permanently altered to a *fixed* light: in other respects, however the light remains as before.

Approximate position, lat. 24° 52½′ S., long. 113° 38¾′ E.

This Notice affects the following Admiralty Charts:—Cape Cuvier to Champion bay, No. 1056; Shark bay, No. 518; South Bejaling to Gascoyne road, No. 712: Also, List of Lights, part VI, 1902, No. 1028; Australia Directory, vol. III, 1895, page 312; and Supplement, 1898, page 6.

E. J. BEAUMONT, COMDR., R.I.M.,
Port Officer of Calcutta.

Published for general information.

C. B. BAYLEY,
Asst. Secy., Marine Department.

CALCUTTA, *the 20th June 1902.*

GOVERNMENT OF BENGAL—MARINE DEPARTMENT.

NOTICE TO MARINERS—No. 176.

[Second Publication.]

KOREA, EAST COAST—COMMEMORATION BAY.

Rock in approach.

THE British Admiralty has given notice (No. 292 of 1902) that the Master of the S.S. *Okunimaru* reports that his vessel struck on a rock, with an estimated depth of 12 feet over it, in the southern approach to Commemoration bay (Urusan ko).

Approximate position, lat. 35° 21′ N., long. 129° 28′ E.

This danger has been placed on the Charts as a rock with less than 6 feet over it and marked P. D.

This Notice affects the following Admiralty Chart :—Japan, No. 2347 : Also, China Sea Directory, vol. IV, 1894, page 138 ; and Supplement, 1898, page 7.

E. J. BEAUMONT, COMDR., R.I.M.,
Port Officer of Calcutta.

Published for general information.

C. B. BAYLEY,
CALCUTTA, *the 20th June 1902.* *Asst. Secy., Marine Department.*

GOVERNMENT OF BENGAL—MARINE DEPARTMENT.

NOTICE TO MARINERS—No. 177.

[Second Publication.]

JAPAN—YEZO, SOUTH COAST.

Fukushima and Fukuyama bays—Rocks.

THE British Admiralty has given notice (No. 293 of 1902) of the existence of the undermentioned dangers in Fukushima and Fukuyama bays :—

(1) A rock, with a depth of 2¾ fathoms over it, situated with Sirakami saki light-house, bearing S. 38° W., distant $3\frac{8}{10}$ miles, and Miyanouta stream N. 64° W.

(2) A rock, named Benkei iso, with a depth of 1½ fathoms over it, is situated at a distance of $4\frac{4}{10}$ cables N. 39° E. from the above rock. The five-fathom contour line extends about one cable to the eastward from Benkei iso.

(3) A rock, with a depth of 4¾ fathoms over it, situated with Fukuyama light-house (Benten shima), bearing N. 6° E., distant 3½ cables, and Sirakami saki light-house S. 73° E.

Approximate position, Sirakami light-house, lat. 41° 24′ N., long. 140° 12′ E.

(*Variation 5° Westerly in 1902.*)

This Notice affects the following Admiralty Chart :—Tsugaru strait, No. 2441 : Also, China Sea Directory, vol. IV, 1894, page 568.

E. J. BEAUMONT, COMDR., R.I.M.,
Port Officer of Calcutta.

Published for general information.

C. B. BAYLEY,
CALCUTTA, *the 20th June 1902.* *Asst. Secy., Marine Department.*

GOVERNMENT OF BENGAL—MARINE DEPARTMENT.

NOTICE TO MARINERS—No. 178.

[Second Publication.]

JAPAN, SOUTH COAST—Kii.

Fuku ura—Shirukuboshi and Benzodashi Rocks.

The British Admiralty has given notice (No. 294 of 1902) of the existence of the undermentioned rocks in Fuku ura:—

(1) A rock, named Shirukuboshi, with a depth of 3¾ fathoms over it, situated with Kamekoshi, bearing N. 61° W., distant 7 cables, and western extreme of Flat head S. 5° W.

Approximate position, lat. 33° 28¼′ N., long. 135° 45½′ E.

(2) A rock, named Benzodashi, with a depth of 1¾ fathoms over it, is situated at a distance of $1\frac{6}{10}$ cables N. 22° E. from Shirukuboshi.

These two rocks are connected by a ledge on which there is a depth of less than 4¾ fathoms.

Note.—There are two clusters of rocks at the head of the bay, north-eastward of the above position, which have the above names affixed to them on the Chart. These names should be expunged.

(*Variation 4° Westerly in 1902.*)

This Notice affects the following Admiralty Charts:—Kii channel to Owasi bay, No. 951; plan of Oosima harbour on Chart No. 356: Also, China Sea Directory, vol. IV, 1894, page 261.

E. J. Beaumont, Comdr., R.I.M.,
Port Officer of Calcutta.

Published for general information.

C. B. Bayley,
Asst. Secy., Marine Department.

Calcutta, *the 20th June 1902.*

GOVERNMENT OF BENGAL—MARINE DEPARTMENT.

NOTICE TO MARINERS—No. 179.

[Second Publication.]

JAPAN—Yezo island.

La Perouse strait—Rock reported in approach to.

The British Admiralty has given notice (No. 295 of 1902) that the Master of the S. S. *Hidakamaru* reports that his vessel struck on a rock in the eastern approach to La Perouse strait, off the north-east coast of Yezo, in approximately lat. 45° 20¾′ N., long. 142° 22′ E.

"A rock reported hereabouts" has been placed on the Charts in the above position.

This Notice affects the following Admiralty Chart:—Yezo island, No. 452: Also, China Sea Directory, vol. IV, 1894, page 587.

E. J. Beaumont, Comdr., R.I.M.,
Port Officer of Calcutta.

Published for general information.

C. B. Bayley,
Asst. Secy., Marine Department.

Calcutta, *the 20th June 1902.*

GOVERNMENT OF BENGAL—MARINE DEPARTMENT.

NOTICE TO MARINERS—No. 180.

[Second Publication.]

PACIFIC OCEAN—(South).

Tuamotu or Low archipelago—Reef reported to the southward.

The British Admiralty has given notice (No. 296 of 1902) that the Captain of the French vessel *Earnest Legouvé* reports that he passed on December 17th, 1901, 4 P.M., a reef about 100 yards long, in approximately lat. 35° 14′ S., long. 152° 58′ W.; and at 4-20 P.M. another reef was observed ahead. On going about the reef first sighted was seen to be breaking.

A reef marked Earnest Legouvé has been placed on the Charts in this position.

This Notice affects the following Admiralty Chart:—Pacific Ocean, Nos. 2683, 788, 783: Also, Pacific Islands, vol. III, 1900, page 27.

E. J. Beaumont, Comdr., R.I.M.,
Port Officer of Calcutta.

Published for general information.

C. B. Bayley,
Asst. Secy., Marine Department.

Calcutta, *the 20th June 1902.*

GOVERNMENT OF BENGAL—MARINE DEPARTMENT.

NOTICE TO MARINERS—No. 181.

[Second Publication.]

AUSTRALIA—QUEENSLAND, INNER ROUTE.

Trinity bay—Non-existence of shoal—Near course recommended.

WITH reference to Notice to Mariners No. 27, dated 4th February 1902, issued by this Office, the British Admiralty has given further notice (No. 297 of 1902) that further information, dated 3rd February 1902, has been received from Commander C. E. Monro, H.M. surveying vessel *Dart*, that, after ineffectually searching for the two shoals of 5¼ fathoms in the approach to Trinity bay about 2 miles south-westward of the track recommended, he is convinced that they do not exist, and that it is probable some mistake occurred on the part of the leadsman calling the soundings. They have therefore been expunged from the Charts.

Approximate position, lat. 16° 35′ S., long. 145° 43½′ E.

This Notice affects the following Admiralty Chart:—Cape Grafton to Hope islands, No. 2924: Also, Australian Directory, vol. II, 1898, page 336.

E. J. BEAUMONT, COMDR., R.I.M.,
Port Officer of Calcutta.

Published for general information.

C. B. BAYLEY,
Asst. Secy., Marine Department.

CALCUTTA, *the 20th June 1902.*

GOVERNMENT OF BENGAL—MARINE DEPARTMENT.

NOTICE TO MARINERS—No. 182.

[Second Publication.]

PACIFIC OCEAN—THE PHILIPPINE ISLANDS—SAMAR, SOUTH COAST.

Manikani island—Amended position of reef.

WITH reference to Notice to Mariners No. 152, dated 31st May 1902, issued by this Office, the British Admiralty has given further notice (No. 301 of 1902) that the position of the reef, with patches of 3 feet and a general depth of 2 fathoms over it, is reported to exist on the south coast of Samar, is situated with Gigoso point bearing N. 16° W., distant 4$\frac{1}{10}$ miles and northern extremity of Manikani island S. 85° E.

Approximate position on Chart No. 962, lat. 11° 1′ N., long. 125° 31′ E.

(*Variation 1° Easterly in 1902.*)

This Notice affects the following Admiralty Charts:—Sulu sea, No. 2578; South part of Samar island on Chart No. 962: Also, Eastern Archipelago, part I, 1890, page 348.

E. J. BEAUMONT, COMDR., R.I.M.,
Port Officer of Calcutta.

Published for general information.

C. B. BAYLEY,
Asst. Secy., Marine Department.

CALCUTTA, *the 20th June 1902.*

GOVERNMENT OF BENGAL—MARINE DEPARTMENT.

NOTICE TO MARINERS—No. 183.

[Second Publication.]

PACIFIC OCEAN—THE PHILIPINE ISLANDS—SAMAR, WEST COAST.

Kalbayok river—Light established.

THE British Admiralty has given notice (No. 302 of 1902) that a *white fixed* light, visible from a distance of 10 miles from the bearing of S. 68° E., through east and north, to N. 68° W., has been established on the south-east point of the entrance to Kalbayok river.

Approximate position, lat. 12° 4′ N., long. 124° 35½′ E.

(*Variation 1° Easterly in 1902.*)

This Notice affects the following Admiralty Charts:—Sulu sea, No. 2578; South part of Samar island on Chart No. 962: Also, List of Lights, part VI, 1902, page 108; and Eastern Archipelago, part I, 1890, pages 328, 329.

E. J. BEAUMONT, COMDR., R.I.M.,
Port Officer of Calcutta.

Published for general information.

C. B. BAYLEY,
Asst. Secy., Marine Department.

CALCUTTA, *the 20th June 1902.*

GOVERNMENT OF BENGAL—MARINE DEPARTMENT.

NOTICE TO MARINERS—No. 167.

[Third Publication.]

AUSTRALIA—VICTORIA.

Cape Otway light—Arc of visibility.

THE British Admiralty has given notice (No. 267 of 1902) that Cape Otway light (*white group flashing*) is visible from all directions.

Approximate position, lat. 38° 52′ S., long. 143° 31′ E.

NOTE.—Though this light is not screened in any way, it is obscured by the coast to the eastward and westward, but the bearings on which it opens of the land at various distances are not known.

This Notice affects the following Admiralty Charts:—Bass strait, No. 1695b; Rivoli bay to Cape Otway, No. 1062; Western approach to Bass strait, No. 1063: Also List of Lights, part VI, 1902, No. 1103; Australia Directory, vol. I, 1897, page 409; and Supplement, 1900, page 16.

E. J. BEAUMONT, COMDR., R.I.M.,
Port Officer of Calcutta.

Published for general information.

C. B. BAYLEY,
Asst. Secy., Marine Department.

CALCUTTA, *the 14th June 1902.*

GOVERNMENT OF BENGAL—MARINE DEPARTMENT.

NOTICE TO MARINERS—No. 168.

[Third Publication.]

EASTERN ARCHIPELAGO—FLORES SEA.

Tiger islands—A reef to the northward.

THE British Admiralty has given notice (No. 272 of 1902) that a reef now named Zwaan, about 5 miles long in a north-westerly and south-easterly direction, and which dries in places, is reported to exist off the north-east coast of the Tiger islands, situated with Tinabu island, bearing S. 59 W., distant 10 miles, and Karompa island, N. 88 W.

Approximate position, lat. 6° 24½′ S., long. 121° 18′ E.

(*Variation 2° Easterly in 1902.*)

This Notice affects the following Admiralty Chart:—Eastern Archipelago, No. 942a: Also Eastern Archipelago, part II, 1893, page 290; and Supplement, 1899, page 32.

E. J. BEAUMONT, COMDR., R.I.M.,
Port Officer of Calcutta.

Published for general information.

C. B. BAYLEY,
Asst. Secy., Marine Department.

CALCUTTA, *the 14th June 1902.*

GOVERNMENT OF BENGAL—MARINE DEPARTMENT.

NOTICE TO MARINERS—No. 169.

[Third Publication.]

EASTERN ARCHIPELAGO—SAPEH STRAIT APPROACH.

Gili Banta island—Reef reported.

THE British Admiralty has given notice (No. 278 of 1902) that a reef with a depth of 18 feet over it is reported to exist about 1½ miles to the south-eastward of Gili Banta island, Sapeh strait approach; it has been placed on the charts with Piek island, bearing S. 23° E., distant 3½ miles, and the northernmost of Low rocks, S. 65° W.

THE Bombay Government has given notice (No. 64 of 1902) that the buoy off Murdeshwar was removed on 19th May 1902.

Approximate position, lat. 8 27′ S., long. 119 19 E.

Depths of 30 to 35 fathoms were obtained around this reef, which is marked by discoloured water.

(*Variation 2° Easterly in 1902.*)

This Notice affects the following Admiralty Charts:—Eastern Archipelago, No. 941b; Lombok to Flores, No. 1696: Also Eastern Archipelago, part II, 1893, page 243.

E. J. BEAUMONT, COMDR., R.I.M.,
Port Officer of Calcutta.

Published for general information.

C. B. BAYLEY,
Asst. Secy., Marine Department.

CALCUTTA, *the 14th June 1902.*

GOVERNMENT OF BENGAL—MARINE DEPARTMENT.

NOTICE TO MARINERS—No. 170.

[Third Publication.]

AUSTRALIA—Port Curtis.

North Channel—Closed for ordinary navigation.

The Acting Portmaster, Brisbane, has given notice (No. 3 of 1902) that, in consequence of the decreasing depth at the inner end of the North Channel entrance to Port Curtis, it is no longer safe for ordinary navigation, and its use must be confined to small coasters, with local knowledge, by daylight.

The marks and lights hitherto existing as aids to the navigation of the North Channel will be discontinued from and after 10th May.

Masters of vessels must use the main entrance to Port Curtis.

Chart affected—No. 1900; Australia Directory, vol. 2.

E. J. Beaumont, Comdr., R.I.M.,
Port Officer of Calcutta.

Published for general information.

C. B. Bayley,
Calcutta, *the 14th June 1902.* *Asst. Secy., Marine Department.*

GOVERNMENT OF BENGAL—MARINE DEPARTMENT.

NOTICE TO MARINERS—No. 171.

[Third Publication.]

BAY OF BENGAL—Burma coast.

S.S. "Camorta"—Reported wreckage.

The Bombay Government has given notice (No. 61 of 1902) that the Master of S.S. *Chilka* reports having passed, on 12th May 1902, in latitude 15° 30′ N., longitude 96° 9′ E., the wreckage of S.S. *Camorta* in the Gulf of Martaban.

This Notice affects the following Admiralty Charts:—Koronge Island to White Point, No. 823; Cocanada to Bassein River, No. 830; and Bay of Bengal, No. 70.

E. J. Beaumont, Comdr., R.I.M.,
Port Officer of Calcutta.

Published for general information.

C. B. Bayley,
Calcutta, *the 14th June 1902.* *Asst. Secy., Marine Department.*

GOVERNMENT OF BENGAL—MARINE DEPARTMENT.

NOTICE TO MARINERS—No. 172.

[Third Publication.]

INDIA, WEST—Bombay coast.

North Kanara—Dart rock—Buoy off Murdeshwar removed.

The Bombay Government has given notice (No. 64 of 1902) that the buoy off Murdeshwar was removed on 19th May 1902.

E. J. Beaumont, Comdr., R.I.M.,
Port Officer of Calcutta.

Published for general information.

C. B. Bayley,
Calcutta, *the 14th June 1902.* *Asst. Secy., Marine Department.*

APPENDIX TO

The Calcutta Gazette.

WEDNESDAY, JULY 2, 1902.

FIRST QUARTER.

BENGAL LIBRARY CATALOGUE OF BOOKS

FOR THE

First Quarter ending 31st March 1902.

1	2	3	4	5
Serial number.	Registration number.	Title, with an English translation of the same when not in that language, the language of the book, and the subject.	Name of author, translator, or editor of the book, or any part of it.	Place of printing and publication.
		UNI-LINGUAL BOOKS.		
		ASSAMESE BOOKS.		
		LANGUAGE.		
		Educational—		
1	141	Varna Sikshá. Instruction in the Alphabet. Part I.	Baladeva Mahánta	2, Goábágán Street, Calcutta; Nowgong, Assam.
2	1872	Akharachináki Ag-chhová. Knowledge of the Alphabet. Part I.	Sraddhá Charan Chaudhurí ...	6, College Square, Calcutta; Margheritá, Assam.
3	1873	Ditto Seha-chhová. Ditto Part II.	Ditto ...	Ditto ditto ...
		MISCELLANEOUS.		
4	1724	Asamíyá Pranaya Gán. Assamese Love Songs.	Bhakatarám Datta Chaudhurí ...	2, Goábagán Street, Calcutta; Golághát, Assam.
5	80	Karati. Incantations	.....	6, College Square, Calcutta; Dibrugar, Assam.
		POETRY.		
6	1866	Bhímacharit. Life of Bhíma	Ráma Sarasvatí	25-1, Scott's Lane, Calcutta; Dibrugar Assam.
		RELIGION.		
7	93	Lakshmí Charitra. Acts of the Goddess Lakshmi. (C.)	Ditto	6, College Square, Calcutta; Dibrugar, Assam.
		BENGALI BOOKS.		
		ART.		
1	1901	Sahaj Setár-Sikshá. Easy Instruction in Playing on the Setár.	Satís Chandra Datta	127, Masjidbári Street, Calcutta ...
		BIOGRAPHY.		
2	1723	Ramaníratna. Jewel of a Woman ...	Nava Kumár Datta	260-1, Masjidbárí Street; 3-1, Nílamani Mitra's Street, Calcutta.
3	1	Sankshipta Mohámmad Charit. A Brief Life of Muhammad.	Mahammad Abdul Aziz	Kumárkhali ... ...
4	1745	Dharmma Jívan. Religious life ...	Jnánánanda Ráy Chaturdhurín ...	6, Bhím Ghosh's Lane, Calcutta ...
5	1784	Navín Samrát. The New Emperor ...	Ramaní Mohan Mallik	48, Grey Street; 20, Cornwallis Street, Calcutta.
6	1772	Srí Srí Rámakrishna Punthi. The Book on Srí Srí Rámakrishna.	Akshay Kumár Sen	115-2, Grey Street, Calcutta ... ...
7	1882	Srí Amiya Nimái Charit. The Nectar of the Life of Nimái. Part V.	Sisir Kumár Ghosh	2, Ananda Chatterji's Lane, Calcutta ...
8	1926	Srímat Haridás Thákurer Jívan Charit. Life of the Great Haridás Thákur.	Achyuta Charan Chaudhurí ...	4, William's Lane, Calcutta; Mainá, Sylhet.
		DRAMA.		
9	30	Annapúrná. A Name	Sailendra Bhúshan Datta ...	Dvárbhángá ... ...
10	32	Pancham Veda Vá Mahábhárata Nátya Kávya. The Fifth Veda or the Mahábhárata Dramatised. No. 89.	Praphulla Chandra Mukherji ...	24; 23; Beadon Street, Calcutta ...
11	32	Ditto ditto, No. 90	Ditto ditto ...	Ditto ditto ...
12	33	Tomári. Yours Only	Ditto ditto ...	Ditto ditto ...
13	36	Vení Sanhár Nátak. The Drama of the Braiding of the Lock. (T.)	Jyotirindra Náth Tagore	55, Upper Chitpur Road, Calcutta ...
14	1725	Prithu Rájár Satásvamedha Yajna. One Hundred Horse Sacrifices performed by King Prithu.	Dhana Krishna Sen	17, Nanda Kumár Chaudhuri's 2nd Lane; 201, Cornwallis Street; Calcutta.
15	1762	Chandírám. A Name	Satís Chandra Chatterji ...	147, Báránasí Ghosh's Street; the Bhárat Sangít Samiti; Calcutta.
16	1847	Kulina Kula Sarvasva. Purity of Descent is Everything to a Kulin Bráhman.	Rámanáráyan Sarmá	38-2, Bhaváni Charan Datta's Street, Calcutta.
17	1868	Chanda Kausik. Kausik (Visvámitra) the Terrible. (T.)	Jyotirindra Nath Tagore	25-1, Scott's Lane, Calcutta .. ...
		FICTION.		
18	3	Naváb Nandiní. The Nawab's Daughter ...	Dámodar Mukherji	17, Nanda Kumár Chaudhuri's 2nd Lane; 201, Cornwallis Street; Calcutta.
19	200	Karmakshetra. Sphere of Action ...	Ditto	98, Harrison Road, Calcutta... ..
20	1765	Mrinmayí. A Name	Ditto	98, Harrison Road; 201, Cornwallis Street; Calcutta.
21	12	Mokshadá. A Name	Satís Chandra Mukherji	The Ghosh Press; Nápitpárá Lane; Hugli.
22	25	Ratna Yugal. A Pair of Jewels	Jaygopál Gosvámí	62, Amherst Street; 30, Cornwallis Street; Calcutta.
23	31	Muktámálá. A Garland of Pearls ...	T. N. Mukherji	46, Bechu Chatterji's Street; 63, College Street; Calcutta.
24	77	Cháhár Darves. The Four Dervishes ..	.....	70, Kulutolá Street, Calcutta ...
25	95	Máyávini. Enchantress	Pánchkari De	108, Báránasí Ghosh's Street; 201, Cornwallis Street; Calcutta.
26	160	Satmá. Step-mother	Yogíndra Náth Chatterji	336, Upper Chitpur Road; 19, Vrindávan Basák's Street, Calcutta.
27	243	Kusum-Kuntalá. A Name	Umá Charan Bhaumik	The Gopínáth Press, Dacca .. ...
28	1727	Panchain Vatsarer Kuntalín Puraskár. Reward for Kuntalin (a kind of hair oil) for the Fifth Year.	H. Basu	5, Sivanáráyan Dás's Lane; 62, Bowbázár Street; Calcutta.
29	1735	Máyávini. Enchantress	Surendramohan Bhattácháryya ..	52, Nimu Gosvámi's Lane; 108, Garánhátá Street; Calcutta.
30	1746	Smasán. The Burning-ground .. .	Nivárun Chandra Kar	6, Bhím Ghosh's Lane, Calcutta ...
31	1753	Kukurír Upákhyán. The Story of a Bitch ..	Asutosh Banerji	6, College Square, Calcutta ... ...

First Quarter ending 31st March 1902.

6	7	8	9	10	11	12	13
Name or firm of printer and of publisher.	Date of issue from the press or of the publication.	Size and number of sheets, leaves, or pages.	Number of edition and number of copies of which the edition consists.	Printed or litho'd.	Price at which the book is sold to the public.	Name and residence of the proprietor of copyright, or any part of it.	Copyright registered or not.
					Rs. A. P.		
Kunja Vihárí Dás; D. N. Baruá and Sons.	1902. Jan. 20	Dy. 12mo; 24	3rd; 2,000	P.	0 1 0	The author, Nowgong, Assam.	
Nivárun Chandra Ghosh; Devesvar Gagai.	1901. Dec. 20	Dy. 12mo; 38	1st; 1,000	P.	0 1 0	The author.	
Ditto ditto ...	„ 3	Dy. 12mo; 34	1st; 1,000	P.	0 1 0	Ditto.	
Kunja Vihárí Dás; the author ...	Oct. 30	D. fc. 16mo; 28	1st; 1,000	P.	0 3 0	The author, Golághát, Assam.	
Nivárun Chandra Ghosh; Siva Náth Bhattácháryya.	1902. Jan. 10	Dy. 12mo; 30	1st; 1,000	P.	0 4 0	The publisher.	
Sányál and Co.; Devendra Náth Ganguli.	1901. Dec. 12	Dy. 12mo; 44	2nd; 2,000	P.	0 1 0	Haliráma Kalitá, Dibrugar, Assam.	
Nivárun Chandra Ghosh; Siva Náth Bhattácháryya.	1902. Jan. 15	Dy. 12mo; 12	4th; 2,000	P.	0 0 6	Siva Náth Bhattácháryya.	
Dína Náth Mánná; Basák and Sons	1901. Dec. 5	Dy. 8vo; 104	2nd; 1,000	P.	1 4 0	Basák and Sons, 127, Masjidbárí Street, Calcutta.	
Visvesvar Chakravartí; the author.	Nov. 10	Dy. 12mo; 66	1st	P.	0 8 0	The author, 3-1, Nílamani Mitra's Street, Calcutta.	
Kunja Vihárí Dás; the Muhammadan Association, Kusthiyá.	Nov.	Dy. 12mo; 152	1st; 1,000	P.	0 8 0	The author, Thánú Syámpur, Daulatpur, Nadia.	
U. C. Basu and Co.; the author ...	Oct. 25	F'cap 8vo; 56	1st; 100	P.	.....	.....	
Bagaláchuran Barál; S. C. Majumdár.	Nov. 29	Dy. 12mo; 51	1st; 1,000	P.	.....	The author, Meherpur, Nadia.	
P. C. Mukherji; the author ...	„ 25	Rl. 8vo; 589	1st; 1,000	P.	2 8 0	.....	
Kesava Lál Ráy	Dec. 2	Dy. 8vo; 236	1st; 1,500	P.	1 0 0	The author, 2, Ananda Chatterji's Lane, Bágházár, Calcutta.	
Amríta Lál Ghosh; Aniruddha Charan Chaudhurí.	1896. Oct. 13	Dy. 12mo; 113	1st; 1,000	P.	0 6 0	The author, Mainá, Sylhet.	
Kánta Vihárí Misra; the author ...	1902. Jan. 8	Dy. 12mo; 90	1st; 1,000	P.	.....	.....	
P. C. Mukerji and Sons; Prabhát Chandra Mukherji.	„ 6	Dy. 8vo; 32	1st; 1,000	P.	.....	.....	
Ditto ditto ...	„ 6	Dy. 8vo; 32	1st; 1,000	P.	.....	.....	
P. C. Mukherji and Sons; Satíndra Sevak Nandi.	Jan. 7	Dy. 12mo; 113	1st; 1,000	P.	0 8 0	.....	
Devendra Náth Bhattácháryya ...	1901. Dec. 14	Cr. 8vo; 159	1st; 1,000	P.	1 6 0	6, Dváraká Náth Tagore's Lane, Calcutta.	
S. C. Chakravartí; Gurudás Chatterji.	Oct. 25	Dy. 8vo; 236	1st; 1,000	P.	1 8 0	The author, Bowbázár, Calcutta.	
Jagadbandhu Dás Ghosh; Sasibhúshan Sen.	Nov. 27	Dy. 8vo; 181	1st; 2,000	P.	0 12 0	Vijay Chandra Sinha.	
Arunoday Ráy	Dec. 1	Cr. 8vo; 108	1st; 20,000	P.	0 4 0	The Vangavásí Firm, Calcutta.	
Sányál and Co.	„ 4	D. cr. 16mo; 88	1st; 1,000	P.	0 12 0	The author, 9, Store Road, Báliganj, Calcutta.	
S. C. Chakravartí; Gurudás Chatterji.	„ 5	Dy. 12mo; 300	1st; 1,000	P.	2 0 0	The author, Calcutta.	
Kunja Vihárí De	1902. Jan. 2	D. fc. 16mo; 379	1st; 1,000	P.	1 8 0	The author, 38, Mániktalá Street, Calcutta.	
Kunja Vihárí De; Gurudás Chatterji.	1901. Nov. 15	D. fc. 16mo; 350	10th; 1,000	P.	1 8 0	Ditto ditto.	
Krishnapada Ghosh; the author ...	1902. Jan. 10	Dy. 8vo; 22	1st; 1,000	P.	0 2 0	The author, Nápitpárá Lane, Hugli.	
Upendra Náth Chakravartí; Yogendra Náth Mukhopádhyáy.	1901. Dec. 24	Dy. 8vo; 300	1st; 1,000	P.	1 8 0	The author, Sántipur.	
R. Datta; Jnánendra Náth Háldár	1902. Jan. 7	D. cr. 16mo; 324	1st; 1,000	P.	1 4 0	The author.	
Asviní Kumár Háldár	„ 1	Dy. 8vo; 83	1st; 1,000	P.	0 2 0	The Hitavádi Office, Calcutta.	
N. C. Pál; Gurudás Chatterji ...	„ 16	Cr. 8vo; 98	1st; 2,000	P.	1 0 0	The author.	
Nílamani Dhar; Santirám De ...	„ 12	Dy. 12mo; 138	1st; 1,000	P.	1 0 0	.....	
Gopináth Basák; the author ...	1901. Dec. 25	Dy. 12mo; 114	1st; 1,000	P.	0 10 0	.....	
Púrna Chandra Dás	Oct. 6	Rl. 24mo; 152	1st; 5,000	P.	.....	The author.	
Kálí Kumár Datta; the author ...	„ 18	Dy. 8vo; 218	1st; 2,000	P.	1 0 0	The author, 52, Nimu Gosvámi's Lane, Calcutta.	
N. C. Basu and Co.; the author ...	Nov. 5	Dy. 12mo; 198	1st; 500	P.	0 12 0	.....	
Nivárun Chandra Ghosh ...	„ 16	Dy. 12mo; 9	1st; 5,000	P.	0 0 3	The author.	

1 Serial number.	2 Registration number.	3 Title, with an English translation of the same when not in that language, the language of the book, and the subject.	4 Name of author, translator, or editor of the book, or any part of it.	5 Place of printing and publication.
		***BENGALI BOOKS*—contd.**		
		FICTION—*concld.*		
32	1771	Sarayú. A Name	Surendra Náth Ráy	221, Cornwallis Street, Calcutta ...
33	1786	Smasánvásiní Upanyás. The Story of a Woman living on the Burning-ground.	Kálí Kinkar Yas	25-3, Tárak Chatterji's Lane; 113, Upper Chitpur Road; Calcutta
34	1790	Biláti Upanyás. European Stories ...	Upendra Bhúshan Chaudhurí ...	66, Ahírítolá Street; 162, Bowbázár Street, Calcutta.
35	1791	Chá kulír Atmakáhiní. The Story of a Tea-garden cooly told by himself.	Yogendra Náth Chatterji ...	66, Ahírítolá Street; 201, Cornwallis Street; Calcutta.
36	1801	Tárakanáth Granthávalí. Collection of Works by Tárakanáth. Vol. I. Nos. 11 and 12 (together).	Tárak Náth Visvás	21, Balarám Ghosh's Street; 231, Upper Chitpur Road; Calcutta.
37	1801	Ditto ditto, No. 1	Ditto	Ditto ditto ...
38	1824	Dárogár Daptar. No. 111. Vol. I. Visham Bhram. A Dárogá's Papers. No. 111—A Serious Error.	Priya Náth Mukherji	66, Ahírítolá Street; 162, Bowbázár Street; Calcutta.
39	1824	Ditto ditto, No. 112 ...	Ditto	Ditto ditto ...
40	1880	Chapalá. A Name	Kshetra Mohan Ghosh	336, Upper Chitpur Road; Calcutta; Burdwan.
41	1838	Rahasya Pradípa. Lamp of Mystery ...	Avinás Chandra Datta	133, Masjidbárí Street; 25, Krishna Dás Pal's Lane; Calcutta.
42	1848	Nerá Haridás. The Bald Haridás. A Name	.....	38-2, Bhaváni Charan Datta's Lane, Calcutta.
43	1898	Golápa Sundarí. A Name	Vaishnav Charan Basák	127, Masjidbárí Street; 98-1, Upper Chitpur Road; Calcutta.
44	1899	Devayáni Upanyás. The Story of Devayáni	Ditto	127, Masjidbarí Street; 98-3, Upper Chitpur Road; Calcutta.
45	1924	Amrita Pulin. The Isle of Nectar ...	Nanlál Banerji	63, Bechu Chatterji's Street, Calcutta...
		HISTORY (INCLUDING GEOGRAPHY).		
46	133	Jhánsír Rájakumár. The Prince of Jhánsí	Sakhárám Ganes Deuskar ...	64, Akhil Mistri's Lane, Calcutta ...
47	199	Sachitra Buyar Yuddha. The Boer War with Illustration.	Priyanáth Mukherji	66, Ahírítolá Street; 162, Bowbázár Street, Calcutta.
		Educational—		
48	7	Vangadeo O Asámer Sankshipta Vivaran. A Brief Account of Bengal and Assam.	Dína Náth Sen	The Genderiyá Press, Dacca ... ...
49	37	Ditto Ditto ...	Ditto	Ditto ... ...
50	55	Sankshipta Vángálár Itihás. A Short Account of Bengal.	Mahámahopádháya Nílamani Nyáyalankár.	24, Girís Vidyáratna's Lane, Calcutta...
51	57	Bhárater Aitihásik Páth. Lessons on the History of India.	Vrindávan Dhar	The Asutosh Press, Dacca ... ...
52	59	Vángálár Aitihásik Páth. Lessons on the History of Bengal.	Ditto	Ditto ... ...
53	91	Pratham Sikshá Vángálár Itiháser Prasnottar. A Catechism of Pratham Sikshá Vángálár Itihás.	Mahendra Náth Vidyáratna ...	1, Mahendra Gosvámi's Lane; 68, College Street; Calcutta.
54	1853	Pratham Sikshá Vángálár Itihás. "History of Bengal for Beginners."	Ráj Krishna Mukherji	46, Bechu Chatterji's Street; 30, Cornwallis Street; Calcutta.
55	150	Barddhamán Jelár Mánachitra. Map of the District of Burdwan.	Sasí Bhúshan Chatterji	8, Dixon's Lane, Calcutta ... ...
56	151	Hugli Jelár Mánachitra. Map of the District of Hugly.	Ditto	Ditto ... ...
57	152	Hávará Jelár Mánachitra. Map of the District of Howrah.	Ditto	Ditto ... ...
		LANGUAGE.		
58	1707	Vangabhásha O Sáhitya. Bengali Language and Literature.	Dínes Chandra Sen	25-1, Scott's Lane, Calcutta ... ...
59	2	Sankshipta Vángálá Abhidhán. An Abridged Bengali Dictionary.	....	163, Kálighát Road, Bhawanipur ...
		Educational—		
60	27	Nava Sikshá. New Instruction ...	Chiranjív Sarmá	2, Goábágan Street, Calcutta ...
61	1850	Náná Páth. Miscellaneous Lessons. Part I.	Bhárat Chandra Banerji	2, Goábágan Street, Calcutta; Mogaltuli; Dacca.
62	177	Sikshá, Instruction. Part I	Gangádhar Banerji and Isán Chandra Ghosh.	114, Amherst Street, Calcutta ...
63	177	Ditto, Part II	Ditto ditto ...	Ditto ...
64	73	Nava Sikshá. New Lessons	Srínáth Chanda	25-1, Scott's Lane, Calcutta ... ...
65	71	Sukhabodha Vyákaran. A Grammar Easy to Understand.	Ditto	Ditto ... ...
66	158	Lakshman Charit. Life of Lakshman ...	Kedáreswar Tarkaratna Bhattácháryya.	336, Upper Chitpur Road; 17, Hara Lál Dás's Lane; Calcutta.
67	175	Jnán Sopán. Stepping-stone to Knowledge	Súryya Kumár Adhikárí ...	203-2; 25; Cornwallis Street, Calcutta.
68	92	Sachitra Varna Parichaya. An Illustrated Alphabetical Primer. Part I.	Rámánanda Chatterji	6, College Square, Calcutta ...
69	1885	Priyapáth. Good Lessons, Part I ...	Lalit Chandra Chatterji ...	Ditto ... ...
70	50	Bálya Suhrid. Friend of Childhood ...	Umá Pada Ráy	6, College Square; 64, College Street; Calcutta.
71	145	Padya Varnamálá. An Alphabetical Primer in Verse.	.....	10, Sambhu Chandra Chatterji's Street; Calcutta; Chinsura.
72	97	Vijnán Sikshá. Instruction in Science. Parts I and II (together).	Trailokya Náth Mukherji ...	46, Bechu Chatterji's Street; 63, College Street; Calcutta.
73	99	Níti Sikshá. Instruction in Morals. Parts I and II (together).	Trailokya Náth Mukherji and Priya Lál De., B.C.S.	Ditto ditto ...

First Quarter ending 31st March 1902—continued.

6	7	8	9	10	11	12	13
Name of firm or printer and of publisher.	Date of issue from the press or of the publication.	Size and number of sheets, leaves, or pages.	Number of edition and number of copies of which the edition consists.	Printed or lithd.	Price at which the book is sold to the public.	Name and residence of the proprietor of copyright, or any part of it.	Copyright registered or not.
	1901.				Rs. A. P.		
Prahlád Chandra Dás; the author	Nov. 29	Dy. 12mo; 180	1st; 1,000	P.	0 10 0	The author.	
Kálí Prasád Ráy; Kánái Lál Sil...	„ 23	Dy. 8vo; 156	1st; 2,000	P.	1 0 0	The publisher.	
Rájendra Náth Sen; the author ...	„ 5	Dy. 12mo; 236	1st; 2,000	P.	1 8 0	The author.	
Rájendra Náth Sen; Gurudás Chatterji.	„ 3	Dy. 12mo; 140	1st; 2000	P.	0 12 0	The author, 201, Cornwallis Street, Calcutta.	
Gopál Chandra Láhirí; S. Visvás and Brothers.	.....	Rl. 8vo; 64	1st; 1,000	P.	0 2 0	The author, 231, Upper Chitpur Road, Calcutta.	
Ditto ditto ...	.....	Rl. 8vo; 32	1st; 1,000	P.	0 2 0	Ditto ditto.	
Rájendra Náth Sen; Upendra Bhúshan Chaudhurí.	Nov. 5	Dy. 12mo; 48	1st; 2,000	P.	0 6 0	The author, 88-1, Keránibágán East Lane, Calcutta.	
Ditto ditto ...	„ 5	Dy. 12mo; 48	1st; 2,000	P.	0 6 0	Ditto ditto.	
Nílamani Dhar; the author ...	Oct. 29	Dy. 12mo; 287	1st; 1,000	P.	1 0 0	.....	
Yogendra Nath Chakravartí; the author.	Dec. 5	Dy. 8vo; 132	1st; 1,300	P.	0 12 0	The author, 25, Krishna Dás Pál's Lane, Calcutta.	
Arunoday Ráy	„ 9	Dy. 12mo; 281	1st; 2,000	P.	1 0 0	The Vangavásí Firm, Calcutta.	
Dína Náth Mánná; the author ...	Nov. 27	Dy. 12mo; 77	5th; 1,000	P.	1 0 0	The author, 127, Masjidbarí Street, Calcutta.	
Ditto ditto ...	Dec. 10	Dy. 12mo; 186	2nd; 1,000	P.	1 0 0	Ditto ditto.	
G. C. Basu and Co.	1898	Dy. 8vo; 163	2nd; 1,000	P.	1 0 0	The author, Maunpurí, North-Western Provinces.	
	1901.						
Haridás Ghosh; the author ...	Dec. 27	D. fc. 16mo; 60	1st; 500	P.	0 6 0	The author.	
	1902.						
Rájendra Náth Sen; Upendra Náth Chaudhurí.	Jan. 4	Dy. 12mo; 72	1st; 1,000	P.	0 4 0	The author, 88-1, Keránibágán Lane, Calcutta.	
	1901.						
Bhánu Chandra Dás; Priya Náth Sen.	Dec. 16	Dy. 12mo; 58	41st; 3,000	P.	0 6 0	.....	
	1902.						
Ditto ditto ...	Jan. 30	Dy. 12mo; 58	42nd; 3,000	P.	0 6 0	.....	
	1901.						
Sasí Bhúshan Kritiratna Bhattácháryya.	Dec. 9	Dy. 12mo; 74	1st; 1,000	P.	0 4 0	The author, 26, Niyogípukur West Lane, Calcutta.	
	1902.						
Revati Mohan Dás; Harirám Dhar	Jan. 25	Dy. 12mo; 122	1st; 1,000	P.	0 6 0	.....	
Ditto ditto ...	„ 31	Dy. 12mo; 61	1st; 1,000	P.	0 3 0	.....	
Naphar Chandra Sarkár; Mánik Lál De.	„ 1	Dy. 12mo; 84	... 2,000	P.	0 4 0	Mánik Lál De, 68, College Street, Calcutta.	
	1901.						
R. Datta; Yadu Náth Mukherji ...	Dec. 4	Cr. 16mo; 96	64th; 10,000	P.	0 4 0	Kshetra Mohan Mukherji.	
	1902.						
Vihárí Lál Chakravartí ...	Jan. 10	29"×22"; 1sht.	1st; 1,000	L.	1 0 0	The author, 8, Dixon's Lane, Calcutta.	
Ditto	„ 10	22"×20"; 1sht.	1st; 1,000	L.	1 0 0	Ditto ditto.	
Ditto	„ 10	22"×20"; 1sht.	1st; 1,000	L.	1 0 0	Ditto ditto.	
	1901.						
Sányál and Co.	Oct. 5	D.cr.16mo; 646	2nd; 1,500	P.	4 0 0	Dínes Chandra Sen, B.A., 28, Syámpukur Street, Calcutta.	
	1902.						
Nírad Varan Dás	Jan. 1	Cr. 8vo; 278	1st; 16,000	P.	.....	.....	
Kunja Vihárí Dás	„ 1	Dy. 12mo; 70	1st; 150	P.	0 3 0	Trailokya Náth Sányál, Narikeldángá, 24-Parganas.	
	1901.						
Kunja Vihárí Dás; Satis Chandra Mukherji.	Dec. 6	Dy. 12mo; 70	1st; 100	P.	0 3 0	Bharat Chandra Dás, Mogaltuli, Dacca.	
	1902.						
Gopál Chandra Niyogí	Jan. 1	Cr. 8vo; 80	1st; 1.000	P.	0 4 0	The authors.	
Ditto	„ 1	Cr. 8vo; 214	1st; 500	P.	0 3 0	Ditto.	
Sányál and Co.	„ 1	D.cr.16mo; 70	1st; 100	P.	.....	The author, Mymensingh.	
	1901.						
Ditto	Dec. 22	D.cr. 16mo; 48	15th; 2,000	P.	0 3 0	Ditto.	
	1902.						
Nílamani Dhar; the author ...	Jan. 16	Dy. 12mo; 137	1st; 2,000	P.	0 12 0	.....	
P. C. Sáhá; B. Banerji and Co. ..	„ 1	D.cr. 16mo; 76	1st; 1,000	P.	0 3 0	The author and the publisher, Calcutta.	
Nivárun Chandra Ghosh ...	Jan. 1	Dy. 12mo; 60	10th; 10,000	P.	0 1 0	The author, Allahabad.	
	1901.						
Ditto	Dec. 12	Dy. 12mo; 53	11th; 3,000	P.	0 3 0	The author.	
Nivárun Chandra Ghosh; the City Book Society.	„ 15	D.cr. 16mo; 124	7th; 4,000	P.	0 6 0	Ditto.	
	1902						
U. Rakshit; Sátkari Lál De ...	Jan. 1	Dy. 8vo.; 4	1st; 1,000	P.	0 0 3	The publisher, Chinsura.	
R. Datta; Jnánendra Náth Háldár.	„ 21	D.cr.16mo; 66	1st; 100	P.	.....	The author, Calcutta.	
Ditto ditto ...	„ 1	D.cr.16mo; 74	1st; 100	P.	.....	The authors, Calcutta.	

1	2	3	4	5
Serial number.	Registration number.	Title, with an English translation of the same when not in that language, the language of the book, and the subject.	Name of author, translator, or editor of the book, or any part of it.	Place of printing and publication.
		BENGALI BOOKS—contd.		
		LANGUAGE—*contd.*		
		Educational—contd.		
74	101	Vividha Páth. Miscellaneous Lessons ...	Nakari Ghosh, B.A.	46, Bechu Chatterji's Street, Calcutta...
75	98	Sisubodh. Instruction for Children ...	Sarat Chandra Chaudhurí ...	Ditto ditto ...
76	1	Sáhitya Parichaya. Introduction to Literature. Part II.	Ditto	Ditto ditto ...
77	57	Vividha Páther Parisishta. Appendix to Vividha Páth.	Nakari Ghosh	24, Giris Vidyáratna's Lane, Calcutta...
78	56	Sisu Páth. Lessons for Children. Part I	Prasanna Kumár Gupta ...	The Asutosh Press, Dacca; Maulaví Bazar, South Sylhet.
79	62	Nava Sáhitya Prasanga. New Discourses on Literature.	Nava Krishana Bhádurí, M.A. ...	The Asutosh Press, Dacca; Náráyanganj
80	79	Chárn Kathá. Good Stories	Nílakánta Vidyáratna	The Genderiyá Press; Dacca Library; Dacca.
81	36	Sisu Praves. Introductory Primer for Children.	Prasanna Chandra Vidyáratna ...	The Genderiyá Press, Dacca ...
82	26	Das Prishthár Vángálá Vyákaran. Bengali Grammar in Ten Pages.	Ditto ...	The Genderiyá Press; Dacca Library; Dacca.
83	25	Saral Vángálá Vyákaran Rachaná Pranáli Sabit. Easy Bengali Grammar with Composition.	Ditto ...	Ditto ditto ...
84	27	Sáhitya Pustak. Book of Literature ...	Ditto ...	Ditto ditto ...
85	28	Ditto ditto ...	Ditto ...	Ditto ditto ...
86	55	Prathama Sikshá. First Instruction ...	Isvar Chandra De	The Gopináth Press, Dacca ... ...
87	74	Bályasikshá. Instruction for Childhood ...	Rám Chandra Basu	The Náráyan Press, Mogaltuli, Dacca...
88	32	Bálya Páth. Lessons for Childhood ...	Gopál Chandra Banerji	Munsiganj, Dacca ... ...
89	7	Sisubodh Vyákaran. Grammar for the Instruction of Children.	Chandra Kánta Vidyálankár ...	The Sanátan Press, Chittagong; 63, College Street; Calcutta.
90	9	Saral Vyákaran. Easy Grammar ...	Mati Lál Vidyálankár	The Samiti Press, Rájsáh; 68, College Street; Calcutta.
91	5	Saral Varna Parichaya. Easy Alphabetical Primer. Part I.	Madhusúdan Jáná	The Nihár Press, Contai ... ...
92	1704	Gadyasár Bodhiká. A key to Gadyasár ...	Asutosh Dev	22-2, Jhámápukur Lane, Calcutta ...
93	1851	Sáhityásárer Sampúrna Vyákhyá. A Complete Key to Sáhityasár.	Mahendra Náth Vidyáratna ...	2, Goábágán Street; 57, College Street; Calcutta.
94	1842	Sriyukta Hem Chandra Bandyopádhyáya Pranita Kavitávalír Sampúrna Vyákhyá. A complete Key to Kavitávalí by Hem Chandra Banerji.	Ditto ...	17, Nanda Kumár Chaudhuri's 2nd Lane; 57, College Street; Calcutta
95	90	Bodhavikáser Saral Vyákhyá. An Easy Key to Bodhavikás.	Ditto ...	1, Mahendra Gosvámi's Lane; 68, College Street; Calcutta.
96	118	Parimal Páth Bodhini. A Key to Parimal Páth.	Bhárat Chandra Sarkár	1, Mahendra Gosvámi's Lane, Calcutta; Mymensingh.
97	134	Bodha Vikás Bodhini. A Key to Bodha Vikás.	Visvesvar Mitra	64, Akhil Mistri's Lane, Calcutta ...
98	168	Saral Nitir Sucháru Artha Pustak. A Good Key to Saral Níti.	Keturám Dás	5, Nílamádhav Sen's Lane, Calcutta; Dhubri.
99	197	Bodhoday Darpan. A Key to Bodhoday ...	Prasanna Kúmár Chakravartí ...	9, Mirzapur Street; 51-1, College Street; Calcutta.
100	38	Mukul Vikás. Expansion of Buds ...	.....	Dacca ... ...
101	35	Prakriti Prabandha Vikás. A Key to Prakriti Prabandha.	.....	The East Bengal Press, Dacca ...
102	36	Sadbháva Manjarí Vikás. A Key to Sadbháva Manjarí.	.....	Ditto ... ...
103	37	Kavitáranjan Bodhiní. A Key to Kavitáranjan.	.....	Ditto ... ...
104	69	Nimna Páth Bodhiní. A Key to Nimna Páth.	Umes Chandra Sen Gupta ...	The East Bengal Press; Patuatuli; Dacca.
105	68	Chárn Kathá Subodhiní. A Key to Chárn Kathá.	Chandra Kanta Vidyánidhi ...	The East Bengal Press, Dacca ...
106	32	Chhátra Sikshá Bodhiní. A Key to Chhátra Sikshá.	Rám Charán Vidyánidhi ...	The Genderiyá Press, Dacca ...
107	10	Padya Pustak Sahachar. A Companion to Padya Pustak.	Rajani Kánta Sen Gupta ...	The Isán Press, Dacca; Students' Library, Silchar, Cáchár.
108	31	Srijukta Prasanna Kumár Guha Pranita Saral Nitir Artha Pustak. A Key to Saral Niti by Prasanna Kumár Guha.	.....	Munsiganj, Dacca; Goalpárá, Dhubri...
109	2	Mánas Kusam Vikás. A Key to Mánas Kusum.	Vipin Vihárí Gánguli	Dacca ... ...
110	60	Jívan Sopán Vivriti. A Key to Jívan Sopán.	Ditto	The Asutosh Press; The Asutosh Library; Dacca.
111	3	Parimal Páth Bodhiní. A Key to Parimal Páth. Part I.	Giris Chandra Dám	Ditto ditto ...
112	4	Amiya Kavitávodhiní. A Key to Amiya Kavita.	Ditto	Ditto ditto ...
113	5	Tritíya Bhág Sikshá. A Key to Tritíyabhág	.....	The Asutosh Press, Dacca... ...

First Quarter ending 31st March 1902—continued.

6	7	8	9	10	11	12	13
Name or firm of printer and of publisher.	Date of issue from the press or of the publication	Size and number of sheets, leaves, or pages.	Number of edition and number of copies of which the edition consists.	Printed or litho'd.	Price at which the book is sold to the public.	Name and residence of the proprietor of copyright, or any part of it.	Copyright registered or not.
	1902.				Rs. A. P.		
R. Datta; P. Mukhopádhyáy and Sons.	Jan. 20	D.cr. 16mo; 144	1st; 250	P.	.....	The author, Calcutta.	
Ditto ditto ...	„ 20	Dy. 12mo; 80	1st; 50	P.	0 1 0	The author, Mymensingh.	
R. Datta	„ 2	Dy. 12mo; 60	3rd; 3,000	P.	0 3 0	Ditto.	
Sasí Bhúshan Kritiratna Bhattácháryya.	„ 1	Dy. 12mo; 60	1st; 250	P.	.....	The author, Sil's Free College, Calcutta.	
Revatí Mohan Dás; the author ...	„ 23	Dy. 12mo; 12	5th; 1,000	P.	0 0 3	.....	
Ditto ditto ...	Feb. 8	Dy. 12mo; 80	6th; 1,000	P.	0 4 0	.....	
Bhánu Chandra Dás; Rádhiká Mohan Basák.	„ 2	Dy. 12mo; 59	3rd; 1,500	P.	0 2 6	.....	
Bhánu Chandra Dás; the author ...	Jan. 17	Dy. 12mo; 57	24th; 2,000	P.	0 3 6	.....	
	1901.						
Ditto ditto ...	Dec. 28	Cr. 8vo; 10	1st; 1,000	P.	0 1 0	.....	
Ditto ditto ...	„ 28	Cr. 8vo; 49	1st; 10	P.	0 3 0	.....	
Ditto ditto ...	„ 28	Cr. 8vo; 50	1st; 400	P.	0 3 0		
Ditto ditto ...	„ 28	Cr. 8vo; 99	1st; 40	P.	0 6 0	.....	
	1902.					.....	
Gopí Náth Basák; Isvar Chandra De.	Feb. 5	Dy. 12mo; 20	8th; 1,000	P.	0 1 0	.....	
Lachhman Basák; Sítá Náth Pál ...	„ 19	Dy. 12mo; 60	3rd; 4,000	P.	0 1 6	.....	
	1901.						
Sarat Chandra Guha; Gopál Chandra Banerji.	Dec. 27	Dy. 12mo; 25	1st; 1,000	P.	0 1 0	.....	
	1902.						
B. Chaudhurí; Brajendra Náráyan De.	Jan. 4	Dy. 12mo; 56	18th; 2,000	P.	0 3 0	The author, Collegiate School, Chittagong.	
Nikunja Vihárí Chaudhurí; Chakravartí and Co.	„ 6	Dy. 8vo; 66	1st; 500	P.	0 4 0	The author, Mokhrum, Burdwan.	
Madhusúdan Jáná	„ 14	Dy. 12mo; 32	7th; 1,000	P.	0 1 0	The author, Níhár Press, Contai.	
	1901.						
Varadá Prasád Majumdár; the author.	Nov. 2	Dy. 12mo; 152	1st; 1,000	P.	0 6 0	The printer, 22-2, Jhámápukur Lane, Calcutta.	
Kunja Vihári Dás; Mánik Lál De	„ 30	Dy. 12mo; 240	1st; 1,500	P.	0 12 0	Mánik Lál De, 57, College Street, Calcutta.	
S. C. Chakravartí; Mánik Lál De	Dec. 2	Dy. 12mo; 204	2nd; 1,000	P.	0 12 0	The publisher, 57, College Street, Calcutta.	
	1902.						
Naphar Chandra Sarkár; Mánik Lál De.	Jan. 12	Dy. 12mo; 72	2nd; 5,000	P.	0 4 6	The publisher, 68, College Street, Calcutta.	
Naphar Chandra Sarkár; the author.	„ 15	Dy. 12mo; 36	3rd; 1,000	P.	0 6 0	The author, Mymensingh.	
	1901.						
Hari Dás Ghosh; Basanta Kumár Ghosh.	Dec. 31	Dy. 12mo; 48	1st; 2,000	P.	0 6 0	The author, 64, Akhil Mistri's Lane, Calcutta.	
	1902.						
Asutosh Ghoshál; the author ...	Jan. 2	Dy. 12mo; 26	1st; 500	P.	0 2 6	The author, Dhubri.	
Srí Náth De; the author ...	„ 27	Dy. 12mo; 144	1st; 1,600	P.	0 5 0	The author, Mayanáguri Model School, Jalpáiguri.	
Krishna Dás Basák; Umes Chandra Sen Gupta.	„ 12	Dy. 12mo; 168	1st; 1,000	P.	0 12 0	.....	
	1901.						
Ditto ditto ...	Dec. 25	Dy. 12mo; 168	1st; 1,000	P.	0 14 0	.....	
	1902.						
Ditto ditto ...	Jan. 9	Dy. 12mo; 178	1st; 1,000	P.	0 14 0	.....	
Ditto ditto ...	„ 10	Dy. 12mo; 177	1st; 1,000	P.	0 14 0	.....	
Krishna Dás Basák; Rájendra Náráyan De.	Feb. 14	Dy. 12mo; 57	1st; 1,000	P.	0 4 0	.....	
Krishna Dás Basák; Satís Chandra Basák.	„ 10	Dy. 12mo; 96	1st; 1,000	P.	0 10 0	.....	
Bhánu Chandra Dás; Sudhánsu Ranjan Pál.	Jan. 10	Dy. 12mo; 240	1st; 1,000	P.	0 1 6	.....	
	1901.						
Mathurá Náth De; The Students' Library.	Dec. 22	Dy. 12mo; 20	2nd; 1,000	P.	0 2 0	.....	
	1902.						
Sarat Chandra Guha; Vení Mádhav Ghosh Chaudhurí.	Jan. 25	Dy. 12mo; 21	5th; 2,000	P.	0 2 0	.....	
	1901.						
Revatí Mohan Dás; the author ...	Dec. 12	Dy. 12mo; 191	1st; 1,000	P.	0 14 0	.....	
	1902.						
Revatí Mohan Dás; The Asutosh Library.	Feb. 8	Dy. 12mo; 210	1st; 1,000	P.	0 14 0	.....	
	1901.						
Ditto ditto ...	Dec. 14	Dy. 12mo; 58	1st; 1,000	P.	0 6 0	.....	
Ditto ditto ...	„ 14	Dy. 12mo; 44	1st; 1,000	P.	0 6 0	.....	
Revatí Mohan Dás	„ 14	Dy. 12mo; 54	2nd; 1,000	P.	0 6 0	.....	

1 Serial number.	2 Registration number.	3 Title, with an English translation of the same when not in that language, the language of the book, and the subject.	4 Name of author, translator, or editor of the book, or any part of it.	5 Place of printing and publication.
		BENGALI BOOKS—contd.		
		LANGUAGE—*concld.*		
114	54	Kavitá Kumud Bodhiní. A Key to Kavitá Kumud.	.....	Gopí Náth Press; Asutosh Library; Dacca.
115	53	Padya Pustak Prathamabháger Artha. A Key to Padya Pustak, Part I.	.....	Dacca ... ...
116	52	Varna Sikshá Pranálí Dvitíya Bháger Artha. A Key to Varnasikshá Pranálí, Part II.	.....	Do. ... ...
117	51	Bodhavikás Bodhiní. A Key to Bodha Vikás.	Rádhá Kánta Datta	Do. ... ...
118	242	Kavitávalí Bodhiní. A Key to Kavitávalí...	Ráma Charan Vidyánidhi ...	Do. ... ...
119	241	Prakriti Prabandha Bodhiní. A Key to Prakriti Prabandha.	Ditto	Do. ... ...
120	18	Saral Kavitávalí Bodhiní. A Key to Saral Kavitávalí.	Vaikuntha Chandra Náth ...	Do. ... ...
121	16	Parimal Páth Bodhiní. A Key to Parimal Páth.	Ditto	Do. ... ...
122	91	Mánas Kusum Bodhiní. A Key to Mánas Kusum.	Ditto	Do. ... ...
123	92	Susikshá Bodhiní. A Key to Susikshá ...	Jánakí Náth Náth	Do. ... ...
124	90	Kavitá Ranjan Bodhiní. A Key to Kavitá Ranjan.	Kunja Vihárí Náth	Do. ... ...
125	18	Sikshá Sopán Bodhiní. A Key to Sikshá Sopán.	Ditto	Do. ... ...
126	20	Kavitá Sopán Bodhiní. A Key to Kavitá Sopán.	Ditto	Do. ... ...
127	93	Bodhavikás Bodiní. A Key to Bodhavikás	Ditto	Do. ... ...
128	89	Tritíya Bhág Sisusikshár Artha. A Key to Sisusikshá, Part III.	Dváraká Náth Pál	Do. ... ...
129	19	Bodha Vikás Bodiní. A Key to Bodha Vikás	Sarvesvar De	Do. ... ...
130	88	Dvitíya Bhág Varnasikshá Pranálír Saral Artha. An Easy Key to Varnasikshá Pranálí, Part II.	Dváraká Náth Pál	Do. ... ...
131	94	Sikshá Sopán Sikshá. A Key to Sikshá Sopán.	Vrajendra Náráyan De	The Vedavyás Press; School Library; Dacca.
132	95	Mukul Bodhiní. A Key to Mukul ...	.....	Dacca ... ...
133	96	Bodhavikás Bodhiká. A Key to Bodhavikás	Evád Ali Miyán	The Vedavyás Press, Dacca; Tripura ...
134	87	Kavitávalí Bodhini. Part I. A Key to Kavitávalí.	Vrajendra Náth Mitra	Dacca ... ...
135	100	Bhaktir Upahar Vivriti. A Key to Bhaktir Upahár.	.....	Do. ... ...
136	22	Bodha Vikás Bodhiní. A Key to Bodha Vikás.	Párvatí Charan Sinha	The Náráyan Press; Mogaltuli, Dacca...
137	72	Ditto ditto ...	Navín Chandra Chakravartí ...	Dacca ... ...
138	83	Priya Páth Bodhiní. A Key to Priya Páth	Gopí Mohan Datta	Do. ... ...
139	84	Mánas Kusum Bodhiní. A Key to Mánas Kusum.	.....	Do. ... ...
140	82	Parimal Páth Bodhiní. A Key to Parimal Páth.	Kesav Chandra Datta	Do. ... ...
141	84	Kávya Kaláp Bodhiní. A Key to Kávya Kaláp.	Kálí Náth Kar	The Vaikuntha Náth Press; Students' Library; Dacca.
142	83	Saral Kavitávalí Bodhiní. A Key to Saral Kavitávalí.	.....	Dacca ... ...
143	56	Prítihár Dípiká. A Key to Prítihár ...	.....	Mymensingh ... ...
		LAW.		
144	67	Deoyání Ádálater Padátik O Paroyáná. "Peon and Process of the Civil Court."	Vijaygopál Basu	25-1, Scott's Lane; 11, Old Baitakkhána 1st Lane; Calcutta.
145	1709	Chaukidárí Tokser Ain. The Chaukidári Act	Paramesa Prasanna Ráy ...	Ananda Chandra Chatterji's Lane; Calcutta.
146	1763	Jamidárí Darpan. Mirror of Jamindári Business. Part I.	Sasí Sekhar Ghosh	98, Harrison Road; 3-1, Rájá's Lane; Calcutta.
147	1906	Registárí Darpan. "Registration Manual"	Anukul Chandra Chatterji ...	6, Bhim Ghosh's Lane, Calcutta ...
		MEDICINE.		
148	2	Siddha Mushtiyoga. Well-tried *Mushtiyoga* Remedies. (N).	Haralál Gupta	17, Nanda Kumár Chaudhurí's 2nd Lane; 80, Beadon Street; Calcutta.
149	81	Pratikár. Remedy. (N).	Paresnáth Mahalánavís	30-5, Madan Mitra's Lane, Calcutta ...
150	59	Rog Ná Havár Upáy. Means to prevent Disease. (N).	Dr. S. N. Sen	39, Mirjápur Street; C. H. Medical School; Calcutta.
151	65	Amiya Path. The Path of Nectar. (E). ...	Rajaní Kánta Majumdár	Dacca ... ...
152	162	Saral Chikitsá. Easy Treatment. (E). ...	Bipin Vihárí Maitra	70, Kalutolá Street; 45 to 49, College Street; Calcutta.
153	1752	Homiopyáthik Upadansa Rogor Chikitsá. Homœopathic Treatment of Syphilis. (E).	Upendranáth Mukherji	24, Beadon Street, Calcutta; Jaynagar, 24-Parganas.
154	1768	Homiopethik Pratham Griha Chikitsá. The first Homœopathic Domestic treatment. (E).	Pratáp ChandrMajumdár ...	68, Bechu Chatterji's Street; 201, Cornwallis Street; Calcutta.

First Quarter ending 31st March 1902—continued.

8		9		10	11	12	13
Name or firm of printer and of publisher.	Date of issue from the press or of the publication.	Size and number of sheets, leaves, or pages.	Number of edition and number of copies of which the edition consists.	Printed or litho'd.	Price at which the book is sold to the public.	Name and residence of the proprietor of copyright, or any part of it.	Copyright registered or not.
	1902.				Rs. A. P.		
Gopí Náth Basák; the Asutosh Library.	Jan. 20	Dy. 12mo; 40	1st; 1,000	P.	0 6 0	.....	
Gopí Náth Basák; Vení Mádhav Ghosh Ráy Chaudhurí.	„ 25	Dy. 12mo; 17	4th; 2,000	P.	0 2 0	.....	
Ditto ditto ...	„ 28	Dy. 12mo; 24	5th; 2,000	P.	0 1 6	.....	
Gopí Náth Basák; the author ...	„ 17	Dy. 12mo; 96	2nd; 2,000	P.	0 8 0	.....	
	1901.						
Gopí Náth Basák; Sudhánsu Ranjan Pál.	Dec. 18	Dy. 12mo; 264	1st; 1,000	P.	0 1 6	.....	
Ditto ditto ...	„ 18	Dy. 12mo; 156	1st; 1,000	P.	0 12 0	.....	
Oyáhedbaks Sarkár; the Ripon Library.	„ 10	Dy. 12mo; 64	2,000	P.	0 14 0	.....	
Ditto ditto ...	„ 15	Dy. 12mo; 306	1st; 2,000	P.	0 14 0	.....	
	1902.						
Ditto ditto ...	Feb. 17	Dy. 12mo; 120	1st; 750	P.	0 14 0	.....	
Ditto ditto ...	„ 17	Dy. 12mo; 44	2nd; 1,000	P.	0 6 0	.....	
Oyáhedbaks Sarkár; Jánakí Náth Náth.	„ 11	Dy. 12mo; 108	1st; 500	P.	0 12 0	.....	
	1901.						
Ditto ditto ...	Dec. 17	Dy. 12mo; 24	8th; 2,000	P.	0 3 0	.....	
Ditto ditto ...	„ 17	Dy. 12mo; 40	1st; 1,000	P.	0 6 0	.....	
	1902.						
Ditto ditto ...	Feb. 23	Dy. 12mo; 122	4th; 2,000	P.	0 10 0	.....	
Oyáhedbaks Sarkár; the author ...	„ 11	Dy. 12mo; 24	14th; 1,000	P.	0 2 0	.....	
	1901.						
Ditto ditto ...	Dec. 15	Dy. 12mo; 108	3rd; 4,000	P.	0 3 0	.....	
	1902.						
Ditto ditto ...	Feb. 11	Dy. 12mo; 20	1st; 1,000	P.	0 3 0	.....	
Ditto ditto ...	„ 23	Dy. 12mo; 28	3rd; 1,000	P.	0 3 0	.....	
Oyáhedbaks Sarkár; Anáth Bandhu Chakravartí.	„ 23	Dy. 12mo; 148	1st; 1,000	P.	0 12 0	.....	
Oyáhedbaks Sarkár; the author ...	„ 25	Dy. 12mo; 120	1st; 1,000	P.	0 6 0	.....	
Munsí Kalim Uddin; Umes Chandra Sen Gupta.	Mar. 1	Dy. 12mo; 72	1st; 1,000	P.	0 1 6	.....	
Revati Mohan Dás; the Asutosh Library.	Feb. 24	Dy. 12mo; 191	1st; 1,000	P.	0 14 0	.....	
	1901.						
Lachhman Basák; the author ...	Dec. 25	Dy. 12mo; 107	2nd; 1,000	P.	0 3 0	.....	
	1902.						
Lachhman Basák; the Asutosh Library.	Feb. 2	Dy. 12mo; 40	3rd; 1,000	P.	0 10 0	.....	
Vihárí Lal Datta; the Students' Library.	„ 28	Dy. 12mo; 36	4th; 1,000	P.	0 3 0		
Ditto ditto	Jan. 20	Dy. 12mo; 72	5th; 1,000	P.	0 14 0		
Ditto ditto ...	Mar 1	Dy. 12mo; 36	5th; 1,000	P.	0 5 0		
Vihárí Lál Dátta; Dina Bandhu Basák.	Feb. 26	Dy. 12mo; 156	1st; 1,000	P.	0 14 0	....	
Vihárí Lál Datta; the Students' Library.	Jan. 16	Dy. 12mo; 108	2nd; 750	P.	0 14 0	.....	
Amiruddin Ahamad; Bhárat Chandra Sarkár.	Feb. 20	Dy. 12mo; 85	1,000	P.	0 6 0	....	
	1901.						
Sányál and Co.; the author ...	Dec. 28	D. cr. 16mo; 97	2nd; 2,000	P.	0 3 0	The author, 11, Old Baitakkhánd 1st Lane, Calcutta.	
Kesav Lál Ráy	Oct. 16	Dy. 8vo. 44	1st; 2,000	P.	0 4 0	The author, Sub-Deputy Magistrate, Rámpurhát.	
Kunja Vihárí De; Manmatha Náth Ghosh.	Nov. 1	Dy. 8vo; 560	2nd; 1,000	P.	2 8 0	Manmatha Náth Ghosh, 3-1, Rájá's Lane, Calcutta.	
U. C. Basu and Co.; the author ...	Nov. 28	Dy. 12mo; 138	5th, 2,000	P.	0 3 0	.....	
S. C. Chakravarti; the author ...	Dec. 20	Dy. 12mo; 62	4th; 1,000	P.	0 4 0	The Compiler, 80, Beadon Street, Calcutta.	
	1902.						
Bhútnáth Pálit; the author ...	Jan. 15	Dy. 12mo; 51	1st; 1,000	P.	0 4 0	The author, Munsiganj, Dacca.	
	1901.						
Lalit Mohan Ghosh; the C. H. Medical School.	Dec. 30	Dy. 12mo; 21	1st; 1,000	P.	0 1 0	The author, 1, Niyogipukur Lane, Calcutta.	
Prabhát Chandra Datta; the author	Feb. 18	Dy. 12mo; 12	1st; 1,000	P.	.....		
	1902.						
Haridás Banerji; the author ...	Jan. 2	F'cap. 8vo; 153	2nd; 1,000	P.	0 12 0	The author, 45-9, College Street, Calcutta.	
	1901.						
P. C. Mukherji and Sons; the Jaynagar Reading Club.	Oct. 26	Dy. 12mo; 24	1st; 1,000	P.	0 4 0	.....	
G. C. Basu and Co.; Guru Dás Chatterji.	Nov. 20	Dy. 12mo; 108	6th; 1,000	P.	0 3 0	The author, 203, Cornwallis Stre Calcutta.	

1	2	3	4	5
Serial number.	Registration number.	Title, with an English translation of the same when not in that language, the language of the book, and the subject.	Name of author, translator, or editor of the book, or any part of it.	Place of printing and publication.
		BENGALI BOOKS—contd.		
		MISCELLANEOUS.		
155	1781	Ráy Dínabandhu Mitror Granthávalí. The Collection of Works by Ráy Dínabandhu Mitra.	Ráy Dinabandhu Mitra	155-2, Grey Street, Calcutta ... ...
156	1774	Ráy Dínabandhu Mitra Báhádurer Jívaní O Kavitva Samálochaná. Life of Ráy Dínabandu Mitra Báhádur and a Criticism of his poems.	Ráy Vankim Chandra Chatterji Báhádur.	Ditto ... ...
157	1773	Prathamabhág Harináth Granthávalí. The Collection of Works by Harináth. Part I.	Kángál Hari Náth Májumdár ...	Ditto ... ...
158	1895	Plog O Tanniváraner Upáy. "The Plague and How to stamp it out."	Hari Dás Háldár	5, Akrur Datta's Lane; Kálighát; Calcutta.
159	65	Hindu Játibhed, Táhár Phal O Varttamán Avasthá. The Hindu Caste System, its Effects and present Condition.	Yadu Náth Visvás	45-4, Beniyátolá Lane; 27-2, Mirzápur Street; Calcutta.
160	24	Sangít Kusumánjali. A Palmful of Flowers of Songs.	Jitendra Kisor Kakshit	The Bángálá Press, Dacca ... ...
161	125	Játibhed. Distinction of Caste ...	Nagendra Nath Chatterji ...	51-2, Sukea's Street; Sádháran Brahma Samáj; Calcutta.
162	18	Kasyapatantra. The Tantra by Kasyapa ...	Translated by Rám Kumár Dás ...	15, Umes Chandra Datta's Lane; 97, Durgá Charan Mitra's Street; Calcutta.
163	1	Sthánu Srí. Beauty of a Post (?) ...	Guru Charan Chakravartti ...	Bráhmanberiyá, Comilla ... ...
164	42	Svapna Vichár. Discriminating Knowledge of Dreams.	Manisankar Govindaji Sástrí ...	156, Rádhá Bazár; 166-68, Harrison Road; Calcutta.
165	1845	Sangít Sár Sangraha. A Collection of choice Songs. Part III.	Edited by Chárn Chandra Ráy .	38-2, Bhaváni Charan Datta's Street, Calcutta.
166	1715	Tattva Nirnaya. Determination of Truths ...	Khelá Rám Nandí	98, Harrison Road, Calcutta; Bhángámorá, Hugli.
167	6	Sundarí Nátak Vá Prem Kíta. The Drama of the Beautiful Lady or the Worm of Love.	Ditto	Bhátsálá, Burdwan ... ...
168	4	Tapovan. Forest for the Practice of Asceticism.	Kumár Náth Sudhákar	Burdwan ... ...
169	1821	Srishti Vachitrya. Wonders of Creation ...	Ganee Chandra Mukherji ...	122, Amherst Street; 201, Cornwallis Street, Calcutta.
170	1831	Sikshá Tattva. Truths on Education ...	Trailokya Náth Pál	63, Bechu Chatterji's Street, Calcutta...
171	60	Santán Pálaner Niyam Rules for Rearing Children.	Surendra Nath Sen	39, Marjápur Street; 1, Niyogípukur East Lane; Calcutta.
172	172	Uchcha Vanga Vidyálayer Adhyápaná Vidhi "The Senior Vernacular Teacher's Manual."	Nasher Ali Khán Eusofzi ...	25-1, Scott's Lane, Calcutta ...
173	14	Upadesa Ratnávalí Collection of Jewels of Instruction.	Sankar Náth Pandit	62, Sambhu Nath Pandit's Street, Bhawanipur, Calcutta.
174	19	Vangíya Vaisya Báru Jívi Sabhár Káryya Vivaran. The Report of the Vaisya Báru Jívi Association of Bengal.	.....	Jessore ... ...
175	2	Maslá Bibhrát. The Maslá Difficulty ...	Abdul Latif	4, Gorasthán Road, Calcutta; Kákiná, Rangpur.
176	1829	Pauránikí. Relating to the Puránas . .	Káminí Ráy	211, Cornwallis Street, Calcutta ...
177	15	Vividha Sangít Kusum. Flowers of Miscellaneous Songs.	Bhárat Chandra Banikya ...	The Vedavyás Press, Dacca ... ...
178	1743	Visvakosh. The Universal Dictionary. Nos. 253 to 264 (together).	Nagendra Nath Basu	6, Bhím Ghosh's Lane; 14, Telipárá Lane; Calcutta.
179	4	Yuga O Yuga Dharmma. Yuga (era) and the Religion of the Yuga.	Mati Lál Mukherji	Serampore ... ...
180	1826	Phalakar. Fruit Cultivation	Prabodh Chandra De	The Udbodhan Press, Calcutta ...
		Educational—		
181	1870	Nimna Práimeri Parikshá Dán Pranáli. Rules for the Lower Primary Examination.	Prasanna Kumár Vatavyál ...	25-1, Scotts' Lane, Calcutta ... ...
		POETRY.		
182	1	Nári Suhrid. Friend of Women ...	.....	Khulna ... ...
183	3	Devalá. A Name	Maulví Osmán Ali	4, Kareyá Gorasthán Road. Calcutta; Midnapore.
184	4	Kothá Chali Gele!! Where are you gone!!	Sekh Jamir-ud-din	4, Kureyá Gorasthán Road, Calcutta; Nadia.
185	5	Premer Págal. Mad for Love	Satya Charan Banerji	Burdwan ... ...
186	8	Míthe Kará. Soft and Hard	.....	163, Kálighát Road, Calcutta ...
187	11	Níti Prabhá. Lustre of Morals ...	Isán Chandra Basu	The Arun Press, Bhawanipur, Calcutta
188	1747	Sánti Niketan. House of Peace . .	Hárádhan Ghosh ...	11, Wellesley Street, Calcutta ...
189	23	Kavitá Kumud. Lily of Poetry ...	Anukul Chandra Gupta Káyatírtha	Dacca . ...
190	35	Sokochchhvás. Outburst of Grief ...	Abdul Gani Sufiáni	Do. . .. .
191	1712	Vanga Mangal. The Good of Bengal .	Karunánidán Bhattácháryya ..	98, Harrison Road, Calcutta ..
192	119	Dipálí. Collection of Lamps ..	Pramatha Nath Ráy Chaudhuri ...	5, Sivanáráyan Dás's Lane; 32, Beadon Street; Calcutta.
193	1711	Khichuri. Hodge-Podge	Benoyári Lál Gosvámí	98, Harrison Road; 209, Cornwallis Street; Calcutta.

First Quarter ending 31st March 1902—continued.

6	7	8	9	10	11	12	13
Name or firm of printer and of publisher.	Date of issue from the press or of the publication	Size and number of sheets, leaves, or pages.	Number of edition and number of copies of which the edition consists.	Printed or lithoed.	Price at which the book is sold to the public.	Name and residence of the proprietor of copyright, or any part of it.	Copyright registered or not.
	1901.				Rs A. P.		
P. C. Mukherji; Upendra Nath Mukherji.	Nov. 1	Dy. 8vo; 730	1st; 16,000	P.	10 0 0	Upendra Nath Mukerji, 115-2, Grey Street, Calcutta.	
Ditto ditto ...	„ 1	Dy. 8vo; 29	1st; 10,000	P.	1 0 0	Ditto ditto.	
P. C. Mukherji; Jaladhar Sen ...	Nov. 4	Dy. 8vo; 332	1st; 1,000	P.	4 0 0	.....	
Navín Chandra Basu; the author ...	Dec. 18	Dy. 8vo; 32	1st; 2,100	P.	.....	The author, Kálighát, Calcutta.	
	1902.						
Devendra Nath Nandí; Yogíndra Nath Samádár.	Jan. 1	Dy. 8vo; 30	1st; 1,000	P.	.....	The Publisher, 27-2, Mirzapur Street, Calcutta.	
	1901.						
Madan Mohan Basák; the Students' Library.	Dec. 14	Dy. 12mo; 24	1st; 1,000	P.	0 1 0	.....	
Hari Charan De; Chhátra Samáj	Jan. 22	Dy. 12mo; 24	1st; 1,000	P.	0 1 0	.....	
Sarat Kumár Sen; Sasí Bhúshan Pál	Dec. 25	Dy. 12mo; 183	2nd; 2,000	P.	1 0 0	The Publisher, 97, Sonágáchhi Dáryán Pára, Calcutta.	
Sádhu Charan Chauda	„ 4	Dy. 12mo; 35	1st; 125	P.	1 0 0	The author.	
Nilamani Háldár and Co.; the author.	Jan. 2	F'cap. 8vo; 54	1,000	P.	1 0 0	The author, 166-68, Harrison Road, Calcutta.	
Arunoday Ráy	Dec. 1	S.R. 16mo; 312	1st; 20,000	P.	1 0 0	The Vangavásí Firm, Calcutta.	
Kunja Vihárí De; the author ...	Oct. 30	D.cr. 16mo; 108	1st; 1,000	P	..	The author, Hugli.	
Sekh Navávján Daptarí ...	Feb. 15	Dy. 12mo; 160	1st; 1,000	P.	0 1 0	Sekh Navávján Daptarí, Bhátsálá, Burdwan.	
Sekh Navávján Daptarí; Hájári Lál Bhattácháryya.	Jan. 25	Dy. 12mo; 254	1st; 1,000	P.	0 8 0	The author and publisher, Burdwan.	
Nritya Gopál Chakravartí; Guru Dás Chatterji.	Oct. 28	D.fc. 16mo; 104	1st; 1,000	P.	0 14 0	The author, 23, Amherst Street, Calcutta.	
G. C. Basu and Co.	Nov. 20	Dy 12mo; 48	1st; 1,000	P.	0 4 0	The author, Midnapur.	
Lalit Mohon Ghosh; the author ...	Dec. 30	Dy. 12mo; 24	1st; 1,000	P	0 2 0	The author, 1, Niyogípukur East Lane, Calcutta.	
	1902.						
Sányál and Co.	Jan. 1	D.cr. 16mo; 254	1st; 200	P	.....	The author, Pákullá, Tangail.	
Gorá Chánd Chakravarti; the author.	Feb. 5	Dy 12mo; 108	1st; 1,000	P.	0 2 0	The author, 62, Sambhu Náth Pandit's Street, Bhawanipur, Calcutta.	
Kálí Prasanna Chatterji; Prasanna Gopál Ráy.	„ 12	Dy. 8vo; 40	1st; 1,000	P.	.....	.....	
	1901.						
Reázuddin Ahmed; the author ..	Dec. 24	Dy. 12mo; 24	1st; 1,000	P.	0 2 0	The author, Kákiná, Rangpur	
Kárttik Chandra Datta ...	Jan. 1898	D.fc. 16mo. 60	1st; 1,000	P.	0 10 0	The authoress, Bankura.	
	1901.						
Oyáhed Baksh Sarkár; the author...	Dec. 10	Dy. 12mo; 26	1st; 2,000	P.	0 4 0	.....	
U. C. Basu and Co.; the author ...	Oct. 18	Dy. 4to; 384	1st; 1,000	P.	6 0 0	.....	
	1902.						
Mahendra Náth Banerji ...	Feb. 17	Rl. 16mo; 16	1st; 1,000	P.	0 2 0	Priya Nath Karár, Serampore.	
	1901.						
Svámí Trigunátíta; the author ...	Nov. 12	Dy. 12mo; 180	2nd; 1,000	P.	0 8 0	The author, 28, Beadon Street, Calcutta.	
Sányál and Co.	„ 13	Dy. 12mo; 121	1st; 1,000	P.	0 4 0	The author, Comilla.	
	1901.						
Sítánáth De; Devíprasanna Gupta	Dec. 15	Dy. 8vo; 26	1st; 1,000	P.	0 2 0	The publisher, Senháti, Khulna.	
	1902.						
Mahammad Reáz-ud-din Ahmed; the author.	Jan. 19	D.cr. 16mo; 91	1st; 1,000	P.	0 8 0	The author, the Mahammadan Literary Society, Midnapur.	
Mahammad Reáz-ud-din Ahmed; the author.	Feb. 9	Dy. 12mo; 9	1st; 1,000	P.	0 0 6	The author, Gándádov, Nadia	
Navábján Daptarí; Yogendra Chandra Yas.	„ 10	Dy. 12mo; 30	1st; 1,000	P.	0 2 0	The author and publisher, Sátgechiyá, Burdwan.	
Níradbaran Dás ...	„ 1	Dy. 12mo; 24	5th; 1,000	P.	0 1 0	...	
Jaygopál Ghoshál .. .	...	Dy. 12mo; 56	Nil	P.	0 2 0	The author, 55, Upper Chitpur Road, Calcutta	
	1901.						
M. Mánná .. .	Nov. 14	Dy. 8vo; 53	1st; 1,000	P.	0 8 0	The author, 27, Jánbázár Street, Calcutta.	
Madan Mohan Basák; the author	Dec. 17	Dy. 12mo; 59	1st; 1,000	P.	0 4 0	.	
Munsí Ekábbar; the author .	„ 31	Dy. 1 mo; 14	1st; 300	P.	.....	....	
Kunja Vihárí De ..	Oct. 16	D.cr. 16mo; 32	1st; 500	P.	0 2 0	The author, Sántipur.	
Púrna Chandra Dás; Anukul Chandra Basu.	Dec. 29	Dy. 8vo; 170	1st; 500	P.	1 8 0	The author, 32, Beadon Street, Calcutta.	
Kunja Vihárí De; the Majumdár Library.	Oct. 18	D.cr. 16mo; 128	1st; 500	P.	0 12 0	The author, Sántipur.	

1	2	3	4	5
Serial number.	Registration number.	Title, with an English translation of the same when not in that language, the language of the book, and the subject.	Name of author, translator, or editor of the book, or any part of it.	Place of printing and publication.
		BENGALI BOOKS—contd.		
		POETRY—*concld.*		
194	1783	Manjír. An Anklet	Bhujangadhar Ráy Chaudhurí ...	8, College Square; 64, College Street; Calcutta.
195	1863	Padmá. A Name	Ditto ditto ...	5, Sivanáráyan Dás's lane; 35-2, Beadon Street; Calcutta.
196	1925	Príti Sammilan. A Friendly gathering ...	Kholárám Nandí	4, William's Lane, Calcutta; Madan Mohanpur Merchant Office.
		Educational—		
197	1	Kavitá Ratnávalí. Collection of Jewels of Poems. (T.)	Kailás Chandra Ghosh	The British India Printing Works, Howrah.
198	1	Mánas Kusum. Flowers of the Mind ...	Hem Kumár Chaudhurí	Dacca ... ...
199	64	Ditto ditto	Ditto	Do. ... ...
200	71	Kavitá Kusum. Flowers of Verse ...	Bipin Vihárí Chakravartí ...	The Isán Press, Dacca ... ...
201	6	Kavitá Sopán. Stepping-stone to Poetry...	Mahendra Chandra Som	46, Bechu Chatterjí's Street; 30, Cornwallis Street; Calcutta.
202	11	Kavitá Sár. Essence of Poetry... ...	Ananda Chandra Mittra	30-5, Madan Mitra's Lane; 201, Cornwallis Street; Calcutta.
203	4	Pritihár. Garland of Love	Hem Chandra Ghosh	Mymensingh ... ...
204	75	Bálya Kavitá. Poems of Childhood ...	Jnánendra Mohan Sen Gupta ...	5, Nílmádhav Sen's Lane, Calcutta; Goálpárá, Assam.
205	104	Komal Kavitá. Soft Verses	Kálíprasanna Ghosh	Girís Press, Dacca ... ...
206	165	Kavitá Manjarí. Blossoms of Poetry. Part I.	Yogendra Náth Sen	17, Madan Mitra's Lane, Calcutta ...
207	171	Kavitá Prasanga. Poetic Discourse ...	Yogendra Náth Basu	211, Cornwallis Street; 64, College Street; Calcutta.
208	1888	Bhaktir Upahár. Gift of Devotion ...	Nílmani Nyáyalankár	The Metcalfe Press, 3-4, Gaur Mohan Mukherji's Street, Calcutta.
		RELIGION.		
209	1770	Purána Sangraha Mahábhárata. A Collection of Puránas. The Mahábhárata. Part. XV. (T.) (H).	Translated by Kálí Prasanna Sinha...	147, Báránasí Ghosh's Street, Calcutta
210	1832	Ditto ditto. Part XVI (T.) (H.)	Ditto ditto ...	Ditto ditto ...
211	1787	Ditto ditto. Part 11 (T.) (H.)	Ditto ditto ...	4, Gulu Ostágar's Lane, Calcutta ...
212	1787	Ditto ditto. Part 12 (T.) (H.)	Ditto ditto ...	Ditto ditto ...
213	1738	Ditto ditto. Part 13 (T.) (H.)	Ditto ditto ...	Ditto ditto ...
214	1880	Ditto ditto. Part 14 (T.) (H.)	Ditto ditto ...	Ditto ditto ...
215	1879	Ditto ditto. Part 15 (T.) (H.)	Ditto ditto ...	Ditto ditto ...
216	128	Ditto ditto. Part 16 (T.) (H.)	Ditto ditto ...	Ditto ditto ...
217	128	Ditto ditto. Part 17 (T.) (H.)	Ditto ditto ...	Ditto ditto ...
218	129	Ditto ditto. Part 18 (T.) (H.)	Ditto ditto ...	Ditto ditto ...
219	129	Ditto ditto. Part 19 (H.) ...	Ditto ditto ...	Ditto ditto ...
220	1736	Kási Khanda. The B[illegible] on Benares. No. 13 (H).	Translated by Kálí Prasanna Vidyáratna.	Ditto ditto ...
221	1736	Ditto ditto. No. 14 (H).	Ditto ditto ...	Ditto ditto ...
222	1736	Ditto ditto. [illegible] 15 (H).	Ditto ditto ...	Ditto ditto ...
223	159	Srimad Bhágavatasár V[illegible]ákur Charit. [illegible]se of the Srimad Bhagavat or the life of Sri Krishna. (H).	Kedáreswar Tarkaratna Bhattácháryya.	330, Upper Chitpur Road; 17, Hara Lál Dás's Lane; Calcutta.
224	1844	Devi Bhágavata. Lays in Honour of the Goddess Durgá (T.) (H).	Prasánnan Tarkaratna	38-2, Bhaváni Charan Datta's Street, Calcutta.
225	1708	Satya Náráyan Vrata Kathá. The Story of the Vow in honour of the God Satyanárayan. (T.) (H).	Jogendra Nath Kávyavinod ...	25, Pataldángá Street, Calcutta ...
226	1710	Kásivilás Granthávalí. A Collection of Books by Kásivilás. (H).	Kásivilás Banerji	221, Cornwallis Street, Calcutta; Bankura
227	1758	Sankírtan. The Chanting (of the names of Rádhá and Krishna). (H).	Srí Prabhu Jagabandhu	1, Charakdángá Street; Rám Bágán. Krishna Mandir; Calcutta.
228	56	Atmatattva O Iswar Bhajan. Nature of the Soul and the Worship of God. (H).	Amvíká Charan Chakravarttí ...	39, Mirjápur Street, Calcutta; Salemánpur, Jessore.
229	1927	Prárthaná. Prayer. (H).	Narottam Thákur	4, William's Lane, Calcutta; Mainá, Sylhet.
230	8	Arjuna Gítá. Verses addressed to Arjuna (H.)	Madhusúdan Jáná	Contai ... ...
231	11	Maharshi Vedavyáser Janma Vivaran. An Account of the Birth of the Sage Vedavyása. (H).	Ditto	Do. ... ...
232	15	Gíta. Song (H).	Jádav Chandra Sarma Bísi ...	Tamoghna Press, Bosilia ... ...
233	1732	Tattva Prasún. Flowers of Truth (H.) ...	Krishna Charan Pál Tattvanidhí ...	79-3-2-3, Cornwallis Street; The Haribhakti Pradáyiní Sabhá, Syámbázár; Calcutta.
234	2	Sangít Saparyyá. Worship by means of Songs (H).	Nrisinha Dás Tantrarátna Bhattacháryya.	Kumarkhalí; Mírtalá, Purbasthali, Burdwan.
235	8	Karttá O Man. The Doer and the Mind. Part I. (H).	Siva Chandra Vídyárnava Bhattácharyya.	Kumarkhalí ... ...
236	2	Tattvakaumudí. Moonlight of Truth. Part I (H).	Vaikuntha Kumár De	Comilla ... ...
237	39	Kalí Kalusha Násan Asi. Sword of the Destroyer of the Sins of the Kali Era. (H).	Nivárun Chandra Pál Sarman ...	Dacca ... ...
238	7	Iswar Tattva. Truths about God. Part I (H).	Vanka Vihárí Gosvámí	Tangail ... ...

First Quarter ending 31st March 1902—continued.

6	7	8	9	10	11	12	13
Name or firm of printer and of publisher.	Date of issue from the press or of the publication.	Size and number of sheets, leaves, or pages.	Number of edition and number of copies of which the edition consists.	Printed or litho'd.	Price at which the book is sold to the public.	Name and residence of the proprietor of copyright, or any part of it.	Copyright registered or not.
	1901.				Rs. A. P.		
Tulasí Charan Dás; the City Book Society.	Oct. 26	Cr. 8vo; 219	1st; 700	P.	1 4 0	The author, 64, College Street, Calcutta.	
Ditto ditto ...	Dec. 24	Dy. 8vo; 171	2nd; 500	P.	1 8 0	The author, 32-2, Beadon Street, Calcutta.	
	1897.						
Amrita Lál Ghosh; the author ...	June 14	D.cr. 16mo; 58	1st; 1,000	P.	...	The author.	
	1902.						
Pramatha Náth Mukherji ...	Feb. 5	Dy. 12mo; 95	1st; 1,000	P.	0 8 0	The author, Ráyna, Burdwan.	
	1901.						
Revatí Mohan Dás; Hari Rám Dhar.	Dec. 8	Dy. 12mo; 50	4th; 2,000	P.	0 4 0	.....	
	1092.						
Ditto ditto ...	Feb. 12	Dy. 12mo; 50	1st; 2,000	P.	0 4 0	.....	
Mathurá Náth De; Dína Nath Modak.	„ 25	Dy. 12mo; 56	1st; 500	P.	0 4 0	.....	
R. Datta; Yadu Náth Mukherji ...	Jan. 2	D.cr. 16mo; 40	21st; 6,000	P.	0 1 6	The author, Dacca.	
	1901						
Bhút Náth Pálit; Gurudás Chatterji.	Dec. 21	D.cr. 16mo; 80	13th; 1,000	P.	0 4 0	The author, 23, Rájá Nava Krishna's Street, Calcutta.	
	1902.						
Amiruddin Ahmed	Feb. 11	Dy. 12mo; 42	4th; 1,000	P.	0 8 0	.....	
	1901.						
Asutosh Ghosh	Dec. 29	Cr. 8vo; 32	1st; 250	P.	0 2 0	The author, Goálpárá, Assam.	
	1902.						
Harihar Nandí; Hara Kumár Basu	Mar. 17	Dy. 12mo; 80	16th; 2,000	P.	0 2 6	.....	
Ramaní Mohan De; the author ...	Jan. 1	D.cr. 16mo; 44	3rd; 1,000	P.	0 2 0	The author, 34, Hiderám Banerji's Lane, Calcutta.	
Kárttikchandra Datta; the City Book Society.	„ 9	D.fc. 16mo; 126	5th; 3,000	P.	0 7 0	The author, Deoghar, Baidyanáth.	
	1901.						
R. Pyne	Dec. 7	Dy. 12mo; 49	2nd; 1,000	P.	0 4 0	The author, 26, Táltalá East Lane, Calcutta.	
	1901.						
Jagat Bandhu Dás Ghosh; the Fine Art Printing Syndicate.	Nov. 27	D.cr. 4to; 153	2nd; 1,000	P.	0 12 0	Vijay Chandra Sinha, 147, Báránasí Ghosh's Street, Calcutta.	
Ditto ditto ...	Dec. 4	D.cr. 4to; 160	2nd; 1,000	P.	0 12 0	Ditto. Ditto.	
Chuni Lál Banerjí; H. D. Mánná and Co.	Oct. 15	Rl. 8vo; 80	New; 2,000	P.	0 4 0	.....	
Ditto ditto ...	„ 15	Rl. 8vo; 80	New; 2,000	P.	0 4 0	.....	
Ditto ditto ...	Nov. 12	Rl. 8vo; 80	New; 2,000	P.	0 4 0	.....	
Ditto ditto ...	„ 30	Rl. 8vo; 80	New; 2,000	P.	0 4 0	H. D. Mánná and Co., 4, Gulu Ostágar's Lane, Calcutta.	
Ditto ditto ...	Dec. 15	Rl. 8vo; 80	New; 2,000	P.	0 4 0		
	1902.						
Ditto ditto ...	Jan. 24	Rl. 8vo; 80	New; 2,000	P.	0 4 0	.....	
Ditto ditto ...	„ 24	Rl. 8vo; 80	New; 2,000	P.	0 4 0	.....	
Ditto ditto ...	„ 24	Rl. 8vo; 80	New; 2,000	P.	0 4 0	.....	
Ditto ditto ...	„ 24	Rl. 8vo; 80	New; 2,000	P.	0 4 0	.....	
Ditto ditto ...	Oct. 16	Dy .8vo; 80	New; 1,000	P.	0 4 0	.....	
Ditto ditto ...	„ 16	Dy. 12mo; 80	New; 1,000	P.	0 4 0	.....	
Ditto ditto ...	„ 16	Dy. 12mo; 80	New; 1,000	P.	0 4 0	.....	
Nílamani Dhar; the author ...	Jan. 16	Dy. 12mo; 260	1st; 2,000	P.	1 4 0	.....	
	1901.						
Arunoday Ráy	Dec. 1	Dy. 8vo; 775	1st; 20,000	P.	2 8 0	The Vangavásí Firm, Calcutta.	
Káli Pada Chakravartí; Káli Kamal Nyáyaratna.	Nov. 4	Dy. 12mo; 24	1st; 1,000	P.	0 2 0	Ditto ditto.	
Prahlád Chandra Dás: the author	Oct. 25	Rl. 8vo; 105	1st; 2,000	P.	1 4 0	The author, Kálikápur, Bankura.	
The Calcutta Press Company; the author.	Nov. 15	D.cr. 16mo; 108	1st; 1,000	P.	0 4 0	Manindra Nath Banerjí, 1, Charakdángá Street, Calcutta.	
	1902.						
Lalit Mohan Ghosh; the author ...	Jan. 8	Dy 12mo; 39	1st; 1,000	P.	0 8 0	The author, Soleménpur, Kotchándpur, Jessore	
	1395						
Amrita Lál Ghosh; Aniruddha Charan Chaudhurí and Yajneswar Charan Chaudhurí.	Mar. 13	Dy. 12mo; 38	1st; 600	P.	0 1 6	The publisher, Mainá, Sylhet.	
	1901						
Madhusúdan Jáná	Nov. 27	Dy. 12mo; 67	2nd; 1,000	P.	0 2 0	Madhusúdan Jáná, Contai.	
	1902.						
Ditto	Feb. 4	Dy. 12mo; 11	1st; 500	P.	0 0 6	Ditto.	
Sakiruddin Sarkár	Jan. 28	Dy. 8vo; 8	1st; 1,000	P.	.....	The author, Goári, Rájsháhi.	
	1901.						
Srímanta Ráy Chaudhurí; Amviká Charan Dás.	Sept. 4	Dy. 8vo; 26	1st; 500	P.	0 2 0	The author, 110, Cornwallis Street, Calcutta.	
Kunja Lál Dás; the author ...	...	Dy. 12mo; 41	2nd; 500	P.	.....	The author, Mírtalá, Purbasthalí, Burdwan.	
Kunja Lál Dás; Dánavári Gangulí	...	Dy. 8vo; 12	1st; 2,000	P.	0 0 6	The author, Kumarkhali, Nadia.	
Gopál Chandra Dás ...	Dec. 30	Dy. 12mo; 36	1st; 500	P.	0 4 0	The author, Krishnapur, Tipara.	
	1902.						
Krishna Dás Basák; the author ...	Jan. 15	Dy. 12mo; 8	1st; 1,000	P.	1 0 0 Yearly.	.....	
Sádhu Sarkár	Dec. 18	Dy. vo; 18	1st; 500	P.	0 2 0	The author, Deuli, Tangail.	

1	2	3	4	5
Serial number.	Registration number.	Title, with an English translation of the same when not in that language, the language of the book, and the subject.	Name of author, translator, or editor of the book, or any part of it.	Place of printing and publication.
		BENGALI BOOKS—contd.		
		RELIGION—*concld.*		
239	26	Bauddha Dharma. Buddhism. (Bud.) ...	Satyendra Náth Tagore, C.S. ...	48, Grey Street, Calcutta ... ...
240	1893	Atyáramí Kesav Chandrer Asram Dharma. Asram Duties (duties as a householder) of Kesav Chandra, who outgrew all Asramas (stages of life). (B).	Rev. G. G. Ráy	3, Ramánáth Majumdár's Street, Calcutta.
241	1617	Brahma Gítá. Exposition of true Religion by God. Parts I and II (together). (B).	Chiranjív Sarmá	2, Goabágán Street, Calcutta ...
242	1921	Dainik Sástra Páth. Daily Readings of the Gospel. For November 1901. (C).	Miss Daw	41, Lower Circular Road; 31, Free School Street; Calcutta.
243	1806	Ditto ditto. (C)	Ditto	Ditto ditto ...
244	183	Khanjaké Sústha Karé. Curing the Lame. (C).	Rev. C. E. Wilson	41, Lower Circular Road, Calcutta ...
245	185	Angíkrita Sakti Dán. Grant of Promised Strength. (C).	Ditto	Ditto ditto ...
246	184	Adi Krishtiya Mandalí. First Christian Congregation. (C).	Ditto	Ditto ditto ...
247	182	Sakti Dáner Angíkár. Promise of a Grant of Power. (C).	Ditto	Ditto ditto ...
248	1793	Josheph O Táhár Bhrátrigan. Joseph and his Brothers. (C).	Rev. A. Jewson...	Ditto ditto ...
249	181	Yisur Nám Khonráke Sustha kare. The Name of Jesus cures the Lame. (C).	Ditto	Ditto ditto ...
250	180	A'dim Khríshtíya Mandalí. "Primitive Christian Congregation." (C).	Ditto	Ditto ditto ...
251	179	Pratijná Anusáre Sakti Deoyá. Grant of Power according to Promise. (C).	Ditto	Ditto ditto ...
252	178	Sakti Dibár Angíkár. Promise of a Grant of Power. (C).	Ditto	Ditto ditto ...
253	1794	Yosheph Gauravánvita. Joseph Glorified. (C).	Ditto	Ditto ditto ...
254	1795	Yosheph Vikríta. "Joseph Sold" (C) ...	Ditto	Ditto ditto ...
255	1796	Yosheph Kárágáre. "Joseph in Prison" (C)	Ditto	Ditto ditto ...
256	1798	Yoshepher Unnati. "Prosperity of Joseph." (C).	Rev. M. N. Náth	Ditto ditto ...
257	1797	Yosheph O Tánhár Bhrátrigan. "Joseph and his Brothers." (C).	Ditto	Ditto ditto ...
258	1799	Yosheph Kárágáre. "Joseph in Prison." (C).	Ditto	Ditto ditto ...
259	1800	Yosheph Vikríta Haiyá Misare Yán. Joseph was Sold and brought to Egypt. (C).	Ditto	Ditto ditto ...
260	193	Nútan Batsar. "New Year" (C) ...	Ditto	41, Lower Circular Road; 23, Chowringhí Road; Calcutta.
261	194	Karma Phal. "Sowing and Reaping." (C)	Ditto	Ditto ditto ...
262	1816	Yisu Khríshter Pápavihínatá. "The Sinlessness of Jesus Christ." (C).	Rev. W. R. James	Ditto ditto ...
263	1805	Yátrá Pustak O Lebiya Pustak Satik. "Exodus and Leveticus, annotated in Bengali." (T.) (C).	G. H. Rouse	Ditto ditto ...
264	1912	Kirupe Sástra Páth Karite Hay. "How to read the Bible." (C).	Ditto	Ditto ditto ...
265	188	Pratimár Biruddhe Sástriya Ukti. "The Testimony of the Scriptures against Idolatry." (C).	Rev. A. W. Young	Ditto ditto ...
266	1911	Vaner Agun. "The Forest Fire" (C) ...	Ditto	Ditto ditto ...
267	1910	Yisu Khríster Janmotsav. "The Birthday of Jesus Christ." (C).	Ditto	Ditto ditto ...
268	196	Dharmopadesa Saha Dainik Panjiká. Daily Almanac with Religious Instruction. (C).	Rev. J. Yakle and Rev. A. W. Young	Ditto ditto ...
269	1817	Durgotsav. "The worship of Durgá." (C)	H. C. Ráhá	Ditto ditto ...
270	140	Boná O Káta. "Sowing and Reaping." (C)	Ditto	46; 140; Dharmmatalá Street, Calcutta
271	1819	Dáktár Mártin Luthár Likhita Chhota Kátikisma Athavá Dharmopadesa Málá. "Dr. Martin Luther's Catechism." (C).	Dr. A. Nottrott	41, Lower Circular Road, Calcutta; Ranchi.
272	139	Purátan Niyamer Itihás. The History of the old Testament. (C).	.....	46, Dharmmatalá Street; 23, Chowringhi Road; Calcutta.
273	176	Sárvatrik Sástra Páth Samiti. Universal Gospel Reading Association. For 1902. (C).	Rev. J. W. Gilbert	41, Lower Circular Road, Calcutta ...
274	84	Adarsa Mandalí. Model Congregation. (C)	A. D. Khán	154, Bow Bazar Street, Calcutta ...
275	14	Paran O Kátikijam. Litany and Catechism. (C).	Pádri N. A. Lábu Sáhev	Dacca ... ...
		SCIENCE (MATHEMATICAL).		
		Educational—		
276	8	Subhankarí Kryyá. Subhankar's Arithmetical Formulæ.	Mutilál Chakravartí	The Genderiyá Press, Dacca ... ...
277	17	Nútan Dhárápát. New Arithmetical Tables	Kunja Vihárí Náth	The Vedavyás Press, Dacca ... ...
278	28	Saral Ganít. Easy Arithmetic	Matilál Chakravartí	46, Bechu Chatterji's Street, Calcutta; Mymensing.
279	33	Mánasik Gananá. Mental Calculation ...	Dína Náth Sen	The Genderiyá Press, Dacca ... ...
280	38	Ditto ditto ...	Ditto	Ditto ... ...

First Quarter ending 31st March 1902—continued.

6	7	8	9	10	11	12	13
Name or firm of printer and of publisher.	Date of issue from the press or of the publication.	Size and number of sheets, leaves, or pages.	Number of edition and number of copies of which the edition consists.	Printed or litho'd.	Price at which the book is sold to the public.	Name and residence of the proprietor of copyright, or any part of it.	Copyright registered or not.
	1901.				Rs. A. P.		
Rákhál Chandra Ghosh; Majumdár and Co.	Dec. 27	Dy. 12mo; 240	1st; 900	P.	1 8 0	The author, 19, Store Road, Báliganj, Calcutta.	
K. P. Náth	„ 19	Dy. 12mo; 30	1st; 300	P.	0 2 0	Brahmo Mission Office, 3, Ramánáth Majumdar's Street, Calcutta.	
Kunja Vihárí Dás	Oct. 6	Dy. 8vo; 152	1st; 500	P.	1 0 0	Trállokya Náth Sányál.	
Rev. C. H. Harvey; the Young Women's Christian Association.	„ 19	Dy. 8vo; 4	1st; 300	P.	.....	.....	
Ditto ditto ...	Nov. 22	Dy. 8vo; 4	1st; 300		.....	.....	
Rev. C. H. Harvey; the B. S. S. Union.	Dec. 24	Rl. 8vo; 2	1st; 2,700	P.	20 copies per anna.	.....	
Ditto ditto ...	„ 24	Rl. 8vo; 2	1st; 2,700	P.	Ditto	.....	
Ditto ditto ...	„ 24	Rl. 8vo; 2	1st; 2,700	P.	Ditto	.....	
Ditto ditto ...	„ 12	Rl. 8vo; 2	1st; 2,700	P.	Ditto	.....	
Ditto ditto ...	Sept. 24	Dy. 16mo; 2	1st; 4,500	P.	100 copies per anna.	.....	
Ditto ditto ...	Dec. 24	Dy. 16mo; 2	1st; 5,500	P.	Ditto	.....	
Ditto ditto ...	„ 24	Dy. 16mo.; 2	1st; 5,500	P.	Ditto	.....	
Ditto ditto ...	„ 24	Dy. 16mo.; 2	1st; 5,500	P.	Ditto	.....	
Ditto ditto ...	„ 24	Dy. 16mo.; 2	1st	P.	Ditto	.....	
Ditto ditto ...	Sept. 24	Dy. 16mo.; 2	1st; 4,500	P.	Ditto	.....	
Ditto ditto ...	„ 24	Dy. 16mo.; 2	1st; 450	P.	Ditto	.....	
Ditto ditto ...	„ 24	Dy. 16mo.; 2	1st; 4,500	P.	Ditto	.....	
Ditto ditto ...	„ 21	Rl. 8vo.; 2	1st; 2,500	P.	20 copies per anna.	.....	
Ditto ditto ...	„ 21	Rl. 8vo.; 2	1st; 2,500	P.	Ditto	.....	
Ditto ditto ...	„ 21	Rl. 8vo.; 2	1st; 2,500	P.	Ditto	.....	
Ditto ditto ...	„ 21	Rl. 8vo.; 2	1st; 2,500	P.	Ditto	.....	
Rev. C. H. Harvey; the C. T. and B. Society.	Dec. 24	Cr. 8vo.; 4	1st; 15,000	P.	.....	.....	
Ditto ditto ...	„ 29	Cr. 8vo.; 4	1st; 15,000	P.	.....	.....	
Ditto ditto ...	Oct. 16	Cr. 8vo.; 4	1st; 10,000	P.	.....	.....	
Ditto ditto ...	„ 15	S.rl. 8vo.; 130	1st; 1,000	P.	0 4 0	.....	
Ditto ditto ...	Dec. 5	Dy. 8vo.; 2	1st; 3,000	P.	.....	.....	
Ditto ditto ...	„ 27	Cr. 8vo.; 22	1st; 5,000	P.	0 0 3	.....	
Ditto ditto ...	Nov. 23	Cr. 8vo.; 4	1st; 15,000	P.	.....	.....	
Ditto ditto ...	„ 28	Cr. 8vo.; 4	1st; 15,000	P.	.....	.....	
Ditto ditto ...	Dec. 26	.....	1st; 10,000	P.	0 0 6	.....	
Ditto ditto ...	Oct. 18	Cr. 8vo.; 4	1st; 10,000	P.	.....	.....	
Joseph Culshaw; the Women's Union Mission of America.	Dec. 27	D.cr. 16mo; 104	1st; 500	P.	0 2 0	The Women's Union Mission of America, 140, Dharmmatalá Street, Calcutta.	
Rev. C. H. Harvey; the G. E. L. Mission.	Oct. 18	Dy. 12 mo; 34	1st; 3,000	P.	.....	.....	
	1902.						
Rev. Joseph Culshaw; the Christian Tract and Book Society.	Jan. 23	D.cr. 16mo; 28	1st; 1,000	P.	0 0 3	The Christian Tract and Book Society, 23, Chowringhee Road, Calcutta.	
	1901.						
Rev. C. H. Harvey; the Bengal C. E. Union.	Dec. 26	F'cap 8vo.; 13	1st; 500	P.	.....	.....	
	1902.						
G. N. Dás; the Church of God Publishing Company.	Jan. 4	Dy. 36mo; 211	1st; 500	P.	.....	.....	
	1901.						
Oyáhedbuks Sarkár; the author ...	Dec. 10	Dy. 12 mo; 24	1st; 200	P.	.....	.....	
Bhánu Chandra Dás; Atul Chandra Chakravartí.	Dec. 16	Dy. 12mo; 152	5th; 1,000	P.	0 6 0	.....	
Oyáhed Baks; Kálí Prasanna Náth	„ 15	Dy. 12mo; 72	5th; 2,000	P.	0 2 0	.....	
R. Datta; Rámsundar Datta ...	„ 4	D.cr. 16mo; 160	3rd; 3,000	P.	0 6 0	The author, Mymensing.	
	1902.						
Bhánu Chandra Dás; Priya Náth Sen.	Jan. 10	Dy. 12mo; 60	47th; 4,000	P.	0 3 0	.....	
Ditto ditto ...	„ 30	Dy. 12mo; 60	48th; 3,000	P.	0 3 0	.....	

1	2	3	4	5
Serial number.	Registration number.	Title, with an English translation of the same when not in that language, the language of the book, and the subject.	Name of author, translator, or editor of the book, or any part of it.	Place of printing and publication.
		BENGALI BOOKS—concld.		
		SCIENCE (MATHEMATICAL)—*concld.*		
281	44	Anka Sikshá. Instruction in Arithmetic	Mathurá Náth Guha	6, College Square; 64, College Street; Calcutta.
282	58	Nimna Pátiganit. Lower Arithmetic ...	Gauráṅgahari Dhar	The Asutosh Press, Dacca ... ...
283	98	Ditto ditto ...	Ditto	Ditto ... ...
284	74	Sankshipta Pátiganit. A Short Arithmetic	Srínáth Bhattácháryya	25-1, Scott's Lane, Calcutta ... ...
285	78	Sisu Subhankarí. Subhankar's System of Arithmetic for Children.	Báburám Pál	115, Muktárám Babu's Street, Calcutta; Chandrakoná, Jayantipur.
286	83	Subhankarí Aryyá. Subhankar's Arithmetical Formulæ.	Trilochan Chakravartí	309, Upper Chitpur Road, Calcutta ...
287	102	Práthamik Patíganit. The Lower Primary Arithmetic.	Kumudiní Kánta Banerji ...	46, Bechu Chatterji's Street, Calcutta; London.
288	167	Saral Jyámiti. Easy Geometry. Book I	Nivárun Chandra Bhattácháryya and Rájendra Lál Banerji.	17, Madan Mitra's Lane, Calcutta ...
289	170	Pátíganit. Arithmetic. Part II ...	Tárini Kánta Majumdár	211, Cornwallis Street, Calcutta ...
290	1739	Pátíganit O Mánasánka Samvalita Subhankarí. Subhankar's system of Arithmetic together with the Ordinary and Mental Arithmetic.	P. Ghosh	32-1, Malangá Lane, Calcutta ...
291	1876	Ganit Praves Vá Apúrva Dhárápát. Introduction to Arithmetic or Wonderful Arithmetical Tables.	Rasik Lál Bhattácháryya	45, Beniátolá Lane; 65, College Street; Calcutta.
292	1869	Mánasánka O Bázár Hisáv. Mental Arithmetic and Bazár Accounts.	Ráhát Ali Khán	25-1, Scott's Lane, Calcutta; Dacca ...
		SCIENCE (NATURAL AND OTHER).		
		Educational—		
293	8	Bhúvidyá Vishayak Páth Arthát Prákritik Bhúgol. "Introduction to Physical Geography."	Rái Radhiká Prasanna Mukherji Báhádur.	46, Bechu Chatterji's Street; 30, Cornwallis Street; Calcutta.
294	1852	Svásthyarakshá. Preservation of Health...	Ditto ditto ...	Ditto ditto ...
295	21	Svásthyarakshár Pravesikár Prasnottar. A Catechism of Svásthyarakshá Pravesiká.	Jánakínáth Náth	Dacca ... ...
296	97	Saral Sarír Pálaner Prasnottar. A Catechism of Saral Sarír Pálan.	Kunja Vihárí Náth	Ditto ... ...
		ENGLISH BOOKS.		
		BIOGRAPHY.		
1	49	Memoirs of Mahárájá Nubkissen Báhádur ...	N. N. Ghosh	47, Bentinck Street; 106-1, Grey Street; Calcutta.
2	1764	Srí Krishna; His Life and Teachings ...	Dhírendra Náth Pál	98, Harrison Road; 26-3, Scott's Lane; Calcutta.
3	7	Vallálacharita in Sanskrit by Ánanda Bhatta. (T).	Mahámahopádhyáy Haraprasád Sástrí.	46, Bechu Chatterji's Street, Calcutta...
		DRAMA.		
4	1766	Abhijnán Sakuntalam. Sakuntalá with the Token of a Ring. (T).	Kálikes Banerji	98, Harrison Road, Calcutta; Nadia ...
5	41	Hindu Dramatic Works translated from the original Sanskrit into English. (T).	H. H. Wilson	40, Nayánchánd Datta's Street, Calcutta
		FICTION.		
6	1902	The Bág O Báhár. Garden and Beauty. (T.)	Lieutenant-Colonel W. Quentin ...	41, Lower Circular Road; 17, Elysium Row; Calcutta.
		HISTORY (INCLUDING GEOGRAPHY).		
7	14	Gauda under the Hindus	Akshay Kumár Maitra	The Samiti Press, Ghorámárá, Rajshahi
8	7	A History of the Intellectual Progress of Modern India.	P. Mitra	The New Town Press, Bhawanipur ...
		Educational—		
9	69	A History of India for junior classes ...	H. A. Stark	25-1, Scott's Lane; 103-3, College Street; Calcutta.
10	85	A Catechism of History of Greece and Rome. For F. A. candidates.	Kailáschandra Mánná and Dovendranáth Ráy.	10, Haladhar Barddhan's Lane; 58, Wellington Street; Calcutta.
11	9	Dey's Model Questions and Answers on Geography.	Prasád Chandra De	The Genderiyá Press, Dacca ...
12	103	An Elementary Geographical Reader. For Standards III and IV.	Isán Chandra Ghosh	46, Bechu Chatterji's Street, Calcutta...
		LANGUAGE.		
		Educational—		
13	1778	Helps to the Study of English	Kunja Vihárí Basu	29, Charakdángá Street ; 40, Sukea's Street; Calcutta.
14	100	Moral Readings	G. Datta	17, Madan Mitra's Lane; 67, College Street; Calcutta.
15	76	A First English Reader	D. N. Basu	63, Bechu Chatterji's Street; 30, Cornwallis Street; Calcutta.
16	4	Victoria Lessons. Part I	Vishnu Charan Bhattácháryya and Mahendra Chandra Som.	46, Bechu Chatterjí's Street; 25, Cornwallis Street; Calcutta.
17	5	Murray's Indianized English Spelling-Book. With reading lessons. Part I.	.....	46, Bechu Chatterjí's Street, Calcutta; Noákháli.
18	94	Notes on the Merchant of Venice ...	D. B. Set, M.A.	108, Báránasí Ghosh's Street; 54, College Street; Calcutta.

First Quarter ending 31st March 1902—continued.

6	7	8	9	10	11	12	13
Name or firm of printer and of publisher.	Date of issue from the press or of the publication.	Size and number of sheets, leaves, or pages.	Number of edition and number of copies of which the edition consists.	Printed or Litho'd.	Price at which the book is sold to the public.	Name and residence of the proprietor of copyright, or any part of it.	Copyright registered or not.
	1901.						
Nivárun Chandra Ghosh; the City Book Society.	Dec. 20 1902.	Dy. 8vo; 132	1st; 1,000	P.	0 3 0	The author.	
Revatímohan Dás; Harirám Dhar	Jan. 25	Dy. 12mo; 100	1st; 1,000	P.	0 4 0	.....	
Ditto ditto ...	Feb. 21	Dy. 12mo; 108	2nd; 1,000	P.	0 4 0	.....	
Sányál and Co.	Jan. 1	D.cr. 16mo; 112	1st; 100	P.	0 4 0	The author.	
Sasíbhúshan Ghosh; the author ...	,, 15 1901.	Dy. 12mo; 50	1st; 1,000	P.	0 4 0	Ditto.	
Chaturbhuj Bhattácháryya; the author.	Dec. 15 1902.	Dy. 12mo; 46	1st; 2,000	P.	0 1 6	.....	
R. Datta; Messrs. Macmillan and Co.	Jan. 20 1901.	D.cr. 16mo; 144	1st; 100	P.	.....	The publishers, London.	
Ramanímohan De; Nivéran Chandra Bhattacháryya.	Nov. 23 1902.	D.cr. 16mo; 174	1st; 1,000	P.	0 4 0	Nivárun Chandra Bhattácháryya, Dinháta, Cooch Behar.	
Kárttik Chandra Datta... ...	Jan. 5 1901.	Dy. 12mo; 216	2nd; 1,000	P.	0 8 0	The author, Suri, Birbhum.	
S. P. Ghosh	Oct. 16	Dy. 16mo; 258	26th; 5,000	P.	0 8 0	Mrs. P. Ghosh, 2, MacLeod Street, Calcutta.	
Sasíbhúshan Chakravartí; Surendra Náth Hájrá.	Nov. 25	Dy. 12mo; 63	1st; 1,000	P.	0 3 0	The author, Paráj, Burdwan.	
Sányál and Co.; the Dacca Library	Dec. 11	Dy. 12mo; 64	3rd; 2,000	P.	0 1 6	The author.	
	1902.						
R. Datta; Yadunáth Mukherji ...	Jan. 2 1901.	Dy. 12mo; 144	44th; 3,000	P.	0 6 0	The author, Calcutta.	
Ditto ditto ...	Dec. 3	Dy. 12mo; 148	47th; 4,000	P.	0 6 0	Ditto.	
Oyáhed Baksh; the Ripon Library	,, 17 1902.	Dy. 12mo; 45	6th; 2,000	P.	0 4 0	.....	
Ditto ditto ...	Feb. 17	Dy. 12mo; 36	7th; 1,000	P.	0 3 0	.....	
	1901.						
C. J. Pritchard; K. B. Basu ...	Dec. 16	Rl. 8vo; 241	1st; 500	P.	5 0 0	The author.	
Rám Nárayan Dhar; the author ...	Oct. 28	Dy. 8vo; 177	2nd; 1,000	P.	2 8 0	The author, 26-3, Scott's Lane, Calcutta.	
R. Datta	Dec. 18	Dy. 12mo; 122	1st; 350	P.	.....	Kumár Devendra Náráyan Ráy, Calcutta.	
R. N. Dhárá; the author ...	Nov. 10 1902.	D.cr. 16mo; 166	1st; 1,000	P.	1 0 0	The author, Nadia.	
Hari Charan Dás; the Society for the Resuscitation of Indian Literature.	Jan. 5	D.fc. 8vo; 536	1st; 1,000	P.	3 0 0	Manmatha Náth Datta, 40, Nayánchánd Datta's Street, Calcutta.	
Rev. C. H. Harvey; the author ...	Nov. 23	Rl. 8vo; 194	1st; 2,000	P.	.....	.....	
Nikunja Viháří Chaudhurí ..	Feb. 20	Rl. 8vo; 24	1st; 200	P.	.....	The author, Kumarkháli, Nadia.	
Manmatha Náth Mitra; the author	Jan. 22	D.cr. 16mo; 69	1st; 200	P.	.....	The author, 209, Lower Circular Road, Calcutta.	
	1901.						
Sányál and Co.; N. C. Datta and Co.	Dec. 20	D.fc. 16mo; 98	11th; 5,000	P.	0 6 0	The author, Calcutta.	
U. C. Nandí; S. C. Adhya and Co.	,, 25	Dy. 8vo; 98	1st; 1,000	P.	0 8 0	S. C. Adhya and Co., 15, Haladhar Barddhan's Lane, Calcutta.	
Bhánu Chandra Dás; J. C. Nág ...	,, 18 1902	Dy. 12mo; 24	1st; 1,000	P.	0 3 0	.....	
R. Datta; P. Mukhopádhyáy and Sons.	Jan. 20	D.cr. 16mo; 46	1st; 2,000	P.	.....	The author, Calcutta.	
	1901.						
Bípin Viháří Basák; Basu, Banerji and Co.	Nov.	Dy. 8vo; 396	3rd; 1,000	P.	3 0 0	The author, 40, Sukea's Street, Calcutta.	
U. C. Sámanta; the Students' Library.	Oct. 14	D.cr. 16mo; 106	1st; 1,150	P.	0 8 0	The author, 67, College Street, Calcutta.	
G. C. Basu and Co.; the Sanskrit Press Depository,	Dec. 17 1902.	Dy. 16mo; 89	6th; 6,000	P.	0 4 0	The author, 2, Jagadís Náth Ráy's Lane, Calcutta.	
R. Datta; B Banerji and Co. ...	Jan. 2	D.cr. 16mo; 80	New and revised; 1,000.	P.	0 5 0	The author, Noákháli.	
R. Datta; Ghosh, Som and Sen ...	,, 2	D.cr. 16mo; 74	1st; 2,000	P.	0 4 0	The publishers, Noakhali.	
N. C. Pál; S. K. Láhirí and Co. ...	,, 15	Cr. 8vo; 56	1st; 500	P.	0 4 0	D. B. Set. M.A., Valarám De's Street, Calcutta.	

1 Serial number.	2 Registration number.	3 Title, with an English translation of the same when not in that language, the language of the book, and the subject.	4 Name of author, translator, or editor of the book, or any part of it.	5 Place of printing and publication.
		ENGLISH BOOKS—contd.		
		LANGUAGE—*concld.*		
		Educational—		
19	173	Popular Selections from Popular and Modern English Literature.	B. K. Banerji	203-2; 25; Cornwallis Street, Calcutta
20	1378	English Primer First Book	D. N. Basu	211; 30; Cornwallis Street, Calcutta ...
21	1887	Possible Questions on English Text, Entrance Examination, 1903.	H. A. Stark, B.A.	11, Wellesley Street; 103-3, College Street, and 88-3, Serpentine Lane; Calcutta.
22	136	A Manual of English Grammar ...	Kunja Vihárí Basu, M.A., B.L. ...	64, Akhil Mistri's Lane, Calcutta ...
23	1759	An Analysis of Burke's Speeches on American Taxation and on Conciliation with America and of the Letter to the Sheriffs of Bristol.	E. M. Wheeler, M.A.	Ditto ditto ...
24	1840	A Key to Black's Life of Goldsmith in form of Questions and Answers.	Narendra Nath Ráy, M.A. ...	Ditto ditto ...
25	1897	Notes on Burke's Speeches on American Taxation and Conciliation with the Colonies.	.....	78, Amherst Street, Calcutta ...
26	1721	Possible Questions on the English Entrance Course for 1902, with Hints and Answers. Part 1.	Hari Krishna Adhikárí	144, Amherst Street; 30, Cornwallis Street; Calcutta.
27	43	A New English Reader	Mati Lál Chatterji	8, Jackson's Lane, Calcutta; Howrah ...
28	30	Model Selections from English Literature...	Dína Bandhu Majumdar and Satya Bhúshan Datta, B.A.	Dacca; 21-1, Pataldángá Lane, Calcutta
29	6	Simple English Reader	Govinda Hari Dhar	Dacca ... ...
30	103	Macaulay's Essay on Milton	Jyotish Chandra Banerji ...	Do. ... ...
31	102	Model Questions with Model Answers to the Entrance Course in English for 1903.	Vrindávan Dhar	Do. ... ...
32	99	Model Spelling-Book	Ditto	Do. ... ...
33	30	The English Spelling-Book	Asoka Chandra Banerji	Munshigunj, Dacca ... ...
34	77	The Model English Reader	Avinás Chandra Banerji ...	Dacca ... ...
35	10	Model Questions with Answers on Burke's Speeches on American Taxation, on Conciliation with America, and on the Letter to the Sheriffs of Bristol.	Hem Chandra Sarkár	Rájsháhi ... ...
36	8	A Passport to Macbeth	Bábu Ganes Lál	Bhagalpur ... ...
		LAW.		
37	2	Bye-laws under section 350, Act III (B.C.) of 1884, as amended up to the 1st November 1896, for the Balasore Municipality.	.....	The Vinod Press, Balasore ... ...
38	31	Furaiz or the Mahomedan Law of Inheritance.	Satís Chandra Banerji	The Genderiya Press, Dacca ... ...
39	13	A Hand-Book of Criminal Cases containing a Verbatim Reprint of all Criminal Cases reported in Vols. I to XV, Calcutta Series, I. L. R.	Compiled by D. E. Cranenburgh ...	8 to 5, Bow Street, Calcutta ... ...
40	14	Ditto ditto reported in Vols. XVI to XXVI, Calcutta Series, I. L. R.	Ditto ...	Ditto ... ...
41	15	Ditto ditto reported in Vols. I to XXII, Madras Series, I. L. R.	Ditto ...	Ditto ... ...
42	16	Ditto ditto reported in Vols. I to XXI, Allahabad Series, I. L. R.	Ditto ...	Ditto ... ...
43	17	Ditto ditto reported in Vols. I to XXIII, Bombay Series, I. L. R.	Ditto ...	Ditto ... ...
44	47	The Law of Mortgage in India	Rás Vihárí Ghosh	5 6, Government Place, Calcutta ...
45	1874	The Land Acquisition Acts, being Act I of 1894 and Act XVIII of 1895.	F. E. Pargiter	45, Beniatolá Lane; 54, College Street; Calcutta.
		MEDICINE.		
46	1849	Practical Notes on the Suprapathy Remedies. (E).	Rájendra Lál Snr	89, Syámbázár Street, Calcutta ...
47	1890	The Ayurvedic System of Medicine. Vol. I. (N.) (T).	Nagendra Nath Sen	150-24; 18-1; Lower Chitpur Road, Calcutta.
		MISCELLANEOUS.		
48	7	An Aid to the Detection of Crime ..	Dínabandhu Bhaumik and Ánanda Mohan Guha.	The Bihar Angel Press, Bhagalpur ...
49	1	Memorandum and Articles of Association of the Mymensing Sáhitya Sabhá Limited.	Manomohan Sen	The Básanti Press, Mymensing ...
50	2	Om Aryya-Bála Samáj—An Association for Aryan Youths.	Ramesh Chandra Ghosh	Ditto ...
51	26	Report of the C. M. S. Santal Native Church Council, 1900-1901.	Rev. D. Marcus Brown	Pokhuria, Manbhum ... ...
52	45	Telegraph Code Book for Gunnies, Hessian, and Twine.	Osmán Jamall	9-5; New China Bázár Street, Calcutta
53	63	Tea Culture in India	Rádhánáth De	Bankipur ... ...
54	107	Speeches and Papers on Indian Questions, 1897 to 1900.	R. C. Datta	29, Beadon Street, Calcutta ... ...
55	121	The India Racing Record, Vol. I ...	J. Escot-Bowder	4, Esplanade Road West, Calcutta ...

First Quarter ending 31st March 1902—continued.

6	7	8	9	10	11	12	13
Name or firm of printer and of publisher.	Date of issue from the press or of the publication.	Size and number of sheets, leaves, or pages.	Number of edition and number of copies of which the edition consists.	Printed or litho'd.	Price at which the book is sold to the public.	Name and residence of the proprietor of copyright, or any part of it.	Copyright registered or not.
	1901.				Rs. A. P.		
P. C. Sáhá; B. Banerji and Co. ...	„ 1	D'cr. 16mo; 166	2nd; 1,000	P.	0 12 0	B. Banerji and Co. and B. K. Banerji.	
Kárttik Chandra Datta; the Sanskrit Press Depository.	Nov. 20	D.fc. 16mo; 62	7th; 6,000		0 3 0	The author, 2, Jagadís Náth Ráy's Lane, Calcutta.	
M. Mánná; N. C. Datta and Co. ...	Nov. 11	Dy. 12mo; 95	1st; 3,000	P.	0 12 0	The author, 159, Lower Circular Road, Calcutta.	
	1902.						
Hari Dás Ghosh; Kedár Náth Basu	Jan. 10	D.fc. 16mo; 164	1st; 1,000	P.	0 12 0	The publisher 64, Akhil Mistri's Lane, Calcutta.	
	1901.						
Ditto ditto	Nov. 1	D. cr. 16mo; 50	1st; 1,000	P.	0 8 0	Ditto ditto.	
Ditto ditto	„ 10	Dy. 12mo; 112	1st; 1,000	P.	0 12 0	The publisher, 28-4, Akhil Mistri's Lane, Calcutta.	
Hari Charan Mánná; the New Britannia Press Depository.	„ 28	Dy. 12mo; 128	3rd; 600	P.	0 8 0	The new Britannia Press Depository, 78, Amherst Street, Calcutta.	
Gopál Chandra Niyogí; the Sanskrit Press Depository.	Oct. 10	D.fc. 16mo; 32	1st; 1,000	P.	0 4 0	The author.	
	1902.						
Nanda Lál Datta; G. C. Mukherji	Jan. 6	D. cr. 16mo; 283	3rd; 2,000	P.	1 0 0	The author, Rámkrishnapur, Howrah.	
Mathurá Nath De; Gagan Chandra Datta.	„ 1	Dy. 12mo; 136	1st; 1,000	P.	0 12 0	.....	
Revatí Mohan Dás; Hari Rám Dhar.	Dec. 23	Dy. 8vo; 111	1st; 4,000	P.	0 12 0	.....	
Ditto ditto	Mar. 7	Dy. 12mo; 158	1st; 1,000	P.	1 4 0	.....	
Ditto ditto	„ 7	Dy. 12mo; 271	1st; 4,000	P.	0 14 0	.....	
Ditto ditto	Feb. 21	Dy. 12mo; 71	4th; 1,000	P.	0 2 6	.....	
	1901.						
Sarat Chandra Guha; the author ...	Dec. 28	Dy. 12mo; 40	1st; 1,000	P.	0 2 0	.....	
Bhánu Chandra Dás; Upendra Lál Dás Gupta.	Feb. 2	Dy. 8vo; 68	1st; 1,000	P.	0 6 0	.....	
Nikunja Vihárí Chaudhurí ...	Jan. 1	Dy. 12mo; 50	1st; 500	P.	0 8 0	The author, Mágura, Ráyganj, Pabna.	
Charles Peter; the author ...	Feb. 15	Dy. 12mo; 68	1st; 500	P.	0 6 0	The author, Nayábázár, Bhagalpur.	
	1902.						
Vinod Vihárí De	Jan. 8	Dy. 8vo; 8	1st; 500	P.	.....	.....	
Bhánu Chandra Dás; Kailás Chandra Chakravarti.	„ 2	Rl.; 1 sheet	1st; 100	P.	0 8 0	.....	
	1901.						
B. Baráj	Dec. 24	Rl. 8vo; 1,065	1st; 4,000	P.	40-0-0 for complete set.	The compilor, 3 to 5, Bow Street, Calcutta.	
Ditto	„ 24	Rl. 8vo; 1,322	1st; 4,000	P.	.....	Ditto ditto.	
Ditto	„ 24	Rl. 8vo; 1,104	1st; 4,000	P.	.....	Ditto ditto.	
Ditto	„ 24	Rl. 8vo; 1,420	1st; 4,000	P.	.....	Ditto ditto.	
Ditto	„ 24	Rl. 8vo; 1,380	1st; 4,000	P.	.....	Ditto ditto.	
	1901.						
Thacker Spink and Co. ...	Dec. 12	Rl. 8vo; 1,051	3rd; 2,000	P.	16 0 0	The author.	
Sasibhúshan Chakravartí; S K. Lahirí and Co.	Nov. 15	Dy. 8vo; 224	4th; 775	P.	5 0 0	The author, 3, Middleton Street, Calcutta.	
H. C. Ghosh; Anil Chandra Niyogí	Dec. 7	F'cap 8vo; 16	1st; 200	P.	0 4 0	The author, 104, Cornwallis Street, Calcutta.	
The Nagendra Printing Works; Kevalrám Chatterji.	Nov. 23	Dy. 8vo; 500	1st; 1,000	P.	4 0 0	The author, 18-1, Lower Chitpur Road, Calcutta.	
	1902.						
Charles Peter; the authors ...	Jan. 28	Cr. 8vo; 274	1st; 1,000	P.	2 4 0	The authors, Bhagalpur.	
Ráma Chandra Ananta ..	June 12	F'cap 8vo; 8	1st; 250	P.	.....	The author, Mymensing.	
	1902.						
Ditto ...	Jan. 13	Dy. 12mo; 12	1st; 1,000	P.	.....	Ditto.	
A. Campbell	„ 30	Dy. 8vo; 20	1st; 150	P.	.....	... ..	
Abraham Brothers and Co.; the author.	„ 1	F'cap.; 41	1st; 75	P.	.....	The author, 18, Ezra Street, Calcutta.	
	1901.						
Sivanandan Lál; the author ...	Dec. 26	Dy. 8vo; 8	1st; 1,000	P.	0 8 0	The author, 99, Upper Circular Road, Calcutta.	
S. K. Sáhá; the Elm Press ...	„ 25	D.cr. 16mo; 334	1st; 1,000	P.	2 0 0	.....	
Paul C. Moset; the author ...	„ 30	Cr. 8vo; 621	1st; 1,000	P.	15-0-0 for two volumes.	The author, Arthur Villa, Simla.	

1 Serial number.	2 Registration number.	3 Title, with in English translation of the same when not in that language, the language of the book, and the subject.	4 Name of author, translator, or editor of the book, or any part of it.	5 Place of printing and publication.
		ENGLISH BOOKS—concld.		
		MISCELLANEOUS—*concld.*		
56	121	The India Racing Records, Vol. II ...	J. Escot-Bowder	4, Esplanade Road, West, Calcutta ...
57	165	Addresses on Educational Matters ...	K. G. Gupta	At the Orissa Mission Press, Cuttack .
58	1716	Education in India	Krishna Chandra Ráy	114 ; 37 ; Amherst Street, Calcutta ...
59	1705	Mahávogí Keshub and Europe. Keshub the Great Ascetic and Europe.	B. Majumdár	2, Hari Pál's Lane, Calcutta ...
60	1772	Sitá. A name	Jogíndra Náth Tarkachudámani "of Benares. Government honour, A.M., Law, etc."	60, Páthuriaghátá Street ; 22, Krishna Sinha's Lane ; Calcutta.
61	1787	Higher Education in Bengal as influenced by the Calcutta University.	N. N. Ghosh	10, Haladhar Barddhan's Lane ; 43, Bánchhárám Akrur's Lane, Calcutta.
62	1820	Petitioners' Guide	G. C. Mukherji	122 ; 20 ; Amherst Street, Calcutta ...
63	1833	Athletic Sports and how to run them ...	W. S. Burke	8, Wellesley Place, Calcutta ... ...
64	...	Specification Pamphlets	G. Penn. Simkins	Chupra . . ..
65	1907	Bibliotheca Indica. New Series. No. 1001. Ahsanu-T-Taqásim Fi Márifati-L-Aqálím known as Al-Muquaddasi. Vol. I. Fasc. III. (T).	Translated by Surgeon-Lieutenant-Colonel G. S. A. Ranking, M.D., and R. F. Azoo.	41, Lower Circular Road ; 57, Park Street ; Calcutta.
		Educational—		
66	5	An Epitome of the Citizen of India ...	Rámgopál Chatterji	Konnagar, Serampore ... ...
67	104	The Bengal Kindergarten ...	Kalipada Basu	34, Musalmánpárá Lane ; 65, College Street, Calcutta.
		PHILOSOPHY.		
	28	The Vedánta and Its Relation to Modern Thought. Vol. I.	Sítá Náth Tattvabhúshan ...	211, Cornwallis Street ; 75-2, Bhuvan Mohan Sarkár's Lane ; Calcutta.
		POETRY.		
		ne Lay of Mahásthán Garh	H. S. Taylor	The Ráy Press, Bogra ... ...
		oms by Joseph Furtado	Joseph Furtado	5-6, Government Place, Calcutta ...
		Educational—		
	1850	The Deserted Village	Narendra Náth Ráy	64, Akhil Mistri's Lane, Calcutta ...
	1875	Paradise Lost. Book II	Upendra Náth Máitra	45, Beniatola Lane ; 54, College Street ; Calcutta.
		RELIGION.		
73	123	A Prose English Translation of the Mahábhárata. Vols. IX-X. Part. XXIV. (T.)(H).	Edited by Manmatha Náth Datta .	40, Nayán Chánd Datta's Street, Calcutta.
74	144	An open Letter to Rev. Kálicharan Banerji in vindication of the Hon'ble Mr. Surendra Náth Banerji against Christian Missionary misrepresentations. (C).	Satís Chandra Mukherji	The New Aryya Mission Press, 10, Sambhu Chandra Chatterji's Street, Calcutta.
75	169	A Discourse on the Unity in Religion. (H.)...	Púrnánanda Brahmachárí .	211, Cornwallis Street, Calcutta ..
76	192	The Great Congress. (C.)	Rev. W. R. James	41, Lower Circular Road ; 23, Chowringhi Road ; Calcutta.
77	1728	The Wealth of India. Vol. IX. Parts I—VII. (H).	Manmatha Náth Datta	40, Nayán Chánd Datta's Street, Calcutta.
78	1767	The English Works of Rájá Rám Mohan Ráy. Vol. III. (B.)	Edited by Yogendra Chandra Ghosh	98, Harrison Road ; 15, Sarkár's Lane ; Calcutta.
		SCIENCE (MATHEMATICAL).		
79	48	Trigonometry for Seamen	W. S. Hoseason	5-6, Government Place, Calcutta ...
		Educational—		
80	64	A Book on Surveying, with Illustrations and Questions.	S. Gupta	Bankipur ... ...
81	82	Hints for Solution of the Difficult Examples in Algebra. Part I.	Gourisankar De	10, Haladhar Barddhan's Lane ; Wellington Street ; Calcutta.
82	111	Lecture Notes on Algebra	Rájendra Náth Kánjilál ...	39, Mirzapur Street, Calcutta ...
		SCIENCE (NATURAL AND OTHER).		
		Educational—		
83	1904	Elementary Lessons in Botany	S. K. Chatterji	25 Pataldángá Street ; City College ; Calcutta.
		HINDI BOOKS.		
		HISTORY (INCLUDING GEOGRAPHY).		
		Educational—		
1	67	Bangál Ká Itihás. History of Bengal ...	Gokarna Sinha and Lakshmí Misra	The Khargavilás Press, Bankipur ...
		LANGUAGE.		
		Educational—		
2	68	Bálabodh. Knowledge for Children ..	Rámdín Sinha	Ditto ...
3	73	Níti Taranga Ki Saral Vyákhyá. A Key to Níti Taranga. Part II.	Bhagaván Saran Pándo and Udit Náráyan Sinha.	The Bihár Bandhu Press, Bankipur ; Barhamnia, Kharagpur, Monghyr.
4	...	Hindí Ká Pahalá Pustak. Hindi Reader. No. 1.	Pándo Rámávatár Sarmá Sáhityácháryya.	The Sáran Sudhákar Press, Ratanpurá, Chuprá.

First Quarter ending 31st March 1902—continued.

6	7	8	9	10	11	12	13
Name or firm of printer and of publisher.	Date of issue from the press or of the publication.	Size and number of sheets, leaves, or pages.	Number of edition and number of copies of which the edition consists.	Printed or litho'd.	Price at which the book is sold to the public.	Name and residence of the proprietor of copyright, or any part of it.	Copyright registered or not.
	1901.						
Paul C. Moset; the author ...	Dec. 30	Cr. 8vo; 781	1st; 1,100	P.	.....	The author, Arthur Villa, Simla.	
Rev. R. J. Grundy	Nov. 28	Cr. 8vo; 14	1st; 500	P.	.....	The author, Cuttack.	
Gopál Chandra Niyogí; the author.	Oct. 13	Dy. 8vo; 37	1st; 24	P.	.....	The author.	
N. L. Sil; the author ...	Oct. 18	Dy. 8vo; 66	1st; 500	P.	.....		
H. C. Dás; the author ...	Nov. 2	Dy. 8vo; 64	2nd; 262	P.	£ s. d. 0 1 0	The author, Calcutta.	
U. C. Nandí; A. K. Basu ...	„ 2	Dy. 8vo; 25	1st; 500	P.	Rs. A. P. 0 4 0	S. C. Adhya and Co., 15, Haladhar Barddhan's Lane, Calcutta.	
N. G. Chakravartí; G. C. Mukherji and Sons.	Oct. 26	D.fc. 16mo; 295	4th; 1,000	P.	1 0 0	The publisher, 20, Amherst Street, Calcutta.	
Earnest Acton; Walter Locke and Co.	Dec. 3	Cr. 8vo; 58	1st; 500	P.	0 8 0	The author, 9, Bentinck Street, Calcutta.	
Dharam Dás Sinha	Jan. 24	Dy. 8vo; 62	1st; 25	P.	.....	.....	
	1901.						
Rev. C. H. Harvey; the Asiatic Society of Bengal.	Dec. 3	Dy. 8vo; 96	1st; 500	P.	.....	... .	
	1902.						
B. N. Ghosh; the author ...	Jan. 29	Dy. 16mo; 68	1st; 1,000	P.	0 8 0	The author, Konnagar, Serampore.	
K. C. Basu; S. C. Basu ...	„ 1	Cr. 8vo; 187	1st; 100	P.	0 8 0	. .	
	1901.						
Kárttik Chandra Datta; the author.	Sep. 2	D. cr. 16mo; 187	1st; 1,000	P.	0 4 0	The author, 75-2, Bhuvan Mohan Sarkár's Lane, Calcutta.	
Sekh Zamíruddin; the author ..	Dec. 28	Dy. 8vo; 9	1st; 300	P.	.....	.....	
Thacker, Spink and Co. ...	„ 12	Cr. 8vo; 118	1st; 300	P.	2 0 0	The author.	
H. D. Ghosh; Kedár Náth Basu ...	Nov. 16	D. cr. 16mo; 64	1st; 1,000	P.	0 8 0	The publisher, 28-4, Akhil Mistri's Lane, Calcutta.	
Sasí Bhúshan Chakravartí; S. K. Láhirí.	„ 20	D. cr. 16mo; 180	4th; 2,000	P.	0 12 0	The author, Serampore.	
	1902.						
Hari Charan Dás; Rás Mohan Sarkár.	Jan. 21	Rl. 8vo; 48	1st; 5,000	P.	10 0 0	The author, 40, Nayán Chánd Datta's Street, Calcutta.	
	1901.						
U. Rakshit	Dec. 25	Dy. 8vo; 4	1st; 2,000	P.	.....	The author, Bhawanipur.	
Kárttik Chandra Datta; the author.	„ 31	Dy. 12mo; 18	1st; 1,000	P.	0 2 0	The author, Bidghor, Tipperah.	
Rev. C. H. Harvey; the Christian Tract and Book Society.	„ 24	Dy. 8vo; 2	1st; 20,000	P.	Nil	. ....	
Hari Charan Dás; the author ...	Oct. 30	Dy. 8vo; 280	1st; 1,250	P.	6 0-0 per year.	The author, 40, Nayán Chánd Datta's Street, Calcutta.	
Rám Náráyan Dhar; Srí Kánta Ráy	Nov. 2	D. cr. 16mo; 850	3rd; 1,100	P.	10 0 0	Srí Kánta Ráy, 15, Sarkár's Lane, Calcutta.	
Thacker, Spink and Co. ...	Dec. 12	D. cr. 16mo; 53	1st; 500	P.	1 8 0	The author.	
N. C. Chakravarti; the author ...	„ 20	Rl. 8vo; 54	1st; 500	P.	1 0 0	The author, Bankipur.	
	1902.						
U. C. Nandí; S. C. Adhya and Co.	Jan. 2	D. cr. 8vo; 322	1st; 2,000	P.	1 4 0	The publisher, 15, Haladhar Barddhan's Lane, Calcutta.	
Lalit Mohan Ghosh; the author ...	„ 10	Cr. 8vo; 80	1st; 1,000	P	0 8 0	The author, 2, St. James's Lane Bow Bazar, Calcutta.	
K. P. Chakravartí; the author ...	Dec. 21	Dy. 12mo; 24	1st; 500	P.	.....	The author.	
	1901.						
Chandí Prasád Sinha	Dec. 24	Dy. 12mo; 72	1st; 1,000	P.	0 3 0	Rámdin Sinha, Khargavilás Press, Bankipur.	
Ditto	„ 26	Dy. 12mo; 75	1st; 1,000	P.	0 3 0	Ditto ditto.	
	1902.						
Aklulál; the authors	Jan. 5	Dy. 12mo; 34	1st; 1,000	P.	0 2 0	The authors, Barhamnia, P.O. Khargpur, Monghyr.	
Rámdhárí Bhakta	Feb. 1	Dy. 8vo; 16	1st; 1,000	P.	0 1 0	The author, Patna Collegiate School, Patna.	

1	2	3	4	5
number.	Registration number.	Title, with an English translation of the same when not in that language, the language of the book, and the subject.	Name of author, translator, or editor of the book, or any part of it.	Place of printing and publication.
		HINDI BOOKS—concld.		
		MISCELLANEOUS.		
5	72	Bábhana. The Name of a Caste	Kálí Charan Sinha	The Bihár Bandhu Press, Bankipur; Bibhutpur, Dvarbháńgá.
		Educational—		
6	65	Bálasikshá. Instruction for Children. Part I.	Házárílál	The Khargavilás Press; Patna Chauk; Bankipur.
7	195	Ka Ka Harí. "Hindi-Káithi First Book"	Rev. G. J. Dann	The Baptist Mission Press; 23 Chowringhi Road, Calcutta.
		POETRY.		
8	79	Sudámá Charit. Life of Sudáma ...	Haladhar Dás	The Khargavilas Press, Bankipur ...
		RELIGION.		
9	74	Nának Satya Prakás. Exposition of Truths by Nának. (H).	Babu Krishnánanda Udásín ...	The Bihár Bandhu Press, Bankipur; Mahallá Murtájiganj, Patna City.
10	71	Atha Náma Kírttan. Chanting of the Names (of God). (H).	Siva Bálak Sinha	The Bihar Bandhu Press, Bankipur; Sabbalpur, Diyárá, Sáran.
11	77	Rámáyan Sár. The Essence of the Rámáyana. (H).	Bhagavatí Charan	The Khargavilás Press, Bankipur; Kalyánpur, Arrah.
12	1	Ráma Máhátma Chandriká. The Moonlight of the Greatness of Ráma. (H).	Ráma Charan Dás	The Star Press; Byodh, Begusarái; Monghyr.
13	9	Siva Bibhuti. The Glory of Siva. (H.) ...	Pandit Rájá Rám	The Bihár Angel Press; Minjanhát; Bhagalpur.
14	5	Pránáyám Manjarí. Blossoms of Pránáyám (an artificial process of breathing). (H.)...	Svámí Hansa Svarúp	The Trikutivilás Press, Muzaffarpur ...
15	30	Srímadbhágavat Bháshá. The Book of the Lord in Hindi. Part II. (H).	Baladev Prasád Misra	97 Muktárám Babu's Street, Calcutta...
16	1914	Sarvatra Sástra Páth Niyam. Rules of the Universal Reading of the Gospel. (C.)	Rev. G. J. Dann	The Baptist Mission Press; 10, Kyd Street; Calcutta.
17	1814	Singhbhum Dharma Patrí. The Singhbhum Religious Paper. (C).	Rev. A. Logsdail	The Baptist Mission Press, Calcutta; Cháibásá.
		SCIENCE (MATHEMATICAL).		
		Educational—		
18	66	Anka Ganit. The Elements of Arithmetic. Part I.	Gokarna Sinha and Raghuvír Prasád	The Khargavílás Press, Bankipur ...
19	78	Rekhá Ganit. Geometry. Part I . .	Mohan Lál Sinha	Ditto ...
20	1	Hisáb Ki Pahilí Pustak. Bin Uttar. First Arithmetic Book. Without Answers.	Rev. R. Kilgour	The Visitor Press, Darjeeling ...
		SCIENCE (NATURAL AND OTHER).		
		Educational—		
21	69	The Lower Primary Science Primer ...	Gakulánanda Prasád Varma and Lakshmí Náráyan Gupta.	The Khargavilás Press, Bankipur ...
		LEPCHA BOOKS.		
		BIOGRAPHY.		
1	2	Life of Jesus Christ in Lepcha	Rev. R. Kilgour, B.D.	The Visitor Press, Darjeeling ...
		MANIPURI BOOKS.		
		SCIENCE (MATHEMATICAL).		
		Educational—		
1	187	Maitailongí Dhárápát. Arithmetical Tables in Manipuri.	Munnál Sinha and Rev. W. Pettigrew.	41 Lower Circular Road, Calcutta; the School Library, Manipur, Assam.
		MUSALMANI-BENGALI BOOKS.		
		FICTION.		
1	106	Gájí Kálú-Champávatí. Two Names ...	Golám Maulá	The Alomí Press, Churihátta; Chakbázár; Dacca.
2	107	Surujjámál-Dud Meher O Gájí Kálu Champávatí. Four Names.	Ditto	Ditto ditto ...
3	16	Kechchá Chandrakalá. Story of Chandrakalá.	Eásin Háoládár	The Kásipur Press, Barisal ... ...
4	1889	Jámmilane Solemán. Two Names ...	Abdul Rahman Khalifá	155, Masjidbárí Street, Calcutta; Agarpur, Barisal.
		MISCELLANEOUS.		
5	5	Chhahi Mahabbati Tálenámá. A True Book of Divinition relating to Love.	Mahammad Rehánuddin ...	4, Kareyá Gorásthán Road, Entali Calcutta; Sáyestánagar, Noakhali.
6	3	Hedáyati-Dhuyá Arthát Makramálí Bhuánr Kechchhá. A Name, or the Story of Makramálí Bhuán.	Imánuddin Mollá	The Kailás Press, Comilla ... ...
7	1888	Asráre Márfat. Truths about Divine Knowledge.	Asrafálí Khán	155, Masjidbárí Street, Calcutta; Agarpur, Barisal.
		RELIGION.		
8	2	Nachhihate Echhlám. Teachings of Islám. (M.)	Majafar Ali Khandakár	The Jewel Press; Málgrám; Bagura ...
9	16	Neyámatul Echhlám. Benefits of Islám (M.)	Neyámat Kájí	The Tamoghna Press; Lablabí, Tánor; Rajsahi.
10	109	Ahákámal Moslemin. Ethics of Islám (M.)	Mále Mahammad	The Aliní Press, Churihátta; Chakbázár; Dacca.

First Quarter ending 31st March 1902—contiuued.

6	7	8	9	10	11	12	13
Name or firm of printer and of publisher.	Date of issue from the press or of the publication	Size and number of sheets, leaves, or pages.	Number of edition, and number of copies of which the edition consists.	Printed or litho'd.	Price at which the book is sold to the public.	Name and residence of the proprietor of copyright, or any part of it.	Copyright registered or not.
	1902.				Rs. A. P.		
Aklu Lál; Dwáraká Prasád Sinha...	Jan. 2	Dy. 12mo; 10	1st; 1,000	P.	.....	Kálí Charan Sinha, Amhara, Patna.	
	1901.						
Chandí Prasád Sinha; Kánhaiyá Lál Jaini.	Dec. 20	Dy. 12mo; 72	1st; 1,000	P.	0 2 0	The publisher, Bookseller, Patna.	No. 20. R. No. 4 11-1-02.
	1902						
Rev. C. H. Harvey; Christian Tract and Book Society.	Jan. 10	Cr. 8vo; 28	1st; 5,000	P.	0 0 6	.....	
Chandí Prasád Sinha	„ 25	Rl. 8vo; 159	1st; 500	P.	0 8 0	Rámdín Sinha, Khargavilás Press, Bankipur.	
Aklulál; Krishnánada Udásín ...	„ 10	Rl. 8vo; 202	1st; 1,000	P.	.....	The publisher, Sangat, Ranopáli, Ayodhyá.	
Aklulál; the author	„ 1	Rl. 8vo; 14	1st; 1,000	P.	0 2 0	The author, Sabbalpur, Diyárá, Sáran.	
Chandí Prasád Sinha, Rámánuj Saháy.	„ 13	Dy. 8vo; 17	1st; 1,000	P.	0 2 0	The author, Sakulá, Sáhábád.	
Bábu Lál; Rámádhín Mahato. ...	Feb. 22	Fc. 4to; 90	1st; 1,000	P.	.....	.....	No. 21. R. No. 5; 18-2-02.
Charles Peter; the author ...	„ 21	Dy. 16mo; 6	1st; 1,000	P.	0 0 9	The author, Head Master, Minjánhát, Bhagalpur.	
Rám Lál; Devi Prasád	Jan. 25	Dy. 12mo; 14	1st; 1,000	P.	0 1 0	.....	
	1901.						
Krishnánanda Sarmá	Dec. 20	S.rl.12mo;1,299	1st; 2,500	P.	.....	J. N. Dás and Co., 97, Muktárám Bábu's Street, Calcutta.	
Rev. C. H. Harvey; I. S. S. Union	„ 12	F'cap 8vo; 16	1st; 700	P.	0 0 6	.....	
Rev. C. H. Harvey; the editor ...	Oct. 19	Cr. 8vo; 8	1st; 1,000	P.	.....	.....	
Chandí Prasád Sinha	Dec. 22	Dy. 12mo; 107	1st; 1,000	P.	0 3 0	Rámdin Sinha, Khargavilás Press, Bankipur.	
	1902.						
Ditto	Jan. 21	Dy. 8vo; 80	1st; 200	P.	0 4 6	Ditto ditto.	
A. H. Gasper	„ 15	Dy. 8vo; 36	7th; 3,000	P.	0 1 0	The author, Scotch Mission, Darjeeling.	
	1901.						
Chandí Prasád Sinha	Dec. 27	Dy. 12mo; 115	1st; 1,000	P.	0 3 0	Rámdin Sinha, Khargavilás Press, Bankipur.	
	1902.						
A. H. Gasper; the author ..	Mar. 5	Rl. 8vo; 130	1st; 600	P.	0 1 0	The author, Scotch Mission, Darjeeling.	
	1901.						
Rev. C. H. Harvey; the School Library.	Dec. 27	Dy. 8vo; 24	1st; 1,500	P.	Nil	.....	
	1902.						
Hámidar Rahaman Khán; Hájji Alimuddin.	Mar. 9	Rl. 8vo; 112	9th; 3,000	P.	0 4 0	.....	
Ditto ditto	„ 8	Rl. 8vo; 112	9th; 3,000	P.	0 4 0	....	
Tárini Charan Das	Jan. 4	Rl. 8vo; 52	1st; 2,000	P.	0 3 0	.....	
Golám Yusaph; the author ...	Feb. 12	Rl. 8vo; 76	1st; 1,000	P.	0 2 0	The author, Agarpur, Barisal.	
Royájuddin Ahmad; the author ...	Jan. 24	Dy. 8vo; 20	1st; 1,000	P.	0 2 0	Mahammad Rohánuddin, Sáyestánagar, Noakhali.	
Gopál Chandra Dás	Dec. 28	Dy. 8vo; 32	1st; 1,000	P.	0 3 0	Imánuddin Mollá, Púrbabáliya, Pharkávaj, Tippera.	
	1901.						
Golám Yusaf; the author ...	Dec. 14	Rl. 8vo; 150	1st; 1,000	P.	0 4 0	The author, Agarpur, Barisal	
	1902.						
Mansarullá Mián	Feb. 1	Dy. 12mo; 16	1st; 1,000	P.	0 1 0	.....	
Mahammad Shakiruddin Sarkár; the author.	Jan. 27	Rl. 8vo; 96	1st; 1,000	P.	.....	Neyámat Kájí, Lablabá, Tánor, Rájsháhi.	
Hámidar Rahaman Khán; Alimuddin Ahammad.	Mar. 12	Rl. 8vo; 92	11th; 2,000	P.	0 6 0	.....	

1 Serial number.	2 Registration number.	3 Title, with an English translation of the same when not in that language, the language of the book, and the subject.	4 Name of author, translator, or editor of the book, or any part of it.	5 Place of printing and publication.
		***MUSALMANI-BENGALI BOOKS*—concld.**		
		RELIGION—*concld.*		
11	189	Ke Amáderjanye Saphâyat Karibon. "Who will intercede for us?" (C).	Rev. G. H. Rouse	41, Lower Circular Road; 23, Chowringhi Road; Calcutta.
12	191	Amár Báp Khodá. "God our Father." (C.)...	Ditto	Ditto ditto ...
13	..	Injil Ki Bátil Haiyáchhe? "Is the Gospel abrogated?" (C).	Ditto	Ditto ditto ...
		SANSKRIT BOOKS.		
		BIOGRAPHY.		
1	9	Vallála Charitam. The Life of Vallála ...	Edited by Mahámahopádhyáy Haraprasád Sástrí.	46, Bechu Chatterji's Street, Calcutta...
		LANGUAGE.		
2	1811	Bibliotheca Indica, New Series, No. 1000. Mahábhásya-Pradípodyotah. The Illuminator of the Lamp on the Great Scholium. Vol. II. Fasc. I. (R.)	Edited by Pandit Bahuvallabha Sástrí.	41, Lower Circular Road; 57, Park Street; Calcutta.
3	1908	Ditto ditto, New Series. No. 1002. Vol. II. Fasc. II.	Ditto ditto ...	Ditto ditto ...
4	1886	Amarakoshábhidhánam. The Dictionary by Amara Sinha.	Edited by Chandra Mohan Tarkaratna.	3-4, Gaur Mohan Mukherji's Street; 30, Cornwallis Street; Calcutta.
		Educational—		
5	15	Nitimanjarí. Blossoms of Morals ...	Jajnesvar Vedántatírtha	Chinsura ... ...
6	89	Sanskrita Padamanjarí. Blossoms of Words in Sanskrit. Part I.	Somnáth Mukhopádhyáy ...	62, Amherst Street; 30, Cornwallis Street; Calcutta.
7	135	Saral Pátham. Easy Lessons	Káminí Kánta Vidyáratna and Kálís Chandra Vidyávinod.	64, Akhil Mistri's Lane, Calcutta ...
8	166	Prabandha Prasúnam. Flowers of Discourses. Part I.	Umá Charan Banerji	17, Madan Mitra's Lane; 68, College Street; Calcutta.
9	1	Sub-Rahasyam. Essential Truths about Case-suffixes.	Annadá Charan Tarkachuramani ...	Rámendra Press, Noákháli ... ...
10	61	Sankshiptasár Vyákaranam. Essence of Grammar in Brief. (R.)	Edited by Jívánanda Vidyáságar ..	The new Aryya Mission Press, 10 Sambhu Chandra Chatterji's Street; Patuátolá Lane; Calcutta.
11	1877	Dhátu Vivek. Discriminating Knowledge of Roots.	Akshay Kumár Vidyávinod ...	45, Beniatolá Lane; 54, College Street; Calcutta.
		POETRY.		
12	62	Vishád Satakam. One Hundred Verses on Distress.	Vasanta Kumár Kávyatírtha ..	New Aryya Mission Press. 10, Sambhu Chandra Chatterji's Street, Calcutta; Jessore.
		RELIGION.		
13	28	Suddhi Nirnayah. Determination of Purification. (R.) (H).	Edited by Umápati Sarmá ..	The Union Press; Dvarbhángá ...
14	29	Rámastavarája—Rámarakshá—Ráma-Hridaya—Jatáyu Krita Rámastotra Rámáshtakam. The King of Hymns in honour of Ráma, Protecting Hymns in honour of Ráma, the Esoteric Truths about Ráma, the Hymns in honour of Ráma and Eight verses in honour of Ráma by Jatáyu (the name of a bird). (R.) (H).	Panchánan Jhá	Ditto ... ...
15	1813	Bibliotheca Indica, New Series, No. 995. Upamiti Bhava Prapanchá Kathá. Story of the Course of Mundane Existence illustrated by an Allegory. Fasc. IV. (R.) (H).	Edited by Peter Peterson and Professor Dr. Hermann Jacobi.	41, Lower Circular Road; 57, Park Street; Calcutta.
16	1812	Bibliotheca Indica, New Series, No. 996—Satapatha Bráhmanam. The name of a Bráhmana (a class of Vedic works). Vol. I. Fasc. V. (R.) (H).	Edited by Satyavrata Sámasramí ...	Ditto ditto ...
17	1909	Bibliotheca Indica, New Series, No. 999—Apastamba Srauta Sútram Krishnayajurvedíyam. The Srauta Sútras of Apastamba belonging to the Black Yajurveda. Vol. III. Fasc. XVI. (R.) (H).	Edited by Dr. Richard Garbe ...	Ditto ditto ...
18	1846	Stavamálá. Garland of Hymns (R.) (H.)	.....	38-2, Bhaváni Charan Datta's Street, Calcutta.
19	1835	Tithi Tattvam. Truths about the Lunar Day. (R.) (H).	Edited by Chandí Charan Smritibhúshan.	138, Masjidbári Street; 11-1, Garánhátá Street; Calcutta.
20	108	Udváha Tattva. Truths about Marriage. (R.) (H).	Ditto ditto ...	Ditto ditto ...
21	22	Vaisyadeva Paddhati. The Ritual for the Vaisyadeva Ceremony. (R.) (H).	Sarvesvar Acháryya	The Arunoday Press, Cuttack ...
22	23	Gopála-Sahasranám. One Hundred Names of Gopála (Vishnu). (R.) (H).	Kapileswar Vidyábhúshan ...	Ditto ...
23	45	Navagraha Stotra. Hymns in honour of the Nine Planets. (R.) (H).	Ditto	Ditto ...
24	36	Kavachamálikú. Garland of Kavachas (Protective Verses). Part I. (R). (H.)	.....	The Ráy Press, Cuttack ... ...
25	52	Yajurvedíya Nitya Karma Paddhati Parisishta Sahit. Ritual for Daily Religious Rites according to the Yajurveda, with an Appendix. Part II. (R.) (H).	Vihárí Lál Pandit	The Darpanráj Press, Cuttack ...

First Quarter ending 31st March 1902—continued.

6	7	8	9	10	11	12	13
Name or firm of printer and of publisher.	Date of issue from the press or of the publication.	Size and number of sheets, leaves, or pages.	Number of edition and number of copies of which the edition consists.	Printed or lithog'd.	Price at which the book is sold to the public.	Name and residence of the proprietor of copyright, or any part of it.	Copyright registered or not.
	1901.				Rs. A. P.		
Rev. C. H. Harvey; C. T. and B. Society.	Dec. 24	Dy. 8vo; 4	1st; 20,000	P.	.....	.....	
Ditto ditto ...	„ 24	Dy. 8vo; 8	1st; 10,000	P.	.....	.....	
Ditto ditto ...	„ 24	Dy. 8vo; 4	1st; 10,000	P.	.....	.....	
	1901.						
R. Datta	Dec. 20	Dy. 12mo; 116	1st; 250	P.	.....	Kumár Dínendra Náráyan Ráy, Calcutta.	
Rev. C. H. Harvey; the Asiatic Society, Bengal.	Oct. 29	Dy. 8vo; 96	1st; 500	P.	.....	.....	
Ditto ditto ...	Dec. 10	Dy. 8vo; 96	1st; 500	P.	.....	.....	
S. Bhattácháryya; the Sanskrit Press Depository.	Nov. 28	Dy. 8vo; 341	1st; 1,000	P.	1 8 0	The editor, Sanskrit Press Depository, Calcutta.	
	1902.						
Kásínáth Bhattácháryya; the author.	Feb. 1	Dy. 12mo; 39	1st; 1,000	P.	0 5 0	The author, Chinsura.	
Upendra Nath Chakravarti; the Sanskrit Press Depository.	Jan. 16	Dy. 12mo; 58	3rd; 1,000	P.	0 5 0	Girindra Nath Mukherji and Harendra Nath Mukherji, Goari, Krishnagar.	
	1901.						
Hari Dás Ghosh; Kedár Náth Basu	Dec. 29	D.fc. 16mo; 48	1st; 1,000	P.	0 4 0	Kedár Náth Basu, 64, Akhil Mistri's Lane, Calcutta.	
	1902.						
Mánik Chandra Pál; Chakravarti and Co.	Jan. 24	D.cr. 16mo; 46	1st; 1,000	P.	0 4 0	The author, Principal, Burdwan Ráj College, Burdwan.	
Tárak Chandra Chakravartí ...	Jan. 1	Dy. 12mo; 116	1st; 500	P.	0 12 0	The author, Noakhali.	
	1901.						
U. Rakshit; the editor ...	Dec. 16	Rl. 12mo; 1,455	1st; 1,000	P.	5 0 0	The editor, Patuátolá Lane, Calcutta.	
Sasí Bhúshan Chakravartí; S. K. Láhirí and Co.	Nov. 25	Dy. 12mo; 72	2nd; 1,000	P.	0 10 0	S. K. Láhirí, 63-1, Harrison Road, Calcutta.	
U. Rakshit; Mahendra Náth Dás Basu.	Dec. 15	Dy. 12mo; 36	1st; 500	P.	.....	The author, Patuátolá Street, Calcutta.	
	1902.						
Kánta Vihárí Missra	Jan. 9	Dy. 8vo; 19	2nd; 500	P.	0 2 0	.....	
Ditto	„ 30	Dy. 16mo; 56	1st; 500	P.	0 2 0	.....	
	1901.						
Rev. C. H. Harvey; the Asiatic Society of Bengal.	Oct. 14	Dy. 8vo; 96	1st; 500	P.	.....	.....	
Ditto ditto ...	„ 16	Dy. 8vo; 96	1st; 500	P.	.....	.....	
Ditto ditto ...	Dec. 2	Dy. 8vo; 96	1st; 500	P.	.....	.....	
Arunoday Ráy	„ 1	Dy. 8vo; 121	1st; 20,000	P.	0 6 0	The Vangavásí Firm, Calcutta.	
Yogendra Náth Chakravartí; the editor.	„ 8	Dy. 8vo; 460	2nd; 1,500	P.	2 12 0	The editor, 11-1, Garánhátá Street, Calcutta.	
	1902.						
Ditto ditto ...	Jan. 22	Dy. 8vo; 80	2nd; 500	P.	0 8 0	Ditto ditto.	
Bhágavat Prasád Dán; Nityánanda Sáhu.	Feb. 5	Dy 16mo; 4	1st; 1,000	P.	0 0 6	Nityánada Sáhu, Chaudhurí Bázár, Cuttack.	
Bhágavat Prasád Dán; Madhusúdan Datta.	„ 5	Dy. 12mo; 16	6th; 1,000	P.	0 0 9	Madhusúdan Datta, Jagannáthballabh, Cuttack.	
Bhágavat Prasád Dán	Mar. 6	D.cf. 16mo; 16	7th; 3,000	P.	0 0 9	Bhágavat Prasád Dán, Cuttack.	
S. B. Ráy; G. C. Mahápátra ...	Feb. 10	Dy. 12mo; 17	1st; 1,000	P.	0 1 6	G. C. Mahápátra, Nayágar, Cuttack.	
Adam Samuel; the author ...	Mar. 7	Dy. 12mo; 300	1st; 2,000	P.	.....	The author, Chándni Chak, Cuttack.	

1	2	3	4	5
Serial number.	Registration number.	Title, with an English translation of the same when not in that language, the language of the book, and the subject.	Name of author, translator, or editor of the book, or any part of it.	Place of printing and publication.
		SANTALI BOOKS.		
		RELIGION.		
1	25	Koojon Puthi AR Prabhu Bhoj Rea' Ari. Ingland Kalisia Rea' Cali Loka Hor Parsite. Prayer Book and Sacrament of the Lord's Supper according to the Ritual of the Church of England. (C.)	Rev. J. Brown	Pokhuria, Manbhum; Barhaure, Santal Parganas.
		URDU BOOKS.		
		LANGUAGE.		
		Educational—		
1	147	Qáwáid-i-Benazir. A Grammar by Benazir	Maulvi Mirzá Ahmad Alí Kaukab ...	55, Imámbári Lane, Calcutta; Sáyestávád, Barisal.
		MEDICINE.		
2	161	Mojarrabát-i-Atíbba-i-Házeqin. Clinical Experience of Wise Physicians.	Hákim Golám Yahyá	55, Sundariá Patti, Calcutta ...
3	5	Resálá-i-Taun. A Treatise on Plague (E.)...	Dr. Pares Nath Chattarji ...	The Ahsánul Mátábe Press, Patna City; Chatterji's Homœopathic Pharmacy; Bankipore.
		MISCELLANEOUS.		
4	76	Darbár-i-Haq-o-Hedáyat. The Court of Truth and Righteousness.	Edited by Mahammad Ziáuddin Hánáfi.	The Hánáfiá Press, Lodhi Kátrá, Patna City.
5	11	Jalsa-i-Isláh-i-Qaum. An Association for Social Reform.	Khodá Baksa Chaudhurí ...	Gayá ... ...
6	3	Serájul Ibtedá Márufba Danish Afzá. Light to the Beginner, *alias* the Giver of Wisdom.	Mahammad Ján	The Mashárеq-i-Nur Press, Muzaffarpur
		RELIGION.		
7	82	Javáb-i-Sharar. Answer to Sharar (M.) ...	Mahammad Háidár	Mogulpura, Patna City; Jhunjwa, Sáran.
8	146	Qamarul Aqmár. The Moon of the Moons (M.)	Maulvi Qamruddin Lahari ...	55, Imámbári Lane; 78, Old Baitakkhána Bázár Road; Calcutta.
		URIYA BOOKS.		
		FICTION.		
1	48	Bhuvana Udyán. Garden of the World ...	Dhananjay Banerji	The Orissa Patriot Press, Mahammadiá Bázár, Cuttack.
		LANGUAGE.		
		Educational—		
2	15	Hastákshar. Handwriting	Balabhadra Pattanáyak	The Arunoday Press, Cuttack ...
3	11	Sáhitya Manjarí. Blossoms of Literature	Srímatí Avantí Devi	The Arunoday Press, Bálubázár; Sáhebzádábázár; Cuttack.
4	12	Sáhitya-Taranga. The Waves of Literature.	Madhu Súdan Ráo	The Cuttack Printing Co.'s Press, Cuttack.
5	3	Varnabodha. Knowledge of the Alphabet	Ditto	The Arunoday Press, Bálubázár; Sáhebzádábázár; Cuttack.
6	21	Chhándamálá Dvitíya Khandara Bálabodhiní Tíká. A Key to Chhándamálá, Part II, intended for the instruction of children.	Rám Krishna Ráo	The Arunoday Press, Bálubázár; Ganes Mandir; Cuttack.
7	40	Chhándamálá Vyákhyá. A Key to Chhándamálá.	Michhu Nanda	The Utkal Sáhitya Press, Bálubázár, Cuttack.
8	1	Bodhodayara Artha. A Key to Bodhodaya	Vata Krishna De	The Vinod Press, Barabáti, Balasore ...
		MEDICINE.		
9	46	Prasúti Paricharyyá. Nursing of Women in Confinement. (N).	Dr. Ráma Krishna Sáhu	Cuttack ... ...
		MISCELLANEOUS.		
10	7	Dhobá Dhobáni Dáyiká. Quarrel between a Washerman and Washerwoman.	Lakshmí Náráyan Dás	The Darpanráj Press, Chándni Chak; Jagannáthballabh; Cuttack.
11	13	Vividha Sangraha. Miscellaneous Collection	Mádhava Lál	The Arunoday Press, Bálubázár; Sutáhát; Cuttack.
12	20	Mangal Sangít. Auspicious Songs ...	Ráma Chandra Nanda Sarma ...	The Utkal Sáhitya Press, Bálubázár, Cuttack.
13	29	Hásyataranga. Waves of Laughter. Part II.	Balarám Dás	The Arunoday Press, Bálubazár; Dewánbázár; Cuttack.
14	42	Kathá Laharí Vá Utkal Káhání Sangraha. "Folk-Tales of Orissa." Part I.	.....	The Orissa Mission Press, College Lane, Cuttack.
		POETRY.		
15	6	Má Dáhání Pna Maduá. The Mother Witch and the Drunkard Son.	Ráma Chandra Nanda	The Darpan Ráj Press, Cuttack ...
16	33	Mangal Krityotsava. Festivals on Auspicious occasions. Part I.	Vraja Krishna Misra	The Utkal Sáhitya Press, Cuttack ...
17	41	Ditto ditto. Part II ...	Ditto	Ditto ditto ... ...
18	35	Satadal. Lotus	Chintámani Mahánti	The Ráy Press, Cuttack; Káupur, Bhadrakh, Balasore.
19	39	Chandraprabhá Kávya. The Poem about Chandraprabhá (a name).	Vírmitroday Deva Sinha ...	The Utkal Sáhitya Press; Sonpur; Cuttack.
20	44	Kapat Pásá. False Dice	Bhíma Dhibara	The Arunoday Press, Cuttack ...
21	9	Aja Viláp. Lamentation by King Aja. (T.)	Ratnákar Sarmá	The De's Utkal Press, 2, Mani Khám Street, Bamanda, Balasore.

First Quarter ending 31st March 1902—continued.

6	7	8	9	10	11	12	13
Name or firm of printer and of publisher.	Date of issue from the press or of the publication	Size and number of sheets, leaves, or pages.	Number of edition and number of copies of which the edition consists.	Printed or lithog'd.	Price at which the book is sold to the public.	Name and residence of the proprietor of copyright, or any part of it.	Copyright registered or not.
					Rs. A. P.		
A Campbell; the Church Missionary Society.	1902. Jan. 9	Dy. 12mo; 68	Reprint; 1,000	P.	0 1 0	.....	
Abul Mojaffar Maulá Baks Rizván; the author.	1901. Dec. 28	Dy. 8vo; 20	2nd; 3,000	L.	0 2 6	The author, Sáyestábád, Barisal.	
Mahammad Abdul Gafur; Mahammad Abdul Rasid.	1902. Jan. 5	Rl. 8vo; 136	1st; 1,000	L.	1 4 0	Háfiz Dost Mahammad Khowjá, Kalán Ghát, Patna.	
Mahammad Abdul Káder; the author.	Feb. 10	Dy. 8vo; 76	1st; 1,000	L.	1 0 0	The author, Bhikná Pahari, Bankipore.	No. 22; R. No. 2; 15-2-02.
Mahammad Abdul Wáhid Hánáfi...	„ 1	Rl. 8vo; 248	1st; 500	L.	1 8 0	Mahammad Abdul Wáhid Hánáfi, Lodhi Kátrá, Patna City	
Mahammad Mohsin	Mar. 11	Rl. 8vo; 16	1st; 1,000	L.	.....	The author, Gaya.	
Mahammad Ján	Jan. 8	Rl. 8vo; 54	1st; 400	L.	0 4 0	.....	
Ali Azhar	Feb. 7	Dy. 8vo; 276	1st; 500	L.	1 4 0	Ali Azhar, Jhanjwa, Bazarbandí, Sáran.	
Abul Mazaffer Maula Baks Rizván; the author.	Jan. 6	Rl. 8vo; 34	1st; 500	P.	0 2 0	The author, 78, Old Baitakkhaná Bázár Road, Calcutta.	
Madan Mohan Náyak	1902. Mar. 5	Dy. 12mo; 26	1st; 1,000	P.	0 2 0	The author, Mahammadiyá Bázár, Cuttack.	
Balabhadra Pattanáyak ...	Jan. 23	D.fc. 8vo; 32	1st; 1,000	P.	0 1 3	The author, School Mastor, Rasulkunda, Ganjam.	
Bhágavat Prasád Dán; Madhu Sádan Ráo.	1901. Dec. 31	Dy. 12mo; 72	1st; 1,000	P.	0 3 0	The authoress, Bálubázár, Cuttack.	
Bhágírathí Sáthiyá	1902. Jan. 10	Dy. 12mo; 201	1st; 1,000	P.	.....	The author, Sáhebzádábázár, Cuttack.	
Bhágavat Prasád Dán; the author	1901. Dec. 30	Dy. 12mo; 28	1st; 1,000	P.	0 1 0	Ditto ditto.	
Ditto ditto ...	1902. Feb. 5	Dy. 12mo; 52	4th; 1,000	P.	0 3 0	The author, Ganes Mandir, Cuttack.	
Visvanáth Kar	Mar. 1	Dy. 12mo; 26	9th; 1,000	P.	0 1 3	The author, Sutáhát, Cuttack.	
Vinod Vihárí De; Vata Krishna De.	Jan. 8	F'cap 8vo; 30	1st; 1,000	P.	0 1 6	The author, Barabáti, Balasore.	
Madan Mohan Náyak; the author	Mar. 5	F'cap 8vo; 24	1st; 1,000	P.	0 2 0	The author, Cuttack.	
Adam Samuel; Pánu Sáhu ...	1901. Dec. 30	Rl. 32mo; 12	1st; 1,000	P.	0 0 6	.....	
Bhágavat Prasád Dán; Sudarsan Nanda.	1902. Jan. 21	Dy. 12mo; 267	2nd; 1,000	P.	1 0 0	Sudarsan Nanda, Sutáhat, Cuttack.	
Visvanáth Kar	Feb. 5	F'cap 8vo; 7	1st; 500	P.	.....	The author, Dhenkánál, Orissa, Garjáta, Cuttack.	
Bhágavat Prasád Dán; Sekh Ján...	„ 24	Dy. 12mo; 11	2nd; 1,000	P.	0 1 0	Sekh Ján, Dewánbázár, Cuttack.	
Rev. R. G. Grundy; Rághavánanda Dás.	1901. Oct. 14	F'cap 8vo; 145	1st; 1,200	P.	0 8 0	The publisher, Cuttack ...	No. 23; R. No. 2; 14-11-01.
Printed by Adam Samuel; the author.	Dec. 24	Dy. 12mo; 12	2nd; 1,000	P.	0 1 3	The author, Dhenkánál, Cuttack.	
Visva Náth Kar	1902. Feb. 18	F'cap 8vo; 16	1st; 500	P.	.....	The author, Sadásivpur, Dhenkánál, Cuttack.	
Ditto	Mar. 1	F'cap 8vo; 11	1st; 500	P.	.....	Ditto ditto.	
S. B. Ráy; Mahendra Nath Banerji.	Feb. 18	F'cap 8vo; 20	1st; 1,000	P.	0 2 0	The author, Kánpur, Balasore.	
Visvanáth Kar; the author ...	Mar. 1	F'cap 8vo; 134	1st; 5,000	P.	.....	The author, Sonpur, Cuttack.	
Bhágavát Prasád Dán	„ 6	F'cap 8vo; 21	12th; 2,000	P.	0 1 0	Bhágavat Prasád Dán, Cuttack.	
K. P. Dás; Ratnákar Sarmá ...	.....	F'cap 8vo; 16	1st; 500	P.	.....	.....	

1 Serial number.	2 Registration number.	3 Title, with in English translation of the same when not in that language, the language of the book and the subject.	4 Name of author, translator, or editor of the book, or any part of it.	5 Place of printing and publication.
		URIYA BOOKS—concld.		
		RELIGION.		
22	18	Dharma Sástríya Vrittánta. Adibhág. Story of the Bible. Part I. (C).	W. Ahrens	The Orissa Mission Press, Cuttack ...
23	12	Chorakelí. Sports of Thief (Krishna) (H.) ...	Madhu Súdan Jáná	The Níhár Press, Contai ... ...
24	17	Rásalílá. The Rása Sports (H).	Ditto	Ditto ... ...
25	8	Sárasvat Gítá. Learned Disquisitions ...	Ratna Dás	Mahammadiá Bázár, Cuttack ...
26	9	Bheti Sokaharámani. Present of the Jewel that destroys Grief. (H).	Páresvar Senápati	Mahammadiá Bázár; Neáli; Cuttack ...
27	10	Rádhákrishnánurága Rasa Ratnákar Chautisá. Thirty-four Verses being the Depository of the Jewel of the Love of Rádhá and Krishna (H).	Achyutánanda Dás	Ditto ditto ...
28	16	Aratatrán Chautisá. Thirty-four Verses in honour of the Rescuer of the Distressed. (H).	Dína Krishna Dás	The Arunoday Press, Cuttack ...
29	25	Saríra Bhedbhajan. A Hymn about the True Knowledge of the Body. Part I. (H).	Kapilesvar Vidyábhúshan ...	Ditto ... ...
30	34	Ditto ditto (H). ...	.....	The Cuttack Printing Co.'s Press; Sekhbázár; Cuttack.
31	26	Trivenísvaranka Janán O Bhajan. Prayers to, and Hymns in honour of, the God Trivenísvar (Siva). (H).	Narasinha Charan Dás	The Darpanráj Press; Chaudhurí Bázár; Cuttack.
32	27	Sivastuti. Prayers to God Siva (H). ...	Gauránga Mahápátra	Mahammadiá Bázár, Cuttack ...
33	30	Lákhabindhá. The Shooting of the Mark. (H).	Bhágírathí Sáthiyá	The Arunoday Press; Alamchánd Bázár; Cuttack.
34	31	Mahírávan Badh. Slaying of Mahírávan (the name of a demon). (H).	Janárdan Pandá	The Arunoday Press; Mánasingpatna; Cuttack.
35	32	Rámáyana Antargata Mahírávan Yuddha. The War with Mahiravan (the name of a demon) as embodied in the Rámáyana. (H).	Bhágírathí Sáthiyá	The Cuttack Printing Co.'s Press, Cuttack
36	38	Berhábulá O Berhá Parikramá. Going within and Going round the Wall. (H).	Mahesvar Nanda	The Darpan Ráj Press; Darghábázár; Cuttack.
37	43	Dhavalesvara Janán. Prayers to Dhavaleavara (Siva). (H).	Kapilesvar Nanda	The Arunoday Press; Bálubazar; Cuttack.
38	47	Srímadbhágavat. Book of the Lord. 6th Canto (R). (H).	Jagannáth Dás	The Orissa Patriot Press; Mahammadiá Bázár; Cuttack.
39	49	Bhakti-Sangít. Devotional Songs. (H). ...	Bhágírathí Sáthiyá	The Cuttack Printing Co.'s Press, Cuttack.
40	50	Ratna Málíká Vá Bhágavata Varnaná. Garland of Jewels, or a Description of the Bhágavata. (H).	Krishna Dás	Cuttack ... ...
41	51	Dhruva Charitra. The Life of Dhruva. (T.) (H).	Hari Prasád Dás	Ditto ... ...
42	54	Kátara Chautisá O Krishna Bhajan. Thirty-four verses (in honour of God Krishna) by one Distressed and the Worship of Krishna. (H).	Syám Sundar Chakravartí ...	The Arunoday Press; Kendrápará; Cuttack.
43	5	Srímadbhagavadgítá. The Divine Lay. 1st and 2nd Chapters. (T.) (H).	Rudra Náráyan Sharangí ...	The De's Utkal Press; 2 Manikhám Street, Barabáti; Balasore.
44	53	Ditto ditto. 3rd and 4th Chapters. (T.) (H).	Ditto	The Utkal Sáhitya Press, Bálubázár; Nílagiri; Cuttack.
		SCIENCE (MATHEMATICAL).		
		Educational—		
45	19	Panakiá Parichay. An Introduction to the Arithmetical Tables.	Agani Raut	The Utkal Sáhitya Press, Bálubázár; Chhatrabázár; Cuttack.
46	17	Anka Pustak. Arithmetic. Part I ...	Madhusúdan Ráo and Madhusúdan Dás.	The Orissa Mission Press, Cuttack ...
47	1	Utkal Pátíganit. Uriya Arithmetic. Part I	Umes Chandra Basu	The Arunoday Press; College Lane; Cuttack.
48	2	Ditto ditto. Part II ...	Ditto	Ditto ditto ...
49	4	Sahaj Parimiti O Vyavahárik Jyámiti. Easy Mensuration and Practical Geometry. (*For Middle Vernacular classes.*)	Ditto	The Utkal Sáhitya Press; Bálubázár; College Lane; Cuttack.
50	5	Ditto ditto. (*For Upper Primary classes.*)	Ditto	Ditto ditto ...
		BI-LINGUAL BOOKS.		
		I.—BENGALI AND ENGLISH BOOKS.		
		BIOGRAPHY.		
1	34	Dáktár Sriyukta Nisikánta Chattopádhyáyer Samkshipta Jívaní. A Short Life of Dr. Nisikánta Chatterji.	Nava Kánta Chatterji	The Genderiyá Press, Dacca ... ...
		LANGUAGE.		
2	6	Amply Illustrated, Syllabically Divided, and Pronouncing Dictionary.	P. L. Náth	35, Bároyárítalá Road; 5, Latáfat Hosen's Lane, Beliághátá, Calcutta.
3	1822	Beginner's Dictionary of English Words, Phrases, and Idioms done into Bengali.	Beulmádhav Gánguli	6, College Street Bye-Lane; 57-1, College Street; Calcutta.

First Quarter ending 31st March 1902—continued.

6	7	8	9	10	11	12	13
Name or firm of printer and of publisher.	Date of issue from the press or of the publication.	Size and number of sheet, leaves, or pages.	Number of edition and number of copies of which the edition consists.	Printed or Litho'd.	Price at which the book is sold to the public.	Name and residence of the proprietor of copyright, or any part of it.	Copyright registered or not.
	1902.				Rs. A. P.		
R. J. Grundy	Jan. 29	Dy. 12mo; 252	1st; 1,000	P.	.....	W. Ahrens, Jájpur, Vizag.	
Madhusúdan Jáná	Feb. 4	Rl. 18mo; 16	1st; 500	P.	0 0 6	Madhu Súdan Jáná, Contai.	
Ditto	„ 25	Dy. 8vo; 25	6th; 1,000	P.	0 1 0	Ditto.	
	1901.						
Madan Mohan Náyak; Ananda Chandra Misra.	Dec. 21	Dy. 12mo; 206	1st; 1,000	P.	0 12 0	The publisher, Mahammadiá Bázár, Cuttack.	
Madan Mohan Náyak; the author	„ 24	Dy. 12mo; 11	1st; 1,000	P.	0 1 0	The author, Neáli, Cuttack.	
Madan Mohan Náyak; Chintámani Praharáj.	„ 27	Dy. 16mo; 8	1st; 1,000	P.	0 0 9	Chintámani Praharáj, Neali, Cuttack.	
	1902.						
Bhágavat Prasád Dán; Abhinna Chandra Dán.	Feb. 3	Dy. 12mo; 8	5th; 1,000	P.	0 0 9	Abhinna Chandra Dán, Dewán Bázár, Cuttack.	
Bhágavat Prasád Dán; Lálá Atmánáráyan, Kapil De, and Nityánanda Sáhu.	„ 5	Dy. 12mo; 12	5th; 1,000	P.	0 1 3	The publishers, Chaudhurí Bázár, Cuttack.	
The Cuttack Printing Co., Ld.; Dámodara Sámantara.	„ 21	Dy. 12mo; 24	1st; 1,000	P.	0 1 6	Dámodar Sámantara, Sekhbázár, Cuttack.	
Adam Samuel; Madan Sundar Dás	„ 5	Rl. 32mo; 5	1st; 1,000	P.	0 0 3	Madan Sundar Dás, Chaudhurí Bázár, Cuttack.	
Madan Mohan Náyak; Maheswar Misra, and Gauránga Mahápátra.	Jan. 7	Rl. 32mo; 6	1st; 1,000	P.	0 0 3	Gauránga Mahápátra, Cuttack.	
Bhágavat Prasád Dán; Bhágirathí Sáthiyá.	Feb. 24	F'cap. 8vo; 26	5th; 1,000	P.	0 2 0	The author, Alam Chánd Bázár, Cuttack.	
Bhágavat Prasád Dán; Kásináth Pandá and others.	„ 24	Dy. 12mo; 20	1st; 1,000	P.	0 1 0	The publishers, Manasingpatna, Cuttack.	
The Cuttack Printing Co., Ld.; Dámodar Sámantara.	„ 21	Dy. 12mo; 18	1st; 1,000	P.	0 1 6	The author, Alam Chánd Bázár, Cuttack.	
Adam Samuel; Maheswar Nanda ...	„ 26	Dy. 12mo; 9	1st; 1,000	P.	0 1 0	The author, Darghá Bázár, Cuttack.	
Bhágavat Prasád Dán	Mar. 6	Dy. 16mo; 9	2nd; 1,000	P.	0 0 6	Bhágavat Prasád Dán, Cuttack.	
M. M. Náyak; Dhananjay Bancrji	...	Dy. 12mo; 90	1st; 1,000	P.	0 4 0	The publisher, Mahammadia Bazar, Cuttack.	
Cuttack Printing Co., Ld, ...	Feb. 4	F'cap 8vo; 16	1st; 1,000	P.	0 1 0	The author, Alamchánd Bázár, Cuttack.	
Visvanáth Kar; Brahmánanda Sharangí, and Srínidhi Mahápátra.	Mar. 7	Rl. 32mo; 31	1st; 1,000	P.	0 1 0	The publishers, Cuttack.	
Visvanáth Kar	„ 7	Dy. 12mo; 36	1st; 1,000	P.	0 2 0	The author, Balasore.	
Bhágavat Prasád Dán; Ghanasyám Sáhu.	„ 14	F'cap 8vo; 6	1st; 1,000	P.	0 0 9	The publisher, Kendrápára, Cuttack.	
Kálíprasád Dás; Rudra Náráyan Sharangí.	Feb. 25	Dy. 12mo; 42	1st; 1,000	P.	0 2 6	The author, Barabati, Balasore.	
V. Kar; Rudra Náráyan Sharangí	Mar. 12	Dy. 12mo; 42	1st; 500	P.	0 2 6	The author, Nílagiri, Cuttack.	
V. Kar; Agani Raut	Feb. 5	Dy. 12mo; 34	1st; 1,000	P.	0 3 0	Agani Raut, Chhatrábázár, Cuttack.	
Rev. R. J. Grundy	Jan. 25	Dy. 12mo; 105	1st; 1,000	P.	0 4 0	The authors, Cuttack.	
	1901.						
Bhágavat Prasád Dán; Umes Chandra Basu.	Dec. 3	Dy. 12mo; 114	1st; 1,000	P.	0 4 0	The author, College Lane, Cuttack.	
Ditto ditto ...	„ 30	Dy. 12mo; 208	1st; 1,000	P.	0 8 0	Ditto ditto.	
V. Kar; Umes Chandra Basu ...	„ 24	Dy. 12mo; 44	1st; 25	P.	0 2 0	Ditto ditto.	
Ditto ditto ...	„ 24	Dy. 12mo; 54	1st; 975	P.	0 4 0	Ditto ditto.	
	1902.						
Bhánu Chandra Dás; Hari Prasanna Mukherji.	Jan. 10	Dy. 12mo; 119	1st; 300	P.	0 5 0	.....	
K. P. Baideya; the author ...	Feb. 10	Dy. 8vo; 801	1st; 910	P.	2 8 0	P. L. Náth, 5, Lutafat Hosen's Lane, Bebágháta, Calcutta.	
	1901.						
Nanda Lál Chatterji; A. K. Ráy and Co,	Oct. 25	Cr. 8vo; 881	3rd; 3,000	P.	2 0 0	The author, Head Master, South Suburban School, Bhawanipur.	

1	2	3	4	5
Serial number.	Registration number.	Title, with in English translation of the same when not in that lan uage, the language of the book, and the subject.	Name of author, translator, or editor of the book, or any part of it.	Place of printing and publication.
		I.—BENGALI AND ENGLISH BOOKS—concld.		
		LANGUAGE—*concld.*		
		Educational—		
4	1714	Helps to Conjugation and Parsing ...	Dváraká Náth Chaudhurí ...	98, Harrison Road, Calcutta ...
5	1729	Boy's First Word-Book, with Lessons on Composition.	N. R. Mukherji	40, Nayán Chánd Datta's Street; 30, Cornwallis Street; Calcutta.
6	1734	The Beginner's Translation on a new method.	A. C. Banerji	8, College Square; 64, College Street; Calcutta.
7	1855	A Bengali-English Word-Book ...	Syámá Charan Gánguli	40, Bechu Chatterji's Street; 25, Cornwallis Street; Calcutta.
8	174	A Complete Key to the English Entrance Course for 1903.	Rasamay Mitra	203-2; 25; Cornwallis Street, Calcutta...
9	132	Examples and Exercises in Translation ...	F. J. Rowe and Nila Kantha Majumdár.	64, Akhil Mistri's Lane, Calcutta ...
10	137	A Primer of Words and of Grammar ...	Kunja Vihárí Basu	Ditto ditto ...
11	6	The Beginner's Lessons on Words, Phrases, and Sentences, with Easy Exercises in Translation.	Veni Mádhav Gánguli and Visvesvar Chakravarti.	The New Town Press, Bhawanipur; 57-1, College Street, Calcutta.
12	22 23	A Complete Key to Lily Soward's National English Reader. First Book.	B. Dás Gupta	The Genderiyá Press, Dacca ... ...
13	61	A Comprehensive Key to Simple English Reader.	Ananda Chandra Nandí	The Ashutosh Press, Dacca ... ...
14	63	Middle Class English Composition ...	Vrindávan Dhar	Ditto ... ...
15	67	A Complete Key to Junior English Reader	Basu and Bhattácháryya	Ditto ... ...
16	70	A Complete Key to Model Selections. Part I.	Satya Bhúshan Datta	The Isán Press, Dacca ... ...
17	75	A Key to the Model English Reader. Part I.	Sarat Chandra Sen	The Genderiyá Press, Dacca ... ...
18	76	Ditto ditto. Part I	Upendra Lál Dás Gupta	Ditto ... ...
19	78	A Complete Key to Moral Lessons ...	H. Sen	The Genderiya Press, Dacca; 48-1, Harrison Road, Calcutta.
20	81	Model Key to English Readings. Part I	.....	The Bángálá Press, Dacca ... ...
21	86	A Key to the Model Reader	B. Bandyopádhyáy and S. Mukherji	The Raghu Náth Press; Jagannáth College; Dacca.
		RELIGION.		
22	15	Báibel Dharmer Gupta Kathá. "Myster'es of the Bible." (A. S).	Kárttik Chandra Gupta	The Aryyavartta Press, 62, Sambhu Chandra Pandit's Street, Bhawanipur.
23	17	Báibel Dharmer Gupta Káhiní. Mysteries of the Bible. (A. S).	Ditto	Ditto ditto
		II.—BENGALI AND PALI BOOKS.		
		RELIGION.		
1	8	Sramana Karttavya, Málabatthu O Pretamoksha. Duties of a Sramana, the Story of Málabhikshu and the Liberation of a Ghost. (Bud).	Ráma Chandra Baruá	The Sanántan Press, Chittagong ...
		III.—BENGALI AND SANSKRIT BOOKS.		
		LANGUAGE.		
1	1748	Siddhánta Sandípaní. The Lamp of Conclusions.	Basanta Kumár Ráy	119, Old Baitakkhána Bázár Road, Calcutta.
		Educational—		
2	11	Vyákaranamayúkha. Rays of Grammar...	Karunákánta Sen Gupta	The Isán Press, Dacca ... ...
3	12	Ditto ditto ...	Ditto	Ditto ... ...
4	73	Sanskrita Padamanjarír Vyákhyá. A Key to Sanskrit Padamanjari.	Vipín Vihárí Gangopádhyáy ...	The Náráyan Press, Dacca ... ...
		MEDICINE.		
5	1900	Nádí Prakásh Vá Sánuvád Nádí Vijnánam. Exposition of (the nature) of the Pulse or the Knowledge of the Pulse with Translation. (T). (N).	Kálíprasanna Kavisekhar ...	127, Masjidbári Street; 98-3, Upper Chitpur Road; Calcutta.
6	1902	Saral Dravyaguna Darpanam. An Easy Mirror of the Properties of Drugs. (N).	Ditto	127, Masjidbarí Street; 98-1, Upper Chitpur Road; Calcutta.
7	1903	Ratna Prabhá. Lustre of a Jewel. (T). (N).	Ditto	127, Masjidbári Street, Calcutta ...
		MISCELLANEOUS.		
8	29	Aryya Káyasthavarnapaarichaya. Knowledge of the Aryan Káyastha Caste.	Ráj Mohan Basu	The R. D. S. N. Press, Náráyanganj, Dacca.
9	106	Káyastha Tattva Vichár. Discussion of Truths relating to the Káyastha Caste.	Hemanta Kumár Vidyábhúshan ...	34, Musalmánpárá Lane; 183, Mániktalá Street; Calcutta.
10	110	Ugra Kshatriya Tattva. Truths about the Ugra Kshatriya Caste.	Hari Charan Bandhu	133, Masjidbári Street, Calcutta ...
11	1792	Viváha O Nári Dharmma. Marriage and the Duties of a Woman.	Nilakantha Majumdár	64, Akhil Mistrí's Lane, Calcutta ...
12	1836	Suddhi Dípiká. Lamp of Purification. (T).	Edited by Chandícharan Smritibhúshan.	133, Masjidbári Street; 11-1, Garánhátá Street; Calcutta.
13	1884	Adrishta Darsan Vá Saubhágya Paríkshá. Seeing the Unseen or the Examination of Luck.	Basák and Sons	127, Masjidbári Street, Calcutta ...

First Quarter ending 31st March 1902—continued.

6	7	8	9	10	11	11	13
Name or firm printer and of publisher.	Date of issue from the press or of the publication.	Size and number of sheets, leaves, or pages.	Number of edition and number of copies of which the edition consists.	Printed or litho'd.	Price at which the book is sold to the public.	Name and residence of the proprietor of copyright, or any part of it.	Copyright registered or not.
	1901.				R. A. P.		
Ráma Náráyan Dhar	Oct. 18	Cr. 8vo; 111	1st; 1,000	P.	0 5 0	The author, Goálpárá High School, Goálpárá.	
Hari Charan Dás; the Sanskrit Press Depository.	„ 28	D.cr. 16mo; 72	5th; 4,000	P.	0 3 0	The author, Uttarpárá, Serampur.	
Tulasí Charan Dás; the City Book Society.	„ 26	F'cap 8vo; 64	1st; 1,000	P.	0 2 0	A. C. Banerji, 64, College Street, Calcutta.	
R. Datta; B. Banerji and Co. ...	Dec. 10	Dy. 12mo; 74	2nd; 10,000	P.	0 4 0	The author.	
	1902.						
P. C. Sáhá; B. Banerji and Co. ...	Jan. 15	Cr. 8vo; 400	1st; 1,300	P.	2 0 0	The author, 25, Cornwallis Street, Calcutta.	
Hari Dás Ghosh; Kedár Nath Basu.	„ 22	Cr. 8vo; 339	1st; 2,000	P.	1 8 0	The publisher, 64, Akhil Mistri's Lane, Calcutta.	
Ditto ditto	„ 2	Cr. 8vo; 80	1st; 1,000	P.	0 4 0	Ditto ditto.	
Manmatha Nath Mitra; A. K. Ráy and Co.	„ 12	Cr. 8vo; 101	2nd; 5,000	P.	0 4 0	The authors, Nadia.	
Bhánu Chandra Dás; Hirá Lál Mukherji.	„ 30	Dy. 12mo; 86	1st; 1,000	P.	0 6 0	.....	
Revatí Mohan Dás; Harirám Dhar	Feb. 6	Dy. 12mo; 402	1st; 3,000	P.	1 4 0	.....	
Ditto ditto	„ 8	Dy. 12mo; 96	17th; 1,000	P.	0 6 0	.....	
Ditto ditto	„ 20	Dy. 12mo; 518	2nd; 2,000	P.	1 6 0	.....	
Mathurá Nath De	„ 22	Dy. 12mo; 120	1st; 750	P.	1 4 0	.....	
Bhánu Chandra Dás; Jagadís Chandra Sen.	„ 2	Dy. 12mo; 48	1st; 1,000	P.	0 8 0	.....	
Bhánu Chandra Dás; the author	„ 14	Dy. 12mo; 72	1st; 1,000	P.	0 10 0	.....	
Bhánu Chandra Dás; J. M. Son ...	„ 14	Dy. 12mo; 272	3rd; 2,200	P.	0 12 0	.....	
Madan Mohan Básák; Hari Rám Dhar.	„ 10	Dy. 12mo; 84	1st; 1,000	P.	1 6 0	.....	
Munsi Kalimuddin; Hari Dás Basák	„ 20	Dy. 12mo; 107	1st; 1,000	P.	0 12 0	.....	
Gorá Chánd Chakravartí; Kárttik Chandra Gupta.	„ 26	Dy. 8vo; 8	1st; 4,000	P.	.....	The publisher, 8, Arpuly Lane, Calcutta.	
Ditto ditto	„ 26	Dy. 8vo; 8	1st; 2,500	P.	.....	Ditto ditto.	
B. Chandhurí	Jan. 25	Dy. 12mo; 52	1st; 1,000	P.	0 2 0	The author.	
	1901.						
J. N. Banerji and Sons	Oct. 31	Dy. 12mo; 179	1st; 1,000	P.	0 14 0	Ditto.	
Mathurá Náth De	Dec. 18	Dy. 12mo; 80	2nd; 1,700	P.	0 8 0	.....	
Ditto	„ 18	Dy. 12mo; 120	1st; 1,700	P.	0 8 0	.....	
	1902.						
Lachhman Basák; Harí Rám Dhar.	Feb. 19	Dy. 12mo; 178	2nd; 1,000	P.	0 12 0	.....	
	1901.						
Dínanáth Mánná; Vaishnav Charan Basák.	Dec. 2	Dy. 12mo; 35	1st; 1,000	P.	0 4 0	The publisher, 127, Masjidbárí Street, Calcutta.	
Ditto ditto	Nov. 28	Rl. 12mo; 82	1st; 1,000	P.	0 6 0	Ditto ditto.	
Dinanáth Mánná; Basák and Sons	Dec. 10	Rl. 12mo; 268	1st; 1,000	P.	2 0 0	Basák and Sons, 127, Masjidbárí Street, Calcutta.	
Prabhát Chandra Datta; the author	...	Dy. 8vo; 42	1st ...	P.	.....	.....	
Kálí Náráyan Basu; Harihar Prasád Ráy.	Dec. 26	Dy. 12mo; 40	1st; 3,000	P.	0 6 0	.....	
	1902.						
Yogendra Náth Chakravartí; the author.	Jan. 22	Dy. 8vo; 16	1st; 500	P.	.....	The author, Báluchar, Jeyáganj, Murshidabad.	
	1901.						
H. D. Ghosh; Kedár Náth Basu ...	Oct. 28	D. fc. 16mo; 306	1st; 1,000	P.	1 0 0	Kedár Náth Basu, 28-4, Akhil Mistrí's Lane, Calcutta.	
Yogendra Náth Chakravartí; the author.	Dec. 5	Dy. 8vo; 293	2nd; 500	P.	2 8 0	The editor, 11-1, Garánhátá Street, Calcutta.	
Dínanáth Mánná; the author ...	„ 1	Dy. 12mo; 31	2nd; 1,000	P.	0 4 0	The publisher.	

1 Serial number.	2 Registration number.	3 Title with an English translation of the same when not in that language, the language of the book, and the subject.	4 Name of author, translator, or editor of the book, or any part of it.	5 Place of printing and publication.
		III.—BENGALI AND SANSKRIT BOOKS—concld.		
		POETRY.		
14	12	Mohamudgarah. The Destroyer of Illusion. (T).	Syámá Charan Kaviratna ...	2, Goábágán Street; 201, Cornwallis Street; Calcutta.
		RELIGION.		
15	1749	Srímat Kavi Jaydeva Virachita Srí Srí Gíta Govinda. Verses in honour of Govinda (Sri Krishna) by Poet Jayadeva. (T.) (H).	Edited by Prasanna Kumár Sástrí ...	160-1, Masjidbárí Street; 34, Nayán Chánd Datta's Street; Calcutta.
16	1713	Atha Harivásara Paddhati. Ritual for the Vow of Hari Vásara. (T). (H).	Ságar Chandra Kaviratna ...	98, Harrison Road, Calcutta; Nandapur, Midnápur.
17	58	Mukunda Muktávalí O Chátupushpánjalí. A Collection of Pearls (of hymns) in honour of Mukunda (Krishna) and A Palmful of Flowers of Graceful Discourse (in honour of Rádhá and Krishna). (T). (H).	Kálípada Vidyáratna	99, Ahírítolá Street, Calcutta ...
18	1718	Vratamálá. A Garland of Vows (T). (H)....	Nanda Kumár Kaviratna Bhattácháryya.	Ditto ditto ...
19	1719	Srí Srí Satya Náráyaner Pánchálí. Metrical Recitation in honour of the God Satya Náráyana. (T). (H).	Váni Chandra Bhattácháryya ...	Ditto ditto ...
20	1750	Guru Gítá. Discourse about the Spiritual Guide. (T). (H).	Prasanna Kumár Sástrí Bhattácháryya.	160-1, Masjidbárí Street; 34, Nayán Chánd Datta's Street; Calcutta.
21	1751	Sánuváda Srímadbhagavatígítá. Lays about the Goddess Durgá with Translation. (T). (H).	Ditto ditto ...	Ditto ditto ...
22	1776	Hindu Sarvasva. The Entire Wealth of the Hindus. (T). (H).	Kálíprasanna Vidyáratna and Upendra Náth Mukherji.	115-2, Grey Street; 201, Cornwallis Street; Calcutta.
23	1843	Hindur Tírtha. Places of Pilgrimage for the Hindus (T). (H).		38-2, Bhaváni Charan Datta's Street, Calcutta.
24	1891	Sánuváda Satíka Srí Srí Gíta Govindam. Verses in honour of Govinda (Krishna) with Text and a Translation. (T). (H).	Dínabandhu Sen	127, Masjidbárí Street, Calcutta ...
25	24	Vásishtha Mahárámáyanam. The Great Rámáyana by Vasishtha. No. 69. (T). (H).	Kálívar Vedántavágís	214, Bowbázár Street, Calcutta ...
26	37	Srímadbhagavadgítá. The Divine Lay (T). (H).	Bhudhar Chatterji	24, Beadon Street; 70, Sukea's Street; Calcutta.
27	86	Srí Chaitanya Chandrámritam. The Nectar of the Moon of Chaitanya. (T). (H).	Syám Lal Gosvámí	2, Ananda Chatterji's Lane, Calcutta ...
28	153	Sarvasiddhi Pradáyiní Mahásakti Tantra. The Tantra in honour of the Great Sakti, which is the Giver of all Kinds of Prosperity. (T). (H).	Bhava Sankar Tantra Visárad ...	61, Ahírítolá Street, Calcutta; Dum-Dum, 24-Parganas.
29	1	Padma Puránam. The Name of a Puráns. Uttara Khandam. Vol. II. No. 9. (T). (H).	Ráma Náráyan Vidyáratna ...	The Rádháraman Press, Berhampur ...
30	13	Rágamayí Kaná. Particles full of Devotion. (T). (H).	Hárádhan Dás	The Váni Press, Rájsáhi; Kánsát, Maldah.
31	2	Srí Srí Rádhá Krishna Padánka Tattvam. Truths about the Foot-prints of Rádhá and Krishna. (T). (H).	Golak Chandra Gosvámí ...	The Chárn Press, Mymensingh ...
32	5	Srímadbhágavatam. Book of the Lord. Parts 66 and 67 (together) (T). (H).	Edited by Khagendra Náth Sástrí ...	The New Town Press, Bhawanipur ...
33	13	Ditto ditto. Parts 68 to 70 (together). (T). (H).	Ditto ditto ...	Ditto ditto ...
34	20	Ditto ditto. Parts 71 to 73 (together). (T). (H).	Ditto ditto ...	Ditto ditto ...
35	50	Guru O Sishya. Preceptor and Pupil (H) ...	Harakumár Mukherji	The Gopínáth Press, Dacca ... ...
		IV.—ENGLISH AND HINDI BOOKS.		
		LANGUAGE.		
		Educational—		
1	4	A Hindi-English Word-Book for Beginners with Lessons in Spelling and Dictation.	Maulaví Khán Mahammad and Bakshi Narsinha Náráyan.	The New Town Press, Bhawanipur
		V.—ENGLISH AND SANSKRIT BOOKS.		
		LANGUAGE.		
		Educational—		
1	198	A Complete Summary of Sakuntalá. Part I	Krishna Lál Dás	4, Rájá Nava Krishna's Street; Calcutta; 15, Kásipur Road, 24-Parganas.
		RELIGION.		
2	1	The Teachings of the Bhagavat Gítá ...	Ráma Sadan Bhattácháryya ...	The Midnapur City Press, Midnapur ...

First Quarter ending 31st March 1902—continued.

6	7	8	9	10	11	12	13
Name or firm of printer and of publisher.	Date of issue from the press or of the publication.	Size and number of sheets, leaves, or pages.	Number of edition and number of copies of which the edition consists.	Printed or Litho'd.	Price at which the book is sold to the public.	Name and residence of the proprietor of copyright, or any part of it.	Copyright registered or not.
	1901				Rs. A. P.		
Kunja Vihárí Dás; Gurudás Chatterji.	Dec. 8	D. fc. 16mo; 13	1st; 1,000	P.	0 2 0	The publisher, 201, Cornwallis Street, Calcutta.	
Visvesvar Chakravarti	Nov. 2	Dy. 12mo; 170	1st; 1,000	P.	0 8 0	The editor, 34, Nayán Chánd Datta's Street, Calcutta.	
Kunja Vihárí De; Vaikuntha Náth Khánrá.	Oct. 31	Dy. 12mo; 101	1st; 1,000	P.	0 5 0	Ságar Chandra Kaviratna, Midnápur.	
	1902.						
Nritya Lál Síl	Jan. 1	Rl. 12mo; 20	New; 1,500	P.	0 1 0	Nritya Lál Síl, 99, Ahírítolá Street, Calcutta.	
	1901.						
Ditto	Oct. 25	... 384	New; 2,000	P.	0 8 0	Ditto ditto.	
Ditto	„ 10	... 12	New; 1,000	P.	0 1 0	Ditto ditto.	
Visvesvar Chakravartí; the translator.	Nov. 4	Dy. 12mo; 35	1st; 1,000	P.	0 2 0	The translator, 34, Nayán Chánd Datta's Street, Calcutta.	
Ditto ditto ...	„ 10	Dy. 12mo; 50	1st; 1,000	P.	0 2 0	Ditto ditto.	
P. C. Mukherji; Gurudás Chatterji.	„ 22	Dy. 12mo; 392	4th; 3,000	P.	2 0 0	Upendra Nath Mukherji, 115-2, Grey Street, Calcutta.	
Arunoday Ráy	Dec. 1	Dy. 8vo; 72	1st; 20,000	P.	0 6 0	The Vangavásí Firm, 38-2, Bhavání Charan Datta's Lane, Calcutta.	
Dínanáth Mánná; Basák and Sons	„ 4	Rl. 32mo; 390	1st; 390	P.	0 6 0	.....	
Asutosh Gaṇ; Nanda Lál Pál ...	Nov. 30	Dy. 8vo; 48	1st; 1,000	P.	0 6 0	The publisher, 214, Bowbázár Street, Calcutta.	
P. C. Mukherji and Sons; Navakumár Chatterji.	Dec. 10	Rl. 32mo; 166	4th; 2,000	P.	0 5 0	.....	
Kesav Lál Ráy	„ 28	Dy. 8vo; 94	1st; 500	P.	0 8 0	Sisir Kumár Ghosh, 2, Ananda Chatterji's Lane, Calcutta.	
	1902.						
Priya Náth Ghosh; the translator	Jan. 12	Dy. 12mo; 132	2nd; 800	P.	1 0 0	The translator, Dum-Dum 24-Parganas.	
Rádhá Ballabh Nandí; the translator.	„ 2	Dy. 4 to; 40	1st; 1,000	P.	0 12 0	Ráma Náráyan Vidyáratna, Berhampur.	
Sarat Chandra Chaudhurí; Hárádhan Dás.	„ 20	Rl. 12mo; 24	2nd; 1,000	P.	.....	Hárádhan Dás; Kánsát, Maldah.	
Amiruddin Ahmed; Umákánta Sarmá.	„ 28	Dy. 12mo; 21	2nd; 500	P.	0 2 0	.....	
Manmatha Náth Mitra; the editor	„ 2	Rl. 8vo; 64	1st; 1,000	P.	0 4 0	The editor, 37, Balarám Basu's Ghát Road, Bhawanipur, Calcutta.	
Ditto ditto ...	Feb. 3	Rl. 8vo; 96	1st; 1,000	P.	0 6 0	Ditto ditto.	
Ditto ditto ...	Mar. 3	Rl. 8vo; 96	1st; 1,000	P.	0 6 0	Ditto ditto.	
Gopínáth Basák; the Nágarbhág Harisabhá.	Jan. 25	Dy. 12mo; 118	1st; 1,000	P.	0 8 0	.....	
	1901.						
Manmatha Náth Mitra; S. K. Láhirí and Co.	Dec. 26	D.cr. 16mo; 104	1st; 1,000	P.	0 5 0	Manmatha Náth Mitra, 10, Padma Pukur Road, Bhawanipur.	
	1902.						
Upendra Náth Mandal; the author	Jan. 22	Dy. 8vo; 39	1st; 1,000	P.	0 8 0	Krishna Lál Dás, 15, Kásipur Road, 24-Parganas.	
Randal Jáná	Mar. 1	Dy. 8vo; 56	2nd; 500	P.	0 4 0	The author, Deputy Collector and Deputy Magistrate, Bankurá.	

1	2	3	4	5
Serial number.	Registration number.	Title with an English translation of the same when not in that language, the language of the book, and the subject.	Name of author, translator, or editor of the book, or any part of it.	Place of printing and publication.
		VI.—ENGLISH AND URDU BOOKS.		
		LANGUAGE.		
		Educational—		
1	3	An Urdu-English Word-Book for beginners, with lessons in Spelling and Dictation.	Maulví Khán Mahammad and Bakshi Narasinha Náráyan.	The New Town Press, Bhawanipur ...
		VII.—ENGLISH AND URIYA BOOKS.		
		LANGUAGE.		
		Educational—		
1	3	The Child's First Grammar	U. N. De	The De's Utkal Press, Cuttack ...
		VIII.—HINDI AND SANSKRIT BOOKS.		
		MISCELLANEOUS.		
1	1717	Hanumán Jyotish. Astrology as Expounded by Hanumán (the Monkey Chief). (T).	Srí Náth Láhá	99, Ahíritolá Street, Calcutta ...
		RELIGION.		
2	4	Trikuti Vilás. Exposition of the Eternal Religion. Vol. I. Chapters III and IV (together). (H).	Svámí Hansa Svarup	Muzaffarpur ... ...
3	70	Nitya Sandhyopásaná. Daily Religious Prayer. (T). (H).	Thákur Prasád Sarmá	The Bihárbandhu Press; Sultánganj Bankipur.
		IX.—SANSKRIT AND URIYA BOOKS.		
		MISCELLANEOUS.		
1	24	Kerala Bayális. Forty-two Slokas by Kerul (T.)	Keraláchárayya	The Arunoday Press, Cuttack ...
		POETRY.		
2	37	Slokaratnamálá. Garland of Jewels of Verse (T.)	... ..	Thè Ráy Press, Cuttack ... ...
		RELIGION.		
3	14	Payá Sráddha Vá Dípadána. Payá Sráddha or the Dedication of Lighted Lamps (to Gods and Saints). (H).	Purushottam Tarkálankar ...	The Utkal Sáhitya Press, Bálubázár, Cuttack.
4	14	Tíká Bhágavata Vá Bhagavata Sára. Abridged Bhágavat or the Essence of the Bhágavat. (H).	Madhusúdan Jáná	The Nihár Press, Contai ... ...
5	28	Srí Satya Náráyan Pálá. The Story of the God Satya Náráyan. (T). (H).	Bhágirathí Sothiyá	The Cuttack Printing Co's Press, Cuttack.
6	166	Kavachatrayam. Three Kavachas (A number of Protective Verses). (T.) (H).	Dámodar Kávyatírtha .	The Utkal Sáhitya Press, Cuttack ...
		TRI-LINGUAL BOOKS.		
		I.—ARABIC, MUSALMANI-BENGALI AND URDU BOOKS.		
		RELIGION.		
1	108	Meshá-hal-Eslám. Light of Islám (M.) ...	Munsí Fasihuddin	The Alomí Press, Churihátta; Gálimpur, Navávganj; Dacca.
		II.—BENGALI, ENGLISH, AND SANSKRIT BOOKS.		
		LANGUAGE.		
		Educational—		
1	66	Sanskrita Parichaya Vivriti. A Key to Sanskrita Parichaya. Part I.	Rajaní Kánta Amín and Bipin Víhárí Gángulí.	The Asutosh Press, Dacca ...
2	80	A Key to Sukha Pátham. Part I ...	.....	The Bángálá Press, Dacca ...
3	117	Linga Nirúpana. "The Determination of Genders."	Ráma Krishna Vidyábhúshan ...	1, Mahendra Gosvámi's Lane; New Indian School; Calcutta.
4	142	Upákhyánamálá Vivritih. A Key to Upákhyánamálá (Collection of Stories).	Mahendra Náth Vidyánidhi ...	2, Goábágán Street; 57, College Street; Calcutta.
5	143	Jnánadípiká Darpanah. A Key to Jnánadípiká.	Syámá Charan Kaviratna ...	Ditto ditto ...
6	1777	Sikshá Darpanah. A Mirror of Instruction. Part III.	Ditto .	Ditto ditto ...
7	1703	Pratham Bhág Sanskrita Parichaya Bodhiká. A Key to Sanskrita Parichaya, Part I.	Asutosh Dev	22-2, Jhamápukur Lane, Calcutta ...
8	1783	Megha Dútam. The Cloud Messenger (T.)	Edited by Bidhubhúshan Gosvámí ...	64, Akhil Mistri's Lane, Calcutta ...
9	1785	Kumára Sambhavam. Birth of the War-God. Cantos I—VII. (T.)	Edited by Krishna Kamal Bhattácháryya and Vidhubhúshan Gosvámí.	Ditto ditto ...

First Quarter ending 31st March 1902—continued.

6	7	8	9	10	11	12	13
Name or firm of printer and of publisher.	Date of issue from the press or of the publication.	Size and number of sheets, leaves, or pages.	Number of edition and number of copies of which the edition consists.	Printed or litho'd.	Price at which the book is sold to the public.	Name and residence of the proprietor of copyright, or any part of it.	Copyright registered or not.
Manmatha Nath Mitra; S. K. Láhirí and Co.	1901. Dec. 26	D.cr. 16mo; 108	1st; 1,100	P.	Rs. A. P. 0 5 0	Manmatha Náth Mitra.	
K. P. Dás; the author	Feb. 25	Dy. 12mo; 72	6th; 1,500	P.	0 4 0	.....	
Nritya Lál Síl	Oct. 15	Dy. 12mo; 112	New; 4,000	P.	0 2 0	The author, Báburám Ghosh's Lane, Calcutta.	
Devi Prasád	1902. Jan. 22	Dy. 12mo; 144	8th; 2,000	P.	0 6 0	.....	
Aklu Lál; Yodhan Prasad ...	1901. Dec. 25	Rl. 16mo; 32	1st; 2,000	P.	Nil	The publisher, Sultánganj, Bankipur.	
Bhágavat Prasád Dán; Chintámani Praharáj.	1902. Feb. 5	Dy. 12mo; 24	1st; 1,000	P.	0 2 0	Chintámani Praharáj, College Lane, Cuttack.	
S. B. Ráy; A. Satapathí ...	„ 14	D.fc. 16mo; 37	1st; 1,000	P.	0 2 0	The publisher, Hásnávád, Cuttack.	
Visvanath Kar	Jan. 21	F'cap 12mo; 12	1st; 1,000	P.	0 0 9	The author, Kázibázár, Cuttack.	
Madhusúdan Jáná	Feb. 25	Dy. 32mo; 32	1st; 1,000	P.	0 2 0	The author, Contai.	
Bhágírathí Sethiyá; the Cuttack Printing Company.	„ 11	Dy. 12mo; 39	1st; 1,000	P.	0 3 0	The author, Alamchándbázár, Cuttack.	
V. Kar	Dec. 21	Dy. 12mo; 39	1st; 500	P.	.....	The author, Kaniká.	
Hámidar Rahman; Muhammad Ismáil Khán.	Mar. 11	Rl. 8vo; 136	8th; 2,500	P.	1 0 0	.....	
Bhavatí Mohan Dás; the Asutosh Library.	Feb. 14	Dy. 12mo; 36	1st; 1,000	P.	0 14 0	.....	
Madan Mohan Basák; H. N. Dás ..	„ 2	Dy. 12mo; 60	1st; 1,000	P.	0 11 0	.....	
Naphar Chandra Sarkár; the author	Jan. 10	Dy. 12mo; 24	1st; 1,000	P.	0 2 0	The author, New Indian School, Calcutta.	
Kunja Víhárí Dás; Mánik Lál De	„ 15	Dy. 12mo; 166	1st; 1,000	P.	0 10 0	Mánik Lál De, 57, College Street, Calcutta.	
Ditto ditto .	„ 18	Dy. 12mo; 209	1st; 1,000	P.	0 12 0	Ditto ditto.	
Ditto ditto ..	1901. Oct. 28	Dy. 12mo; 324	1st; 1,000	P.	0 12 0	Ditto ditto.	
Baradá Prasád Majumdár; the author.	„ 28	Dy. 12mo; 151	1st; 1,000	P.	0 7 0	The printer, 22-2, Jhámápukur Lane, Calcutta.	
H. D. Ghosh; Kedár Náth Basu . .	Nov. 15	Cr. 8vo; 260	1st; 1,000	P.	2 4 0	The publisher, 28-4, Akhil Mistri's Lane, Calcutta.	
Ditto ditto ...	„ 10	Cr. 8vo; 698	1st; 1,000	P.	3 8 0	Ditto ditto.	

1	2	3	4	5
Serial number.	Registration number.	Title, with an English translation of the same when not in that language, the language of the book, and the subject.	Name of author, translator, or editor of the book, or any part of it.	Place of printing and publication.
		UNI-LINGUAL PERIODICALS.		
		I.—BENGALI PERIODICALS.		
		ART.		
1	1892	Álápiní. The Lute. A monthly paper. Vol. III. Nos. 5 and 6 (together).	Edited by Manomatadhan De ...	3, Ramá Náth Majumdár's Street, Calcutta.
2	1741	Sangíta Prakásiká. Expounder of Music. A monthly paper. Vol. I. No. 2.	Edited by Jyotirindra Náth Tagore	55, Upper Chitpur Road, Calcutta ...
3	1859	Ditto ditto. Vol. I. No. 3 ...	Ditto ditto ...	Ditto ditto ...
4	35	Ditto ditto. Vol. I. No. 4 ...	Ditto ditto ...	Ditto ditto ...
		MEDICINE.		
5	68	Bhishak-Darpan. Mirror for Physicians. A monthly paper. Vol. II. No. 11.	Edited by Dr. Káli Mohan Sen and Girís Chandra Bágchí.	25-1, Scott's Lane, Calcutta ...
6	130	Saral Homiopyáthi. Easy Homœopathy. A monthly paper. Vol. I. No. 10.	Edited by Vipin Viharí Chatterji and Nripendra Náth Seth.	29, Beadon Street; 83, Harrison Road; Calcutta.
7	131	Ditto ditto. Vol. I. No. 11 ...	Ditto ditto ...	Ditto ditto ...
		MISCELLANEOUS.		
8	1755	Antahpur. Inner Apartments. A monthly paper. 4th year. No. 7.	Edited by Srímatí Hemanta Kumarí Chaudhurí.	211; 208; Cornwallis Street, Calcutta...
9	1754	Ditto ditto. 4th year. No. 8 ...	Ditto ditto ...	Ditto ditto ...
10	19	Alochaná. Investigation. A monthly paper. 5th year. No. 6.	Edited by Yogíndra Náth Chatterji	336, Upper Chitpur Road, Calcutta; the Alochaná office, Howrah.
11	21	Ditto ditto. 5th year. No. 7 ...	Ditto ditto ...	Ditto ditto ...
12	156	Ditto ditto. 5th year. No. 8 ...	Ditto ditto ...	Ditto ditto ...
13	85	Aryya Gaurav. Aryan Glory. A monthly paper. Vol. I. No. 2.	Edited by Umes Chandra Basu ...	The Raghunáth Press, Máhuttuli; 26, Pánitolá; Dacca.
14	105	Bándhav. Friend. A monthly paper. Vol. I. No. 1.	Edited by Kálíprasanna Ghosh ...	The Girís Press, Dacca ... ..
15	1744	Chhátra. Student. A fortnightly paper. 3rd year. No. 1.	Edited by Ghanendra Náth Basu ...	6, Bhím Ghosh's Lane; 167, Mániktalá Street; Calcutta.
16	1744	Ditto ditto. 3rd year. No. 2	Ditto ditto ...	Ditto ditto ...
17	1744	Ditto ditto. 3rd year. No. 3	Ditto ditto ...	Ditto ditto ...
18	113	Ditto ditto. 3rd year. No. 6	.....	18, Hara Chandra Mallik's Lane; 166, Mániktalá Street; Calcutta.
19	114	Ditto ditto. 3rd year. No. 7	.....	Ditto ditto ...
20	115	Ditto ditto. 3rd year. No. 8	.....	Ditto ditto ...
21	116	Ditto ditto. 3rd year. No. 9	.....	Ditto ditto ...
22	20	Janma Bhúmi. The Land of Birth. A monthly paper. Vol. X. No. 4.	Edited by Jay Chandra Siddhánta Bhúshan.	336, Upper Chitpur Road; 39, Mámk Basu's Ghát Street; Calcutta.
23	157	Ditto ditto. Vol. X. No. 5...	Edited by Yatíndra Náth Datta and others.	Ditto ditto ...
24	186	Ditto ditto. Vol. X. No. 6...	Edited by Kshetra Mohan Sen Gupta	Ditto ditto ...
25	20	Jnána Dáyiní. Giver of Knowledge. A monthly paper. 1st year. No. 1.	Edited by Surendra Náth Gosvámí	The Pálpárá Hindu Satkarmamálá Press, Baráhanagar, 24-Parganas.
26	1861	Krishak. Cultivator. A monthly paper. Vol. I. No. 7.	Edited by Manmatha Náth Mitra ...	107, Cornwallis Street; 181, Upper Circular Road; Calcutta.
27	1861	Ditto ditto. Vol. I. No. 8 ...	Ditto ditto ...	Ditto ditto ...
28	1825	Mahájan Bandhu. "The Merchant's Friend." A monthly paper, 1st year. No. 7.	Edited by Rájkrishna Pál ...	66, Ahíritolá Street; 1, Chinipati, Bara-bazar; Calcutta.
29	1825	Ditto ditto. 1st year. No. 8...	Ditto ...	Ditto ditto ..
30	1761	Mahilá. Lady. A monthly paper. Vol. VI. No. 6.	Edited by Rev. G. C. Sen ...	8, Ramánáth Majumdár's Street, Calcutta.
31	1761	Ditto ditto. Vol. VII. No. 4	Ditto ...	Ditto ditto ...
32	1894	Ditto ditto. Vol. VII. No. 5	Ditto ...	Ditto ditto ...
33	1726	Mukul. Blossom. A monthly paper. Vol. VII. No. 5.	Edited by Sivanáth Sástrí ...	5, Siva Náráyan Das's Lane; 93-1, Upper Circular Road; Calcutta.
34	1862	Ditto ditto. Vol. VII. Nos. 6 and 7 (together).	Ditto ...	5, Siva Náráyan Dás's Lane; 208-2, Cornwallis Street; Calcutta.
35	148	Ditto ditto. Vol. VII. No. 8	Ditto ...	Ditto ditto ...
36	2864	Nava Prabhá. New Light. A monthly paper. Vol. I. Nos. 9 and 10 (together).	Edited by Jnánendra Lál Ráy and Harendra Lál Ráy.	25-1, Scott's Lane, Calcutta; 16, Chandra Náth Chatterji's Street, Bhawanipur.
37	70	Ditto ditto. Vol. I. Nos. 10 and 11 (together).	Ditto ditto ...	Ditto ditto ...
38	1788	Navya Bhárat. New India. A monthly paper. Vol. XIX. No. 8.	Edited by Devíprasanna Ráy Chaudhurí.	30-5, Madan Mitra's Lane; 210-4, Cornwallis Street; Calcutta.
39	96	Ditto ditto. Vol. XIX. Nos. 9 and 10 (together).	Ditto ditto ...	Ditto ditto ...

First Quarter ending 31st March 1902—continued.

6	7	8	9	10	11	12	13
Name or firm of printer and of publisher.	Date of issue from the press or of the publication.	Size and number of sheets, leaves, or pages.	Number of edition and number of copies of which the edition consists.	Printed or litho'd.	Price at which the book is sold to the public.	Name and residence of the proprietor of copyright, or any part of it.	Copyright registered or not.
	1901.				Rs. A. P.		
K. P. Náth	Dec. 18	Dy. 4to; 16	1st; 500	P.	2 0 0 Yearly.	The editor, 83, Upper Circular Road, Calcutta.	
Devendra Náth Bhattácháryya ...	Oct. 18	Dy. 4to; 12	1st; 1,000	P.	0 4 0	The editor, 19, Store Road, Báliganj, Calcutta.	
Ditto ...	Nov. ...	Dy. 4to; 12	1st; 500	P.	0 4 0	The editor, 6, Dváraká Náth Tagore's Lane, Calcutta.	
Ditto ...	Dec. 16	Dy. 4to; 12	1st; 500	P.	0 6 4	Ditto ditto.	
Sányál and Co.	„ 14	Rl. 8vo.; 44	1st; 400	P.	6 0 0 Yearly.	Girís Chandra Bágchí, Akhil Mistrí's Lane, Calcutta.	
St K. Shaw; King and Co. ...	„ 21	Dy. 8vo.; 24	1st; 500	P.	.....	.....	
Ditto ...	„ 21	Dy. 8vo.; 24	1st; 500	P.	.....	.....	
Kárttik Chandra Datta; Sasí Bhúshan Chakravarti.	Sept. 19	Rl. 8vo.; 24	1st; 1,500	P.	0 4 0	The publisher, 208, Cornwallis Street, Calcutta.	
Ditto ...	Sept. 24	Rl. 8vo.; 24	1st; 1,500	P.	0 4 0	Ditto ditto.	
Nílamani Dhar, Durgá Dás Chatterji.	Dec. 6	Dy. 8vo.; 24	1st; 250	P.	0 1 6	.....	
Ditto ditto ...	„ 6	Dy. 8vo.; 24	1st; 250	P.	0 1 6	.....	
	1902.						
Ditto ditto ...	Jan. 14	Dy. 8vo.; 24	1st; 250	P.	0 1 6	.....	
Munsi Kalimuddin; Vrajendra Náth Mitra.	Feb. 10	Dy. 8vo; 32	1st; 800	P.	0 3 0	.....	
Harihar Nandí	Mar. 17	Rl. 8vo; 48	1st; 1,500	P.	0 8 0	.....	
U. C. Basu and Co., Ghanendra Náth Basu.	Nov. 1	Dy. 8vo; 16	1st; 500	P.	0 1 0	.....	
Ditto ditto ...	„ 11	Dy. 8vo; 16	1st; 500	P.	0 1 0	.....	
Ditto ditto ...	„ 16	Dy. 8vo; 16	1st; 500	P.	0 1 0	.....	
Yogendra Chandra Basu; Ghanendra Náth Basu.	Jan. 2	Dy. 8vo; 16	1st; 1,000	P.	0 1 0	Satyendra Náth Mitra, 166, Mániktalá Street, Calcutta.	
Ditto ditto ...	„ 8	Dy. 8vo; 16	1st; 1,000	P.	0 1 0	Ditto ditto.	
Ditto ditto ...	„ 15	Dy. 8vo; 16	1st; 1,000	P.	0 1 0	Ditto ditto.	
Ditto ditto ...	„ 20	Dy. 8vo; 16	1st; 1,000	P.	0 1 0	Ditto ditto.	
	1901.						
Nílamani Dhar; Narendra Náth Datta.	Dec. 8	Dy. 8vo; 32	1st; 1,000	P.	0 2 6	.....	
Ditto ditto ...	„ 29	Dy. 8vo; 32	1st; 1,000	P.	0 2 6	.....	
	1902.						
Ditto ditto ...	Jan. 10	Dy. 8vo; 32	1st; 1,000	P.	0 2 6	.....	
Vinod Vihárí Dás	Feb. 1	Dy. 8vo; 16	1st; 500	P.	0 1 6	The editor, South Sinthi Sitalá-talá, Baráhanagar, 24-Parganas.	
	1901.						
Yadu Náth Sil; Sasí Bhúshan Mukherji.	Oct. ...	Cr. 4to; 24	1st; 500	P.	0 3 0	Manmatha Náth Mitra, 181, Upper Circular Road, Calcutta.	
Ditto ditto ...	Nov. ...	Cr. 4to; 24	1st; 500	P.	0 3 0	Ditto ditto.	
Rájendra Nath Sen; Satya Charan Pál.	Oct. 25	Dy. 8vo; 24	1st; 500	P.	0 2 0	Rájendra Náth Sen.	
Ditto ditto ...	„ 30	Dy. 8vo; 24	1st; 500	P.	0 2 0	Ditto.	
K. P. Náth	Jan. 13	Rl. 8vo; 24	1st; 850	P.	2 0 0 Yearly.	.....	
Ditto	Nov. 18	Rl. 8vo; 32	1st; 350	P.	.....	.....	
Ditto	Dec. 19	Rl. 8vo; 32	1st; 350	P.	.....	Brahma Mission Office, 3, Ramá Náth Majumdár's Street, Calcutta.	
Púrna Chandra Dás; Girís Chandra Naskar.	Sept. 28	Cr. 4to; 16	1st; 1,500	P.	1 8 0	The editor, 93-1, Upper Circular Road, Calcutta.	
Ditto ditto ...	Dec. 2	Cr. 4to; 32	1st; 1,000	P.	.....	The editor, 208-2, Cornwallis Street, Calcutta.	
Ditto ditto ...	„ 26	Cr. 4to; 16	1st; 1,000	P.	.....	Ditto ditto.	
Sányál and Co.; Ranendra Lál Ráy	„ 18	Dy. 8vo; 72	1st; 500	P.	0 6 0	Jnánendra Lál Ráy, 16, Chandra Náth Chatterji's Street, Bhawanipur.	
Ditto ditto ...	„ 21	Dy. 8vo; 72	1st; 500	P.	0 6 0	Ditto ditto.	
Bhút Náth Pálit; Devi Prasanna Ráy Chaudhurí.	„ 2	Rl. 8vo; 80	1st; 2,500	P.	0 10 0	The editor, 210-4, Cornwallis Street, Calcutta.	
	1902.						
Ditto ditto ...	Jan. 20	Rl. 8vo; 88	1st; 2,500	P.	0 10 0	Ditto ditto.	

1	2	3	4	5
Serial number.	Registration number.	Title, with an English translation of the same when not in that language, the language of the book, and the subject.	Name of author, translator, or editor of the book, or any part of it.	Place of printing and publication.
		I.—BENGALI PERIODICALS—contd.		
		MISCELLANEOUS—*contd.*		
40	105	Navya Vanga. New Bengal. A monthly paper. Vol. I. No. 5.	Edited by Pánch Kari Ráy and Asutosh Mukherji.	79-3-2-3, Cornwallis Street, Calcutta; 50, Basak's Street, Barahanagar, 24-Parganas.
41	19	Ditto ditto. Vol. I. No. 6 ...	Ditto ditto ...	Pálpárá, Baráhanagar, 24-Parganas ...
42	112	Nava Pratibhá. New Light. A monthly paper. Vol. I. No. 1.	Edited by Manoranjan Banerji ...	1, Charakdángá Street, Garden Reach, Calcutta.
43	1757	Nandan Kánan. The Forest of Paradise. A monthly paper. 1st year. Nos. 5 and 6 (together).	Edited by Dínendra Kumár Ráy ...	115-2, Grey Street, Calcutta...
44	1775	Ditto ditto. 1st year. Nos. 7 and 8 (together).	Ditto ditto ...	Ditto ... ...
45	1865	Nirmálya. Remains of an Offering to a Diety. A monthly paper. 4th year. No. 2.	Edited by Ramá Náth Chakravartí	25-1, Scott's Lane, Calcutta ... ...
46	1865	Ditto ditto. 4th year. No. 3 ...	Ditto ditto ...	Ditto ... ...
47	66	Ditto ditto. 4th year. No. 4...	Ditto ditto ...	Ditto ... ...
48	72	Pradípa. Lamp. A monthly paper. Vol. IV. No. 12.	Edited by Vaikuntha Náth Dás ...	25-1, Scott's Lane; 208-2, Cornwallis Street; Calcutta.
49	164	Prakriti. Nature. A monthly paper. 2nd year. No. 8.	Edited by Amúlya Charan Sen ...	17, Madan Mitra's Lane; 9, Kedár Náth Datta's Lane; Calcutta.
50	1857	Panthá. Path. A monthly paper. Vol. V. Nos. 6 and 7 (together).	Edited by Hírendra Náth Datta and Krishna Dhan Mukherji.	54-1, Valarám De's Street; 120-2, Masjidbárí Street; Calcutta.
51	1823	Prayás. Attempt. A monthly paper. 3rd year. No. 8.	Edited by Trailokya Náth Chatterji	66, Ahírítolá Street; 4, Hem Chandra Kar's Lane; Calcutta.
52	1823	Ditto ditto. 3rd year. No. 9...	Ditto ditto ...	Ditto ditto ...
53	18	Púrnimá. The Full Moon. A monthly paper. 9th year. No. 7.	Edited by Kumár Satíndra Dev Ráy	The Sávitrí Press, Bánsberiyá, Hugli ...
54	14	Ditto ditto. 9th year. No. 8...	Ditto ditto ...	Ditto ...
55	16	Ditto ditto. 9th year. No. 9...	Ditto ditto ...	Ditto ...
56	1780	Sakhí. Female Companion. A monthly paper. Vol. I. Nos. 8 and 9 (together).	Edited by Vaikuntha Náth Dás ...	5, Siva Náráyan Dás's Lane; 288-2, Cornwallis Street; Calcutta.
57	126	Sáhitya. Literature. A monthly paper. Vol. XII. No. 7.	Edited by Suresa Chandra Samájpati	51-2, Sukea's Street; 82, Sitárám Ghosh's Street; Calcutta.
58	127	Ditto ditto. Vol. XII. No. 8	Ditto ditto ...	Ditto ditto ...
59	9	Sáhitya Sanhitá. A Compilation of Literature. A monthly papor. Vol. II. No. 6.	.....	The Secular Press, 163, Kálighát Road, Bhowanipur; 106-1, Grey Street, Calcutta.
60	10	Ditto ditto. Vol. II. No. 7...	.....	Ditto ditto ...
61	16	Ditto ditto. Vol. II. No. 8 ...	.....	Ditto ditto ...
62	1780	Sávitrí. A Name. A monthly paper. Vol. V. Nos. 8 and 9 (together).	Edited by Prán Gaur Gosvámí ...	4, William's Lane, Calcutta; Sávitrí Office, Gaya.
63	1756	Sudhá. Nectar. A monthly papor. Vol. I. Nos. 1 and 2 (together).	Kálí Prasanna Dás Gupta and Kedár Náth Kávyatírtha Tarkatírtha.	211, Cornwallis Street, Calcutta; Mursidabad.
64	1	Ditto ditto. Vol. I. No. 3 ...	Ditto ditto ...	35, Bároyáritalá Road, Boliághátá, Calcutta; Mursidabad.
65	7	Ditto ditto. Vol. I. No. 4 ...	Ditto ditto ...	Ditto ditto ...
66	1760	Tattvamanjarí. Blossoms of Truth. A monthly paper. 5th year. No. 7.	Edited by the followers of Ráma Krishna Paramahansa.	336, Upper Chitpur Road; 30, Syámpukur Street; Calcutta.
67	22	Ditto ditto. 5th year. No. 8...	Ditto ditto ...	Ditto ditto ...
68	154	Ditto ditto. 5th year. No. 9 ..	Ditto ditto ...	Ditto ditto ...
69	163	Ditto ditto. 5th year. No. 10	Ditto ditto ...	5, Nila Mádhav Sen's Lane; 30, Syámpukur Street; Calcutta.
70	1828	Udbodhan. Awakening. A fortnightly paper. 3rd year. No. 17.	Edited by Svámí Trigunátíta ...	14, Ráma Chandra Maitra's Lane, Calcutta.
71	1828	Ditto ditto. 3rd year. No. 18	Ditto ditto ...	Ditto ditto ...
72	1860	Ditto ditto. 3rd year. No. 19	Ditto ditto ...	Ditto ditto ...
73	1860	Ditto ditto. 3rd year. No. 20	Ditto ditto ...	Ditto ditto ...
74	11	Utsáha. Encouragement. A monthly paper. 4th year. Nos. 10 to 12 (together).	Edited by Vraja Sundar Sányál ...	The Utsáha Press, Boalia ... ...
75	12	Ditto ditto. 5th year. No. 1...	Ditto ditto ...	Ditto ... ...
76	12	Ditto ditto. 5th year. No. 2...	Ditto ditto ...	Ditto ... ...

First Quarter ending 31st March 1902—continued.

6	7	8	9	10	11	12	13
Name or firm of printer and of publisher.	Date of issue from the press or of the publication.	Size and number of sheet, leaves, or pages.	Number of edition and number of copies of which the edition consists.	Printed or litho'd.	Price at which the book is sold to the public.	Name and residence of the proprietor of copyright, or any part of it.	Copyright registered or not.
	1901.				Rs. A. P.		
Srímanta Ráy Chaudhurí; Chandí Charan Banerji.	Dec. 13	Rl. 12mo; 24	1st; 300	P.	0 1 0	The editors, 50, Bagak's Street, North Barákhanagar, 24-Parganas.	
	1902.						
Kuladá Prasád Ráy; the editors ...	Jan. 15	Rl. 12mo; 44	1st; 300	P.	0 1 0	Ditto ditto.	
	1901.						
The Calcutta Press Co.; Atul Krishna Chatterji.	Dec. 29	Cr. 8vo; 48	1st; 500	P.	0 2 0	Manoranjan Banerji, Garden Reach, Calcutta.	
Púrna Chandra Mukherji; Upendra Náth Mukherji.	Nov. 18	D.cr. 8vo; 87	1st; 3,000	P.	0 8 0	The publisher.	
Ditto ditto ...	„ 1 & 21.	D.cr. 8vo; 112	1st; 3,000	P.	0 8 0	Ditto.	
Sányál and Co.	Nov. 13	Cr. 4to; 32	1st; 1,000	P.	0 4 0	Mahárájá Súryya Kánta Acháryya, Mymensingh.	
Ditto	„ 30	Cr. 4to; 32	1st; 1,000	P.	0 4 0	Ditto ditto.	
Ditto	Dec. 29	Cr. 4to; 32	1st; 1,000	P.	0 4 0	Ditto ditto.	
	1902.						
Sányál and Co.; the editor ...	Jan. 4	Cr. 4to; 48	1st; 3,000	P.	0 4 0	The editor, 208-2, Cornwallis Street, Calcutta.	
Ramaní Mohan De; Khagendra Chandra De.	„ 4	F'cap 4to; 16	1st; 250	P.	0 4 0	The editor, 9, Kedár Náth Datta's Lane, Calcutta.	
	1901.						
Rádháballabh Dás; Aghor Náth Datta.	Nov. 25	Dy. 8vo; 40	1st; 1,100	P.	1 4 0 Yearly.	The publisher, 120-2, Masjid-bárí Street, Calcutta.	
Rájendra Náth Sen; the Prayás Samiti.	Oct. 22	Dy. 8vo; 40	1st; 750	P.	0 3 0	T. N. Chatterji, 4, Hem Chandra Kar's Lane, Calcutta.	
Ditto ditto ...	...	Dy. 8vo; 44	1st; 750	P.	0 3 0	Ditto ditto.	
	1902.						
Annadá Prasád De	Jan. 7	Dy. 8vo; 32	1st; 750	P.	0 4 0	Rání Achalbálá Dási, Bánsberiyá, Hugli.	
Ditto	„ 7	Dy. 8vo; 32	1st; 750	P.	0 4 0	Ditto ditto.	
Ditto	Feb. 10	Dy. 8vo; 40	1st; 750	P.	0 4 0	Ditto ditto.	
	1901.						
Púrna Chandra Dás; the editor ...	Oct. 2	Cr. 4to; 24	1st; 1,000	P.	1 8 0 Yearly.	The editor.	
Hari Charan De; the editor ...	Dec. 26	Dy. 8vo; 64	1st; 1,650	P.	0 4 0	.....	
	1902.						
Ditto ...	Jan. 14	Dy. 8vo; 64	1st; 1,650	P.	0 4 0	.....	
Nírada Varan Dás; the Sáhitya Sabhá.	„ 25	Dy. 8vo; 64	1st; 750	P.	.....	The Sáhitya Sabhá, 106-1, Grey Street, Calcutta.	
Ditto ditto ...	Feb. 3	Dy. 8vo; 64	1st; 750	P.	.....	Ditto ditto.	
Ditto ditto ...	„ 25	Dy. 8vo; 64	1st; 750	P.	.....	Ditto ditto.	
	1901.						
Amrita Lál Ghosh; the editor .	Nov. 12	Rl. 12mo; 108	1st; 250	P.	0 2 0	Prán Gaur Gosvámí, Gaya.	
Kárttik Chandra Datta; Dakshináranjan Mitra Majumdár.	Sept. 29	Cr. 4to; 64	1st; 1,000	P.	0 4 0	Ráma Ranjan Mitra Majumdár.	
Haripada Vaidya; Dakshináranjan Mitra Majumdár.	Dec. 25	Cr. 4to; 32	1st; 1,000	P.	2 0 0 Yearly.	Kálí Prasanna Dás Gupta and Kedár Náth Kávyatírtha, Mursidábád.	
	1902.						
Ditto ditto ...	Feb. 24	Cr. 4to; 32	1st; 1,000	P.	.....	Ditto ditto.	
	1901.						
Nílamani Dhar; Dharendra Krishna Ghosh.	Oct. 29	Dy. 8vo; 24	1st; 500	P.	0 2 0	.....	
Ditto ditto ...	Dec. 4	Dy. 8vo; 24	1st; 500	P.	0 2 0	.....	
Ditto ditto ...	„ 29	Dy. 8vo; 24	1st; 500	P.	0 2 0	.....	
	1902.						
Asutosh Ghoshál; Dharendra Krishna Ghosh.	Jan. 25	Dy. 8vo; 24	1st; 500	P.	0 2 0	The publisher, 80, Syámpukur Street, Calcutta.	
	1901.						
The editor	Dec. 11	Dy. 8vo; 32	1st; 800	P.	0 2 0	The editor, 14, Ráma Chandra Maitra's Lane, Calcutta.	
Ditto	„ 11	Dy. 8vo; 32	1st; 800	P.	0 2 0	Ditto ditto.	
Ditto	Dec. 10	Dy. 8vo; 32	1st; 800	P.	0 2 0	Ditto ditto.	
Ditto	„ 10	Dy. 8vo; 32	1st; 800	P.	0 2 0	Ditto ditto.	
Mahiruddin Sarkár	Dec. 16	Dy. 8vo; 60	1st; 300	P.	0 6 0	Krishna Kánta Sáhá, Boalia.	
	1902.						
Ditto	Jan. 17	Dy. 8vo; 32	1st; 300	P.	0 3 0	Ditto ditto.	
Ditto	Feb. 17	Dy. 8vo; 32	1st; 250	P.	0 3 0	Ditto ditto.	

1	2	3	4	5
Serial number.	Registration number.	Title, with an English translation of the same when not in that language, the language of the book, and the subject.	Name of author, translator, or editor of the book, or any part of it.	Place of printing and publication.
		I.—BENGALI PERIODICALS—concld.		
		MISCELLANEOUS—*concld.*		
77	1896	Vasudhá. The World. A monthly paper. 1st year. No. 6.	.....	78, Amherst Street; 13, Krishna Sinhá's Lane; Calcutta.
78	1896	Ditto ditto. 1st year. No. 7 ...	.....	Ditto ditto ...
79	149	Vámábodhiní Patriká. A Journal for the Instruction of Women. A monthly paper. No. 443.	Edited by Umes Chandra Datta ...	6, College Street Bye-lane; 9, Anthony Bágán Lane, Calcutta.
80	10	Vírabhúmi. The Land of the Hero. A monthly paper. Vol. III. Nos. 1 and 2 (together).	Edited by Nílaratan Mukherji ...	30-5, Madan Mitra's Lane, Calcutta; Kirnáhár, Birbhum.
81	138	Ditto ditto. Vol. III. No. 3...	Ditto ditto ...	Ditto ditto ...
82	23	Visvajananí. The Mother of the Universe. A monthly paper. 1st year. Nos. 8 and 9 (together).	Edited by Yogendra Náth Chatterji	336, Upper Chitpur Road; 78-2, Báránasí Ghosh's Street; Calcutta.
83	155	Ditto ditto. 1st year. No. 10	Edited by Rámesvar Dás and others	Ditto ditto ...
84	124	Yuvaka. Young Man. A monthly paper. Vol. II. No. 4.	Edited by Yogánanda Prámánik ...	51-2, Suken's Street, Calcutta; the Vidyásagar, Library, Sántípur.
		POETRY.		
85	1769	Práchín Vángálá Granthávalí. A Collection of Ancient Bengali Works. A bi-monthly paper. No. 7.	Edited by Mahámahopádhyáya Hara Prasád Sástrí.	63, Bechu Chatterji's Street; 137-1, Cornwallis Street; Calcutta.
		RELIGION.		
86	1804	Khristíya Bándhav. The Christian Friend. A monthly paper. Vol. XXIII, No. 11. (C).	Edited by Rev. M. N. Náth ...	The Baptist Mission Press, 41, Lower Circular Road, Calcutta.
87	1913	Ditto ditto. Vol. XXIII. No. 12. (C).	Ditto ditto ...	Ditto ditto ...
88	1803	Snehamayí. The Affectionate Lady. A monthly paper. For November 1901. (C).	Edited by Rev. W. S. Page ...	Ditto ditto ...
89	1923	Ditto ditto. For December 1901. (C).	Ditto ditto ...	Ditto ditto ...
90	1706	Srí Chaitanya Patriká. The Journal devoted to Srí Chaitanya. A monthly paper. Vol. I. No. 2 (H).	Edited by Susíl Krishna Gosvámí ...	21, Balarám Ghosh's Street; Ultádángá Road; Calcutta.
91	29	Srí Gauránga Patriká. The Journal devoted to Srí Gauránga. A monthly paper. Vol. I. Nos. 8 and 9 (together). (H).	Edited by Yatíndra Chandra Mitra Bhavakinkar.	115, Muktárám Babu's Street; 16, Ságar Dhar's Lane; Calcutta.
92	1742	Tattvabodhiní Patriká. The Journal devoted to the Exposition of Truth. A monthly paper. No. 609. (B.)	Edited by Dvijendra Náth Tagore ...	55, Upper Chitpur Road, Calcutta ...
93	1858	Ditto ditto. No. 700 (B.)	Ditto ditto ...	Ditto ditto ...
94	84	Ditto ditto. No. 701 (B.)	Ditto ditto ...	Ditto ditto ...
		SCIENCE (NATURAL AND OTHER).		
95	1867	Svásthya. Health. A monthly paper. Vol. V. Nos. 6 and 7 (together).	Edited by Durgá Dás Gupta ...	26, Scott's Lane; 23, Madan Mitra's Lane; Calcutta.
		II.—ENGLISH PERIODICALS.		
		MEDICINE.		
1	1782	The Calcutta Journal of Medicine. A monthly paper. Vol. XX. No. 10. (E.)	Edited by Mahendra Lál Sarkár ...	51, Sánkáritolá Lane, Calcutta ...
2	1905	Ditto ditto. Vol. XX. No. 11. (E.)	Ditto ditto ...	Ditto ... ...
3	54	Ditto ditto. Vol. XX. No. 12. (E).	Ditto ditto ...	Ditto ... ...
4	1720	The Indian Lancet. A weekly journal. Vol. XVIII. No. 19. (E.)	Edited by Lawrence Fernandez ...	6, Royd Street, Calcutta ... ...
5	1740	Ditto ditto. Vol. XVIII. No. 20. (E).	Ditto ditto ...	Ditto ... ...
6	1827	Ditto ditto. Vol. XVIII. No. 21. (E.)	Ditto ditto ...	Ditto ... ...
7	1779	Ditto ditto. Vol. XVIII. No. 22. (E.)	Ditto ditto ...	Ditto ... ...
8	1834	Ditto ditto. Vol. XVIII. No. 23. (E.)	Ditto ditto ...	Ditto ... ...
9	1871	Ditto ditto. Vol. XVIII. No. 24. (E.)	Ditto ditto ...	Ditto ... ...
10	1856	Ditto ditto. Vol. XVIII. No. 25. (E.)	Ditto ditto ...	Ditto ... ...
11	51	Ditto ditto. Vol. XVIII. No. 26. (E.)	Ditto ditto ...	Ditto ... ...
12	52	Ditto ditto. Vol. XVIII. No. 27. (E.)	Ditto ditto ...	Ditto ... ...

First Quarter ending 31st March 1902—continued.

6	7	8	9	10	11	12	13
Name or firm of printer and of publisher.	Date of issue from the press or of the publication.	Size and number of sheets, leaves, or pages.	Number of editions and number of copies of which the edition consists.	Printed or litho'd.	Price at which the work is sold to the public.	Name and residence of the proprietor of copyright, or any part of it.	Copyright registered or not
	1901.				Rs. A. P.		
Hari Charan Mánná; B. B. Dhar ...	Dec. 30	Dy. 8vo; 20	1st; 175	P.	0 1 0	B. B. Dhar, 13, Krishna Sinhá's Lane, Calcutta.	
Ditto ditto ...	„ 30	Dy. 8vo; 20	1st; 175	P.	0 1 0	Ditto ditto.	
Nanda Lál Chatterji; Asutosh Ghosh.	Dec. 30	Rl. 8vo; 40	1st; 1,100	P.	0 4 0	The editor, 9, Anthony Bágán Lane, Calcutta.	
Bhútnáth Pálit; Devídás Bhattácháryya.	„ 21	Dy. 8vo; 56	1st; 1,000	P.	0 4 0	Sures Chandra Sarkár, Kirnáhár, Birbhum.	
	1902.						
Ditto ditto ...	Jan. 27	Dy. 8vo; 32	1st; 1,000	P.	0 2 0	Ditto ditto.	
	1901.						
Nílamani Dhar; Surendra Náth Dás.	Dec. 4	Dy. 8vo; 48	1st; 500	P.	0 2 0	.....	
	1902.						
Ditto ditto ...	Jan. 4	Dy. 8vo; 32	1st; 500	P.	0 2 0	.....	
Hari Charan De; Yogánanda Prámánik.	„ 20	Dy. 8vo; 16	1st; 250	P.	0 1 0	The Vidyáságar Library, Santipur.	
	1901.						
G. C. Basu and Co.; the Sáhitya Parishad Office.	Oct. 27	Rl. 8vo; 64	1st; 950	P.	2 0 0 Yearly.	The Sáhitya Parishad Office, 137-1, Cornwallis Street, Calcutta.	
Rev. C. H. Harvey	„ 19	Rl. 8vo; 24	1st; 600	P.	0 1 0	.....	
Ditto	Dec. 6	Rl. 8vo; 26	1st; 600	P.	0 1 0	.....	
Ditto	Oct. 22	Cr. 4to; 8	1st; 975	P.	0 0 6	.....	
Ditto	Nov. 28	Cr. 4to; 8	1st; 975	P.	0 0 6	.....	
Gopál Chandra Láhirí; Narendra Náth Dás.	„	Dy. 8vo; 24	1st; 500	P.	0 1 6	Balabari Dás, Ultadángá Srí Chaitanya Medical Hall, Calcutta.	
	1902.						
Susí Bhúshan Ghosh; the editor ...	Jan. 7	Dy. 8vo; 16	1st; 1,000	P.	0 8 0	The editor.	
	1901.						
Devendra Náth Bhattácháryya ...	Oct. 18	F'cap; 9	1st; 300	P.	0 6 0	The editor, 6, Dváraká Náth Tagore's Lane, Calcutta.	
Ditto ...	Nov. 28	F'cap; 14	1st; 300	P.	0 6 0	Ditto ditto.	
	1902.						
Ditto ...	Jan. 4	F'cap; 18	1st; 300	P.	0 6 0	Ditto ditto.	
	1901.						
Sányál and Co.; the Svásthya Office	Dec. 4	Dy. 8vo; 64	1st; 500	P.	0 4 0	The editor, Calcutta.	
	1901.						
Panchánan Sarkár	Nov. 25	Dy. 8vo; 44	1st; 250	P.	1 8 0	The editor, 51, Sánkárítolá Lane, Calcutta.	
Ditto	Dec. 19	Dy. 8vo; 44	1st; 250	P.	1 8 0	Ditto ditto.	
	1902.						
Ditto	Jan. 8	Dy. 8vo; 44	1st; 250	P	1 8 0	Ditto ditto.	
Fernandez	Nov. 4	Dy. 4to; 36	1st; 650	P.	0 8 0	L. Fernandez, 6, Royd Street, Calcutta.	
Ditto	„ 11	Dy. 4to; 36	1st; 650	P.	0 8 0	Ditto ditto.	
Ditto	„ 18	Dy. 4to; 36	1st; 650	P.	0 8 0	Ditto ditto.	
Ditto	„ 25	Dy 4to; 36	1st; 650	P.	0 8 0	Ditto ditto.	
Ditto	Dec. 2	Dy. 4to; 36	1st; 650	P.	0 8 0	Ditto ditto.	
Ditto	„ 9	Dy. 4to; 36	1st; 650	P.	0 8 0	Ditto ditto.	
Ditto	„ 16	Dy. 4to; 36	1st; 650	P.	0 8 0	Ditto ditto.	
Ditto	„ 23	Dy. 4to; 36	1st; 650	P.	0 8 0	Ditto ditto.	
Ditto	„ 30	Dy. 4to; 36	1st; 650	P.	0 8 0	Ditto ditto.	

1 Serial number.	2 Registration number.	3 Title, with an English translation of the same when not in that language, the language of the book, and the subject.	4 Name of author, translator, or editor of the book, or any part of it.	5 Place of printing and publication.
		ENGLISH PERIODICALS—concld.		
		MEDICINE—*concld.*		
13	53	The Indian Lancet. A weekly journal. Vol. XIX. No. 1. (E).	Edited by Lawrence Fernandez ...	6, Royd Street, Calcutta ... ...
14	87	Ditto ditto. Vol. XIX. No. 2. (E).	Ditto ditto ...	Ditto ... ...
15	120	Ditto ditto. Vol. XIX. No. 3. (E).	Ditto ditto ...	Ditto ... ...
		MISCELLANEOUS.		
16	1810	Journal of the Asiatic Society of Bengal. Vol. LXX. Part I. No. 2. 1901.	Edited by the Philological Secretary	The Baptist Mission Press; 57, Park Street; Calcutta.
17	24	Medical Missions in India. A quarterly journal. Vol. VII. No. 28.	Edited by J. M. Macphail ...	The Santal Mission Press, Pokhuria, Manbhum.
18	122	Proceedings and Journal of the Agricultural and Horticultural Society of India for July—September 1901.	Edited by P. Lancaster	115, Amherst Street, Calcutta; 4, Belvedere Road, Alipur.
19	1881	Stamps. A monthly paper. For November and December 1901 (together).	Edited by B. Gordon Jones ..	7, Mangoe Lane ... ...
20	1929	The Dawn. A monthly paper. Vol. III. No. 1.	Edited by Satis Chandra Mukherji	64, Akhil Mistri's Lane, Calcutta; 3, Padmapukur Road, Bhawanipur.
21	1930	Ditto ditto. Vol. III. No. 2 ...	Ditto ditto .	Ditto ditto ...
22	1802	St. Andrew's Colonial Homes Magazine. A monthly paper. No. 2.	Edited by Rev. J. A. Graham ...	The Baptist Mission Press, Calcutta; Kalimpong, Bengal.
23	1	The Gardener's Magazine. A monthly paper. Vol. III. No. 12.	Edited by Bhuvan Mohan Ráy ...	The New Town Press, Bhawanipur; 8, Gopálnagar Road, Alipur.
24	12	Ditto ditto. Vol. IV. No. 1 .	Ditto ditto ...	Ditto ditto ...
25	18	Ditto ditto. Vol. IV. No. 2 ..	Ditto ditto ...	Ditto ditto ...
26	19	Ditto ditto. Vol. IV. No. 3 ...	Ditto ditto ...	Ditto ditto .
27	62	The Hours of Idleness. A monthly paper. Specimen number.	Edited by Chandra Kánta Mitra ...	The Royal Press, Chowhátta, Bankipur
28	80	Ditto ditto. No. 1	Ditto ditto . .	Ditto ditto ...
29	1841	The Light of the East. A monthly paper. Vol. VIII. No. 8.	Edited by S. C. Mukherji ...	4, Gulu Ostágar's Lane; 20, Grey Street; Calcutta.
30	1854	The National Magazine. A monthly paper. Vol. XV. No. 8.	Edited by Kálí Prasanna De . .	10, Sambhu Chandra Chatterjee's Street; 32, Kálí Dás Sinha's Lane; Calcutta.
31	1731	The Oriental. A monthly paper, Vol. III. No. 12.	Edited by Manmatha Náth Mitra ...	40, Nayán Chánd Datta's Street, Calcutta.
32	38	Ditto ditto. Vol. IV. No. 1 ...	Ditto ditto ...	Ditto ditto ...
33	39	Ditto ditto. Vol. IV. No. 2 .	Ditto ditto ...	Ditto ditto ...
34	40	Ditto ditto. Vol. IV. No. 3 .	Ditto ditto ...	Ditto ditto ...
		RELIGION.		
35	1818	Monthly Record of News and Notes. A monthly paper. For November 1901. (C).	Edited by Rev. H. Ryland Brown	The Baptist Mission Press, Calcutta; Darjeeling.
36	1919	Ditto ditto. For December 1901. (C).	Ditto ditto ...	Ditto ditto . .
37	1808	Our Band. A monthly paper. Vol. VII. No. 11. (C).	Edited by Rev. J. Takle	The Baptist Mission Press, Calcutta; Bráhmanberia, Comilla.
38	1918	Ditto ditto. Vol. VII. No. 12. (C).	Ditto	Ditto ditto ...
39	1807	The India Sunday School Journal. A monthly paper. Vol. XI. No. 11. (C).	Edited by Rev. R. Burges .	The Baptist Mission Press, Calcutta .
40	1917	Ditto ditto. Vol. XI. No. 12. (C).	Ditto	Ditto ditto ...
41	1789	The Interpreter and the Young Man. A monthly paper. Vol. I. No. 8. (B).	Edited by Rev. P. C. Majumdár ...	8, College Square, Calcutta ...
42	1809	The Student's Chronicle. A monthly paper. For November 1901. (C).	Edited by Rev. W. S. Page .	The Baptist Mission Press, Calcutta; Dacca.
43	1920	Ditto ditto. For December 1901. (C).	Ditto ...	Ditto ditto ...
		III.—GARO PERIODICALS.		
		RELIGION.		
1	1815	Achikani Ripeng. A monthly paper. For October 1901. (C).	Edited by Rev. M. C. Mason ...	The Baptist Mission Press, Calcutta; Tura, Assam.
2	1916	Ditto ditto. For November 1901. (C).	Ditto	Ditto ditto ...

First Quarter ending 31st March 1902—continued.

6	7	8	9	10	11	12	13
Name or firm of printer and of publisher.	Date of issue from the press or of the publication	Size and number of sheets, leaves, or pages.	Number of edition and number of copies of which the edition consists.	Printed or litho'd.	Price at which the book is sold to the public.	Name and residence of the proprietor of copyright, or any part of it	Copyright registered or not.
	1902.				Rs. A. P.		
L. Fernandez	Jan. 6	Dy. 4to; 36	1st; 650	P.	0 8 0	L. Fernandez, 6, Royd Street, Calcutta.	
Ditto	„ 13	Dy. 4to; 36	1st; 650	P.	0 8 0	Ditto ditto.	
Ditto	„ 20	Dy. 4to; 36	1st; 650	P.	0 8 0	Ditto ditto.	
	1901.						
Rev. C. H. Harvey; the Asiatic Society of Bengal.	Nov. 16	Rl. 8vo; 52	1st; 650	P.	.....	.....	
	1902.						
A. Campbell	Jan. 1	Dy. 8vo; 32	1st; 350	P.	1 2 0 Yearly.	.....	
	1901.						
Lál Mohan Mullik; the Agricultural and Horticultural Society of India.	Dec. 30	Dy. 8vo; 32	1st; 700	P.	... ..	P. Lancaster, 4, Belvedere Road, Alipur.	
Atal Vihárí Dás; the Calcutta Philatelic Company.	Nov. 9	Rl. 8vo; 12	1st; 700	P.	.....	The editor, 7, Mangoe Lane, Calcutta.	
	1899.						
Hari Dás Ghosh; the Secretary, Bhágavat Chatuspáti.	Aug. ..	Rl 8vo; 32	1st; 500	P.	0 6 0	The publisher, 3, Padmapuker Road, Bhawanipur.	
Ditto ditto ...	Sept. ...	Rl. 8vo; 32	1st; 500	P.	.....	Ditto. ditto.	
	1901.						
Rev. C. H. Harvey; the Board of Management of the St. Andrew's Colonial Homes.	Oct. 22	Cr. 4to; 16	1st; 10,000	P.	.....	.....	
Manmatha Náth Mitra; B. M. Ráy	Dec. 7	Dy. 8vo; 12	1st; 600	P.	0 2 0	Bhuvan Mohan Ráy, Chetlá, Alipur.	
	1902.						
Ditto ditto ...	Jan. 9	Dy. 8vo; 12	1st; 500	P.	0 2 0	Ditto ditto.	
Ditto ditto ...	Feb. 10	Dy. 8vo; 12	1st; 600	P.	0 2 0	Ditto ditto.	
Ditto ditto ..	Mar. 12	Dy. 8vo; 16	1st; 500	P.	0 2 0	Ditto ditto.	
Sivanandan Lál; Punit Lál ..	Dec. 13	Dy. 8vo; 32	1st; 1,000	P.	0 1 0	Punit Lal, Chauáhttá, Bankipur.	
	1902.						
Sivanandan Lál; the editor ...	Jan. 31	Dy. 8vo; 49	1st; 200	P.	0 2 0	Ditto ditto.	
	1900.						
Bhút Náth Mánná; the proprietor	July 30	Rl. 8vo; 32	1st; 500	P.	0 4 0	.....	
	1901.						
U. Rakshit; the editor	Dec. 8	Rl. 8vo; 44	1st; 9,000	P.	1 0 0	The editor, 32, Kálí Dás Sinhá's Lane, Calcutta.	
Hari Charan Dás; the Society for the Resuscitation of Indian Literature.	Oct. 15	Rl. 8vo; 24	1st; 1,000	P.	2 0 0 Yearly.	The editor, 40, Nayán Chánd Datta's Street, Calcutta.	
Ditto ditto ...	Dec. 22	Rl. 8vo; 24	1st; 2,000	P.	.....	Ditto ditto.	
Ditto ditto ...	„ 28	Rl. 8vo; 24	1st; 2,000	P.	.....	Ditto ditto.	
	1902.						
Ditto ditto	Jan. 2	Rl. 8vo; 24	1st; 2,000	P.	...	Ditto ditto.	
Rev. C. H. Harvey; the editor ..	Nov. 7	Rl. 8vo; 4	1st; 200	P.	.....	.....	
Ditto ditto ...	„ 30	Rl. 8vo; 4	1st; 200	P.	.....	.....	
Ditto ditto ...	Oct. 16	Dy. 8vo; 8	1st; 250	P.	.....	.....	
Ditto ditto ...	Nov. 20	Dy. 8vo; 8	1st; 300	P.	.....	.....	
	1901.						
Rev. C. H. Harvey; the India Sunday School Union.	Oct. 22	Dy. 8vo; 36	1st; 1,250	P.	0 3 0	.....	
Ditto ditto ...	Nov. 16	Dy. 8vo; 36	1st; 1,250	P.	0 3 0	...	
Tulasí Charan Dás	„ 10	Rl. 8vo; 16	1st; 275	P.	0 4 0	Sures Chandra Basu, 59, Bhaváni Charan Datta's Lane, Calcutta.	
Rev. C. H. Harvey; the editor ..	Oct. 31	F'cap; 4	1st; 500	P.	0 0 6	.... .	
Ditto ditto ...	Nov. 29	F'cap; 4	1st; 500	P.	0 0 6	... .	
Rev. C. H. Harvey; the Garo Mission, American Baptist Missionary Union.	Oct. 14	Cr. 8vo; 16	1st; 750	P.	.....	.....	
Ditto ditto ...	Nov. 23	Cr. 8vo; 16	1st; 750	P.	.....	.....	

1	2	3	4	5
Serial number.	Registration number.	Title, with an English translation of the same when not in that language, the language of the book, and the subject.	Name of author, translator, or editor of the book, or any part of it.	Place of printing and publication.
		IV.—HINDI PERIODICALS.		
		HISTORY.		
1	79	Rájputáná. A monthly paper. Part I. ...	Edited by Kámákhyá Náth Mukherji.	71, Bartalá Street, Burabázár, Calcutta
		RELIGION.		
2	1915	Chhotánágpur Dút Patriká. The Chhota Nagpur Messenger. A monthly paper. For December 1901. (C).	Edited by Pandit Bholá Náth ..	The Baptist Mission Press, Calcutta; Ranchi.
		V.—SANSKRIT PERIODICAL.		
		MISCELLANEOUS.		
1	88	Vidyodayah. The Dawn of Learning. A monthly paper. Vol. XXX. Nos. 7 and 8 (together).	Edited by Hrisikesa Sástri ...	100-2, Mechhuá Bázár Street, Calcutta; Bhátpárá, 24-Parganas.
		VI.—URDU PERIODICALS.		
		RELIGION.		
1	75	Makhzáne Tahqiq. Collection of Enquiries. For Jamádiassáni and Rajab, 1319 Hijra (October and November 1901).	Edited by Mahammad Zainuddin ..	The Hánáfiá Press, Lodhikátrá, Patna City.
2	81	Ditto ditto. For Shában and Ramzán, 1319 Hijra (November and December 1901). (M).	Ditto ditto ...	Ditto ditto ...
		BI-LINGUAL PERIODICALS.		
		I.—BENGALI AND ENGLISH PERIODICALS.		
		MEDICINE.		
1	64	The Indian Homœopathic Review. A monthly paper. For July 1901. (E.)	Edited by P. C. Majumdár ...	10, Sambhu Chandra Chatterji's Street, Calcutta.
2	63	Ditto ditto. For August and September 1901 (together). (E).	Ditto ...	Ditto ditto ...
		II.—BENGALI AND SANSKRIT PERIODICALS.		
		MISCELLANEOUS.		
1	1837	Jyotirvid. Astrologer. A monthly paper. 1st year. No. 6.	Edited by Vimalá Prasád Siddhánta Sarasvatí.	133, Masjidbárí Street; 181, Mániktalá Street; Calcutta.
2	109	Ditto ditto. 1st year. No. 7 ...	Ditto ditto ...	Ditto ditto ...
		RELIGION.		
3	18	Hindu Patriká. The Hindu Magazine. A monthly paper. 8th year. Nos. 9 and 10 (together). (H.)	Edited by Yadu Náth Majumdár ...	The Hindu Patriká Press, Jessore ...
4	2	Srí Srí Gauḍa Bhúmi. The land of Gauḍa. A monthly paper. Vol. I. No. 5.	Edited by Ráma Prasanna Ghosh ...	The Visvavijay Press; Govarhátí, Gokarna; Murshidábád.
		III.—ENGLISH AND SANSKRIT PERIODICALS.		
		MISCELLANEOUS.		
1	16	The Brahmacháriná The Celebate. A monthly paper. Vol. II. Nos. 10 and 11 (together).	Edited by Yadu Nath Majumdár ...	The Hindu Patriká Press, Jessore ...
2	17	Ditto ditto. Vol. II. No. 12 ...	Ditto ditto ...	Ditto ditto ... ...
3	20	Ditto ditto. Vol. III. No. 1 ...	Ditto ditto ...	Ditto ditto ... ...

First Quarter ending 31st March 1902—concluded.

Name or firm of printer and of publisher.	7 Date of issue from the press or of the publication.	8 Size and number of sheets, leaves, or pages.	9 Number of edition and number of copies of which the edition consists.	10 Printed or litho'd.	11 Price at which the book is sold to the public.	12 Name and residence of the proprietor of copyright, or any part of it.	13 Copyright registered or not.
					Rs. A. P.		
Dakshiná Charan Chakravarti ...	1901. Dec. 20	Rl. 8vo; 32	1st; 1,000	P.	0 2 0	The editor, Hriday Krishna Banerji's Lane, South Byántrá, Howrah.	
Rev. C. H. Harvey; S. P. G. Mission.	„ 11	Dy. 4to; 4	1st; 400	P.	0 0 6	.....	
Thákurdás Chatterji; the editor ...	1902. Jan. 12	Rl. 12mo; 36	1st; 250	P.	0 4 0	The publisher, Bhátpárá, 24-Parganas.	
Mahammad Abdul Wáhed Hánáfi...	Jan. 20	Rl. 8vo; 24	1st; 500	L.	2 0 0 Yearly.	Abdul Wáhed, Lodhikátrá, Patna City.	
Ditto ditto ...	Feb. 1	Rl. 8vo; 36	1st; 500	L.	.....	Ditto ditto.	
U. Rakshit; K. L. Bágchí ...	1901. Dec. 15	Dy. 8vo; 32	1st; 150	P.	0 8 0	The editor, Cornwallis Street, Calcutta.	
Ditto ditto ...	1902. Jan. 2	Dy. 8vo; 64	1st; 150	P.	0 8 0	Ditto ditto.	
Yogendra Náth Chakravartí; Siddheswar Ghosh.	Dec. 5	Dy. 8vo; 50	1st; 1,000	P.	0 8 0	The publisher, 181, Mániktalá Street, Calcutta.	
Ditto ditto ...	1902. Jan. 20	Dy. 8vo; 58	1st; 1,000	P.	0 2 0	Ditto ditto.	
Káli Prasanna Chatterji ...	Feb. 14	Rl. 8vo; 62	1st; 500	P.	0 6 0	.....	
Visvambhar Dás; the editor ...	Jan. 11	Dy. 8vo; 40	1st; 500	P.	0 2 6	.....	
Káli Prasanna Chatterji ...	1901. Dec. 24	Rl. 4 to; 24	1st; 500	P.	0 6 0	.....	
Ditto ditto ...	1902. Jan. 24	Rl. 4 to; 24	1st; 500	P.	0 6 0	.....	
Ditto ditto ...	Feb. 26	Rl. 4 to; 14	1st; 500	P.	0 6 0	.....	

Additional List of Copyright of Books which, having been previously received, could not be embodied in the accompanying Catalogue.

1	2	3	4	5	6	7	8	9
Serial number.	Registration number.	The title of the book and the contents of the title-page with a translation into English of such title or contents when the same are not in the English language.	Name of author, editor, or translator of the book or any part of it.	Catalogue No.	Quarter.	Page of the Catalogue.	Date of registration of copyright.	The name and residence of the proprietor of the copyright, or of any portion of such copyright.
							1901	
24	28	A Short History of the Indian People.	Adhar Chandra Mukherji, M.A., B.L.	480	3rd, 1901	88 89	23rd August	Adhar Chandra Mukherji, M.A., B.L., Professor of History and Logic, General Assembly's Institution, Calcutta.
25	29	Tabalá Taranginí. The Stream of the Tabala (a kind of Native Instrument of music).	Prasanna Kumár Sáhá.	1500	„ „	2-3	27th „	Prasanna Kumár Sáhá Banikya, 2, Hara Prasád De's Lane, Bhákápati, Calcutta.
26	30	Rahasya Pùjá Paddhatih. The Ritual for Secret Worship.	Jnánendra Náth Bhattácháryya, Tantraratna.	208	„ „	76-77	30th „	Jnánendra Náth Bhattácharyya, Tantraratna, 52, Siva Thákur's Lane, Calcutta.
27	31	The Students' Pronouncing Dictionary.	H. M. Gosvámí, B.A.	119	„ „	68 69	12th Sept.	Sarat Kumár Láhirí, 54, College Street, Calcutta.
28	33	Satíka Sánuváda Dípiká Vá Suddhi Dípiká. The Lamp with Notes and a Translation or the Lamp of Purifications.	Nílakamal Vidyánidhi.	235	4th, „	54-55	26th „	Ganes Chandra Ghosh, 1, Nimu Gosvámí's Lane, Calcutta.
29	34	Tattva Mímánsa, Investigation of Truth.	Rádhá Raman Mitra.	1928	„ „	24-25	1st Oct	Radhá Raman Mitra, 9, Syámbazar Street, Calcutta.
30	35	Jones's Perfect Tyre Process.	G. E. Jones	609	„ „	32 33	3rd „	G. E. Jones, 4, 5, & 6, British Indian Street, Calcutta.
31	36	Jones's Perfect Full Roadster Tyre Process.	Ditto . .	608	„ „	32 33	8th „	Ditto, ditto.
32	37	Elementary Bengali Grammar in English.	Mrs. Moorat	137	„ „	52-53	16th „	Mrs. Moorat, 64, Amherst Street, Calcutta.
33	38	Consecutive Tables of Indian Law Reports and Calcutta Law Reports, Civil Cases, 1876—93.	J. B. Worgan	592	„ „	30 31	4th Nov.	J. B. Worgan, C.S. (Retired), Oak Lodge, Darjeeling.

N.B.—Numbers 20 to 23 are incorporated in the body of the Catalogue for the quarter ending 31st March 1902.

The Catalogue of Books received in the Bengal Library during the First Quarter ending 31st March 1902 contains the following :—

No.	Language.	Books		Total.
		Non-educational.	Educational.	
	Uni-linguals.			
1	Assamese	4	3	7
2	Bengali	164	132	296
3	English	47	36	83
4	Hindi	11	10	21
5	Lepcha	1	.....	1
6	Manipuri	.....	1	1
7	Musalmani-Bengali	13	.....	13
8	Sanskrit	18	7	25
9	Santali	1	.....	1
10	Urdu	7	1	8
11	Uriya	37	13	50
	Total Uni-linguals ...	303	203	506
	Bi-linguals.			
1	Bengali and English	5	18	23
2	Bengali and Pali	1	.....	1
3	Bengali and Sanskrit	32	3	35
4	English and Hindi	.....	1	1
5	English and Sanskrit	1	1	2
6	English and Urdu	.....	1	1
7	English and Uriya	.....	1	1
8	Hindi and Sanskrit	3	.....	3
9	Sanskrit and Uriya	6	.....	6
	Total Bi-linguals ...	48	25	73
	Tri-linguals.			
1	Arabic, Musalmani-Bengali, and Urdu	1	.....	1
2	Bengali, English, and Sanskrit	.....	9	9
	Total Tri-linguals ...	1	9	10
	Uni-lingual Periodicals.			
1	Bengali Periodicals	95	.....	95
2	English Periodicals	43	.....	43
3	Garo Periodicals	2	.....	2
4	Hindi Periodicals	2	.....	2
5	Sanskrit Periodicals	1	.....	1
6	Urdu Periodicals	2	.....	2
	Total Uni-lingual Periodicals ...	145	.....	145
	Bi-lingual Periodicals.			
1	Bengali and English Periodicals	2	.....	2
2	Bengali and Sanskrit Periodicals	4	.....	4
3	English and Sanskrit Periodicals	3	.....	3
	Total Bi-lingual Periodicals ...	9	.....	9
	Grand Total of Books, &c., &c. ...	506	237	743

RÁJENDRA CHANDRA SÁSTRI,
Librarian of the Bengal Library and Keeper of the Catalogue of Books under section XVIII of Act XXV of 1867.

Calcutta,
The 8th May 1902.

REGISTERED No., C209.]

No. 27 of 1902.

SUPPLEMENT TO

The Calcutta Gazette.

WEDNESDAY, JULY 2, 1902.

OFFICIAL PAPERS.

[Non-Subscribers to the GAZETTE *may receive the* SUPPLEMENT *separately on payment of five rupees per annum if delivered in Calcutta, or seven rupees and eight annas if sent by post.]*

CONTENTS.

	Page
RESOLUTION on the Report on Colonial Emigration for the year 1901	917
Annual Administration Report of the Meteorological Department for 1901-1902	919
Returns of Joint-stock Companies for the year 1901-1902 ...	927
Resolution on the Report of the Sanitary Commissioner, Bengal for the year 1901	945
Weather and Crop Report for the week ending the 30th June 1902	948
Statement showing the quantities of the Principal Staples of Traffic imported into and exported from Calcutta from the interior in April 1902	952
VITAL Statistics of Districts and Towns in Bengal for the month of April 1902	959
Statement showing heights over mean sea-level and low water in the rivers Ganges, Bhagirathi, Jalangi and Brahmaputra for the month of May 1902	961
Circular and Eastern Canal for the week ending Saturday the 28th June 1902	962
Results of the Meteorological Observations taken at the Alipore Observatory from 22nd to 28th June 1902 ...	963
Bengal Central Railway during the month of April 1902	964
Weekly Return of Traffic Receipts on Indian Railways ...	966

RESOLUTION ON THE REPORT ON COLONIAL EMIGRATION FOR THE YEAR 1901.

GENERAL DEPARTMENT—EMIGRATION.

Calcutta, the 24th June 1902.

RESOLUTION—No. 2095.

READ—

The Annual Report on Emigration from the Port of Calcutta to British and Foreign Colonies for the year 1901.

THE Report for the year 1901 is confined within the limits fixed by Government last year.

2. The number of agencies recruiting emigrants for British Colonies was one less than last year, as no labour was needed for Jamaica. The agency for the Dutch Colony of Surinam, which despatched no labourers last year, despatched 643 emigrants during the year under review. There was again an increase both in the total demand and supply of labour for the Colonies; and Demerara, as in the previous year, requisitioned and received the largest number of emigrants.

Requisition and despatch of labour.

3. As in former years, though not so markedly, the greater number of the emigrants were recruited in the United Provinces of Agra and Oudh (over 63 per cent. of the whole number), but a considerable number were also recruited in the Central Provinces and in Bengal and Bihar, and a few (313, or 1·76 per cent.) were recruited in the Punjab.

Depôts.

4. Of 17,771 emigrants located in the sub-depôts, 15,142 actually arrived in the Calcutta depôts, and after adding to this number emigrants recruited in the preceding year, readmissions from hospitals after recovery and infants born during the year, 15,973 emigrants were accommodated in the depôts in Calcutta during the year, as compared with 15,465 in the preceding year.

The casualties in the depôts by death and desertion were fewer than in the preceding year, but rejections for unfitness increased in number, and the sufficiency of the medical examination in the mufassal came under discussion during the year. The Lieutenant-Governor notices with satisfaction the generally satisfactory report regarding the sanitary condition of the depôts. There was, however, a noticeable prevalence of cerebro-spinal fever; the disease was believed by the Medical Inspector to have been brought into the depôts by intending emigrants and did not originate in the depôts.

Embarkation of emigrants.

5. The emigrants who embarked for the Colonies numbered 11,951, or 277 more than in the preceding year. Of these, 495 were returned emigrants who re-engaged. There was a marked increase in the number of steam-vessels employed in emigration work as compared with sailing ships during the year.

Returned emigrants; and remittances of immigrants in the Colonies.

6. During the year 3,708 emigrants left the Colonies for India, with aggregate savings of Rs. 6,14,176-9-6, or an average each with Rs. 165-10-2. Demerara returned the largest number of emigrants, viz., 1,723. The Indian immigrants in Natal who are about 66,000 in number remitted to India during the year nearly 12½ lakhs of rupees by money-order, and have again far exceeded the immigrants of other Colonies both in the number and value of their remittances to India. The increase in Natal has been steady and marked for the last four years, rising from Rs. 5-6-8 for each resident immigrant in 1898 to Rs. 18-10-11 in 1901. It would appear that the Indian immigrant in Natal is more prosperous than his fellow-countryman in the other Colonies, but it may be that the increased remittances were a temporary result of the war. The Colonies rank as follows in the order of the value of the average remittances made—Natal, Fiji, Mauritius, Trinidad, St. Lucia, Demerara, and Jamaica.

7. The thanks of the Lieutenant-Governor are due to Dr. Banks for his administration of the Department.

By order of the Lieutenant-Governor of Bengal,

W. C. MACPHERSON,

Offg. Secretary to the Government of Bengal.

ANNUAL ADMINISTRATION REPORT OF THE METEOROLOGICAL DEPARTMENT FOR 1901-1902.

THE following report is published for general information.

W. C. MACPHERSON,
Offg. Secy. to the Govt. of Bengal.

DARJEELING;
The 28th June 1902.

THE Bengal Meteorological Department was under my charge throughout the past year.

2. On the 31st March 1902 the number of observatories under my direct control was 46, *i.e.*, the same number as on the corresponding date last year. The classification of observatories continued to be the same as in the previous year, there being six second-class, 39 third-class and one voluntary observatory. The second-class observatories record observations at 8, 10 and 16 hours daily and those of the third-class one set of observations only, at 8 A.M. The voluntary observatory at Cooch Behar also records one set of observations, at 8 A.M.

3. The following table gives the names and distribution of these 46 observatories :—

Second-class Observatories.

Chittagong.	Darjeeling.	Hazaribagh.
Darbhanga.	False Point.	Saugor Island.

Third-class Observatories.

Arrah.	Daltonganj.	Narayanganj.
Balasore.	Dehri.	Naya Dumka.
Bankura.	Dinajpur.	Noakhali.
Barisal.	Faridpur.	Pamban (in Madras).
Berhampore.	Gaya.	Patna.
Bhagalpur	Jalpaiguri.	Puri.
Bogra.	Jessore.	Purnea.
Burdwan.	Krishnagar.	Purulia.
Buxar.	Malda.	Rampur Boalia.
Chaibassa.	Midnapore.	Ranchi.
Chapra.	Motihari.	Raniganj.
Comilla.	Muzaffarpur.	Rangpur.
Cuttack.	Mymensingh.	Sirajganj.

Voluntary Observatory.

Cooch Behar.

4. There has been no change in the system of observation, except that the record of pressure and temperature by automatic instruments was introduced at Burdwan observatory from the 13th April 1901.

5. *Inspection of Observatories.*—The following table shows the observatories that were inspected during the past year and the dates of inspection. Altogether 24 visits of inspection were made, viz., one by Mr. Eliot, Meteorological Reporter to the Government of India and Director-General of Indian Observatories, seven by myself, one by Mr. C. Gaetane Sub-Inspector of Observatories attached to the Meteorological Office, Government of India, and 15 by Babu Jati Lal De, my head clerk.

No.	Station.	Date of Inspection.	By whom Inspected.
1	Burdwan ...	11th and 12th April ...	Sub-Inspector, Meteorological Office, India
2	Darjeeling ...	23rd June ...	Meteorological Reporter to the Government of India, and Director-General of Indian Observatories.
3	Barisal ...	28th, 29th and 30th June ...	Head-Clerk, Meteorological office, Bengal.
4	Noakhali ...	2nd, 3rd and 4th July ...	Ditto ditto.
5	Jessore ...	9th and 10th July ...	Ditto ditto.
6	Faridpur ...	21st and 22nd August ...	Ditto ditto.
7	Comilla ...	24th to 26th ,,	Ditto ditto.
8	Mymensing ...	27th and 28th ,, ..	Ditto ditto.
9	Narayanganj ...	29th ,, ...	Ditto ditto.
10	Sirajganj ...	5th and 6th October ...	Ditto ditto.
11	Bogra ...	7th and 8th ,, ...	Ditto ditto.
12	Rampur Boalia ...	10th and 11th ,, ...	Ditto ditto.
13	Krishnagar ...	13th ,, ...	Ditto ditto.
14	Purnea ...	1st and 2nd December ...	Ditto ditto.
15	Bhagalpur ...	4th and 5th ,, ...	Ditto ditto.
16	Berhampore ...	8th and 9th ,, ...	Ditto ditto.
17	Dumka ...	11th and 12th ,, ...	Ditto ditto.
18	Bankipur ...	24th ,, ...	Meteorological Reporter to the Government of Bengal.
19	Chapra ...	25th and 26th ,, ...	Ditto ditto.
20	Muzaffarpur ..	27th and 28th ,, ...	Ditto ditto.
21	Motihari ...	28th and 29th ,, ...	Ditto ditto.
22	Darbhanga ...	30th ,, ...	Ditto ditto.
23	Burdwan ...	12th January ...	Ditto ditto.
24	Faridpur ...	26th ,, ...	Ditto ditto

6. *Results of Inspection and Work at Observatories—Second-class Observatories.—Darjeeling* was inspected by Mr. Eliot, but no report on the condition of the observatory has been received. The observations received from Darjeeling have been accurate and trustworthy. *Darbhanga* observatory was in good condition at the time of my visit and the observations received have been satisfactory throughout the year. Of the remaining 4 observatories which could not be inspected during the past year, *Hazaribagh* continued to submit accurate observations, and those received from *Saugor Island*, *Chittagong* and *False Point* were generally correct.

7. *Third-class Observatories.*—The observatories at *Berhampore*, *Bhagalpore*, *Bogra*, *Burdwan*, *Chapra*, *Jessore*, *Krishnagar*, *Narayanganj*, *Noakhali*, *Patna*, and *Purnea* were found to be in good condition at the time of inspection and the observations recorded by the observers at these stations have been satisfactory throughout the year. *Barisal*, *Comilla*, *Dumka*, *Rampur Boalia*, and *Sirajganj* at the time of inspection were found to be in good condition. The observations submitted from the first three have been accurate, except during short periods, while temporary observers were in charge. The reports received from the last two were not so carefully prepared. *Faridpur* was visited twice and on both occasions the observatory was found to be in an unsatisfactory condition. When I visited the observatory in January 1902, I found the observer suffering from nervous debility and unfit for work. It was thought necessary to relieve him of his duties and at the suggestion of the District Engineer, who is the

Superintendent of the observatory, the 3rd teacher of the local zilla school was appointed as observer with effect from 27th January. The old observer has nce submitted an application to retire on pension, on medical certificate. 'rom 27th January the observations have been correct and reliable. *Motihari*, *Muzaffarpur*, and *Mymensingh*, when inspected, were found to be in bad condition. 'he Mymensingh observer was fined Rs. 2, and those at Motihari and Muzaffarur were warned to be more careful in future.

8. The observers at the remaining stations, more especially those at *Buxar*, *Cuttack*, *Dinajpur*, *Ranchi* and *Ranigunge*, that could not be visited during the year generally did good work. There has been no improvement in the case of *Pamban* and *Rangpur*, where the observers are less careful than they might be.

9. *Voluntary Observatory.—Cooch Behar* is the only observatory of this class in Bengal. It could not be visited, but the observations received have been accurate throughout the year.

10. It was found necessary, during the year under review, to remove the thermometer shed at Darjeeling from the site it occupied, as it was found that changes were being made in the garden of the Rector of St. Paul's School which were of such a character as to render the observations unreliable. A site was selected by the observer and observations there were commenced on the 12th April 1902.

11. I intended to visit Malda to settle the question of removing the wind instruments from the roof of the Circuit House, where they are sheltered by trees roundabout, as stated in paragraph 15 of my last Administration Report. But this could not be arranged for, as the funds for this purpose, at the disposal of the Meteorological Reporter to the Government of India, were exhausted. I hope to visit Malda in the next cold weather.

12. Owing to the construction of the new Judges' Court building at Mymensingh, the exposure of the rain-gauge at that station was affected, and by arrangement with the Magistrate it was removed to a better site.

13. The following observers were granted special awards by the Meteorological Reporter to the Government of India and Director-General of Indian Observatories for storm observations, &c., taken by them during the past year:—

Station.	Amount.
	Rs.
Burdwan	3
Jessore	1
Rampur-Boalia	1
Saugor Island	2
Pamban	5

14. *Work at and Inspection of Rain-gauge Stations.*—The number of rain-gauge stations on the 31st March 1902, was 366, *i.e.*, 4 more than on the corresponding date last year. Five stations, viz., Amta in Howrah district, Atwari, Birganj, and Parbatipur in Dinajpur, and Saidpur in Rangpur, were started, and 1 station, viz, Subarnakhali, was closed during the year. (The rainfall work at Subarnakhali has been in abeyance during the whole of the past year, there being no suitable site for the rain-gauge. This station has, therefore, been stated as "closed" for the present.)

15. 300 visits of inspection were made against 301 during 1900-1901. The total number of rain-gauges inspected was 177 against 194 in the previous year. The reports received from the inspecting officers showed that the rain-gauges were for the most part in good condition and the rainfall registers properly kept.

16. The following table shows the distribution of the 366 rainfall-stations in the various districts in Bengal, as it stood on 31st March 1902 and the number of stations inspected in each district during the past year:—

District.	Number of rain-gauge stations.	Number of rain-gauge stations inspected.	District.	Number of rain-gauge stations.	Number of rain-gauge stations inspected.
Burdwan	5	1	Chittagong	7	2
Birbhum	6	4	Chittagong Hill Tracts ...	3	3
Bankura	10	9	Patna	6	3
Midnapore	8	5	Gaya	10	4
Hooghly	3	3	Shahabad	14	3
Howrah	4	3	Saran	9	5
24-Parganas	9	4	Champaran	5	4
Nadia	5	4	Muzaffarpur	7	3
Murshidabad	9	5	Darbhanga	5	2
Jessore	5	5	Monghyr	10	2
Khulna	13	3	Bhagalpur	8	6
Rajshahi	6	1	Purnea	7	3
Dinajpur	13	13	Malda	4	Nil
Jalpaiguri	7	4	Sonthal Parganas ...	20	10
Darjeeling	6	5	Cuttack	8	4
Cooch Behar	5	Nil	Balasore	7	5
Rangpur	9	2	Puri	9	Nil
Bogra	4	Nil	Hazaribagh	6	2
Pabna	2	2	Ranchi	11	5
Dacca	5	1	Palamau	10	2
Mymensingh	10	4	Manbhum	7	4
Faridpur	3	1	Singhbhum	10	4
Backergunge	7	6	Orissa Tributary Mahals ...	3	Nil
Hill Tippera	1	Nil	Angul	11	2
Tippera	8	7	Tibet	1	Nil
Noakhali	7	7			

17. The system of supplying rain-gauges and measure glasses to the rain-registering officers in Bengal from the Meteorological Office, Bengal, by an arrangement mentioned in paragraph 17 of my Administration Report for 1899-1900, worked satisfactorily.

18. *Departmental Reports.*—The short annual report on the meteorology of Bengal for the year 1901, with two maps illustrating the actual and percentage rainfall was prepared before the close of the past official year. (It was submitted to the Government of Bengal on 24th April 1902.)

19 The report on the meteorology of Bengal for the monsoon season of 1901 was prepared and submitted to the Government of Bengal on the 23rd January 1902. The usual number of rainfall maps illustrating the distribution of rainfall over the province, the district variation from the normal and the percentage variation from the normal for the monsoon period of 1901, were also prepared and submitted to Government with the monsoon summary.

20. The monthly rainfall table for Bengal and the meteorological table for Bengal and Assam, with a summary of the chief features of the weather of the month, was published in the *Calcutta Gazette* about the middle of every month.

21. The following annual rainfall tables were prepared and published in the *Calcutta Gazette.*

Table I—Showing the monthly and annual rainfall at 366 stations in Bengal for 1901.

Table II—Showing the monthly and annual average rainfall at 254 rainfall stations in Bengal.

Table III—Comparison table of the rainfall of 1901 at 254 rainfall stations in Bengal with averages of previous years.

Addenda to the rainfall table of the Province of Bengal for the year 1901.

22. A set of three charts showing the distribution of actual rainfall, the variation from the normal and the percentage variation was prepared and submitted monthly to the Government of Bengal and furnished to the Sanitary Commissioner for Bengal during the period May to October 1901.

23. The Bay of Bengal and Bengal daily weather report dealing with observations taken at 68 meteorological observatories, viz., 46 observatories

under my direct control and 22 other stations in Assam, Burma, Madras and Ceylon, including the first-class observatory at Alipore, which is under the administration of the Meteorological Reporter to the Government of India and Director-General of Indian Observatories, was published from 1st May to 31st October. The increase is due to the addition of Tezpur and Dibrugarh to the number of reporting stations. The information of wind velocity at 8 A.M. was considered valuable by the Port authorities, and at the suggestion of the Deputy Port Conservator of Calcutta, and with the sanction of the Meteorological Reporter to the Government of India and Director-General of Indian Observatories and of the Government of Bengal, a column giving this additional information has been added to the report. The Bay of Bengal report was published during the rest of the year.

24. The daily flag signal message to Saugor Island and Elephant Point (Rangoon) and the daily weather telegram to the following officers were continued throughout the year:—

Port Officer, Akyab.
Ditto, Moulmein.
Ditto, Rangoon.
Ditto, Negapatam.
Ditto, Coconada.
Vice-Chairman, Port Commissioners, Rangoon.
Deputy Port Conservator, Madras.
Port Conservator, Cuddalore.
Ditto, Porto Novo.

25. The daily weather telegram was sent to the Port Officer, Chittagong, from 16th May to 16th November (inclusive). The telegram was also sent to the Port Conservator, Calingapatam, regularly on Fridays, Saturdays and Sundays.

26. Warnings of expected heavy rainfall were sent to—

The Superintending Engineer, Orissa Circle.
Ditto, Sone Circle.
Ditto, South-Western Circle.
The Executive Engineer, Cossye Division.
Ditto, Balasore Division.
Ditto, Akhoyapada-Jajpur Division.
Ditto, Arrah Division.
Ditto, Buxar Division.
Ditto, Eastern Sone Division.
The Proof Officer, Balasore
The Superintendent of Telegraphs, Madras Division.
Ditto, Bengal Division.
The Traffic Superintendent, East Coast Railway.
The Engineer-in-Chief, East Coast Railway.
The Chief Engineer for Irrigation, Madras.

27. Information of the occurrence of rainfall above one inch at Daltonganj was sent to the Sub-Engineer, Dehri Workshops.

28. There was no addition or alteration in the code of storm signals.

29. The dates of the principal storms and barometric depressions occurring during the past year are given in the first of the two following tables, and the action taken in the matter of issuing storm warnings and hoisting storm signals is indicated in the second of these tables.

Table giving a brief statement of the storms which affected the Bay of Bengal coasts during the year 1901-1902.

Number of storm.	Period of depression or storm.	Character of storm.	Coast affected.
1	May 23rd to 25th ...	Feeble cyclonic storm formed in the south-east of the Bay on the 22nd of May, when there was a diffused depression over the south of the Bay with indraught towards it from both the Madras and Burma coasts. It moved northwards during the three subsequent days; but as it approached the north of the Bay, it became diffused and practically ceased to exist as a cyclonic disturbance.	Burma and Arakan coasts.

Number of storm.	Period of depression or storm.	Character of storm.	Coast affected.
2	July 25th to 28th ...	Shallow depression which formed in the north-west of the Bay. On the 25th of July it was off the coast of the Circars, but on the 26th and 27th was more to the north, and ultimately passed inland across the Orissa coast on the 28th	Orissa and Bengal coasts.
3	September 19th to 22nd	Barometric depression which began about the 17th of September in the south-east of the Bay and in that region was a storm of some severity, but as it moved westward towards the Circars, it became diffused. Moving into the Central Provinces, it turned northwards and broke up on reaching the Himalayas about the 26th.	Bengal, Orissa and Circars coasts.
4	October 14th ...	Barometric depression of small extent and of considerable depth which began to develop over the north of the Bay. It moved in a south westerly direction, and struck the coast of the Circars on the 14th of October. Stormy weather was experienced on the coast between Gopalpur and Masulipatam for about 24 hours.	Circars coast.
5	November 14th to 18th...	Barometric depression which was near the coast on the 14th of November, the centre being east from Cocanada. On the 15th the centre was near Vizagapatam and on the following day near Gopalpur. At that time the depression was recurving and after causing very heavy rain to the north of the centre, filled up somewhat, and in its subsequent course over the north of the Bay, towards Chittagong, it caused no great increase in wind velocity. On the 19th all trace of the disturbance had disappeared.	Bengal, Orissa and Circars coasts.
6	November 24th to 26th	Cyclonic storm which began to form near the Andaman Islands about the 22nd of November when there was a diffused depression extending over the centre and south of the Bay. Within this depression there appeared to be two centres of disturbance, one of which tended westward towards the Madras coast. More to the north-east, the second disturbance at first moved slowly north-westward and when it approached the Orissa coast on the morning of the 26th, it was of considerably more than average severity. Passing between Balasore and Saugor Island and between Midnapore and Calcutta, the depression turned more to the east and soon afterwards filled up.	Ditto.
7	December 6th to 9th ...	Barometric depression which developed in the south-east of the Bay about the 6th of December and advancing towards the Madras coast, caused very stormy weather with heavy rainfall on a part of the coast near Madras. The depression passed rapidly westward across the south of the Peninsula about the 9th.	Coromandel coast.

Table showing the action taken by the Bengal Meteorological office in warning the coasts affected by the storms enumerated in the previous table.

Storm number.	Hoisting of storm signals.			Warning of ports by cautionary telegrams.	
	Ports ordered to hoist signals.	When hoisted.	When lowered.	Ports warned by cautionary telegrams.	Time and date of despatch of cautionary telegrams.
1	2	3	4	5	6
1	.....	.....	.....	Tavoy ...	10-47 A.M. of 23rd; 10-20 A.M. of 24th; 10-30 A.M. of 25th May.
				Mergui ...	Ditto ditto.
				Moulmein ...	Ditto ditto.
				Rangoon ..	Ditto ditto.
				Bassein ...	Ditto ditto.
				Akyab ...	Ditto ditto.
				Colombo ..	Ditto ditto.
2	Calcutta	10-20 A.M. of 27th July ...	4-40 P.M. of 28th July.	Calcutta* ...	10-35 A.M. of 27th; 3-3 P.M. of 28th July
	Budge-Budge ...	11-15 A.M. of ditto ...	4 P.M. of ditto.	Chandbali ...	10-27 A.M. of 28th July.
	Mud Point ...	11-10 A.M. of ditto ...	3-50 P.M. of ditto.	Balasore ...	Ditto ditto.
	Diamond Harbour ..	11-10 A.M. of ditto ..	3-45 P.M. of ditto.	False Point ...	Ditto ditto.
	Saugor Island ..	11 5 A.M. of ditto ..	3-45 P.M. of ditto.	Puri ...	Ditto ditto.
	Chandbali ...	11-20 A.M. of ditto ...	4 P.M. of ditto.	Gopalpur ...	9-58 A.M. of 28th; 10-20 A.M. of 29th July.
	Balasore ...	1-30 P.M. of ditto ...	7 P.M. of ditto.	Bimlipatam ...	Ditto ditto.
	False Point ...	2-28 P.M. of ditto ...	5-18 P.M. of ditto.	Vizagapatam ...	Ditto ditto.
	Puri ...	11-45 A.M. of ditto ...	9-15 P.M. of ditto.	Cocanada ...	Ditto ditto.

* In column 5 of the above table "Calcutta" indicates both the Port Officer, Calcutta and the Deputy Director, Indian Marine, Government Dockyard, Kidderpore, Calcutta.

Storm number.	Hoisting of storm signals.			Warning of ports by cautionary telegrams.	
	Ports ordered to hoist signals.	When hoisted.	When lowered.	Ports warned by cautionary telegrams.	Time and date of despatch of cautionary telegrams.
1	2	3	4	5	6
3	Calcutta	12-20 P.M. of 20th Sept.	11-30 A.M. of 22nd Sept.	Calcutta*	10-50 A.M. of 20th; 10-11 A.M. of 22nd September.
	Budge-Budge	Noon of ditto	11 A.M. of ditto.	Gopalpur	11-4 A.M. of 19th; 10-28 A.M. of 20th; 10-30 A.M. of 21st; 10 A.M. of 22nd September.
	Mud Point	11- 5 A.M. of ditto	10-45 A.M. of ditto.	Bimlipatam	Ditto ditto.
	Diamond Harbour	11- 3 A.M. of ditto	10-50 A.M. of ditto.	Vizagapatam	Ditto ditto.
	Saugor Island	11- 5 A.M. of ditto	10-40 A.M. of ditto.	Coconada	Ditto ditto.
	Chandbali	11-20 A.M. of ditto	3-45 P.M. of ditto.	Masulipatam	Ditto ditto.
	Balasore	2-30 P.M. of ditto	1 P.M. of ditto.	Madras	11-4 A.M. of 19th; 10-40 A.M. of 20th; 10-30 A.M. of 21st; 11-47 A.M. of 22nd September.
	False Point	11-15 A.M. of ditto	11-25 A.M. of ditto.	Negapatam	11-4 A.M. of 19th; 10-28 A.M. of 20th; 10-30 A.M. of 21st; 10 A.M. of 22nd September.
	Puri	12-10 P.M. of ditto	1-33 P.M. of ditto.	Tuticorin	Ditto ditto.
				Pamban	Ditto ditto.
				Colombo	11-13 A.M. of 19th; 10-35 A.M. of 20th; 10-30 A.M. of 21st; 10 A.M. of 22nd September.
				Tavoy	11-26 A.M. of 19th; 11-1 A.M. of 20th; 10-30 A.M. of 21st; 10-55 A.M. of 22nd September.
				Mergui	Ditto ditto.
				Moulmein	11-26 A.M. of 19th; 11-1 A.M. of 20th; 10-30 A.M. of 21st; 10 A.M. of 22nd September.
				Rangoon	Ditto ditto.
				Bassein	Ditto ditto.
				Akyab	Ditto ditto.
4	.....	.....	.....	Gopalpur	10-45 A.M. of 14th; 8-37 A.M. of 15th October.
				Bimlipatam	Ditto ditto.
				Vizagapatam	Ditto ditto.
				Coconada	Ditto ditto.
				Masulipatam	Ditto ditto.
5	Calcutta	11-57 A.M. of 15th Nov.	10-15 P.M. of 17th Nov.	Calcutta*	10-30 A.M. of 15th; 10-23 A.M. of 18th November.
	Budge-Budge	12-30 P.M. of ditto	10-20 P.M. of ditto.	Akyab	10-15 A.M. of 17th; 9-57 A.M. of 18th November.
	Mud Point	11-35 A.M. of ditto	9-34 P.M. of ditto.	Gopalpur	10-48 A.M. of 14th; 11-25 A.M. of 15th; 10-18 A.M. of 16th November.
	Diamond Harbour	11-30 A.M. of ditto	9-33 P.M. of ditto.	Bimlipatam	Ditto ditto.
	Saugor Island	11-40 A.M. of ditto	9-25 P.M. of ditto.	Vizagapatam	10-10 A.M. of 13th; 10-20 A.M. of 14th; 11-25 A.M. of 15th; 10-18 A.M. of 16th November.
	Chandbali	10-33 A.M. of ditto	7 P.M. of ditto.	Coconada	Ditto ditto.
	Balasore	1- P.M. of ditto	6 P.M. of ditto.	Masulipatam	Ditto ditto.
	False Point	8-10 P.M. of ditto	6-37 P.M. of ditto.	Madras	Ditto ditto.
	Puri	10-40 A.M. of ditto	7-33 P.M. of ditto.	Negapatam	Ditto ditto.
	Chittagong	1 P.M. of 17th Nov.	Noon of 18th Nov.		
6	Calcutta	11-10 A.M. of 25th Nov.	3-15 P.M. of 26th Nov.	Calcutta	(a) 11-27 A.M. of 25th; (a) 6-44 and 9-56 A.M. of 26th; (b) 10-8 A.M. of 26th; (a) 6-44 A.M. of 27th November.
	Budge-Budge	11- A.M. of ditto	4-15 P.M. of ditto.	.....	
	Mud Point	11- 5 A.M. of ditto	6-50 A.M. of 27th Nov.	Chandbali	12-10 P.M. of 25th November.
	Diamond Harbour	10-50 A.M. of ditto	3-10 P.M. of 26th Nov.	Balasore	Ditto ditto.
	Saugor Island	11- 4 A.M. of ditto	6-55 A.M. of 27th Nov.	False Point	Ditto ditto.
	Chandbali	10-32 A.M. of ditto	6 A.M. of 28th Nov.	Puri	Ditto ditto.
	Balasore	1 P.M. of ditto	6 A.M. of 27th Nov.	Chittagong	12-10 P.M. of 25th; 10-45 A.M. of 26th November.
	False Point	11-37 A.M. of ditto	6-40 A.M. of ditto.	Rangoon	10-31 A.M. of 25th November.
	Puri	10-48 A.M. of ditto	8-27 A.M. of ditto.	Gopalpur	9-40 A.M. of 24th; 10-31 A.M. of 25th; 10-20 A.M. of 26th November.
	Cittagong	12-20 P.M. of ditto	7 A.M. of ditto.	Bimlipatam	Ditto ditto.
	Narayanganj	12-15 P.M. of 26th Nov.	7-35 A.M. of ditto.	Vizagapatam	Ditto ditto.
				Coconada	Ditto ditto.
				Masulipatam	Ditto ditto.
				Madras	Ditto ditto.
				Negapatam	Ditto ditto.
				Colombo	2-55 P.M. of 24th; 10-41 A.M. of 25th November.
7	.....	.....	.....	Madras	10 A.M. of 6th; 10-4 A.M. of 7th; 10 A.M. of 8th; 10-20 A.M. and 3-30 P.M. of 9th December.
				Negapatam	Ditto ditto.
				Tuticorin	Ditto ditto.
				Pamban	Ditto ditto.
				Colombo	10-7 A.M. of 6th; 10-24 A.M. of 7th; 10-18 A.M. of 8th; 10-25 A.M. and 3-44 P.M. of 9th December.

* In column 5 of the above table "Calcutta" indicates both the Port Officer, Calcutta, and the Deputy Director, Indian Marine, Government Dockyard, Kidderpore, Calcutta.

(a) To Port Officer, Calcutta, and Deputy Director, Indian Marine, Kidderpore.

(b) To Deputy Port Conservator, Calcutta.

30. The thanks of the Department are due to the tea and indigo planters to the Moravian Missionaries at Pedong, and to Mr. V. C. Henderson of Yatung (in Tibet) who have kindly continued to send rainfall returns during the past year, to the Surveyor-General, Ceylon, for sending meteorological observations taken at Colombo and Trincomallee for the daily weather report, and to Messrs. Mackinnon Mackenzie & Company, Agents of the British India Steam Navigation Company for allowing the commanders of their vessels to telegraph summaries of the weather experienced during their voyages.

31. *Office Establishment.*—The various members of my office establishment gave me full satisfaction throughout the year.

METEOROLOGICAL OFFICE, BENGAL,
The 29th May 1902.

C. LITTLE,
Meteorological Reporter to the Govt. of Bengal.

RETURN OF JOINT-STOCK COMPANIES FOR THE YEAR 1901-1902.

No. I.

Abstract of Joint-stock Companies for the year 1901-1902.

	Companies divided into shares.			Companies limited by guarantee *i.e.*, possessing no capital paid up.	
	Number of Companies.	Nominal Capital.	Paid-up Capital.	Number of Companies.	Number of members.
1	2	3	4	5	6
		Rs.	Rs.		
Working at the close of 1900-1901	398	19,84,49,534	15,47,11,734	5	2,520
Registered during 1901-1902	34	1,48,04,000	30,83,000	1	Unlimited.
Capital increased during 1901-1902	72	18,57,000	73,05,316	.....	.....
Capital decreased 1901-1902	.....	.....	.....	.....	.....
Ceased to work during 1901-1902	19	24,58,000	18,30,673	1	2,000
Working at the close of 1901-1902	413	21,26,52,534	16,32,69,377	5	520

B. L. CHANDRA,

Registrar of Companies.

No. II.

Joint-stock Companies registered during the year 1901-1902.

Number on the register.	Date of registration.	Classification and Name of Company.	Objects of Company.	Nominal Capital.	Paid-up Capital.	Situation of the Registered Office.
1	2	3	4	5	6	7
		I.—Banking and Loan Companies.		Rs.	Rs.	
1504	1st August 1901	Stein Forbes & Co., Ld. ...	Banking Business	3,00,000	....	No. 12 Dalhousie Square, Calcutta.
1516	28th November „	Basirhat Loan Co., Ld. ...	Do. and money lending business ...	20,000	...	
1517	4th December „	Brahmanbaria Loan Co., Ld. ...	Do. and Loan business ...	20,000	...	
1522	13th March 1902	Purnea Central Bank, Ld. ...	Do. and Loan business with the object of securing economic improvement of the masses especially the agriculturists.	5,000	...	
			Total of Banking and Loan Companies	3,45,000	...	
		II.—Trading Companies.				
		(a) Merchants and Traders.				
1486	15th April. 1901	Bengal Chemical and Pharmaceutical Works, Ld.	To manufacture chemicals and drugs ...	25,000	...	No. 91 Upper Circular Road, Calcutta.
1509	23rd August „	A Ukil & Co., Ld.	General Agents	2,00,000	...	No. 36 Grey Street, Calcutta.
1512	5th October „	Pioneer Building Syndicate, Ld.	Builders and Contractors, etc. ...	1,00,000	...	No. 1, Hare Street, Calcutta.
1513	11th „ „	Belliaghatta Trading Co., Ld. ...	Traders and Commission Agents ...	20,000	...	No. 12, Chaulpati Road, Baliaghatta, Suburbs of Calcutta.
1520	25th February 1902	R. Glen & Co., Ld.	Jute Merchants, Balers, etc. ...	1,00,000	...	No. 102, Clive Street, Calcutta.
1523	21st March „	Assam Pioneer and Manufacturing Co., Ld.	General Traders, etc.	50,000	..	No. 36, Grey Street, Calcutta.
				4,95,000	...	

			(b) Railways and Tramways.				
1501	19th July	1901	Bukhtiarpur-Bihar Light Railway Co., Ld.	Constructing tramway between the station of Bukhtiarpur and the town of Bihar.	8,00,000	...	No. 34, Jackson Ghat Street, Calcutta.
			(c) Shipping Landing and Warehousing.				
1489	27th April	„	Hooghly Docking and Engineering Co., Ld.	Proprietors of docks, ship and boat builders and engineers.	5,00,000	...	Ditto ditto.
				Total of Trading Companies ...	17,95,000	...	
			III.—Mills and Presses.				
			(a) Cotton and Jute Screws and Presses.				
1507	16th August	1901	Narayanganj Co., Ld. ...	Pressing jute, hemp, cotton, etc. ...	5,00,000	...	No. 1, Clive Row, Calcutta.
			(b) Other Mills and Presses.				
1497	13th June	„	Ramkristopur Rice Mills, Ld. ...	Husking paddy and making rice by means of machinery.	20,000	8,000	
				Total of Mills and Presses ...	5,20,000	8,000	
			IV.—Tea Companies.				
1493	30th May	1901	Nagri Farm Tea Co., Ld. ...	Cultivators and manufacturers of tea ...	3,00,000	...	No. 6, Strand Road, Calcutta.
1494	Do.	„	Chamong Tea Co., Ld. ..	Ditto ditto ...	2,80,000	...	Ditto ditto.
1498	29th June	„	Darjeeling-Himalayan Tea Co., Ld.	Ditto ditto ...	1,40,000	...	No. 31, Dalhousie Square, Calcutta
					7,20,000	...	
			V.—Mining and Quarrying Companies.				
			(a) Coal.				
1487	19th April	1901	Burrakur Coal Co., Ld. ...	Coal business	30,00,000	23,25,000	No. 101-1, Clive Street, Calcutta.
1490	7th May	„	Central Kurkend Coal Co., Ld. ...	Ditto	1,50,000	1,50,000	No. 28, Dalhousie Square, Calcutta.
1492	18th „	„	Marine Coal Co., Ld. ...	Ditto	1,50,000	...	No. 31, Dalhousie Square, South, Calcutta.
1495	31st „	„	Jumoni Coal Co., Ld. ...	Ditto	14,00,000	...	No. 101-1, Clive Street, Calcutta.
1496	31st „	„	Bhaskajuri Coal Co., Ld. ...	Ditto	7,50,000	...	Ditto ditto.

Number on the register.	Date of registration.	Classification and name of Company.	Objects of Company.	Nominal Capital.	Paid-up Capital.	Situation of the Registered Office.
1	2	3	4	5	6	7
		V.—Mining and Quarrying Companies—*concld.*		Rs.	Rs.	
		(*a*) *Coal—concld.*				
1499	3rd July 1901	Atlas Coal Co., Ld.	Coal business	5,00,000	...	No. 7-1, Lyons Range, Calcutta.
1502	19th „ „	Hurriladih Coal Co., Ld. ...	Ditto	8,00,000	...	No. 2, Clive Ghat Street, Calcutta.
1503	29th „ „	Jamgram Coal Co., Ld. ...	Ditto	7,50,000	...	
1505	7th August „	Damuda Valley Coal Syndicate, Ld.	Ditto	24,000	...	
1508	21st „ „	Gopalichuck Coal Co , Ld. ...	Ditto	6,00,000	6,00,000	No. 31, Dalhousie Square. Calcutta.
1510	24th September „	Aldih Coal Co., Ld.	Ditto	8,00,000	...	No. 2, Clive Ghat Street, Calcutta.
1511	24th „ „	Palamau Coal Co., Ld. ...	Ditto	5,00,000	...	No. 101-1, Clive Street, Calcutta.
1521	4th March 1902	Bengal Jherria Coal Co., Ld. ...	Ditto	3,00,000	...	No. 28, Dalhousie Square, Calcutta
		(*b*) *Others.*		97,24,000	30,75,000	
1488	19th April 1901	Pandra Prospecting and Mining Co., Ld.	Mining Coals, minerals and metals, etc.	5,00,000	...	
1518	19th December „	Bikanir and Dehra Dun Prospecting and Mining Co., Ld.	Prospecting and Mining	5,00,000	...	No. 101-1, Clive Street, Calcutta.
				10,00,000	...	
			Total of mining and quarrying Companies.	1,07,24,000	30,75,000	
		VI.—Other Companies.				
1506	15th August 1901	Indigo Manures Supply Co., Ld.	Manufacturing artificial, chemical and other manures.	2,00,000	...	No. 12, Mission Row, Calcutta.
1514	1st November „	Bengal Glass Co., Ld. ...	Manufacturing glass, glass-ware, etc. ...	5,00,000	...	
				7,00,000	...	

B. L. CHANDRA,
Registrar of Companies.

No. III.

Companies limited by guarantee, registered during the year 1901-1902.

Number on the register.	Date of registration.	Classification and name of Company.	Objects of Company.	Number of members.	Situation of the Registered Office.
1	2	3	4	5	6
		I.—Insurance Companies.			
1515	28th November 1901	Writers' Buildings Provident Benefit Fund, Ld.	To afford some relief to the subscribers after retirement or to other nominees after death.	Unlimited members.	Writers' Buildings, Bengal Secretariat, Calcutta.

B. L. CHANDRA,

Registrar of Companies.

No. IV.

Joint-Stock Companies that have increased their Capital during the year 1901-1902.

Number on the register.	Date of registration.	Classification and name of Company.	Date of increase.	Previous Capital.		Present Capital.		Difference.	
				Nominal.	Paid-up.	Nominal.	Paid-up.	Nominal.	Paid-up.
1	2	3	4	5	6	7	8	9	10
		I.—Banking Companies.		Rs.	Rs.	Rs.	Rs.	Rs.	Rs.
		(a) Banking and Loan Companies.							
301	5th November 1874.	Bogra Loan Office, Ld. ...	1st July 1901	20,000	13,340	20,000	13,360	...	20
326	26th September 1875.	Nasirabad Loan Office, Ld. ...	13th June „	50,000	28,180	50,000	28,190	...	10
478	8th August 1883	Pabna Bank, Ld.	2nd July „	20,000	19,000	20,000	20,000	...	1,000
509	2nd March 1885	Noakhali Loan Office, Ld. ...	22nd April „	20,000	13,640	20,000	15,000	...	1,360
546	15th September 1887.	Khulna Loan Co., Ld. ...	30th September 1901. 5th February 1902.	15,000	15,000	45,000	44,660	30,000	29,660
907	26th July 1894	Nilphamari Loan Office, Ld. ...	5th August 1901	50,000	20,000	50,000	30,000	...	10,000
959	20th December 1894.	Gaya Loan Office, Ld. ...	17th February 1902.	50,000	20,975	50,000	21,132	...	157
983	8th April 1895	Ghatail Loan and Insurance Co., Ld.	5th July 1901	20,000	4,320	20,000	4,350	...	30
1128	18th June 1896	Kurigram Bank, Ld.	29th „ „	20,000	15,880	20,000	16,000	...	120
1137	8th July „	Bhowanipur Banking Corporation, Ld.	19th March 1902	1,00,000	25,800	1,00,000	49,550	...	23,750
1144	18th „ „	Ulipore Loan Co., Ld. ..	27th July 1901	20,000	18,938	20,000	19,600	...	662
1292	28th November 1896.	Sylhet National Co., Ld. ...	17th June „	1,00,000	6,910	1,00,000	10,870	...	3,960
1305	12th December 1896.	Kumarkhali Banking Corporation, Ld.	25th „ „	20,000	10,640	20,000	10,650	...	10
1439	17th October 1898	Pabna Model Co., Ld. ...	24th „ „	1,00,000	3,160	1,00,000	7,670	...	4,510

		(c) Insurance Companies.						
982	5th April 1895	Tippera Jiban Bima Co., Ld. ...	13th „ „	12,000	1,000	12,000	1,130	... 130
1357	19th February 1897.	Damurhuda Paribarik Sansthan Co., Ld.	25th November 1901.	9,000	2,537	9,000	2,612	.. 75
		II.—Trading Companies.						
		(a) Merchants and Traders.						
702	10th September 1891.	Tangail Trading Co., Ld. ...	25th June 1901	50,000	4,160	50,000	4,360	... 200
942	12th November 1894.	Jalpaiguri Club Co., Ld. ...	21st February 1902.	75,000	50,520	75,000	56,600	... 6,080
995	5th July 1895	Shalimar Works, Ld.	4th June 1901	3,20,000	2,68,000	3,20,000	3,20,000	... 52,000
1011	20th August „	Bharat Samiti, Ld.	9th July „	5,00,000	71,747	5,00,000	88,322	... 16,575
1031	4th November „	Chota Nagpur Trading Co., Ld. ...	26th September 1901.	20,000	15,060	20,000	15,280	... 220
1060	5th February 1896	Sylhet Trading Co., Ld. ...	4th November 1901.	1,00,000	7,010	1,00,000	7,350	... 340
1102	11th May „	Assam Valley Trading Co., Ld. ...	26th April 1901	1,00,000	19,449	1,00,000	54,000	... 34,551
1354	17th February 1897.	Ranchi Trading Corporation, Ld.	15th October 1901.	20,000	6,450	20,000	6,620	... 170
1399	6th September 1897.	Cachar Club Co., Ld.	27th June 1901	40,000	24,480	40,000	39,900	... 15,420
1400	7th September 1897.	Svadeshi Bhandar, Ld. ...	21st „ „	20,000	402	20,000	6,442	... 6,040
1425	21st May 1898 ...	Atkinson Brothers, Ld. ...	19th November 1901.	3,00,000	...	3,00,000	2,00,000	... 2,00,000
1446	16th February 1899.	Chota Nagpur Timber and Trading Co., Ld.	15th January 1902.	2,00,000	75,000	2,00,000	1,00,000	... 25,000
		(b) Railways and Tramways.						
613	23rd June 1890	Bengal Provincial Railway Co., Ld.	13th July 1901	11,00,000	8,48,721	11,00,000	8,48,774	... 53
994	19th „ 1895	Howrah-Sheakhala Light Railway Co., Ld.	21st May „ 8th August „	5,40,000	5,40,000	6,40,000	6,00,000	1,00,000 60,000
1326	7th January 1897	Brahmaputra-Sultanpur Branch Railway Co., Ld.	12th July „	36,00,000	24,58,200	36,00,000	29,99,940	... 5,41,740
		(c) Co-operative Association.						
617	4th August 1890	Jamalpur Co-operative Stores Association, Ld.	6th September 1901.	8,000	7,960	8,000	7,971	... 11

Number on the register.	Date of registration.	Classification and name of Company.	Date of increase.	Previous Capital.		Present Capital.		Difference.	
				Nominal.	Paid-up.	Nominal.	Paid-up.	Nominal.	Paid-up.
1	2	3	4	5	6	7	8	9	10
				Rs.	Rs.	Rs.	Rs.	Rs.	Rs.
		III.— Mills and Presses.							
		(a) Cotton Mills.							
1127	15th June 1896	Sri Gungaji Cotton Mills Co., Ld.	4th November 1901.	10,00,000	4,63,015	10,00,000	4,68,415	...	5,400
1278	10th November 1896.	Dunbar Mills, Ld.	12th March 1902	50,00,000	14,00,000	50,00,000	19,00,000	...	5,00,000
1443	9th November 1898.	Serampore Cotton Mills, Ld. ...	17th October 1901	9,00,000	6,00,000	9,00,000	8,55,900	...	2,55,900
		(b) Jute Mills.							
405	5th October 1880	Union Jute Co., Ld. ...	10th April 1901 12th February 1902.	12,00,000	9,00,000	18,00,000	17,66,975	6,00,000	8,66,975
585	28th November 1889.	Sibpur Jute Manufacturing Co., Ld.	15th March 1902	17,50,000	17,49,050	17,50,000	17,49,550	...	500
908	1st August 1894	Clive Mills Co., Ld	11th April 1901	16,00,000	5,34,100	16,00,000	11,65,000	...	6,30,900
1012	30th August 1895	Standard Jute Co., Ld. ...	12th February 1902.	23,00,000	13,00,000	23,00,000	23,00,000	...	10,00,000
1021	21st September 1895.	Alliance Jute Mills Co., Ld. ...	24th June 1901 13th January 1902	11,00,000	11,00,000	15,00,000	13,53,000	4,00,000	2,53,000
1029	29th October 1895	Gauripur Co., Ld.	26th February 1902.	35,00,000	25,07,300	35,00,000	25,50,000	...	42,700
1457	14th September 1899.	Kinnison Jute Mills Co., Ld. ...	31st October 1901	20,00,000	11,22,000	20,00,000	12,50,000	...	1,27,500
		(c) Mills other than Cotton, Jute, Wool, Silk, Hemp, &c.							
1454	15th July 1899	Monarch Flour Mills Co., Ld. ...	26th April 1901	3,00,000	...	3,00,000	2,49,992	...	2,49,992

		IV.—Tea and other Planting Companies.						
		(a) Tea.						
513	16th May 1885	Arya Tea Co., Ld.	4th June 1901	84,980	59,990	84,980	84,980	...	24,990
823	16th February 1894.	Choonabhutti Tea Co., Ld. ..	20th March 1902	4,00,000	2,00,000	4,00,000	2,47,000	...	47,000
834	17th March 1894	Hattikhira Tea Co., Ld. ...	6th July 1901	9,00,000	8,14,600	9,00 000	8,85,193	...	70,593
993	18th June 1895	Banarhat Tea Co., Ld.	9th April 1901 22nd March 1902	5,00,000	5,00,000	10,00,000	6,32,800	5,00,000	1,32,800
1041	14th December 1895.	Birpara Tea Co., Ld.	8th June „	7,50,000	4,50,000	7,50,000	4,85,000	...	35,000
1049	11th January 1896.	Phaskawa Tea and Co., Ld. ...	6th June 1901	2,50,000	2,12,000	2,50,000	2,12,500	...	500
1089	10th April 1896	Indeswar Tea and Trading Co., Ld	1st „ „	1,00,000	65,975	1,00,000	78,960	...	12,985
1242	24th July „	Hantapara Tea Co., Ld. ...	20th „ „	4,50,000	4,50,000	5,25,000	4,50,000	75,000	...
1270	2nd November 1896.	Pabbojan Tea Co., Ld. ...	14th November 1901.	3,20,000	2,48,000	3,70,000	2,48,000	50,000	...
1391	29th May 1897	Tingalibam Co., Ld.	4th May 1901	2,50,000	2,19,000	2,50,000	2,31,500	...	12,500
1434	29th August 1898	Dhoedaam Tea Co., Ld. ...	6th March 1902	2,60,000	2,60,000	3,12,000	2,60,000	52,000	...
1448	18th March 1899	Simul Bari Tea Co., Ld.	6th July 1901	50,000	30,900	50,000	40,000	...	9,100
1463	15th February 1900	Dimakusi Tea Co., Ld. ...	9th January 1902 4th May 1901	2,00,000	...	2,50,000	1,20,000	50,000	1,20,000
1449	28th April 1900	Margarets Hope Tea Co., Ld. ...	26th April „	3,00,000	...	3,00,000	3,00,000	...	3,00,000
1472	13th July „	Atiabari Tea Co., Ld. ...	13th July „	75,000	...	75,000	8,610	...	8,610
1473	3rd September „	Bhatcowa Tea Co., Ld. ...	18th March 1902	3,00,000	29,875	3,00,000	73,402	...	43,527
1475	9th November 1900.	New Killcott Tea Co., Ld. ...	27th March „	2,00,000	...	2,00,000	2,00,000	...	2,00,000
1477	17th November 1900.	Nagrijuli Tea Co., Ld. ...	21st May 1901	4,00,000	...	4,00,000	61,250	...	61,250
1481	24th January 1901	New Cinnatalliah Tea Co., Ld. ...	2nd July „	2,00,000	...	2,00,000	2,00,000	...	2,00,000
		V.—Mining and Quarrying Companies.						
		(a) Coal.						
255	8th April 1873	Raniganj Coal Association, Ld. ...	24th June 1901	9,00,000	8,99,500	9,00,000	9,00,000	...	500
996	5th July 1895	Jherria Colliery Co., Ld. ...	30th April „	3,00,000	2,45,000	3,00,000	2,50,000	...	5,000
1112	23rd May 1896	Sitarampore Coal Co., Ld. ...	15th August „	3,00,000	2,24,000	3,00,000	2,25,000	...	1,000
1129	18th June „	New Manbhum Coal Co., Ld. ...	10th December 1901.	3,00,000	2,24,640	3,00,000	2,40,000	...	15,360
1169	12th August „	Reliance Coal Co., Ld. ...	14th March 1902	6,00,000	2,00,000	6,00,000	3,74,700	...	1,74,700
1453	13th June 1899	Burna Coal Mines Co., Ld. ...	31st July 1901	1,50,000	48,500	1,50,000	62,000	...	13,500

Number on the register.	Date of registration.	Classification and name of Company.	Date of increase.	Previous Capital.		Present Capital.		Difference.	
				Nominal.	Paid-up.	Nominal.	Paid-up.	Nominal.	Paid-up.
1	2	3	4	5	6	7	8	9	10
				Rs.	Rs.	Rs.	Rs.	Rs.	Rs.
		V.—Mining and Quarrying Companies—*concld.*							
		(*a*) *Coal*—concld.							
1471	26th June 1900	Seebpore Coal Co., Ld. ...	19th February 1902.	4,00,000	2,79,880	4,00,000	2,80,960	...	1,080
1478	7th December ,,	Standard Coal Co., Ld. ...	4th March 1902	8,00,000	...	8,00,000	8,00,000	...	8,00,000
		(*b*) *Others.*							
1464	17th February 1900.	Chota Nagpur Mica Syndicate, Ld.	8th May 1901 ...	1,00,000	...	1,00,000	45,000	...	45,000
		VI.—Other Companies.							
1468	27th April 1900	Khorooria Mejajillah Zemindary Syndicate, Ld.	7th September 1901.	90,000	...	90,000	3,600	...	3,600

B. L. CHANDRA,

Registrar of Companies.

No. V.

Joint-Stock Companies that have reduced their Capital during the year 1901-1902.

Nil.

B. L. CHANDRA,
Registrar of Companies.

No. VI.

Joint-Stock Companies that having ceased to work, have gone into liquidation, or have been finally dissolved (or otherwise become defunct) during the year 1901-1902.

Number on the register.	Date of registration.	Classification and name of Company.	Nominal capital.	Paid-up capital.	Date of going into liquidation.	Date of final dissolution.
1	2	3	4	5	6	7
		I.—Banking, Loan, and Insurance Companies.	Rs.	Rs.		
		(a) Banking and Loan Companies.				
1117	2nd June 1896 ...	Kotesvar Loan Co., Ld.	20,000	2,288	20th August 1901.	
1404	22nd September 1897 ...	Narandiya Nagarbari Daulatpur Dhana Bhandar Samiti, Ld.	20,000	880	.....	Defunct.
		(b) Insurance Companies.				
1330	15th January 1897 ...	Mahisakhacha O Govardhana Sulava Sansarik Bhandar, Ld.	5,000	...	.....	Do.
1340	26th „ „ ...	Rangpur Munsipada Sarvavidha Sahayya Co., Ld.	15,000	...	.....	Do.
1373	2nd April „ ...	Machhari Sulava Sahayya Samiti Co., Ld. ...	20,000	...	.....	Do.
1420	16th March 1898 ...	Harmasra Mahada Sadharan Dayamocana Co, Ld.	5,000	...	.....	Do.
		II.—Trading Companies.				
		(a) Merchants and Traders.				
1036	26th November 1895 ...	Mrittinga Star Co., Ld.	20,000	3,207	.....	Do.
1451	16th May 1899 ...	Bathgate, Pim and Co., Ld.	3,00,000	1,75,000	1st July 1901.	
1466	8th March 1900 ...	Creet Brothers, Ld.	2,00,000	...	18th December 1901.	
		(b) Navigation.				
1461	6th January 1900 ...	Kapotaksa Steam Navigation Co., Ld. ...	10,000	1,198	8th July 1901 ...	9th October 1901.

			III.—Mills and Presses.				
			(a) Cotton and Jute Screws and Presses.				
480	13th August 1883	...	India Pressing Co., Ld.	1,50,000	1,50,000	24th June 1901.	
			(b) Other Mills and Presses.				
1022	5th October 1895	...	Shalimar Mills Co , Ld.	3,00,000	2,02,000	11th October 1900 ...	9th April 1901.
1181	25th August 1896	...	Bengal Saw Mills Co., Ld.	80,000	80,000	23rd August 1901.	
1452	27th May 1899	...	Mogra Bone Mills Co., Ld.	1,00,000	20,600	10th March 1902.	
			IV.—Tea Companies.				
316	1st May 1875	...	Sapakati Tea Co., Ld.	88,000	88,000	19th December 1901.	
518	29th December 1885	...	Killcott ditto	2,00,000	2,00,000	19th November 1900 ...	16th October 1901.
1288	24th November 1896	...	Potong ditto	2,00,000	60,700	9th March 1901 ...	22nd March 1901.
			V.—Coal Companies.				
			(a) Coal.				
320	19th June 1875	...	Burrakur Coal Co., Ld.	3,00,000	3,00,000	20th April 1901.	
730	2nd September 1892	...	South Burrakur Coal Co., Ld.	5,00,000	5,00,000	7th August „	
1010	15th August 1895	...	Victoria Coal Mining Co., Ld.	1,00,000	9,500	.....	Defunct.
1094	21st February 1896	...	Great Eastern Coal Co., Ld.	5,00,000	5,00,000	6th July 1901.	
			(b) Others.				
657	29th November 1890	...	Palganj Gold Prospecting Syndicate, Ld. ...	3,00,000	3,00,000	5th July 1899 ...	7th February 1902.
			VI.—Other Companies.				
1485	23rd March 1901	...	Calcutta Tile and Stone Co., Ld. ...	25,000	...	14th September 1901 ...	3rd December 1901.

B. L. CHANDRA,
Registrar of Companies.

No. VII.

Companies limited by guarantee, that having ceased to work, have gone into liquidation, or have been finally dissolved (or otherwise become defunct) during the year 1901-1902.

Number on the register.	Date of registration.	Classification and name of Company.	Number of members.	Date of going into liquidation.	Date of final dissolution.
1	2	3	4	5	6
		I.—Insurance Companies.			
1435	21st September 1898	Enginemen and Firemen's Union in India, Ld.	2,000	.....	Defunct.

B. L. CHANDRA,
Registrar of Companies.

No. VIII.

List of Joint-Stock Companies at work on 31st March 1902.

Classification of Company.	Total number.	Aggregate nominal capital.	Aggregate paid-up capital.
1	2	3	4
		Rs.	Rs.
I.—Banking, Loan and Insurance Companies—			
(*a*) Banking and Loan Companies	47	3,32,40,000	2,95,44,181
(*b*) Insurance Companies	14	75,39,250	7,37,070
Total of Banking, Loan, and Insurance Companies ...	61	4,07,79,250	3,02,81,251
II.—Trading Companies—			
(*a*) Merchants and Traders	59	1,07,95,700	82,29,478
(*b*) Navigation	3	26,40,000	16,40,000
(*c*) Railways and Tramways	14	1,69,15,000	1,44,57,834
(*d*) Co-operative Associations	11	3,04,400	2,86,981
(*e*) Shipping, Landing, and Warehousing	3	18,00,000	13,00,000
Total of Trading Companies ...	90	3,24,55,100	2,59,14,293
III.—Mills and Presses—			
(*a*) Cotton Mills	8	1,25,75,000	85,99,315
(*b*) Jute Mills	20	3,98,92,250	3,32,49,375
(*c*) Mills for Cotton, Jute, Wool, Silk, Hemp, etc.	4	25,00,000	10,81,552
(*d*) Cotton and Jute Screws, and Presses	10	32,10,000	25,46,100
(*e*) Other Mills and Presses	10	55,20,000	50,53,792
Total of Mills and Presses ...	52	6,36,97,250	5,05,30,134
IV.—Tea and other Planting Companies—			
(*a*) Tea	132	3,77,44,180	3,29,89,047
(*b*) Others	4	10,92,500	9,89,775
Total of Tea and other Planting Companies ...	136	3,88,36,680	3,39,78,822

Classification of Company.	Total number.	Aggregate nominal capital.	Aggregate paid-up capital.
1	2	3	4
		Rs.	Rs.
V.—Mining and Quarrying Companies—			
(*a*) Coal	41	2,46,86,000	1,58,81,960
(*b*) Others	16	62,05,000	20,18,334
Total of Mining and Quarrying Companies ...	57	3,08,91,000	1,79,00,294
VI.—Ice-manufacturing Companies	6	8,33,254	7,74,670
VII.—Sugar-manufacturing Companies	2	21,00,000	21,00,000
VIII.—Other Companies	9	30,60,000	17,89,913

B. L. CHANDRA,

Registrar of Companies.

No. IX.

List of Companies limited by Guarantee at work on 31st March 1902.

Classification of Company.	Total number.	Number of members.
1	2	3
I.—Insurance Companies	2	20
II.—Trading ditto	1	100
III.—Other ditto	2	400

B. L. CHANDRA,

Registrar of Companies.

No. X.

Statement of fees realised during the year 1901-1902.

1	2	3
	Rs. A. P.	
Amount of fees realised under Act VI of 1882	14,511 0 0	
Ditto ditto XXI of 1860	307 0 0	
Ditto ditto XII of 1895	15 0 0	
Total ...	14.833 0 0	

B. L. CHANDRA,

Registrar of Companies.

RESOLUTION ON THE REPORT OF THE SANITARY COMMISSIONER, BENGAL, FOR THE YEAR 1901.

MUNICIPAL DEPARTMENT—SANITATION.

Darjeeling, the 26th June 1902.

RESOLUTION—No. 1112T.—M.

READ—

The Report of the Sanitary Commissioner, Bengal, for the year 1901.

Read again—

The Sanitary Commissioner's Report for 1900 and the Resolution of Government recorded on it.

The report of the Sanitary Commissioner for 1901 has been submitted punctually, and is prepared on the same lines as last year. Some of the tables, which were in the report for 1900, have been omitted, but there are still more than are required, about which separate orders will be given. It is the duty of the Sanitary Department not only to record facts as to outbreaks of epidemic and other diseases, but to inquire into their causes and to report on local conditions affecting health. The space made available by the omission of these tables could be profitably utilised in discussing the insanitary conditions of particular localities, in recording what has been done or attempted towards the introduction of preventive measures or in explaining why this is not possible. For instance, it is noted in paragraph 32 that the very high rate of mortality from small-pox in Cuttack is due to preventible causes. If this is so, the necessary measures for checking the disease might have been indicated. It is possible that the Sanitary Department is taking steps for this object, but there is no mention of this in the report.

2. *Vital Statistics.*—The rainfall of the year was scanty and unevenly distributed, and the agricultural outturn below the average in many districts. These conditions are to some extent reflected in the vital statistics, and the death-rate, though lower by 3·94 per mille than that of the year 1900, was higher by ·19 per mille than the average death-rate of the last five years, which is calculated on the census of 1891. On the other hand, the birth-rate has improved. It was 1·63 per mille higher than in 1900, calculated on the revised figures of population, and 1·77 per mille higher than the average of the last five years calculated on the figures of 1891. The census of 1901 has shown an increase of 5·1 per cent. in the population, and it appears that, in spite of famine and plague in the interval, the general health of the Province is not deteriorating.

The value of vital satistics depends upon the accuracy with which they are collected. The statistics of the past year were tested over a considerable area by the vaccination staff, who discovered that 3,867 births and 2,240 deaths had not been reported. This amounts to a percentage of 1·2 of births and ·98 of deaths for the area tested, and shows that the reporting staff do their work fairly well. The Magistrates of the districts mentioned in paragraph 7 of the report, where reporting was most defective, should take measures to improve this work.

3. *Principal diseases.*—The decrease in the general death-rate was due mainly to the comparative absence of cholera. In Orissa there was a severe outbreak, which is attributed to the short rainfall of 1901. This explanation is doubtful. It would appear that want of sanitary precautions in regard to the pilgrims and at local fairs was more responsible for the outbreak, and it is mentioned that the local authorities at Puri neglected to make proper arrangements at a local fair where the disease originated. It is also said that the District Board has disclaimed responsibility in the matter. The duties of District Boards to provide for the drainage, water-supply, and

conservancy staff at fairs were laid down in the Government Resolution of the 29th September 1891, and again in a circular of the 12th July 1893, and a report will be called for to explain why the rules there prescribed were not followed in Puri.

The number of anti-cholera inoculations was smaller than in 1900, owing to the smaller emigration. The results, however, so far as recorded, were satisfactory, as of the coolies exposed to the disease, 8·36 per cent. of uninoculated persons were affected, of whom 50 per cent. died, while of inoculated coolies, only 1·2 per cent. took the disease and none died. A larger number of persons of the non-emigrant class were inoculated than in 1900, and the work done reflects credit on the Assistant Surgeons who were employed.

4. There was a severe outbreak of small-pox during the year, and the mortality was higher than in any year since 1877. The subject will be dealt with more fully in the Vaccination Report, and it is only necessary to remark here that in Orissa, where the disease was most prevalent, it is said to be due largely to preventible causes, of which inoculation is the chief. The mortality from this cause among children was considerably smaller than in 1900 and 25 per cent. less than in 1899, but no explanation is suggested.

5. In accordance with the instructions of the Government of India, the returns under the head of plague have been separately classified. The number of attacks and deaths for the whole Province were 90,762 and 78,629, respectively, against 40,294 and 38,412 in the preceding year. The fall in the ratio of mortality from 95·74 to 86 63 indicates an improvement in registration, but the percentage is still higher than that which the experience of plague elsewhere has shown to constitute a normal rate. It is noticeable that the percentage of deaths to attacks in Calcutta was as high as 91·54, against 86·11 in the interior. The reason for this should be investigated. It is possibly due to the greater facilities for evacuation of houses in rural areas. The people in rural areas now understand the value of evacuation of infected houses and readily resort to it; and it is to be hoped that the advantages of disinfection will in time be similarly appreciated. It appears that disinfection was satisfactorily carried out in several large towns in Bihar, and Assistant Surgeons and others have been trained in this important work. Anti-plague inoculation was carried out on a considerable scale in Gaya and Patna, but the information as to results is unfortunately incomplete. The experiments of Major Drury and Captain Rogers, mentioned in paragraph 40, have been separately considered. The results are not in agreement with those obtained elsewhere, and the experiments are to be further tested. The Lieutenant-Governor, while unable on the experience gained in Bengal to accept the arguments of Major Dyson in favour of inoculation against disinfection, is far from wishing to discourage inoculation when it can be voluntarily carried out. That personal influence can achieve excellent results in this direction is shown in the case of Gaya, where 22,169 persons were inoculated during the year and only 418 deaths from plague occurred.

6. The portion of the report devoted to fever is not very interesting. It shows that the death-rate was a little higher than the average of the last ten years, though this may be accounted for by the inclusion of deaths from plague. There is nothing to indicate that any inquiries were made to show how far this was the case. The Lieutenant-Governor hopes that more information will be given, as promised, in future reports as to the comparative immunity from fever of particular areas, and that the causes of the severe outbreaks in particular localities, of which a long list is given in paragraph 46, will be more fully investigated. With regard to the type of fever prevailing, some information is given, but it is far from complete, and more scientific and exhaustive investigations are necessary to deal with the subject. Materials will, it is hoped, be shortly available in the Medical Histories of Districts which are under preparation in the Medical Department.

7. The deaths from dysentery and diarrhœa were fewer than in the previous year, but above the average of the preceding ten years. The greatest number of deaths from these causes occurred in towns—a result probably due to defective diagnosis in rural areas. Deaths from other causes decreased owing to the separate classification of plague.

8. *Sanitary Works.*—There was a considerable increase of expenditure on conservancy, drainage, and the treatment of the sick in municipalities. The expenditure on conservancy has increased since 1895 by over three lakhs of rupees. The list of works considered by the Sanitary Board during the year shows that progress is being made for the improvement of water-supply and drainage.

By order of the Lieutenant-Governor of Bengal,

E. W. COLLIN,

Offg. Secretary to the Govt. of Bengal.

WEATHER AND CROP REPORT.

For the week ending the 30th June 1902.

Burdwan.—Rainfall at Sadar 0·08, Kalna 0·76, Katwa 2·20, Raniganj 0·15. Weather cool and cloudy. Ploughing of land and sowing of paddy continue. Condition of cattle good. Fodder and water sufficient. Common rice selling at 12 seers per rupee.

Birbhum.—Rainfall at Sadar ·21, Rampur Hât 0·38. Want of sufficient rain has caused damage to paddy seedlings and sugarcane. Common rice sells at Sadar at 12 seers per rupee. Fodder sufficient.

Bankura.—Rainfall at Sadar ·20. Weather hot and cloudy. Rain badly wanted. Seedlings of paddy withering at some places for want of rain. Sugarcane growing well. Fodder and water sufficient. Common rice selling at about 14 seers per rupee.

Midnapore.—Rainfall at Sadar 1·87', Ghatal 0·99, Contai and Tamluk nil. Rain badly wanted for paddy in Contai and Tamluk. Weather hot and cloudy. Jute doing well State of bombyx mori fair at Ghatal. Fodder and water sufficient. Common rice sells as follows:—

		Srs.	ch.	
Sadar	... ...	12	8	per rupee.
Contai	... ...	12	9	
Tamluk	... ...	11	12	
Ghatal	... ...	12	5	

Hooghly.—Rainfall at Sadar 0·36, Serampore ·13, Arambagh 2·00. Ploughing for sowing of *aman* continues. Weeding of *aus*, jute, and sugarcane progressing. Rain wanted. Fodder and water sufficient. Common rice sells as follows:—

		Srs.	ch.	
Sadar	... ...	10	0	per rupee.
Serampore	... ...	10	11	
Arambagh	... ...	12	3	

Howrah.—Rainfall at Sadar 1·50, Ulubaria ·96. Fall general on the 22nd and 23rd. Fall recorded at Sadar also on the 27th. It was much needed and was beneficial to the paddy seedlings. Sowing of *aman* for seedlings almost finished. Agricultural prospects continue to be fair. Weather unduly warm. Fodder and water sufficient. No cattle-disease. Common rice sells at 11 seers per rupee everywhere in the district.

24-Parganas.—Rainfall at Sadar 1·53, Barasat 0·10, Basirhat 0·00, Diamond Harbour 1·59. Weather hot and cloudy. State and prospects of standing crops good excepting in Barasat and Basirhat, where there has been some deterioration from want of rain. Transplantation of *aman* and weeding of *aus* and jute continue. Common rice sells at 12 seers per rupee. Condition of cattle good. Supply of fodder and water sufficient.

Nadia.—Rainfall at Sadar 1·80, Ranaghat 0·03, Chuadanga 0·35, Meherpur 1·21, Kushtia 0·52. Weather hot and cloudy. Standing crops suffering in parts of the district for want of rain. Fodder and water sufficient everywhere. Common rice sells as follows:—

		Srs.	ch.	
Sadar	... ...	11	0	per rupee.
Ranaghat	... ...	11	0	
Chuadanga	... ...	11	4	
Meherpur	... ...	10	11	
Kushtia	... ...	11	4	

Murshidabad.—Rainfall at Sadar 1·72, Kandi 1·11, Jangipur 0·25, Lalbagh report not received. Weather seasonable. Harvesting of *til* over. Prospects of mulberry and sugarcane fair. Jute thriving well. *Haimanti* seedlings doing well. Rain wanted for *aus* paddy. Small-pox reported among cattle in Bahutal outpost. Fodder and water sufficient. Common rice sells as follows:—

		Srs.	ch.	
Sadar	... ...	10	12	per rupee.
Kandi	... ...	12	8	
Jangipur	... ...	12	8	

Jessore.—Report not received.

Khulna.—Rainfall at Sadar 3·42. Weather hot and cloudy. Good rainfall on 30th June. Cultivation and sowing of *aman* going on. State of crops continues favourable. Fodder and water sufficient. Cattle-disease reported from thana Paikgachha. Common rice sells as follows:—

	Srs. ch.	
Sadar	11 8	per rupee.
Bagerhat	12 0	
Satkhira	10 8	

Rajshahi.—Rainfall at Sadar 2·15, Nator 0·27, Naugaon 0·61. Weather hot. Sowing of winter crop going on. Prospects of crop good. Sporadic cases of cattle-disease reported from Naugaon. Common rice sells at 12 seers per rupee.

Dinajpur.—Rainfall at Sadar 0·67. Fall in the district general except at Churamon. Minimum fall 3·58. Weather seasonable. Standing crops good. Transplantation of winter rice has commenced. No cattle-disease. Fodder and drinking-water plentiful. Rice selling at 12 seers per rupee.

Jalpaiguri.—Rainfall at Sadar 5·99, Alipur Duars 9·45. Weather hot and cloudy with occasional showers. *Bhadoi* paddy and jute growing well. Transplantation of *haimanti* paddy commenced in places. Cattle-disease prevails in Alipur Duars subdivision. Fodder and water sufficient. Common rice sells at 11 seers and 11 chitaks per rupee.

Darjeeling.—Rainfall at Sadar 2·88, Kurseong 0·61, Siliguri 5·56. Weather seasonable. *Hill*—Potato being harvested. *Haimanti dhan* being sown. Maize, *phaphar*, and *chota marua* doing well. *Terai*—Ploughing for *haimanti* paddy continues. Sowing of seedlings nearly finished. Prospects good. Coarse rice sells as follows:—

	Srs. ch.	
Hill	8 0	per rupee.
Terai	12 0	

Maize sells at Darjeeling at 16 and at Kalimpong at 17 seers per rupee.

Rangpur.—Rainfall at Sadar 1·68. Fall general. Transplantation of *aman* going on. Weather cloudy and hot at times. Prospect of standing crops on the whole good. Prospect of *aman* not favourable in Gaibanda. Fodder and water sufficient. Common rice sells at Sadar at 11 seers per rupee.

Bogra.—Rainfall at Sadar 0·32. Fall general except in the west. Weather hot and cloudy. Weeding of *aus* and jute going on. Lands are being prepared for winter rice. Prospects good. Fodder and water sufficient. Common rice sells at 11 seers 4 chitaks per rupee.

Pabna.—Rainfall at Sadar 4·01, Sirajganj 1·25. Fall general. Weather partially cloudy and rainy. Weeding of paddy and jute going on. Harvesting of *aus* commenced. Prospects of standing crops fair. Fodder and water sufficient. No cattle-disease. Common rice sells at 10½ seers per rupee.

Dacca.—Rainfall at Sadar 1·66, Manikganj 1·06, Munshiganj 1·95, Narayanganj 1·12 Prospects of crops fair. Whether rainy. Fodder available. No cattle-disease. Common rice sells at 10¾ seers per rupee.

Mymensingh.—Rainfall at Sadar 3·74. Fall general. Weather cloudy and hot. *Bhadoi* and jute crops have suffered owing to excessive rain. Fodder and water sufficient. No cattle-disease. Common rice sells as follows:—

	Srs. ch.	
Sadar	9 8	per rupee.
Kishorganj	11 11	
Jamalpur	10 10	
Netrokona	11 12	
Tangail	10 0	

Faridpur.—Rainfall at Sadar 8·67, Goalundo 2·30, Madaripur 0·88. Weather hot and steamy. Heavy showers at intervals make prospects of crops gloomy. Water rising rapidly. Fodder sufficient. No cattle-disease. Common rice sells at 12 seers in Goalundo and at 11 seers in Faridpur and Madaripur subdivisions.

Backergunge.—Rainfall at Sadar ·70. Fall general, but heaviest in Bhola 5·62. Weather oppressive. *Aus* sowing estimated at 30 per cent. of usual area. Prospects fair. Fodder sufficient. Cattle-disease reported from Bhola thana. Common rice sells at Sadar at 10 seers per rupee.

Tippera.—Rainfall at Sadar 3·26, Brahmanbaria 1·81, Chandpur 1·62. Weather seasonable. Prospects not good in Sadar, but improving in Chandpur. Preparation of lands for *aman* paddy continues. Fodder and water sufficient. No cattle-disease. Common rice sells at 11 seers per rupee.

Noakhali.—Rainfall at Sadar 9·09, Feni 0·81. Weather seasonable. Lands being prepared for transplantation of *aman*. Prospects fair. Fodder and water sufficient. Cattle-disease in four thanas. Common rice sells at Sadar at 10 seers and at Feni at 13 seers per rupee.

Chittagong.—Rainfall at Sadar 4·86, Cox's Bazar 1·23. *Aus dhan* is being transplanted. Ploughing for *aman* crops going on. Cattle-disease prevalent in parts of the district. Water and fodder sufficient. Common rice selling at 12 seers per rupee.

Chittagong Hill Tracts.—Rainfall at Sadar 2·85. Fall general. Weather alternately fine and wet. *Joom* paddy progressing. No cattle-disease. Rice selling at 11 seers per rupee.

Patna.—Rainfall nil. Weather clear and excessive hot. Rain urgently wanted. *China* and Indian-corn already sown suffer for want of rain. Sugarcane doing well. No cattle-disease. Fodder and water sufficient. Common rice sells as follows:—

	Srs.	ch.	
Patna	11	0	per rupee.
Barh	11	8	
Dinapore	11	0	

Gaya.—Rainfall nil. Weather hot and cloudy. Sugarcane doing well. Rain badly wanted for *bhadoi* paddy and sugarcane. No cattle-disease. Fodder and water sufficient. Average price of common rice is 10 seers 14 chitaks per rupee.

Shahabad.—Rainfall at Dehri ·01. Weather very hot with west wind. Rain urgently wanted. Ploughing retarded for want of rain. Sugarcane good. Fodder and water sufficient. Rice sells at Sadar at 11 seers a rupee.

Saran.—Rainfall nil. Weather very hot with high east and west winds. Seedlings and other standing crops are withering for want of rain. Agricultural operations retarded. Rain is urgently wanted. No cattle-disease. Common rice sells at 11 seers per rupee. Fodder and water sufficient.

Champaran.—Rainfall at Sadar nil, Bettiah nil. Weather very hot. Rain wanted for sowing and plantation of *bhadoi* paddy. Standing crops still doing well, but rain urgently wanted. No cattle-disease. Fodder and water sufficient. Common rice sells at 12½ seers and maize at 23½ seers per rupee.

Muzaffarpur.—Rainfall nil. Weather hot and cloudy at times. Sowing of paddy and *bhadoi* crops continues in Sitamarhi subdivision, but elsewhere retarded for want of rain which is urgently wanted all over the district. Fodder and water sufficient. A few cases of cattle-disease in Sitamarhi subdivision. Prices are—Common rice 11½ seers and maize 19 seers a rupee.

Darbhanga.—No rain. Weather very hot. Agricultural operations going on. Rain wanted in thana Madhubani. Fodder and water sufficient. Cattle-disease is reported from Darbhanga and Phulparas police-stations. Common rice sells as follows:—

	Srs.	ch.	
Sadar	11	4	per rupee.
Samastipur	12	0	
Madhubani	12	0	

Monghyr.—Rainfall nil. Weather extremely hot and close. *Bhadoi* sowing going on. Rain urgently needed for *bhadoi* crops and paddy sowing. Sugarcane and standing crops doing well. A few cases of cattle-disease reported from Begusarai thana. Ample fodder and water. Common rice sells at Sadar at 11 seers 3 chitaks and at subdivisions at 11 seers per rupee.

Bhagalpur.—Rainfall nil. Weather cloudy and windy. Transplantation of *aghani* and *bhadoi* going on. Prospects fair except in Banka subdivision, where crops are being destroyed on account of drought, but sugarcane is doing well. No cattle-disease reported except from Supaul. Fodder and water sufficient. Common rice sells as follows:—

	Srs.	ch.	
Sadar	12	0	per rupee.
Banka	12	8	
Madhipura	13	0	
Supaul	13	8	

Purnea.—Rainfall at Sadar 0·80, Kishanganj 2·30, Araria nil. Fall very scanty in the Sadar and heavy rain badly wanted for the standing crops. Weather variable. Fodder and water sufficient. No cattle-disease. Common rice sells at Sadar and Kishanganj at 11 seers and at Araria at 13 seers per rupee.

Malda.—Rainfall at Sibganj ·95. Weather hot and cloudy. Rain needed for the growth of *bhadoi* and jute plants. Sowing of winter rice continues. No cattle-disease. Fodder and water available. Common rice sells at 11 seers per rupee.

Santhal Parganas.—Rainfall at Sadar 0·64, Deoghur 1·27, Jamtara 0·25, Pakaur 0·75, Rajmahal 0·06. Week begun with extreme heat, but latterly it was somewhat cool. More rain wanted for paddy seedlings and Indian-corn. Sugarcane thriving. Fodder sufficient. Price of common rice at Sadar 12 seers per rupee.

Cuttack.—Rainfall at Sadar 2·01. Fall general, but very scanty in parts. Weather hot. Sowing of *beali* and of *sarad* nearly completed on usual area; both germinating well. Prospects fair. No cattle-disease. Fodder and water sufficient. Common rice sells at 12 seers 7 chitaks at Sadar.

Balasore.—Rainfall at Sadar nil. Fall partial. Paddy plants growing well. Sugarcane and *rabi* crops doing well. Rice sells at 13 and 14 seers per rupee at Sadar and Bhadrak respectively. Fodder and water sufficient. No cattle disease reported.

Angul.—Rainfall at Sadar ·60, Chhendipada ·63, Bissipara ·39. Weather close and cloudy. More rain urgently wanted. Seeds cannot germinate for want of sufficient moisture. Ploughing in full swing. Sowing completed in some parts and continuing in others. Prospects of sugarcane fair. Fodder obtainable. Water still scarce in some places. Cattle-disease continues. Common rice sells at 12 and 15 seers per rupee at Sadar and interior respectively.

Puri.—Rainfall at Sadar 0·62. Weather seasonable. Sowing of winter rice and *bhadoi* paddy in progress. Sugarcane and cotton crops doing well. Harvesting of summer rice still continuing in some places. Common rice sells at 13 seers 2 chitaks per rupee. Cattle-disease prevailing at places.

Hazaribagh.—Rainfall at Sadar nil, Giridih 2·31. Fall not general. Weather hot and sultry. Ploughing of land and sowing of paddy and *bhadoi* in progress. Fodder sufficient. Water scarce. Common rice sells at 11½ seers per rupee.

Ranchi.—Rainfall 0·33. Weather hot and windy. Rain badly wanted. Agricultural operations retarded. Cattle-disease reported from Silli and Toto thanas. Common rice selling at 13½ seers per rupee. Scarcity of drinking water beginning to be felt.

Palamau.—Rainfall at Sadar 0·26. Weather hot and occasionally cloudy. Rain urgently wanted for sugarcane and *bhadoi* sowings which are being retarded. Fodder and water growing scarce in places. Cattle-disease in three thanas. Prices at Sadar—Rice 10 seers 2 chitaks and maize 13½ seers per rupee.

Manbhum.—Rainfall at Sadar 0·20, Gobindpur 0·49. Weather very hot, occasionally cloudy. Paddy seedlings now doing fairly well. More rain wanted at once for *bhadoi* sowings and for transplantation of paddy. Fodder and water sufficient. Cattle-disease not reported. Price of common rice at Sadar 12 and at Gobindpur 11 seers per rupee. Supply sufficient.

Singhbhum.—Rainfall at Sadar 0·69. Paddy seedlings need rain very much. Average price of rice 13½ seers in the district; at Chaibassa 13 seers per rupee.

General Summary.—Rainfall continued to be heavy in East and North Bengal, but it was generally light and scattered in other parts of the Province. Rain is much needed in Bihar, and Chota Nagpur, in several parts of the Burdwan and Presidency Divisions, and also in Angul, for carrying on agricultural operations, as well as for the benefit of standing crops. Cattle-disease reported from 15 districts. Fodder sufficient except at places in Palamau. Water scarce in Angul, Hazaribagh, Ranchi and in parts of Palamau. The price of common rice has risen in 10 districts, fallen in 10 and is stationary in the rest.

By order of the Lieutenant-Governor of Bengal,

W. C. MACPHERSON,

Offg. Secretary to the Govt. of Bengal.

REVENUE DEPARTMENT,
The 1st July 1902.

No I

Imports of Principal Articles into Calcutta by Rail, Road, River,

Whence imported	Food-grains								Fibrous products		Oilseeds	
	Rice and paddy			Wheat	Wheat flour	Gram and pulse	Other food-grains	Total	Jute, raw	Gunny-bags	Linseed	Mustard seed
	Rice	Paddy*	Total (in rice)									
Bengal	Mds	Mds	Mds	Mds	Mds	Mds	Mds	Mds	Mds	No	Mds	Mds
Burdwan	28,605	30,779	47,842	1,130	.....	2,583	8	51,563	..	31,110	4,306	335
Birbhum	38,718	686	39,147	.....	.....	745	.....	39,892		1,755	.....	.....
Midnapore	190,993	4,570	194,037	.....	.....	1,462	.	195,499	846	8,930	3,650	448
Hooghly	63,088	12,176	70,698	532	8	6,287	79	77,604	19,212	626,080	2,845	1,020
24-Parganas	326,016	21,583	339,505	.	23	2,910	...	342,438	25,400	1,260,501	1,900	100
Nadia	4,190	873	4,735	20,372	.....	214,390	3,129	242,626	4,955	15,260	121,276	603
Murshidabad	65		65	4,407	.....	15,186	368	20,026	2 415	... .	5,830	365
Jessore	2,525	2,000	3,775	150	.....	5,077	.....	9,002	20,561	1,085	1,509	2,422
Khulna	1,369	875	1,916	.....	.....	200	.....	2,116	329	140	.....	.
Rajshahi	2	.....	2	747	.....	5,165	.....	5,914	19,115	70	10,569	1,407
Dinajpur	3,201	. ...	3,201	.....	... ..	14	.....	3,215	3,177	62,685	... .	1,189
Jalpaiguri	...	.....	.....	.....	.....	.....	.....		42,972	10,815	.....	431
Darjeeling	2	.. ..	2	.....	.....	.....	.....	2	5,047	9,555	.....	.....
Rangpur	...	.....	.....	242	.....	.....	.....	242	150,125	3,605	1,2*5	6,880
Bogra	1,131	...	1,131	.....	.....	216	240	1,587	18,781	1,155	1,428	7,639
Pabna	3	3	5	194	.....	5,147	.....	5,346	252,840	9,030	8,962	9,401
Cooch Behar	.....	.....	.....	.....	.....	... ..	.....	.....	11,413	35	.....	.....
Dacca	6		6	.		24	.....	30	450,956	2,895	3,302	4,916
Mymensingh	.		.....	.		137	.....	137	161,366	700	2,310	14,649
Faridpur	1,381	150	1,475	3,256	172	14,699	.	18,302	78,401	2,845	28,599	12,555
Backergunge	131,387	500	131,699	.....		..	....	131,699	1,891	3,255	51	.....
Tippera	61	.. .	61	.....	. ...	. .	. . .	61	17,287	310	4,741	1
Noakhali	...		...	.....	...		.....		67		3,124	... ..
Chittagong	4		4	.....	. .	.... .	.. .	4		840	.....	.....
Total Bengal	792,747	74,495	839,306	30,030	203	272,242	3,824	1,145,605	1,316,156	2,122,086	205,725	60,341
Bihar												
Patna	7	. ..	7	.	... ..	25,555	21	25,583		910	82,085	16,080
Gaya	30	.. ...	30	.....	.....	337	.....	376	.....	910	76,241	1,019
Shahabad	.	.....			... ..	7,977	.....	7,977		315	54,778	672
Saran	.. ...	.....	.....	.	.....	2,435	... ..	2,435		..	.....	3,037
Champaran	...	.....	.	.....	.....	.....	..	.		1,785	25,063	5,856
Muzaffarpur	...	.....			.....	5,333	6	5,339	.....	840	21,333	13,641
Darbhanga	4	.....	4		.....	1,704		1,708	.	525	26,723	28,004
Monghyr	...	.....		733	... ..	37,942		38,675	.	35	53,769	50,032
Bhagalpur	28		28	2,923	.....	3,570	733	7,254	973	175	25,169	59,026
Purnea	...		...	.	.....	.		..	16,797	3,745	1,252	38,505
Malda	1		1	928	.....	5,337	..	6,266	463	665	1,704	125
Sonthal Parganas	29	.....	20	37,008		15,577	367	52,972	268	140	8,865	46,933
Total Bihar	99		99	41,592		103,757	1,127	146,575	18,409	10,045	376,982	263,479
Orissa												
Cuttack	2,507		2,507	.....	.....	16,443	.	18,950	75	....	30	197
Balasore	65,549	3,303	67,613		.....	5,673		71,286	7,049	700	909	.....
Puri	1,142	.....	1,142	.....	.. ...	387	.. ...	1,529	.....		.....	.....
Total Orissa	69,198	3,303	71,262	.	.....	20,503		91,765	7,124	700	939	197
Chota Nagpur												
Hazaribagh	...	.....	...	.....	.	...	...		.....	.....	.....	.....
Manbhum	28		28	.....	. .	.		28		280	.....	.....
Singhbhum	604		604	.....	.....			604	.	35	900	... ..
Total Chota Nagpur	632		632	.... .	.	.....	.....	632		315	900	.....
Total from the Provinces under the Lieutenant-Governor of Bengal	862,676	77,798	911,299	71,622	203	396,502	4,951	1,384,577	1,341,770	2,133,146	584,546	324,007
Other Provinces and places												
Burma	167,770	104,517	233,093	.....	.....	3,872	.....	236,965	... .	...	.	.. ...
Assam	5,782	.....	5,782	. ...	...	12	.....	5,794	7,287	560	19,101	36,980
U. P. of Agra and Oudh.	8	.....	8	160,173	870	187,397	676	349,124	.... .	3,465	340,401	249,800
Panjab	37	.....	37	3,155	.	1,363	.....	4,555	.....	... .	. ..	11,307
Central Provinces	3,151	.. ...	3,151	677		200		4,028		.	1,686	2,853
Rajputana and Central India.	.....	.. ...	.. ...	.....	.....	337		337	26		723	960
Bombay	.. ..	.....	.....	.....	.....	7,801	.. ..	7,801	.....	.....	.....	.....
Madras	673	.. ...	673	... ..	.....	16,451	.....	17,124	.....	.....	.....	.....
Total 1902	1,040,097	182,315	1,154,043	235,627	1,073	613,935	5,627	2,010,305	1,349,093	2,137,171	946,457	625,907
Total 1901	880,183	314,840	1,076,956	243,165	5,107	433,822	34,869	1,793,921	656,220	1,253,339	614,040	595,956
Total 1900	1,318,281	207,010	1,447,603	151,076	388	534,787	39,060	2,142,978	309,897	2,476,720	997,200	367,246

* One maund of paddy is equivalent to 25 seers of rice

Canal, and Sea (coastwise) in April 1902

Tea, Indian	Cotton, raw	Silk, raw	Coal and coke	Indigo	Sugar		Tobacco		Whence imported
					Refined	Unrefined	Unmanufactured	Manufactured	
Mds	Mds	Mds	Mds	Mds	Mds	Mds	Mds	Mds	BENGAL
.....	12	.....	3,211,720	.....	.....	16	.....	.....	
.....	.....	69	.....	.....	.....	.....	74	.....	Burdwan
.....	7	141	10,108	.....	.....	1,551	24	.....	Birbhum
.....	.....	.....	2,702	.....	334	10,519	4,325	917	Midnapore
1	3,749	.....	5,560	.....	1,052	26,276	2,417	658	Hooghly
.....	80	.....	250	.....	2	1,163	2,292	.....	24-Parganas
.....	.....	850	.....	.....	.....	.....	.....	.....	Nadia
.....	330	.....	.....	.....	.....	9,298	1,128	.....	Murshidabad
.....	.....	.....	.....	.....	.....	18,735	.....	.....	Jessore
.....	.....	244	.....	.....	.....	.....	.....	.....	Khulna
.....	.....	.....	.....	.....	.....	1	.....	.....	Rajshahi
1,476	.....	.....	.....	.....	.....	.....	3,098	.....	Dinajpur
864	.....	.....	.....	.....	.....	.....	.....	1	Jalpaiguri
.....	12,528	.....	.....	.....	.....	.....	12,083	.....	Darjeeling
.....	.....	.....	.....	.....	.....	.....	.....	.....	Rangpur
.....	101	.....	.....	.....	.....	.....	.....	.....	Bogra
.....	.....	.....	.....	.....	.....	.....	223	.....	Pabna
.....	3,250	.....	.....	.....	.....	.....	.....	.....	Cooch Behar
.....	40	.....	.....	.....	.....	.....	.....	.....	Dacca
.....	80	.....	.....	.....	.....	.....	.....	.....	Mymensingh
.....	.....	.....	.....	.....	.....	.....	.....	.....	Faridpur
.....	.....	.....	.....	.....	.....	.....	.....	.....	Backergunge
.....	.....	.....	.....	.....	.....	.....	.....	.....	Tippera
.....	.....	.....	.....	.....	.....	.....	.....	.....	Noakhali
36	2,854	.....	.....	.....	.....	.....	.....	.....	Chittagong
2,377	23,046	1,304	3,230,349	.....	1,388	68,549	25,664	1,576	Total Bengal
									BIHAR
.....	85	.....	.....	.....	.....	2,383	673	1,107	Patna
.....	.....	.....	.....	.....	.....	557	.....	875	Gaya
.....	.....	.....	.....	.....	.....	2,648	216	.....	Shahabad
.....	.....	.....	.....	.....	.....	574	16	.....	Saran
.....	.....	.....	.....	368	.....	.....	.....	.....	Champaran
.....	.....	.....	.....	.....	.....	8	747	.....	Muzaffarpur
.....	.....	.....	.....	.....	.....	.....	267	.....	Darbhanga
.....	.....	.....	.....	.....	.....	.....	5	2	Monghyr
.....	.....	.....	.....	2	.....	.....	.....	.....	Bhagalpur
.....	.....	.....	.....	3	.....	.....	7,958	.....	Purnea
.....	.....	.....	.....	.....	.....	.....	.....	.....	Malda
.....	10	.....	232	.....	.....	.....	.....	108	Santhal Parganas
.....	98	.....	232	373	.....	6,170	9,882	1,792	Total Bihar
									ORISSA
.....	.....	.....	.....	.....	.....	.....	.....	.....	Cuttack
.....	48	.....	.....	.....	.....	.....	.....	.....	Balasore
.....	.....	.....	.....	.....	.....	.....	.....	.....	Puri
.....	48	.....	.....	.....	.....	.....	.....	.....	Total Orissa
									CHOTA NAGPUR
.....	.....	.....	155,000	.....	.....	.....	.....	.....	Hazaribagh
8	.....	.....	1,243,849	86	.....	.....	.....	.....	Manbhum
.....	.....	.....	.....	.....	.....	.....	4	.....	Singhbhum
.....	.....	.....	1,398,849	86	.....	.....	4	.....	Total Chota Nagpur
2,377	23,189	1,304	4,629,430	459	1,388	68,719	35,550	3,368	Total from the Provinces under the Lieutenant-Governor of Bengal
									OTHER PROVINCES AND PLACES
.....	551	.....	.....	.....	.....	.....	.....	51	Burma
3,390	8,326	83	9,364	.....	.....	.....	.....	.....	Assam
13	64,975	.....	.....	13	.....	616	.....	.....	United Provinces of Agra and Oudh
141	6,302	.....	.....	.....	.....	.....	18	.....	Panjab
.....	2,819	.....	4	.....	.....	.....	.....	.....	Central Provinces
.....	3,331	.....	.....	.....	.....	.....	.....	.....	Rajputana and Central India
.....	492	3	.....	.....	110	.....	9	42	Bombay
.....	.....	.....	.....	.....	1,133	.....	67	149	Madras
5,830	109,875	1,390	4,638,798	472	2,631	69,335	35,644	3,610	1902 } Total
2,056	55,730	772	4,788,040	156	11,349	70,804	64,901	2,603	1901 }
3,875	25,976	1,194	5,716,897	337	2,399	63,279	45,602	3,507	1900 }

No II

Statement of the Routes by which the Articles enumerated in table No I were imported into Calcutta in April 1902

Routes	Food-grains						Fibrous products		Oilseeds	
	Rice	Paddy	Wheat	Wheat flour	Gram and pulse	Other food-grains	Jute, raw	Gunny-bags	Linseed	Mustard seed
	Mds	Mds	Mds	Mds	Mds	Mds	Mds	No	Mds	Mds
By boats	420,594	26,345	13,283	.....	63,151	852	164,424	1,669,311	32,488	7,956
,, river steamers ...	8,960	843	825	8	3,466	374	616,295	17,290	26,466	53,084
,, rail { E. I. Railway	65,828	30,234	209,076	870	307,513	2,179	82,138	54,705	723,370	519,183
,, rail { E. B. S. Railway	95,114	3	12,443	172	185,710	2,923	432,512	338,030	147,446	41,051
,, rail { Assam-Bengal Railway	61	.....	.....	.....	.....	.....	.....	1,085	4,612	586
,, rail { Bengal-Nagpur Railway	69,641	2,668	.....	.....	34,301	.....	101	4,060	4,617	4,000
,, rail { Bengal Central Railway	942	.....	.....	.....	988	.....	18,650	1,190	4,560	47
,, road	182,500	16,457	.....	23	3,902	.....	27,923	50,800	2,680	.....
,, sea	196,451	105,764	.....	.....	14,934	.....	7,049	700	12	.....
Total ... 1902 ...	1,040,097	182,315	235,627	1,073	613,935	5,027	1,349,092	2,137,171	946,457	625,907
Total ... 1901 ...	880,183	314,840	243,165	5,107	433,822	34,869	656,820	1,253,339	614,049	595,956
Total ... 1900 ...	1,318,281	207,010	151,076	388	504,787	39,060	309,897	2,476,729	997,200	367,248

Routes	Tea, Indian	Cotton, raw	Silk, raw	Coal and Coke	Indigo	Sugar		Tobacco	
						Refined	Unrefined	Unmanufactured	Manufactured
	Mds	Mds	Mds	Mds	Mds	Mds	Mds	Mds	Mds
By boats	.....	2,466	73	4,409	.....	1,388	24,235	5,082	1,390
,, river steamers ...	1,830	22,774	68	9,364	.....	.....	8	355	488
,, rail { E. I. Railway	154	74,605	919	4,610,810	472	.....	7,136	2,788	789
,, rail { E. B. S. Railway	3,390	1,477	265	.....	.....	.....	1,626	22,260	1
,, rail { Assam-Bengal Railway	920	.....	63	.....	.....	.....	.....	.....	.....
,, rail { Bengal-Nagpur Railway	.....	2,867	.....	5,905	.....	2	.....	4	.....
,, rail { Bengal Central Railway	.....	330	.....	.....	.....	.....	9,339	30	.....
,, road	.....	1,450	.....	7,220	.....	.....	27,001	5,063	800
,, sea	36	3,507	3	.....	.....	1,241	.....	67	342
Total ... 1902 ...	5,330	109,875	1,390	4,636,736	472	2,631	69,335	35,644	3,610
Total ... 1901 ...	2,956	55,730	772	4,788,949	156	11,349	70,804	64,901	2,603
Total ... 1900 ...	3,873	25,976	1,194	5,716,897	337	2,399	63,279	45,602	2,597

No. III

Imports of certain Articles into Calcutta by Sea (Foreign and Coastwise) in April 1902

	Cotton piece-goods		Cotton yarn		Salt	Kerosene oil
	European	Indian	European	Indian		
	Rs	Rs	Mds	Mds	Mds	Mds
From Foreign Countries—						
United Kingdom	1,50,54,233	.....	11,706	.....	491,388	.....
Other countries	28,464	.....	887	.....	332,894	336,815
Total ...	1,50,82,697	.....	12,593	.....	824,282	336,815
Coastwise—						
Bombay	17,967	2,00,293	.....	13,124	107,507	.....
Sind	6,375	.....	.....	.....	.....	.....
Madras	13,404	38,590	.....	.....	.....	.....
Burma	29,521	.....	.....	.....	.....	106,012
Karikal	34	.....	.....	.....	.....	.....
Total ...	67,301	2,47,883	.....	13,124	107,507	106,012
Total ... 1902 ...	1,51,49,998	2,47,883	12,593	13,124	931,789	442,82
Total ... 1901 ...	1,24,51,027	2,59,458	14,046	17,020	900,588	375,742
Total ... 1900 ...	1,12,65,047	1,29,009	14,288	5,435	456,379	194,305

No. IV

Exports of Principal Articles from Calcutta by Sea (coastwise and to foreign countries) in April 1902

	Rice	Paddy	Total (in rice)	Wheat	Wheat flour	Gram and pulse	Other food-grains	Total	Jute, raw	Gunny-bags
Coastwise—	Mds	Mds	Mds	Mds	Mds	Mds	Mds	Mds	Mds	No.
Bombay	27,637	.....	27,637	.....	.....	1,960	.....	29,597	.....	829,000
Sind	.....	.....	.....	.....	.....	.....	.....	.....	.....	134,750
Madras	.....	.....	.....	1,733	369	35,250	4,222	41,574	.....	161,200
Other ports in Madras ...	26,369	.....	26,369	41	752	3,087	.....	30,249	.....	204,100
Burma	2,700	.....	2,700	1,351	11,311	18,804	1,113	35,279	25	2,913,500
Pondichery ...	.....	.....	.....	.....	150	419	.....	569	..... @	17,000
Allepey ...	680	.....	680	.....	.....	.....	.....	680	28	.....
Other Indian ports	4	.....	4	237	841	2,137	10	3,229	.....	55,500
Total ...	57,390	.....	57,390	3,362	13,423	61,657	5,345	141,177	53	4,315,050
To Foreign countries—										
United Kingdom	84,015	.....	84,015	12,427	.....	160,885	.....	257,327	355,279	2,395,050
Other countries	593,878	5	593,881	4,066	12,298	44,140	9,804	664,189	929,245	24,807,150
Total ...	677,893	5	677,896	16,493	12,298	205,025	9,804	921,516	1,284,524	27,202,200
Total ... 1902 ...	735,283	5	735,286	19,855	25,721	266,682	15,149	1,062,693	1,284,577	31,517,250
Total ... 1901 ...	941,808	5	941,806	5,479	23,303	118,856	8,363	1,097,896	948,377	7,660,658
Total ... 1900 ...	1,425,232	68,083	1,467,783	54,823	14,134	213,136	5,112	1,754,988	625,416	25,182,842

	Linseed	Mustard seed	Tea, Indian	Cotton, raw	Silk, raw	Coal and coke	Indigo	Sugar: Refined	Sugar: Unrefined	Tobacco: Unmanufactured	Tobacco: Manufactured
Coastwise—	Mds	Mds	Mds	Mds	Mds	Mds	Mds	Mds	Mds	Mds	Mds
Bombay	.....	2,517	885	.....	.....	1,718,811	.....	.....	.....	.....	13
Sind	.....	.....	5	.....	.....	430,873	.....	.....	.....	.....	.....
Madras	.....	.....	65	.....	10	257,296	.....	61	.....	.....	.....
Other ports in Madras ...	.....	2,168	.....	.....	.....	309,217	.....	1	.....	.....	65
Burma	.....	.....	238	128	12	790,424	3	1,160	711	5,241	273
Other Indian ports	.....	.....	.....	.....	.....	87,519	.....	2,315	757	697	65
Total ...	.....	4,685	1,193	128	22	3,574,140	3	3,537	1,468	5,938	416
To Foreign countries—											
United Kingdom	494,809	22,447	8,792	1,239	534	.....	1,998	.....	.....	.....	78
Other countries	400,122	59,640	2,508	55,986	1,273	1,348,017	1,259	750	.....	4,229	155
Total ...	894,931	82,087	11,300	57,225	1,807	1,348,017	3,257	750	.....	4,229	233
Total ... 1902 ...	894,931	86,772	12,493	57,353	1,829	4,922,157	3,260	4,287	1,468	10,167	649
Total ... 1901 ...	543,387	4,458	15,041	37,330	1,708	4,843,189	1,955	3,370	693	11,845	831
Total ... 1900 ...	862,660	101,968	5,105	28,054	1,351	2,820,685	1,774	2,741	1,706	5,067	719

No. V

Exports of certain Articles from Calcutta by Rail, Road, River, Canal, and Sea (coastwise) in April 1902

Whither exported	Cotton piece-goods		Cotton yarn		Salt	Kerosene oil		Gunny-bags
	European	Indian	European	Indian		From Calcutta	From Budge-Budge*	
Bengal	Rs	Rs	Mds	Mds	Mds	Mds	Mds	No.
Burdwan	2,03,351	....	180	829	28,199	169	16,850	56,482
Birbhum	1,96,305	.....	54	1,074	20,448	.....	5,712	34,650
Midnapore	2,54,916	5,008	1,109	631	16,364	115	1,287	20,295
Hooghly	1,11,949	3,292	302	60	6,830	4,392	4,395	8,295
24-Parganas	2,85,263	7,919	781	.....	14,313	6,621	3,482	40,293
Calcutta	. ...	.. .	..	..	.....	..	69,265	...
Nadia	3 54 525	... ..	1,673	118	22,217	1,200	7,701	198,915
Murshidabad	59,542	219	5	148	10,408	26	5,996	57,925
Jessore	39,334		415		17,590	3,886	1,012	9,585
Khulna	18,656		44	.....	2,758	220	..	140
Rajshahi	1,65,409	..	76	26	17,041	14	2,377	41,895
Dinajpur	1,40,602	100	15	278	19,126	246	3,709	19,915
Jalpaiguri	67,665	183	50	340	12,379	262	4,654	7,250
Darjeeling	96,574	438	... .	260	5,415	75	2,686	6,195
Rangpur	2,74,521	.	254	189	30,350	51	6,427	23,890
Bogra	1,48,151	.	133	57	16,137	1	2,827	13,125
Pabna	1,15,391	..	300	93	24,394	79	3,806	46,770
Cooch Behar	41,633	839	13	81	3,881	.	152	560
Dacca	2,54,730	... ..	1,524	72	31,307	520	9,960	17,570
Mymensingh	1,85,982		67	196	6,550	... .	4,106	17,465
Faridpur	1,24,500	75	1,465	65	16,559	3,643	1,595	39,060
Backergunge	1,88,584	.....	1,573	.....	23,487	1,373		17,295
Tippera	99,302	.. ...	593	38	5,832	7	37	20,510
Noakhali	61,951	.....	237	.....	1,233	1	.....	1,605
Chittagong	1,09,143	.....	454	.. ...	2		65	12,600
Total Bengal	35,18,068	18,170	11,783	4,555	356,820	22,907	158,081	711,085
Bihar								
Patna	4,48,256	154	103	480	12,311	30	22,841	147,035
Gaya	3,00,101	10,537	.....	420	29,171	.	6,923	47,250
Shahabad	4,90,035	2,592		278	16,241	54	3,925	60,375
Saran	2,85,068	.....	67	70	20,988	37	2,798	9,870
Champaran	2,26,444	... ..	19	604	22,908	28	4,984	31,000
Muzaffarpur	2,53,356	.. ..		634	23,569	24	6,939	31,640
Darbhanga	2,90,081		.....	584	33,689	40	8,909	57,400
Monghyr	3,40,541	182	7	866	21,217	48	7,771	39,330
Bhagalpur	2,66,277	.....	74	53	23,869	14	9,855	106,750
Purnea	26,276	.....	.. .	93	18,166	50	4,003	9,660
Malda	16 624		118	53	2,005	.	855	6,755
Santhal Parganas	1,23,874	...	224	487	24,402	3	10,539	105,595
Total Bihar	29,76,733	13,467	612	4,623	246,966	397	90,600	702,660
Orissa								
Cuttack	25,690	331	... .	1,106		987	2,608	6,825
Balasore	41,419	1,652	571	3,341	11,303	450	83	60,890
Puri	16,073	... ..	.....	1,179	.....	356	...	....
Total Orissa	83,192	2,033	571	5,626	11,303	1,793	2,691	67,715
Chota Nagpur								
Hazaribagh	86 288		94	243	9,233	14	1,917	385
Manbhum	82,088			636	25,573	58	3,720	4,165
Singhbhum	6,728	1,241		84	5,080	86	198	9,319
Total Chota Nagpur	1,75,104	1,241	84	963	39,884	158	5,835	13,869
Total Exports to the Provinces under the Lieutenant-Governor of Bengal	67,53,017	34,911	13,050	15,766	654,973	25,255	257,207	1,495,320
Other Provinces and Places								
Burma	76 202	3,572	837	2,261	... ..	69	... ..	2,913,500
Assam	5, 7,506	511	192	1,419	31,418	795	6,315	56,068
U P of Agra and Oudh	54,99,153	35,229	1,530	180	25,749	115	52,338	1,367,910
Panjab	11,01,096	12,116	504	78		20	3,610	297,640
Central Provinces	55,642	2,834	6	103		4,166	9,132	266,430
Rajputana and Central India	88,650	208	36	5	.....	18	1,882	10,155
Berar	3,937	208	.....	.....	.....	.....	... ..	1,260
Nizam's Territory	3,580	1,040	.....	.....	.....	.....	.....	2,730
Bombay	16,119	416	.....	.....	.....	.....	.....	838,310
Madras	60,441	463	12	153	. ...	3,463	871	368,870
Pondichery	....	.....	.....	.....	.....	.....	.....	17,000
Sind	. ....	. ...	.....		. ..	.....	.....	134,780
Total 1902	1,41,76,113	91,508	15,757	20,045	712,131	33,901	331,353	7,669,895
Total 1901	1,07,08,848	87,804	14,130	25,040	640,980	23,997	248,759	8,122,945
Total 1900	1,15,05,658	1,56,355	13,470	15,554	562,878	26,513	247,522	7,788,601

* Represents the trade registered at the traffic registering stations only

No VI

Statement of the Routes by which the Articles enumerated in table No. V were exported from Calcutta in April 1902

		COTTON PIECE-GOODS		COTTON YARN		Salt	KEROSENE OIL		Gunny-bags
		European	Indian	European	Indian		From Calcutta	From Budge-Budge	
		Rs	Rs	Mds	Mds	Mds	Mds	Mds	No
By boats		1,44,200	1,800	644		64,685	11,086	11,733	25,557
,, river steamers		13,02,991	547	5,112	898	95,300	616	24,767	82,425
,, rail	East Indian Railway	96,74,657	54,641	2,720	7,640	331,344	685	192,738	2,234,645
	Eastern Bengal State Railway	10,35,334	2,555	4,290	3,119	166,041	2,019	93,652	484,785
	Assam-Bengal Railway	1,60,523	.....	727	220	4,900	215	102	5,075
	Bengal-Nagpur Railway	1,43,813	11,731	.....	3,608	10,928	9,529	7,689	296,340
	Bengal Central Railway	35,831	.....	426	.....	9,373	1,636	.....	5,845
	North-Western Railway	1,38,630	73	114	.....	...	612	.....	190,470
	Railways under the Government Examiner of Railway Accounts, Bombay	1,04,819	9,583	48	12	.....	2	.....	21,700
,, road		2,96,073	7,006	555	.....	6,076	7,994	692	6,003
,, sea		2,38,332	3,572	1,112	5,039	3,484	105	.....	4,315,050
Total	1902	1,41,76,113	91,508	15,757	20,045	712,131	33,901	331,353	7,669,895
	1901	1,07,08,843	87,804	14,130	25,040	640,986	23,997	248,759	8,122,945
	1900	1,15,05,638	1,56,355	12,470	15,554	592,878	26,513	247,522	7,788,601

July 1st 1902

J. E. O'CONOR,
Director-General of Statistics

W. C. MACPHERSON,
Offg. Secretary to the Government of Bengal

Vital Statistics of the Districts of Bengal for the month of April 1902.

Divisions.	Districts.	Population under registration.	BIRTHS.		DEATHS.																AVERAGE OF CORRESPONDING MONTH OF PREVIOUS FIVE YEARS.		Remarks.
					Cholera.		Small-pox.		Plague.		Fever.		Dysentery and Diarrhœa.		Respiratory diseases.		Injury.		Other causes.		Total of all causes.				
			Number registered.	Ratio per 1,000 of population per annum.	Number registered.	Ratio per 1,000 of population per annum.	Number registered.	Ratio per 1,000 of population per annum.	Number registered.	Ratio per 1,000 of population per annum.	Number registered.	Ratio per 1,000 of population per annum.	Number registered.	Ratio per 1,000 of population per annum.	Number registered.	Ratio per 1,000 of population per annum.	Number registered.	Ratio per 1,000 of population per annum.	Number registered.	Ratio per 1,000 of population per annum.	Number registered.	Ratio per 1,000 of population per annum.	Number registered.	Ratio per 1,000 of population per annum.	
1	2	3	4	5	6	7	8	9	10	11	12	13	14	15	16	17	18	19	20	21	22	23	24	25	26
Burdwan	Burdwan	1,532,475	5,512	43·08	849	6·69	43	·34	...	...	2,874	22·44	108	·84	...	...	27	·12	983	7·68	4,884	38·16	3,586	28·08	
	Birbhum	902,280	3,407	45·24	138	1·80	4	·04	...	...	1,520	20·16	10	·12	...	...	17	·12	838	7·08	2,227	29·52	2,511	26·88	
	Bankura	1,116,411	3 928	42·12	294	3·12	282	3·00	...	...	2,105	22·56	61	·64	3	·01	60	·24	1,192	5 04	11,212	48·12	6,126	26 28	
	Midnapore	2,789,114	8,569	36 84	357	3 60	3,375	14 52	1	·003	5,506	23 64	218	1 80	25	·24	36	·36	518	5·88	5,143	35·88	2,866	39 76	
	Hooghly, including Serampore.	1,049,282	3,351	38·28	368	4·20	65	·72	26	·24	1,947	22·20	158	1 80											
	Howrah	850,514	2,433	34·32	1,155	6 60	235	1·32	6	·02	2,502	14 88	140	·72	4	·02	41	·48	540	7·56	2,613	36·84	2,080	28·56	
	24-Parganas	2,078,359	6,274	36·12	550	3·16	23	·36	2,551	35·76	354	4 92	328	4·56	183	2·52	118	60	646	3·72	4,891	28 20	3 769	21 72	
	Calcutta	847,796	906	12·72	2,460	17·64	9	·06	2	·01	4,857	34·92	14	·09	...	...	51	·36	770	5 52	8,163	58 68	4,469	32·16	
Presidency	Nadia	1,667,491	7,193	51·72	2,460	17·64	11	·09	...	...	3,208	28·80	3	·02	...	...	55	·24	589	3·84	6,058	40 08	5,575	36 84	
	Murshidabad	1,333,184	6,118	45·96	184	1·56	14	·08	...	...	4,614	30·48	17	·10	1	·006	59	·48	718	7 08	2,846	27·24	2,949	28 20	
	Jessore	1,813,155	7,276	48·12	769	5·04	14	·03	...	...	1,662	15·84	24	·12	4	·03	50	·36	409	3 24	6,163	50 52	4,873	39 96	
	Khulna	1,253,048	4,967	47·52	346	3 24	4	·08	...	...	4,775	39 12	15	·12	3	·01	25	·12	396	3·00	6,350	48 60	5,331	40 80	
	Rajshahi	1,462,467	7,029	57 60	905	7·32	11	·08	...	...	5,487	42 00	8	·06	3	·01	25	·12	396	3·00	2,728	41·52	2,365	36·00	
	Dinajpur	1,567,080	9,456	72·32	53	·36	378	2·88	...	...	2,647	40·32	13	·12	...	...	12	·12	65	3 12	802	38 52	877	42·24	
	Jalpaiguri	787,380	2,880	43·80	3	·03	28	·36	...	...	649	31 20	78	3 72	1	·04	8	·36	231	1 20	6,741	37 44	6,047	33·60	
Rajshahi	Darjeeling	249,117	758	36·48	1	·04	...	...	...	...	5,966	33·12	10	·04	...	...	12	·06	228	3·12	6,289	37 68	1,998	27 96	
	Rangpur	2,154,181	8,295	46·20	65	·36	457	2·52	...	...	1,891	26·52	21	·24	1	·01	37	·36	257	2·16	7,469	63·24	4,573	38 52	
	Bogra	854,853	3,808	53·40	447	6 24	74	·96	...	...	5,843	49 32	27	·12	...	...	35	·24	257	2·16	8,153	36·84	7,423	33·60	
	Pabna	1,420,461	4,677	39·48	1,161	9 72	156	1 20	...	...	4,573	20 64	224	·96	29	·12	40	·12	1,329	6 00	9,408	28·80	8,410	25 68	
	Dacca	2,049,522	9,124	41·24	1,882	8 52	73	·24	3	·01	6,593	20·16	99	·24	...	...	74	·12	1,185	3·00	2 922	61 44	7,477	46 20	
Dacca	Mymensingh	3,915,068	18,004	39·84	1,041	3·12	413	1·20	3	·008	5,784	35·76	71	·36	...	...	50	·24	1,023	6·24	6,886	36 00	7,428	38 88	
	Faridpur	2,231,752	9,256	48·36	1,168	6 00	6	·02	...	...	3,676	18 72	30	·12	...	...	169	·48	1,927	10·44	6,886	36 00	4,807	27 12	
	Backergunge	2,117,991	7,492	42·36	319	1·20	85	·48	...	...	2,314	13·08	44	·24	22	·10	78	·36	877	4 92	3,633	20 52	3,677	38·64	
	Tippera	1,141,723	5,405	57·72	53	·48	3	·02	...	...	2,457	25·80	8	·08	...	...	53	·48	376	3 84	2,950	30 96	3,279	29 04	
Chittagong	Noakhali	1,353,250	4,948	43·80	22	·12	4	·02	...	...	2,417	21·36	6	04	...	...	77	·60	140	1 20	2,670	23·64			Not under registration.
	Chittagong																								
	Chittagong Hill Tracts																								
	Patna	1,624,985	4,473	33·00	854	6 24	1,033	7 56	369	2 64	1,827	13 44	538	3 96	59	·36	79	·48	1,935	14 16	6,634	49 32	6,094	44 40	
	Gaya	2,059,933	5,289	30 69	118	·60	578	3 36	4	·01	3,208	18·60	45	24	...	...	52	·24	635	3 84	4,657	27 12	5,593	32 52	
	Shahabad	2,409,589	8,704	43·32	31	·12	27	·12	168	96	2,644	16·08	19	·10	...	...	80	·36	3,103	15·36	4,447	47 04	4,545	32 76	
Patna	Saran	1,962,696	5,624	34 39	177	·84	101	·48	1,586	9 36	3,502	17 40	598	2·88	...	...	37	·24	1,160	7 68	5,153	34 56	3,783	25 08	
	Champaran	1,790,463	6,963	46·56	49	·24	58	·36	...	...	3,845	25·68	19	12	...	...	62	·24	1,870	6 72	10,193	44 40	3,720	24 84	
	Muzaffarpur	2,754,790	11,003	47 88	175	·72	82	·24	104	·36	7,460	32 40	193	84	...	...	43	·19	1,271	5 16	9,043	37 20	6 203	25·44	
	Darbhanga	2,912,611	11,787	48 48	722	3·12	46	·12	781	3 12	6,630	27 24	117	·48	...	...	105	·60	697	3 96	7,139	41·40	5,019	29 04	
	Monghyr	2,068,834	6,944	39 96	1,351	7·80	300	1 68	425	2 40	4,229	24 48	32	·12	...	...	27	·12	579	3·24	5,573	31 92	5,756	33 00	
	Bhagalpur	2,088,953	7,117	40 80	491	2·76	69	·36	...	...	4,384	25 08	23	·12	...	...	31	·12	292	1 80	6,248	39 96	11,527	73·68	
Bhagalpur	Purnea	1,874,794	8,327	53·28	18	·10	161	·96	...	...	5,750	36·72	6	·03	...	...	12	·12	213	2 76	2,638	36 00	2,198	29 76	
	Malda	854,090	4,149	56 28	253	3 36	20	24	...	...	2,154	29 16	7	08	...	...	22	·12	421	2 76	3,625	24·00	2,842	18·84	
	Santhal Parganas	1,809,737	5,987	39 60	85	·48	224	1 44	1	·006	2,856	18 84	15	09	1	·009	84	·48	1,561	9·00	6,067	33 28	5,803	33 72	
	Cuttack	2,092,758	7,334	42 60	487	2·76	548	3 12	8	·03	2,620	15 24	716	4·32	15	·07	44	·48	1,055	11 76	3 135	35 04	2,876	39·16	
Orissa	Balasore	1,071,197	4,935	55·56	470	5 16	311	3·48	1	·01	1,648	12·12	166	1 80	...	...	42	·48	1,050	12·36	2,434	28 68	2,781	32 76	Not under registration.
	Puri	1,017,224	2,922	34·44	118	1·32	129	1 44	...	...	635	7 44	459	5 40	1	·01									
	Angul and Khondmals																								
	Hazaribagh	1,177,961	4,887	49 68	12	·12	112	1 08	15	·12	2,189	22 20	56	·48	31	·24	42	·36	590	6·00	3,047	30 96	2,463	25·08	
	Ranchi	1,187,925	4,677	47 40	...	...	20	·12	...	...	1,961	19·80	115	1 08	...	...	44	·36	921	9 24	3,061	30 84	2,141	21 60	
Chota Nagpur.	Palamau	619,800	2,446	47 28	5	·09	108	2 04	...	...	1,132	21 84	13	24	...	...	33	·60	246	4·68	1,537	29 76	1,381	26·64	
	Manbhum	1,301,364	4,276	39 36	75	·60	852	6 00	...	...	2,682	24 48	32	24	...	...	36	·24	713	6 48	4,163	38 40	2,476	22 80	
	Singhbhum	613,579	2,136	41·76	91	1 68	633	12·36	...	...	962	18 72	21	·36	...	...	25	·48	164	3·12	1,893	36 96	1,077	21·00	
	Total	74,428,198	272,056	43·80	24,039	3 84	11,026	1·68	6,397	·96	149,076	24·00	5,251	·84	384	·0	2,164	·24	35,858	5 76	234,195	37 68	197,679	31 80	
	Average of corresponding month of previous five years	.....	221,941	35·76	24,664	3·96	3,301	·48	Data not available.		132,018	21·24	4,098	·60	Data not available.		2,009	·24	31,589	5·04	197,679	31·80	...	...	
	Difference + or −	.....	+50,096	+8 04	−625	−·12	+7,725	+1·20	...	...	+17,058	+2 76	+1,153	+·24	...	...	+155	Equal	+4,289	+·72	+36,516	+5 88	...	...	

H. J. DYSON, *Major*, I.M.S., C.S.I.,
Sanitary Commissioner for Bengal.

OFFICE OF SANITARY COMMISSIONER FOR BENGAL,
The 6th June 1902.

Vital Statistics of Towns in Bengal with a population of 20,000 and over during the month of April 1902.

Districts.	Towns.	Population under registration.	BIRTHS.		DEATHS.																AVERAGE OF CORRESPONDING MONTH OF PREVIOUS FIVE YEARS.		Remarks.
					Cholera.		Small-pox.		Plague.		Fever.		Dysentery and Diarrhœa.		Respiratory diseases.		Injury.		Other causes.		Total of all causes.				
			Number registered.	Ratio per 1,000 of population per annum.	Number registered.	Ratio per 1,000 of population per annum.	Number registered.	Ratio per 1,000 of population per annum.	Number registered.	Ratio per 1,000 of population per annum.	Number registered.	Ratio per 1,000 of population per annum.	Number registered.	Ratio per 1,000 of population per annum.	Number registered.	Ratio per 1,000 of population per annum.	Number registered.	Ratio per 1,000 of population per annum.	Number registered.	Ratio per 1,000 of population per annum.	Number registered.	Ratio per 1,000 of population per annum.	Number registered.	Ratio per 1,000 of population per annum.	
1	2	3	4	5	6	7	8	9	10	11	12	13	14	15	16	17	18	19	20	21	22	23	24	25	26
Burdwan	1. Burdwan	35,022	48	16·44	8	2·64	2	·60	..	..	51	17·40	11	3·72	...	...	2	·60	23	7·80	97	33·12	91	31·08	
Bankura	2. Bankura	20,737	39	22·56	14	8·04	42	24·24	..	..	30	17·28	2	1·08	...	...	1	·48	14	8·04	103	59·52	28	16·20	
Midnapore	3. Midnapore	33,140	52	18·72	1	·36	28	10·08	..	..	50	18·00	14	5·04	...	...	...	...	21	7·56	114	41·16	94	33·96	
Hooghly	4. Hooghly and Chinsura	29,383	77	31·44	33	13·44	...	...	2	·72	37	15·00	20	8·16	9	3·60	3	1·20	23	9·36	127	51·84	122	49·80	
	5. Serampore	44,461	71	19·08	26	6·96	3	·72	...	...	68	18·24	11	2·88	...	...	3	·72	19	5·04	130	35·04	150	40·44	
Howrah	6. Howrah	157,594	306	23·28	193	15·12	2	·12	75	5·64	324	24·60	93	7·08	6	·36	8	·60	133	9·96	339	63·84	496	37·68	
	7. Cossipore-Chitpur	40,750	45	13·20	20	5·88	2	·48	...	...	20	7·32	8	2·88	...	...	1	·24	5	1·44	66	19·32	45	13·20	
	8. Maniktala	32,367	43	15·84	8	2·88	1	·36	...	...	30	13·56	3	1·32	...	...	...	...	4	1·44	41	15·12	44	16·20	
24-Parganas	9. South Suburban	26,374	37	25·92	3	1·32	...	...	...	...	33	13·92	10	4·20	...	...	2	·84	..	...	48	19·56	Data not available.		
	10. Garden Reach	28,211	37	15·72	2	·84	1	·36	...	...	28	11·76	6	2·76	...	...	...	...	...	...	75	35·28	113	52·80	
	11. Barnagore	25,453	29	13·68	35	16·44	1	·36	...	...	38	17·64	2	·96	...	...	3	1·32	5	2·28	79	39·84	75	37·80	
	12. Naihati	25,753	69	34·80	38	19·08	...	...	...	...	18	9·96	1	·48	...	...	...	...	4	2·16	67	48·36	Data not available.		
	13. Bhatpara	21,840	25	13·92	84	55·64	...	...	...	...	354	4·92	328	4·56	182	2·52	37	·48	701	9·84	4,742	67·08	2,688	42·24	
Calcutta	14. Calcutta	847,796	906	12·72	580	8·16	29	·36	2,531	35·76	31	15·12	1	·48	...	...	...	...	9	4·32	59	28·80	65	32·16	
Nadia	15. Krishnagar	24,547	71	34·68	18	8·76	...	...	...	...	44	19·56	1	·36	...	...	3	1·32	21	9·36	108	47·28	63	28·08	
	16. Santipur	26,598	89	39·60	37	16·44	...	...	...	...	62	30·48	...	...	...	...	...	...	1	·48	74	35·40	64	31·44	
Murshidabad	17. Berhampore	24,397	47	23·04	9	4·32	...	...	...	...	34	18·84	7	3·84	...	...	...	...	10	5·52	57	31·68	55	30·48	
Rajshahi	18. Rampur Boalia	21,589	55	30·48	6	3·24	...	...	...	...	61	31·56	7	3·60	...	...	...	...	2	·96	74	38·40	46	23·88	
Pabna	19. Sirajganj	23,114	52	26·88	1	·48	3	1·44	...	...	85	11·16	12	1·56	...	...	...	...	74	9·72	190	25·08	256	33·84	
Dacca	20. Dacca	90,542	185	24·48	19	2·40	...	...	...	...	10	4·80	6	2·88	...	...	...	...	17	8·28	34	16·56	34	16·56	
	21. Narayanganj	24,472	43	21·00	1	·48	...	...	...	...	33	17·88	...	...	...	...	1	·48	1	·48	39	21·12	46	24·84	
Chittagong	22. Chittagong	22,140	34	18·36	4	2·16	...	...	...	...	186	16·44	75	6·60	1	·08	9	·72	177	15·72	1,061	94·44	599	53·28	
Patna	23. Patna City	134,785	317	28·20	565	50·28	43	3·72	5	·36	37	9·84	5	1·32	...	...	2	·48	35	9·24	94	24·96	129	34·32	
	24. Bihar	42,063	109	28·92	6	1·56	9	2·28	...	...	54	19·20	4	1·32	...	...	8	2·76	51	18·12	131	46·56	134	47·64	
	25. Dinapore	33,699	86	30·60	7	2·40	7	2·40	...	...	113	18·96	18	3·00	...	...	3	·48	66	11·04	229	38·52	241	41·52	
Gaya	26. Gaya	71,288	163	27·24	23	3·84	6	·96	..	...	9	2·28	10	2·52	...	...	1	·24	13	3·36	83	16·39	263	68·28	
Shahabad	27. Arrah	46,170	51	13·20	...	...	...	...	29	7·68	26	13·08	...	...	...	...	3	1·44	9	4·56	38	19·20	56	28·32	
	28. Sasaram	23,644	70	35·52	...	...	...	...	...	...	115	30·00	34	8·88	...	...	4	·96	63	16·44	364	95·16	140	36·60	
Saran	29. Chapra	45,901	96	25·08	1	·24	4	·96	143	37·32	46	22·32	6	2·88	...	...	...	...	35	16·92	87	42·24	65	31·56	
Champaran	30. Bettiah	24,696	78	37·80	...	...	...	...	...	...	97	25·44	27	7·08	...	...	...	...	48	12·00	252	66·24	101	26·52	
Muzaffarpur	31. Muzaffarpur	45,617	123	32·28	62	16·20	20	5·16	...	...	50	27·96	8	4·44	...	...	2	1·08	69	38·64	177	99·24	96	53·76	
	32. Hajipur	21,398	59	33·00	...	...	3	1·68	45	25·20	31	5·52	24	4·32	...	...	1	·12	155	28·56	378	68·40	210	38·04	
Darbhanga	33. Darbhanga	66,244	212	38·40	9	1·56	1	·12	154	27·84	30	12·96	4	1·32	...	...	4	1·32	42	14·04	229	76·56	153	50·76	
Monghyr	34. Monghyr	35,880	128	42·72	44	14·64	...	...	96	32·04	106	16·68	5	·72	...	...	1	·12	26	4·08	142	22·44	137	21·60	
Bhagalpur	35. Bhagalpur	75,760	163	28·80	4	·60	...	...	...	...	42	9·72	17	3·96	...	...	1	·12	24	5·52	88	20·52	102	23·76	
Cuttack	36. Cuttack	51,564	93	21·72	2	·36	2	·36	...	...	11	6·24	3	1·08	...	...	2	1·08	10	5·64	30	17·16	50	28·68	
Balasore	37. Balasore	20,880	56	32·16	...	...	5	2·76	...	...	30	7·20	21	5·04	1	·24	...	...	39	9·48	99	24·00	87	21·12	
Puri	38. Puri	49,334	38	9·24	7	1·68	1	·24	...	...	7	3·12	3	1·32	...	...	...	...	5	2·28	15	6·84	46	21·24	
Ranchi	39. Ranchi	25,970	23	10·56	...	...	...	...	...	...															
	Total of all towns with a population of 20,000 and over	2,441,962	4,263	20·88	1,856	9·12	215	·96	3,081	15·12	2,456	12·00	822	3·96	199	·96	105	·48	1,958	9·60	10,692	52·44	7,583	37·20	
	Average of the corresponding month of previous five years	.....	3,956	19·44	615	3·96	252	1·20	Data not available.		2,850	13·92	643	3·12	Data not available.		102	·48	2,920	14·28	7,582	37·20	...	...	
	Difference + or −	.....	+307	+1·44	+1,041	+5·16	−37	−24	...	...	−394	−1·92	+179	+·84	...	...	+3	Equal	−962	−4·68	+31·10	+15·24	...	...	

OFFICE OF SANITARY COMMISSIONER FOR BENGAL,
The 27th June 1902.

H J DYSON, *Major*, I.M.S., F.R.C.S.,
Sanitary Commissioner for Bengal.

IRRIGATION DEPARTMENT, BENGAL.

Statement showing heights over mean sea-level and low water in the rivers Ganges, Bhagirathi, Jalangi, and Brahmaputra for the month of May 1902, and the highest reading of each gauge over M. S. L. since 1876.

Date.		River Ganges.																River Bhagirathi.		River Jalangi.		River Brahmaputra.	
		Mirsapore.		Benares.		Buxar.		Dinapore.		Monghyr.		Sahibganj.		Rampur Boalia.		Goalundo.		Berhampore.		Saruppanj.		Gauhati.	
	Distance in miles.	From Allahabad ... 86		From Allahabad ... 134	From Mirzapore ... 48	From Benares 90		From Benares 177	From Buxar 87	From Benares 287	From Dinapore 110	From Benares 361	From Monghyr 94	From Benares 471	From Sahibganj ... 90	From Benares 691	From Rampur Boalia ... 120						
	Highest Gauge Reading.	26th August 1889. 253·47		26th August 1889. 241·96		31st August 1898. 200·63		5th September 1901. 169·73		5th September 1901. 129·60		23rd August 1879. 96·25		26th August 1879. 69·25		20th August 1893. 31·52		14th August 1890. 64·70		25th September 1900. 36·90		27th July 1900. 179·41	
		Height over zero of gauge.	Height over mean sea-level.	Height over zero of gauge.	Height over mean sea-level.	Height over zero of gauge.	Height over mean sea-level.	Height over zero of gauge.	Height over mean sea-level.	Height over zero of gauge.	Height over mean sea-level.	Height over zero of gauge.	Height over mean sea-level.	Height over zero of gauge.	Height over mean sea-level.	Height over zero of gauge.	Height over mean sea-level.	Height over zero of gauge.	Height over mean sea-level.	Height over zero of gauge.	Height over mean sea-level.	Height over zero of gauge	Height over mean sea-level.
1	2	3	4	5	6	7	8	9	10	11	12	13	14	15	16	17	18	19	20	21	22	23	24
		Below zero.		Below zero.		Below zero.						Below zero.		Below zero.									
1st ...	...	1·67	204·55	2·78	194·07	0·33	168·72	0·90	135·13	0·25	102·10	2·67	65·33	1·10	40·90	5·33	14·27	2·12	35·96	2·80	7·10	11·80	160·56
2nd ...	...	1·67	204·55	2·77	194·03	0·42	168·63	0·90	135·13	0·25	102·10	2·75	65·25	1·12	40·88	5·30	14·44	2·12	35·96	2·80	7·10	13·10	161·86
3rd ...	...	1·83	204·37	2·79	194·01	0·42	168·63	1·00	135·23	0·25	102·10	2·75	65·25	1·12	40·88	5·50	14·44	2·12	35·96	2·80	6·90	14·00	162·76
4th ...	...	2·00	204·23	2·83	193·97	0·42	168·63	1·00	135·23	0·25	102·10	2·75	65·25	1·15	40·85	5·58	14·52	2·12	35·96	2·50	6·90	13·80	162·56
										Below zero.													
5th ...	...	2·00	204·22	2·87	193·93	0·50	169·55	1·00	135·23	0·17	101·68	2·83	65·17	1·17	40·83	6·08	15·02	2·12	35·96	2·70	7·00	13·05	160·81
6th ...	...	2·08	204·14	2·94	193·86	0·50	168·55	1·00	135·23	0·33	101·52	2·83	65·17	1·19	40·81	7·42	16·36	2·12	35·96	3·00	7·30	11·80	160·56
7th ...	...	2·17	204·05	2·98	193·82	0·50	168·55	1·00	135·23	0·33	101·52	2·92	65·08	1·21	40·79	7·92	16·86	2·10	35·94	3·50	7·80	11·40	160·16
8th ...	...	2·17	204·05	3·00	193·80	0·50	168·55	1·00	135·23	0·42	101·43	2·92	65·08	1·23	40·77	8·17	17·11	2·10	35·94	4·40	8·70	10·70	159·46
9th ...	...	2·25	204·97	3·04	193·76	0·50	168·55	1·00	135·23	0·42	101·43	3·00	65·00	1·23	40·77	8·33	17·27	2·10	35·94	4·40	8·70	9·80	158·56
10th ...	...	2·33	203·89	3·06	193·72	0·50	168·55	1·00	135·23	0·42	101·43	3·00	65·00	1·23	40·77	8·42	17·36	2·08	35·93	5·10	9·40	8·90	157·66
11th ...	...	2·33	203·89	3·06	193·74	0·50	168·55	1·00	135·23	0·50	101·35	2·92	65·08	1·23	40·77	8·42	17·36	2·08	35·92	5·10	9·40	8·50	157·26
12th ...	...	2·33	203·89	3·04	193·76	0·50	168·55	1·10	135·33	0·50	101·35	2·92	65·08	1·25	40·75	8·42	17·19	2·08	35·92	5·00	9·30	8·10	156·86
13th ...	...	2·50	203·73	3·04	193·76	0·58	168·47	1·20	135·43	0·50	101·35	2·83	65·17	1·25	40·75	7·92	16·86	2·08	35·92	4·40	8·70	8·00	156·76
14th ...	...	2·50	203·72	3·06	193·74	0·58	168·47	1·30	135·53	0·58	101·27	2·75	65·25	1·27	40·73	7·75	16·69	2·08	35·92	3·20	7·50	8·00	156·76
										Above zero.													
15th ...	...	2·58	203·64	3·06	193·72	0·58	168·47	1·30	135·53	0·17	102·02	2·75	65·25	1·27	40·73	7·58	16·52	2·08	35·92	2·90	7·20	8·11	156·91
16th ...	...	2·67	203·55	3·10	193·70	0·58	168·47	1·30	135·53	0·17	102·02	2·67	65·33	1·27	40·73	7·17	16·11	2·08	35·92	2·90	7·20	8·40	157·16
17th ...	...	2·58	203·64	3·12	193·68	0·58	168·47	1·60	135·83	0·25	102·10	2·67	65·33	1·17	40·83	6·92	15·86	2·08	35·92	2·90	7·20	9·40	158·16
18th ...	...	2·50	203·72	3·17	193·63	0·67	168·38	1·90	136·13	0·42	102·27	2·58	65·42	1·04	40·96	6·92	15·86	2·08	35·92	2·90	7·20	10·20	158·96
19th ...	...	2·50	203·72	3·21	193·59	0·67	168·38	2·20	136·43	0·50	102·35	2·50	65·50	0·94	41·06	7·00	15·94	2·08	35·92	2·90	7·20	10·00	158·76
20th ...	...	2·42	203·80	3·25	193·55	0·67	168·38	2·70	136·93	0·67	102·52	2·42	65·58	0·85	41·15	7·17	16·11	2·10	35·94	3·70	8·00	11·80	160·56
21st ...	...	2·33	203·89	3·29	193·51	0·67	168·38	2·90	137·13	0·67	102·52	2·33	65·67	0·77	41·23	7·58	16·52	2·10	35·94	4·20	8·50	14·40	163·16
22nd ...	...	2·33	203·89	3·31	193·49	0·67	168·38	3·10	137·33	0·75	102·60	2·17	65·83	0·60	41·40	8·25	17·19	2·12	35·96	4·28	8·58	15·10	163·86
23rd ...	...	2·25	203·97	3·33	193·47	0·67	168·38	3·20	137·43	0·83	102·68	2·08	65·92	0·45	41·55	8·50	17·44	2·12	35·96	4·00	8·30	14·40	163·16
24th ...	...	2·25	203·97	3·37	193·43	0·67	168·38	3·30	137·53	0·83	102·68	2·00	66·00	0·39	41·61	8·83	17·77	2·12	35·96	4·00	8·30	13·50	162·26
25th ...	...	2·25	203·97	3·42	193·38	0·67	168·38	3·50	137·73	0·83	102·68	1·92	66·08	0·21	41·79	9·67	18·61	2·14	35·98	4·50	9·10	12·40	161·16
26th ...	...	2·33	203·89	3·46	193·34	0·67	168·38	3·70	137·93	0·92	102·77	1·83	66·17	0·06	41·94	10·25	19·19	2·29	36·03	4·00	8·30	12·00	160·76
														Above zero.									
27th ...	...	2·33	203·89	3·50	193·30	0·67	168·38	3·70	137·93	0·75	102·60	1·75	66·25	0·15	42·15	10·25	19·19	2·35	36·09	4·80	9·10	11·55	160·31
28th ...	...	2·42	203·80	3·54	193·26	0·75	168·30	3·50	137·73	0·58	102·43	1·67	66·33	0·40	42·40	10·00	18·94	2·21	35·95	4·80	9·10	11·30	160·06
29th ...	...	2·42	203·80	3·58	193·22	0·75	168·30	3·50	137·73	0·83	102·68	1·58	66·42	0·55	42·55	9·67	18·61	2·21	35·95	4·80	9·10	11·00	159·76
30th ...	...	2·42	203·80	3·60	193·20	0·75	168·30	3·70	137·93	0·83	102·68	1·42	66·58	0·68	42·53	9·42	18·36	2·21	35·95	5·00	7·90	10·80	159·56
31st ...	...	2·33	203·89	3·62	193·18	0·83	168·22	3·90	138·13	0·92	102·77	1·33	66·67	0·73	42·73	9·25	18·19	2·29	36·03	3·60	7·90	11·00	159·76

DARJEELING,
The 25th June 1902.

R. C. EDGE,
Under-Secy. to the Govt. of Bengal.

GOVERNMENT OF BENGAL, IRRIGATION DEPARTMENT.

Approximate return of traffic on the Circular and Eastern Canals for the week ending Saturday, the 28th June 1902, as compared with the corresponding week of the previous year.

Nature of Cargo.	Week ending Saturday, the 28th June 1902.			Week ending Saturday, the 29th June 1901.		
	Number of boats.	Weight of cargo.	Tollage.	Number of boats.	Weight of cargo.	Tollage.
		Mds.	Rs		Mds	Rs.
Rice and paddy	427	60,575	687	184	31,405	313
Jute	28	18,450*	223	16	5,500†	85
Firewood	53	37,875	595	37	31,050	460
Other articles	712	2,32,162	2,764	538	1,36,237	1,717
Total ...	1,220	3,49,062	4,199	775	2,04,192	2,575

* Weight by canal measurement, 18,900 maunds.
† Ditto ditto 5,767½ „

Results of the Meteorological Observations taken at the Alipore Observatory from 22nd to 28th June 1902.

Month.	Date.	Maximum in sun.	Number of hours of bright sunshine.	Mean pressure barometer at 32° Fahr.	Temperature. Mean.	Maximum.	Range.	Minimum.	Hygrometry. Mean wet bulb.	Vapour tension.	Dew point.	Humidity.	Wind. Prevailing direction.	Miles recorded.	Rain.	Weather.
1902.		°		Inches.	°	°	°	°	°	Inch.	°	%			Inches.	
June	22nd	147·9	8·0	29·588	86·4	92·9	14·4	78·5	82·2	1·054	80 8	83	SSW and S ...	214	0·20	Partially cloudy, p.
,,	23rd	147·9	8·3	·533	88·1	97·5	22·0	75·5	81·4	0·987	78·8	75	SW by S and NW by W.	101	0·28	Partially cloudy, p.
,,	24th	152·1	4·7	·535	88·4	96·2	14·4	81·8	82·6	1·042	80·5	79	S ...	113	0·02	Chiefly cloudy, o, d.
,,	25th	147·9	8 3	·611	89·3	96·5	14·7	81·8	83·9	1·089	81·9	80	S and SSE ...	102	Nil	Partially cloudy.
,,	26th	147·9	4·8	·690	85·8	93·5	16·0	77·5	82·1	1·050	80·7	85	SW by W and SSE	82	0·79	Chiefly cloudy, o, p.
,,	27th	152·6	7·8	·672	87·6	94·5	15·5	79·0	82 9	1·065	81·2	82	SSE and S ...	116	Nil	Partially cloudy.
,,	28th	147·9	8·2	·594	87·6	93·9	11·9	82·0	82·5	1·044	80·5	80	S ...	143	Nil	Chiefly cloudy.

The mean pressure of the seven days	Inches.	29·603
The average pressure of the corresponding period for 24 years, Surveyor-General's Office		29·519
	Hours.	
The total number of hours of bright sunshine		45·1
The maximum possible number of hours of sunshine		94·3
The mean temperature of the seven days		87 6
The average temperature of the corresponding period for 24 years, Surveyor-General's Office		84·5
The extreme variation of temperature		22·0
The maximum temperature		97·5
	Miles.	
The highest velocity of the wind in one hour		14
	%	
The mean relative humidity		81
The average relative humidity of the corresponding period for 24 years, Surveyor-General's Office		84
	Inches.	
The total fall of rain from 22nd to 28th June 1902		1·29
The average fall of the corresponding period for 24 years, Surveyor-General's Office		2·48
The total fall from 1st January to 28th June 1902		21·56
The average fall of the corresponding period for 24 years, Surveyor-General's Office		20·46

The mean pressure, temperature, etc., are deduced from the traces of the Barograph and Thermograph, and from eye observations.

The maximum and minimum temperatures are obtained from self-registering thermometers. All the thermometers are verified and the readings have been corrected to a standard constructed and verified at the Kew Observatory. They are exposed under a thatched shed open at the sides, and are suspended four feet above the ground.

The barometer readings are corrected approximately to those of the standard, Newman's No. 86, formerly at the Surveyor-General's Office.

The hygrometric elements are obtained from Tables III, IV, and V of the official tables computed in the Meteorological Office, and based on Regnault's modifications of August's formula.

The directions and the movement of the wind are taken from the trace of a Beckley's anemograph.

The mouth of the rain-gauge is one foot above the ground.

o, overcast; d, drizzling rain; p, passing temporary showers.

METEOROLOGICAL OFFICE, GOVT. OF INDIA,
Alipore (Calcutta), the 30th June 1902.

G. W. KUCHLER,
for Meteorological Reporter to the Govt. of India and Director-General of Indian Observatories.

BENGAL CENTRAL RAILWAY COMPANY, LIMITED.

Abstract of principal Commodities carried over the Bengal Central Railway during the month of April 1902, as compared with the same month of previous year.

ARTICLES.	1902.		1901.		TOTAL.		Increase.	Decrease.
	Up.	Down.	Up.	Down.	1902.	1901.		
	Tons.	Tons.	Tons.	Tons.	Tons.	Tons.	Tons.	Tons.
I.—Apparel, including drapery, haberdashery, millinery, uniforms, accoutrements, boots and shoes.	5	1	3	.....	6	3	3	.....
II.—Coal and Coke carried for the Public and Foreign Railways.	2,311	95	2,290	.....	2,406	2,290	116	.....
III.—Cotton—								
1. Raw	.....	21	.....	15	21	15	6	.....
2. Manufactured—								
(a) Twist and yarn, European...	46	.....	33	.....	46	33	13	.....
(b) Ditto, Indian ...	.....	.....	1	.....	.....	1	.....	1
(c) Piece-goods, European ...	168	.....	107	.....	168	107	61	.....
(d) Ditto, Indian ..	1	.....	.....	1	1	1	..	.....
(e) Others	.....	.....	.....	.....	.....	.....	.....	.....
IV.—Chemicals, excepting saltpetre	.....	.....	.....	.....	.....	.....	.....	.....
V.—Drugs—								
1. Intoxicating, other than opium	1	.....	.....	.....	1	... ..	1	.....
2. Non-intoxicating—								
(a) Medical preparations ...	2	.....	.....	.....	2	.....	2	.....
(b) Others	.....	.....	.....	.....	.....	.....	.....	.....
VI.—Dyes and Tans—								
1. Indigo	.....	.....	.....	.....	.....	.....	.....	.....
2. Myrabolams	.....	.....	.....	.....	.....	.....	.....	.....
3. Cutch	.....	.....	.....	.....	.....	.....	.....	.....
4. Turmeric	1	80	10	34	81	44	37	.....
5. Alizarine and Aniline Dyes ..	.....	.....	.....	.....	.....	.....	.....	.....
6. Al (Morinda Citrifolia)	.....	.....	.....	.....	.....	.....	.....	.....
7. Tanning barks	.....	.....	.....	.....	.....	.....	.....	.....
8. Others	.....	.....	.....	.....	.....	.....	.....	.....
VII.—Fodder—								
1. Oilcake	125	7	48	17	132	65	67	.....
2. Hay, straw and grass	.....	.....	.....	.....	.....	.....	.....	.....
VIII.—Fruits and vegetables, fresh	347	515	4	400	862	404	458	.....
IX.—Grain and Pulse—								
1. Wheat	8	90	10	80	98	90	8	.....
2. Rice in the husk	13	22	14	50	35	64	.....	29
3. Do. not in the husk	.....	.....	.....	.....	.....	.....	.....	.....
4. Jawar and bajra	56	281	39	196	337	235	102	.....
5. Gram and pulse	28	.....	17	.....	28	17	11	.....
6. Wheat flour	1	.....	1	.....	1	1	... ..	.....
7. Others								
X.—Hides and Skins—								
1. Hides of cattle—								
(a) Dressed or tanned	.....	.....	.....	.....	.....	.....	... ..	.....
(b) Raw	23	.....	4	19	23	23	.....	.....
2. Skins of sheep and other animals—								
(a) Dressed or tanned	.....	.....	.....	.....	.....	.....	.....	.....
(b) Raw	2	.....	.....	4	2	4	.....	2
XI.—Horns	.....	.....	.....	.....	.....	.....	.....	.....
XII.—Hemp (Indian) and other fibres, excluding jute.	11	.....	.....	60	11	60	.....	49
XIII.—Jute—								
1. Raw	.....	963	.....	73	963	73	890	.....
2. Gunny-bags and cloth	15	3	6	7	18	13	5	.....
XIV.—Lac	.....	.....	.....	.....	.....	... ..	.....	.....
XV.—Leather—								
1. Unwrought	.....	.....	.....	.....	.. ..	.....	.....	.....
2. Wrought, excepting boots and shoes.	.....	.....	.....	.....	.....	.....	.....	.....
XVI.—Liquors—								
1. Ale and beer	.....	.....	.....	.....	.....	.....	.....	.....
2. Spirit of all kinds, including country spirit.	.....	.....	.....	.....	.....	.....	.....	.....
3. Wine	3	.....	4	.....	3	4	.. ..	1
4. All other sorts, including toddy and fermented liquor, other than ale and beer.	.....	.....	.....	.....	.....	... ..	... ..	.....
XVII.—Metals—								
1. Copper, unwrought	.....	.....	.....	.....	.....	.....	.....	.....
2. Brass, ditto	.....	.....	.....	1	.....	1	.....	1
3. Copper, wrought	5	.....	.....	.....	5	.....	5	.....
4. Brass, ditto	55	8	6	1	63	7	56	.....
5. Iron and steel—								
(a) Cast	... ..	.....	.....	.....	.....	.....	.....	.....
(b) Unwrought	... ..	.....	.....	.....	.....	.....	.....	.....
(c) Wrought	59	.....	... .	14	59	14	45	.....
(d) Manufactured	1	.....	2	.....	1	2	.....	1
6. Others	40	25	33	19	65	52	13	... ..
XVIII.—Oils—								
1. Kerosine	174	.....	221	.....	174	221	.....	47
2. Castor	.....	.....	.....	.....	.....	.....	.....	.....
3. Cocoanut	19	.....	12	.....	19	12	7	.....
4. Mustard and rape	97	.....	81	.....	97	81	16	.....
5. Others	1	.....	.....	2	1	2	.....	1
XIX.—Oilseeds—								
1. Linseed	.....	336	7	408	336	415	.....	79
2. Rape and mustard...	249	68	203	138	317	401	.....	84
3. Til or jinjili	.....	.....	.....	.....	... .	.....	.....	.....
4. Poppy	.....	.....	.....	18	.....	18	.....	18
5. Earthnuts	.....	.....	.....	.....	.....	.....	.....	.....
6. Castor...	.....	.....	.....	.....	.....	.....	.....	.....
7. Others	.....	.....	.....	4	... .	4	.....	4
XX.—Opium	1	.....	.....	.....	1	.....	.....	.....
XXI.—Paper and Pasteboard	11	.....	13	1	11	14	.....	3
XXII.—Provisions—								
1. Ghee	4	.....	2	.....	4	2	2	.....
2. Dried fruits and nuts	.....	2	.....	1	2	1	.....	.....
3. Others	2	11	.....	6	13	6	7	.....

ARTICLES.	1902.		1901.		TOTAL.		Increase.	Decrease.
	Up.	Down.	Up.	Down.	1902.	1901.		
	Tons.	Tons.	Tons.	Tons.	Tons.	Tons.	Tons.	Tons.
XXIII.—Railway plant and rolling-stock carried for the Public and Foreign Railways—								
1. Locomotives, engines, and tenders, and parts thereof.	.....	.....	.....	.....	.....	.....	.....	.....
2. Carriages and trucks, and parts thereof.	.....	.....	.....	.....	.....	.....	.....	.....
3. Materials—								
(a) Steel rails and fish-plates	.....	.....	.....	.....	.....	.....	.....	.....
(b) Sleepers and keys of steel and cast-iron.	.....	.....	.....	.....	.....	.....	.....	.....
(c) Other sorts	.....	.....	.....	.....	.....	.....	.....	.....
XXIV.—Salt	458	.....	231	.....	458	231	227	.....
XXV.—Saltpetre and other saline substances—								
1. Saltpetre	1	.....	.....	.....	1	.....	1	.....
2. Other saline substances	8	.....	1	.....	8	1	7	.....
XXVI.—Silk—								
1. Raw—								
(a) Foreign	.....	.....	.....	.....	.....	.....	.....	.....
(b) Indian	.....	.....	.....	.....	.....	.....	.....	.....
2. Silk piece-goods—								
(a) Foreign	.....	.....	.....	.....	.....	.....	.....	.....
(b) Indian	.....	.....	.....	.....	.....	.....	.....	.....
XXVII.—Spices—								
1. Betelnuts	5	146	.....	226	151	226	.....	75
2. Pepper	.....	.....	.....	.....	.....	.....	.....	.....
3. Ginger	.....	.....	.....	.....	.....	.....	.....	.....
4. Chillies	2	3	.....	10	5	10	.....	5
5. Cardamoms	.....	.....	.....	.....	.....	.....	.....	.....
6. Others	5	67	.....	113	72	113	.....	41
XXVIII.—Stone and lime	95	.....	81	63	95	84	11	.....
XXIX.—Sugar—								
1. Refined or crystallised, including sugarcandy.	49	.. ...	37	.....	49	37	12	.....
2. Unrefined—								
(a) Sugar	28	438	50	190	456	240	216	.....
(b) Gur, rab, molasses, jaggery, and other saccharine produce.	5	33	1	19	38	20	18	.....
XXX.—Tea—								
1. Foreign	.....	.....	.....	.....	.....	.....	.....	.....
2. Indian	.....	.....	.....	.....	.....	.....	.....	.....
XXXI.—Tobacco—								
1. Unmanufactured	100	24	33	168	124	201	.....	77
2. Manufactured—								
(a) Cigars	.....	.....	.....	.....	.....	.....	.....	.....
(b) Other sorts	.....	.....	1	.....	.....	1	.....	1
XXXII.—Wood—								
1. Timber, unwrought	180	25	28	79	305	101	104	.....
2. Manufactures	10	8	8	1	18	9	9	.....
XXXIII.—Wool—								
1. Raw	.....	.....	.....	.....	.....	.....	.....	.....
2. Manufactured—								
(a) Carpets and rugs	.....	.....	.....	.....	.....	.....	.....	.....
(b) Piece-goods, European ...	.....	.....	.....	.....	.....	.....	.....	.....
(c) Ditto, Indian ...	.....	.....	.....	.....	.....	.....	.....	.....
(d) Other sorts of manufactures.	.....	.....	.....	.....	.....	.....	.....	.....
XXXIV.—All other articles of merchandise ...	435	165	239	188	600	427	173	.....
Total ...	5,166	3,427	3,675	2,626	8,593	6,301	2,711	519

T. SIDDLE,

Chief Auditor and Accountant.

CALCUTTA, *the 26th June 1902.*

Weekly Return of Traffic Receipts on Indian Railways.

EAST INDIAN RAILWAY.

Approximate Return of Traffic for week ended 14th June 1902 on 1,905·37 miles open.

	Coaching Traffic.		Merchandise and Mineral Traffic.		Other earnings (estimated).	Total earnings.	Traffic Train-miles run.		
	Number of passengers.	Coaching receipts.	Weight carried.	Receipts.			Coaching.	Merchandise.	Total.
		Rs. A. P.	Mds. S.	Rs. A. P. (a)	Rs. A. P.	Rs. A. P.			
Total traffic for the week ...	430,448	3,96,422 5 0	56,58,135 0	9,61,665 1 0	26,083 0 0	13,84,170 6 0	107,408	205,467	312,875
Or per mile of railway ...	.....	208 0 11	.....	504 11 5	13 11 0	726 7 4	.....	.....	.....
For previous 22½ weeks of half-year.	8,977,548*	85,93,353 7 0*	13,06,43,450 30†	2,35,36,819 10 0†	5,61,282 0 0‡	3,26,91,455 1 0	2,435,656§	4,692,055§	7,127,711
Total for 23½ weeks ...	9,407,996	89,89,775 12 0	13,63,01,585 30	2,44,98,484 11 0	5,87,365 0 0	3,40,75,625 7 0	2,543,064	4,897,522	7,440,586
COMPARISON.									
Total for corresponding week of previous year.	473,753§	3,98,897 0 9	56,64,264 10	10,18,340 7 6	10,938 6 3	14,37,165 14 6	104,726§	203,412§	308,189§
Per mile of railway corresponding week of previous year.	.....	217 1 6	.....	554 3 4	10 13 6	782 2 4	.....	.....	.....
Total for corresponding 23½ weeks of previous year.	9,873,366	91,51,699 8 8	13,15,07,305 0	2,37,59,957 15 2	5,05,596 12 0	3,34,17,254 8 10	2,524,810§	4,839,260§	7,364,376§

(a) The decrease is chiefly in piece-goods and food-grains.

* Added number of passengers 15,024 and deducted Rs. 5,940 } on account of difference between the approximate and audited figures for the week ended 10th
† Do. Mds. 2,34,076 and deducted ,, 20,343 } May 1902.
‡ Do. ,, 2,455
§ Audited figures up to 10th May 1902.

1902. *Abstract of progressive weekly returns of all earnings for 1902 in comparison with 1901.*

Open mileage.	Period.	Coaching Traffic.		Merchandise and Mineral Traffic.		Other earnings.	Total.	Per mile of railway.	Train mileage.	
		No. of passengers.	Rs.	Mds.	Rs.	Rs.	Rs.	Rs.	No.	Rate. Rs. A. P.
* 1,837·46	11 days of Jan.	514,285	5,30,478	87,38,287	16,37,581	35,240	22,03,299	1,199	477,511	4 9 10
* 1,837·46	Week ended 18th ,,	372,213	3,44,786	50,37,926	9,42,291	22,393	13,09,470	713	301,302	4 5 6
* 1,838·04	,, ,, 25th ,,	364,471	3,57,440	62,64,836	10,66,158	27,348	14,50,946	789	313,092	4 10 2
* 1,838·04	,, ,, 1st Feb. ...	350,913	3,62,584	58,41,161	10,58,973	23,674	14,45,231	786	309,273	4 10 9
* 1,838·04	,, ,, 8th ,, ...	401,030	4,36,654	54,55,792	9,91,486	24,730	14,53,330	790	313,589	4 10 2
* 1,838·04	,, ,, 15th ,, ...	384,376	3,87,799	59,18,423	10,00,741	24,855	14,13,425	781	313,802	4 8 1
* 1,838·04	,, ,, 22nd ,, ...	420,832	4,02,919	57,93,285	10,30,612	26,991	14,60,522	795	315,838	4 10 0
* 1,838·04	,, ,, 1st March ,,	402,196	4,02,809	57,96,772	10,86,121	23,875	15,12,805	823	320,880	4 11 5
* 1,838·04	,, ,, 8th ,, ...	442,705	4,35,751	56,96,936	10,35,653	24,477	14,94,881	813	318,375	4 11 2
* 1,838·04	,, ,, 15th ,, ...	420,558	4,15,553	53,91,908	9,50,807	25,180	13,91,540	757	308,663	4 8 2
* 1,838·04	,, ,, 22nd ,, ...	385,421	4,12,265	55,25,831	10,10,494	27,637	14,50,416	789	316,847	4 9 3
* 1,838·04	,, ,, 29th ,, ...	352,747	3,70,815	47,04,603	8,32,537	22,583	12,15,935	662	304,485	3 19 11
* 1,838·04	,, ,, 5th April ...	376,494	3,83,340	54,53,121	9,60,537	24,132	13,68,020	744	306,485	4 7 5
* 1,838·04	,, ,, 12th ,, ...	388,982	3,48,170	59,47,885	11,13,803	22,565	14,84,538	808	323,691	4 9 5
* 1,838·04	,, ,, 19th ,, ...	395,171	3,50,967	62,66,909	11,22,041	27,143	15,09,151	821	324,748	4 10 4
* 1,838·04	,, ,, 26th ,, ...	420,878	3,75,797	62,39,565	11,16,880	26,919	15,19,596	827	322,110	4 11 6
* 1,866·90	,, ,, 3rd May ...	410,760	3,84,258	61,19,420	11,57,199	25,206	15,66,662	839	328,806	4 12 3
* 1,905 37	,, ,, 10th ,, ..	471,948	3,82,051	65,19,006	11,33,038	26,151	15,41,240	809	333,729	4 9 11
1,905·37	,, ,, 17th ,, ...	438,707	3,67,317	63,21,275	11,34,715	24,256	15,26,288	801	323,193	4 11 7
1,905·37	,, ,, 24th ,, ...	429,946	3,62,261	59,82 250	10,83,780	24,664	14,70,705	772	320,789	4 9 4
1,905·37	,, ,, 31st ,, ...	406,670	3,67,954	56,99,682	10,13,759	26,587	14,28,300	750	315,935	4 8 4
1,905·37	,, ,, 7th June ...	410,167	4,02,376	56,58,824	10,46,642	25,639	14,74,657	774	314,410	4 11 1
1,905·37	,, ,, 14th ,, ...	430,448	3,96,422	56,58,135	9,61,665	26,083	13,84 170	726	31,,875	4 6 9
	Totals up to date ...	9,407,996	89,89,775	13,63,01,586	2,44,98,485	5,87,365	3,40,75,625	779	7,440,586	4 9 3

* Audited figures.

Abstract of progressive weekly returns of all earnings for 1902 in comparison with 1901—concluded. *1901.*

		No. of passengers.	Rs	Mds.	Rs.	Rs.	Rs.	Rs.	No.	Rate Rs. A. P.
1,840·38	12 days of Jan. .	547,806	5,51,149	81,89,264	14,01,457	31,128	19,84,034	1,078	504,735	3 14 11
1,837·46	Week ended 19th ,, ...	346,696	4,08,076	53,61,885	8,93,150	19,362	13,19,888	718	293,648	4 7 11
1,837·46	,, ,, 26th ,, ...	401,800	4,35,561	55,25,923	8,73,134	19,646	13,28,401	723	300,006	4 6 10
1,837·46	,, ,, 2nd Feb. ...	427,911	4,37,311	56,02,489	9,08,909	21,404	13,62,685	742	298,708	4 9 0
1,837·46	,, ,, 9th ,, ...	440,078	4,42,255	57,28,933	9,79,358	23,738	14,45,351	787	304,065	4 12 1
1,837·46	,, ,, 16th ,, ...	426,574	4,58,190	56,70,066	9,83,444	23,808	14,65,442	798	302,736	4 13 5
1,837·46	,, ,, 23rd ,, ...	465,839	4,51,259	52,86,699	9,04,609	21,314	14,07,272	766	292,752	4 12 11
1,837·46	,, ,, 2nd March	435,219	4,39,873	58,69,541	9,88,607	21,327	14,49,507	789	3 0,494	4 13 3
1,837·46	,, ,, 9th ,, ...	401,951	4,22,8 2	55,80,201	9,40,463	21,(61	1 ,84,414	753	3 3,556	4 9 9
1,837·46	,, ,, 16th ,, ...	404,134	4 13,694	56,00,705	9,52. 79	22,210	13,8 ,983	755	30 .741	4 8 6
1,837·46	,, ,, 23rd ,, ...	362,038	3,75,302	55,66,466	9,43,312	23,037	13,81,711	754	298,025	4 10 2
1,837·46	,, ,, 30th ,, ...	376,859	3,09,742	62,78,839	10,44,480	22,385	14 30,533	782	305,729	4 11 2
1,837·46	,, ,, 6th April...	328,230	3,45,970	55,50,196	10,20,611	20,194	13,86,775	736	318,069	4 5 9
1,837 46	,, ,, 13th ,, ...	348,847	3,13,192	57,27,837	11,07,079	18,(87	14,38,; 58	783	322,3 0	4 7 5
1,837·46	,, ,, 20th ,, ...	362,372	3,51,075	60,11,022	11,25,806	23,408	15,02,289	818	325,700	4 9 9
1,837·46	,, ,, 27th ,, ...	352,369	3,45,807	58,64,7 9	10,79,165	20,790	14,45,771	787	320,503	4 8 1
1,837·46	,, ,, 4th May ...	308,384	3,49,575	56,00,009	11,04,448	20,825	14,74,848	8 3	323,420	4 9 0
1,837·46	,, ,, 11th ,,	388,203	3,32,611	53,88,3 5	10,75,136	22,016	14,30,363	778	323,430	4 6 9
1,837 46	,, ,, 18th ,, ...	395,035	3,37,288	61,50,3 5	11,88,074	21,209	15,41,031	83)	3 5,074	4 11 11
1,837 46	,, ,, 25th ,, ...	390,022	3,45,666	52,14,809	10,75,598	23,4 4	14,42,758	785	333,343	4 5 3
1,837 46	,, ,, 1st June ...	428,804	3,81,038	52,70,350	10,40,450	21,881	14,51,878	790	325,.47	4 7 4
1,837·46	,, ,, 8th ,, ...	460,795	4,15,046	56,57,540	10,73,022	23,027	15,11,095	823	318,024	4 11 11
1,837,46	,, ,, 15th ,, ...	473,753	3,98,897	56,64,264	10,18 310	10,9 9	14,37,106	782	308,130	4 10 7
	Totals up to date ...	9,373,366	91,51,699	13,15,0 ,305	2,37,59,958	5,05,597	3,34,17,254	787	7,364,576	4 8 8

TARKESSUR BRANCH RAILWAY.

Approximate Return of Traffic for week ended 14th June 1902 on 22·28 miles open.

	Coaching Traffic.		Merchandise and Mineral Traffic.		Other earnings (estimated).	Total earnings.	Traffic Train-miles run.		
	No. of passengers.	Coaching receipts.	Weight carried.	Receipts.			Coaching.	Merchandise.	Total.
		Rs. A. P.	Mds. S	Rs. A. P.	Rs. A. P.	Rs. A. P.			
Total traffic for the week ..	23,721	5,449 9 0	14,523 30	568 13 0	9 0 0	6,027 6 0	1,068	120	1,188
Or per mile of railway	.....	245 2 5	.....	25 9 5	0 6 6	271 2 2	... ...	.....	... ...
For previous 22½ weeks of half-year.	559,146*	1,41,901 13 0*	4,37,741 0†	17,453 3 0†	196 0 0	1,59,551 0 0	24,390‡	3,024‡	27,324
Total for 23½ weeks ...	581,867	1,47,351 6 0	4,52,264 20	18,022 0 0	205 0 0	1,65,578 6 0	25,368	3,144	28,512
COMPARISON.									
Total for corresponding week of previous year.	21,662	4,861 8 5	14,469 0	640 6 0	10 5 3	5,512 3 8	1,089	100	1,188
Per mile of railway corresponding week of previous year.	.....	218 11 1	.....	28 13 11	0 7 5	247 15 5	.....	.....	.....
Total for corresponding 23½ weeks of previous year.	609,142	1,52,782 14 2	4,45,392 0	18,502 11 0	183 11 0	1,71,469 4 2	25,536	2,976	28,512

* Added No. of passengers 911 and Rs. 90 } On account of difference between the approximate and audited figures for the week ended 10th May
† Deducted Mds. 680 and „ 18 } 1902.
‡ Audited figures up to 10th May 1902.

1902. *Abstract of progressive weekly returns of all earnings for 1902 in comparison with 1901.*

Open mileage.	Period.	Coaching Traffic.		Merchandise and Mineral Traffic.		Other earnings.	Total.	Per mile of railway.	Train mileage.	
		No. of passengers.	Rs.	Mds.	Rs.	Rs.	Rs.	Rs.	No.	Rate. Rs. A. P.
* 22·23	11 days of Jan. ...	31,035	7,209	32,335	1,254	16	8,479	381	1,914	4 6 11
* 22·23	Week ended 18th „ ...	21,540	4,989	13,778	544	9	5,492	247	1,188	4 10 0
* 22·23	„ „ 25th „ ...	22,871	5,508	22,880	839	7	6,352	286	1,188	5 5 7
* 22·23	„ „ 1st Feb. ...	20,360	4,873	20,234	777	3	5,653	254	1,188	4 12 2
* 22·23	„ „ 8th „ ...	20,347	4,911	21,390	808	12	5,731	258	1,188	4 13 2
* 22·23	„ „ 15th „ ...	20,453	4,869	19,765	807	5	5,681	256	1,188	4 12 6
* 22·23	„ „ 22nd „ ...	27,757	5,789	24,419	874	10	7,673	345	1,188	6 7 4
* 22·23	„ „ 1st March	25,217	5,980	25,912	911	9	6,900	311	1,188	5 18 1
* 22·23	„ „ 8th „ ...	35,938	9,731	25,488	938	6	10,675	480	1,224	8 10 8
* 22·23	„ „ 15th „ ...	28,282	6,847	20,737	887	14	7,748	349	1,208	5 15 6
* 22·23	„ „ 22nd „ ...	24,519	6,119	21,144	909	7	7,035	316	1,188	5 14 9
* 22·23	„ „ 29th „ ...	23,183	5,775	20,503	784	7	6,566	295	1,188	5 5 5
* 22·23	„ „ 5th April	26,153	6,632	25,290	765	9	7,406	333	1,188	6 3 7
* 22·23	„ „ 12th „ ...	37,346	11,171	18,948	809	12	11,992	539	1,320	9 1 4
* 22·23	„ „ 19th „ ...	30,141	11,854	14,017	826	10	12,694	571	1,364	9 4 11
* 22·23	„ „ 26th „ ...	21,442	5,845	17,723	814	10	6,709	302	1,188	5 10 4
* 22·23	„ „ 3rd May ...	22,813	5,403	19,816	724	8	6,135	276	1,188	5 2 8
* 22·23	„ „ 10th „ ...	25,311	6,392	14,906	630	8	6,930	312	1,188	5 13 4
22·23	„ „ 17th „ ...	23,036	5,219	14,063	521	8	5,748	259	1,188	4 13 5
22·23	„ „ 24th „ ...	21,878	5,418	12,195	700	8	6,120	275	1,188	5 2 5
22·23	„ „ 31st „ ...	20,494	5,023	15,101	719	9	5,751	259	1,188	4 13 5
22·23	„ „ 7th June ...	20,550	5,459	16,077	615	9	6,081	274	1,188	5 1 11
22·23	„ „ 14th „ ...	22,721	5,460	14,594	569	9	6,028	271	1,188	5 1 2
	Totals up to date ...	581,867	1,47,351	4,52,265	18,022	205	1,65,578	316	28,512	5 12 11

* Audited figures.

Abstract of progressive weekly returns of all earnings for 1902 in comparison with 1901—concluded. *1901.*

		No. of passengers.	Rs.	Mds.	Rs.	Rs.	Rs	Rs	No.	Rate. Rs. A. P.
22·23	12 days of Jan.	33,281	7,800	24,776	1,111	5	8,916	401	2,068	4 5 0
22·23	Week ended 19th „ ..	20,171	4,583	14,418	633	11	5,127	231	1,188	4 5 1
22·23	„ „ 26th „ ..	22,762	5,492	10,236	703	5	6,250	281	1,188	5 4 2
22 23	„ „ 2nd Feb ...	25,458	6,400	15,993	625	4	7,033	316	1,188	5 14 9
22·23	„ „ 9th „ ..	27,779	6,877	23,441	943	6	7,826	353	1,188	6 9 5
22·23	„ „ 16th „ ...	24,473	6,845	23,377	939	6	6,790	305	1,188	5 11 5
22·23	„ „ 23rd „	37,141	9,943	21,131	844	10	10,797	486	1,188	9 1 5
22·23	„ „ 2nd Mar. ...	23,235	5,640	21,865	808	8	6,552	295	1,188	5 8 3
22·23	„ „ 9th „ ...	26,890	6,990	21,897	922	8	7,920	343	1,188	6 6 8
22·23	„ „ 16th „ .	22,638	5,737	21,930	904	11	6,714	302	1,188	5 10 6
22·23	„ „ 23rd „ ...	24,698	6,114	20,435	780	3	6,903	311	1,188	5 13 2
22·23	„ „ 30th „	22,646	5,556	20,319	1,223	9	6,788	305	1,188	5 11 5
22·23	„ „ 6th April .	29,185	7,704	20,838	749	9	8,462	381	1,144	7 6 4
22·23	„ „ 13th „ ...	42,011	12,411	20,484	722	4	13,137	591	1,208	10 1 11
22·23	„ „ 20th „ ..	33,421	9,237	16,037	587	8	10,202	463	1,309	7 0 10
22·23	„ „ 27th „ ..	22,870	5,640	19,058	725	15	6,380	287	1,184	5 5 11
22·23	„ „ 4th May ...	25,693	6,010	16,121	672	7	7,208	328	1,188	6 2 3
22 23	„ „ 11th „ ..	25,340	6,092	18,979	793	6	6,891	310	1,188	5 12 10
22·23	„ „ 18th „ ...	22,838	5,464	15,498	623	12	6,098	274	1,188	5 3 2
22·23	„ „ 25th „ ..	21,123	5,060	18,520	761	15	5,835	262	1,188	4 14 7
22·23	„ „ 1st June ...	27,244	6,817	16,324	703	3	7,523	338	1,188	6 5 4
22·23	„ „ 8th „ ..	26,793	6,143	13,903	573	8	6,724	302	1,232	5 7 4
22·23	„ „ 15th „ ...	21,672	4,861	14,469	611	10	5,512	248	1,188	4 10 3
	Totals up to date ...	609,142	1,52,783	4,45,392	18,503	183	1,71,469	335	28,512	6 0 3

DELHI-UMBALLA-KALKA RAILWAY.

Approximate Return of Traffic for week ended 14th June 1902 on 162·24 miles open.

	Coaching Traffic.		Merchandise and Mineral Traffic.		Other earnings (estimated).	Total earnings.	Traffic Train-miles run.		
	No. of passengers.	Coaching receipts.	Weight carried.	Receipts.			Coaching.	Merchandise.	Total.
		Rs. A. P.	Mds. S.	Rs. A. P.	Rs. A. P.	Rs. A. P.			
Total traffic for the week ...	24 684	20,057 14 0	85,540 20	10,410 5 0	56 0 0	30,524 3 0	8,727	4,078	12,805
Or per mile of railway ...	.....	123 10 1	.....	64 2 8	0 5 6	188 2 3	.....	.....	.....
For previous 22½ weeks of half-year	486,509*	4,23,743 13 0*	31,37,646 20†	2,91,710 14 0†	1,475 0 0‡	7,16,929 11 0	190,046§	102,908§	292,954
Total for 23½ weeks ...	511,193	4,43,801 11 0	32,23,187 0	3,02,121 3 0	1,531 0 0	7,47,453 14 0	198,773	106,986	305,759
COMPARISON.									
Total for corresponding week of previous year.	23,289‡	18,172 13 4	1,33,628 0	16,599 14 0	60 11 6	34,839 6 10	8,134	3,6444	11,778‡
Per mile of railway corresponding week of previous year.	.....	112 0 2	.....	102 5 1	0 6 7	214 11 10	.....	.....	.....
Total for corresponding 23½ weeks of previous year.	450,290	4,12,958 14 1	32,09,434 0	3,40,153 15 6	1,604 2 0	7,54,716 15 7	200,996‡	91,458‡	292,455

* Added No. of passengers 1,300 and Rs. 1,815 } On account of difference between the approximate and audited figures for the week ended 10th
† Deducted Mds. 30,696 and added " 898 } May 1902.
‡ Ditto " 10
§ Audited figures up to 10th May 1902.

1902. *Abstract of progressive weekly returns of all earnings for 1902 in comparison with 1901.*

Open mileage.	Period.	Coaching Traffic.		Merchandise and Mineral Traffic.		Other earnings.	Total.	Per mile of railway.	Train mileage.	
		No. of passengers.	Rs.	Mds.	Rs.	Rs.	Rs.	Rs.	No.	Rate. Rs. A. P.
* 162·24	11 days of Jan. ...	25,067	20,571	1,55,491	16,783	66	39,420	243	18,247	2 2 7
* 162·24	Week ended 18th " ...	16,445	11,690	1,01,583	10,895	65	22,650	140	12,074	1 14 0
* 162·24	" " 25th " ...	18,825	13,956	2,77,622	16,113	48	30,116	186	12,590	2 6 3
* 162·24	" " 1st Feb. ...	19,323	16,896	1,13,114	11,007	70	27,763	171	12,313	2 4 1
* 162·24	" " 8th " ...	18,782	16,526	87,905	10,927	69	27,522	170	12,303	2 4 1
* 162·24	" " 15th " ...	19,477	15,851	2,82,758	15,004	61	30,926	191	12,612	2 7 3
* 162·24	" " 22nd " ...	21,267	17,153	1,93,081	16,088	94	33,333	205	11,997	2 12 5
* 162·24	" " 1st March ...	22,775	18,683	1,71,585	14,391	77	33,151	204	11,751	2 13 3
* 162·24	" " 8th " ...	23,825	19,525	94,365	11,710	95	31,330	193	12,504	2 8 1
* 162·24	" " 15th " ...	22,945	23,093	1,35,806	11,414	82	34,589	213	13,132	2 10 2
* 162·24	" " 22nd " ...	21,916	21,852	1,95,823	15,379	66	37,297	230	14,068	2 8 6
* 162·24	" " 29th " ...	22,083	24,283	1,44,747	16,558	45	40,886	252	15,127	2 11 3
* 162·24	" " 5th April ...	25,317	23,509	2,30,615	12,978	90	36,577	238	14,142	2 11 5
* 162·24	" " 12th " ...	21,024	21,051	1,10,624	12,766	83	33,900	209	13,686	2 7 3
* 162·24	" " 19th " ...	20,155	19,142	1,13,127	17,866	51	31,059	191	13,606	2 4 6
* 162·24	" " 26th " ...	24,072	22,823	1,16,616	13,960	44	36,826	227	14,417	2 8 10
* 162·24	" " 3rd May ...	22,247	21,093	1,12,640	9,385	61	30,539	188	14,034	2 2 10
* 162·24	" " 10th " ...	23,153	19,317	80,960	12,425	59	31,801	196	14,490	2 3 1
162·24	" " 17th " ...	23,202	19,248	1,26,617	13,177	68	32,493	200	12,134	2 10 10
162·24	" " 24th " ...	23,389	18,780	1,29,406	13,467	64	32,311	199	12,180	2 10 5
162·24	" " 31st " ...	25,367	17,940	1,31,333	10,984	63	28,407	175	12,691	2 5 10
162·24	" " 7th June ...	23,873	19,544	1,03,726	12,434	56	32,034	197	12,247	2 9 10
162·24	" " 14th " ...	24,084	20,058	85,541	10,410	56	30,524	188	12,805	2 6 2
	Totals up to date ...	511,193	4,43,802	32,23,187	3,02,121	1,531	7,47,454	195	305,759	2 7 1

* Audited figures.

Abstract of progressive weekly returns of all earnings for 1902 in comparison with 1901—concluded. *1901.*

		No. of passengers.	Rs.	Mds.	Rs.	Rs.	Rs.	Rs.	No.	Rate. Rs. A. P.
162·24	12 days of Jan. ...	20,766	22,477	1,25,206	16,296	65	38,838	239	20,857	1 13 10
162·24	Week ended 19th " ...	15,707	13,931	1,78,507	11,864	41	25,836	159	12,933	2 0 0
162·24	" " 26th " ...	16,332	13,678	1,40,538	11,569	82	25,329	157	12,142	2 1 8
162·24	" " 2nd Feb. ...	18,921	14,083	1,57,744	11,368	71	25,522	157	12,238	2 1 4
162·24	" " 9th " ...	18,754	15,095	83,151	10,131	71	25,307	156	12,167	2 1 2
162·24	" " 16th " ...	19,741	17,279	1,48,693	10,573	73	27,925	172	11,700	2 6 2
162·24	" " 23rd " ...	19,823	18,299	1,26,868	10,975	75	29,349	181	12,295	2 6 2
162·24	" " 2nd March ...	19,304	16,230	1,44,528	13,161	93	29,484	182	11,953	2 7 6
162·24	" " 9th " ...	18,397	16,404	1,06,167	11,901	62	28,367	175	12,102	2 5 6
162·24	" " 16th " ...	23,701	22,944	1,00,333	13,540	104	36,589	221	11,790	3 0 8
162·24	" " 23rd " ...	24,606	22,021	1,17,448	15,301	107	37,729	233	12,518	3 0 3
162·24	" " 30th " ...	21,584	23,171	1,03,513	19,755	66	41,992	259	13,360	3 2 2
162·24	" " 6th April ...	21,385	21,904	1,23,595	18,540	104	40,557	250	13,864	2 14 10
162·24	" " 13th " ...	20,845	19,063	1,41,007	15,785	73	34,920	215	12,968	2 11 1
162·24	" " 20th " ...	17,644	18,547	1,27,665	12,027	54	30,628	189	12,558	2 7 0
162·24	" " 27th " ...	14,557	16,678	1,09,725	14,324	57	31,059	191	12,161	2 8 10
162·24	" " 4th May " ...	17,652	17,358	2,15,145	14,180	51	31,589	195	11,980	2 10 2
162·24	" " 11th " ...	17,473	15,994	1,41,080	16,959	60	33,013	203	11,958	2 12 2
162·24	" " 18th " ...	18,468	18,406	1,05,023	16,809	47	35,262	217	11,067	3 0 4
162·24	" " 25th " ...	20,016	16,851	1,33,131	20,842	73	37,766	233	12,130	3 1 10
162·24	" " 1st June ...	22,520	15,767	1,86,402	18,413	60	34,240	211	12,901	2 10 6
162·24	" " 8th " ...	22,535	20,107	1,41,187	18,932	48	39,087	241	12,445	3 2 3
162·24	" " 15th " ...	23,289	18,173	1,33,628	16,000	67	34,840	215	11,778	2 15 4
	Totals up to date ...	459,290	4,12,959	32,09,434	3,40,154	1,604	7,54,717	190	292,455	2 9 4

SOUTH BEHAR RAILWAY.

Approximate Return of traffic for week ended 14th June 1902 on 79·76 miles open.

	Coaching Traffic.		Merchandise and Mineral Traffic		Other earnings (estimated).	Total earnings.	Traffic Train-miles run.		
	No. of passengers.	Coaching receipts.	Weight carried	Receipts			Coaching.	Merchandise	Total.
		Rs. A. P.	Mds. s.	Rs. A. P.	Rs. A. P.	Rs. A. P.			
Total traffic for the week	13,634	6,555 4 0	51,886 30	2,929 1 0	22 0 0	9,506 5 0	1,930	1,133	3,072
Or per mile of railway	.....	83 3 9	...	37 3 0	0 4 5	120 11 2	.....	.....	.....
For previous 22½ weeks of half-year	312,016*	1,61,312 11 0*	10,92,718 10†	76,565 7 0†	476 0 0‡	2,38,354 3 0	44,457§	21,774§	66,231
Total for 23½ weeks	325,650	1,67,867 15 0	11,44,605 0	79,494 8 0	498 0 0	2,47,860 7 0	46,396	22,907	69,303
COMPARISON									
Total for corresponding week of previous year	14,971	7,116 8 7	29,509 10	2,520 2 0	19 3 3	9,655 13 10	1,945	1,362½	3,307½
Per mile of railway corresponding week of previous year	.....	90 5 8	.....	32 0 0	0 3 11	122 9 7	.....	.....	.....
Total for corresponding 23½ weeks of previous year	314,931½	1,54,960 12 9	12,21 972 10	82,359 13 0	811 14 0	2,38,134 7 9	47,800	30,156½	77,956

* Added number of passengers 1,142 and Rs. 41
† Deducted Mds. 7,498 and ,, 33
‡ Deducted ,, 5
} On account of difference between the approximate and audited figures for the week ended 10th May 1902.
§ Audited figures up to 10th May 1902.

1902. *Abstract of progressive weekly returns of all earnings for 1902 in comparison with 1901.*

Open mileage.	Period.	Coaching Traffic.		Merchandise and Mineral Traffic.		Other earnings.	Total.	Per mile of railway.	Train mileage.	
		No. of passengers.	Rs.	Mds.	Rs.	Rs.	Rs.	Rs.	No.	Rate. Rs. A. P.
*78·76	11 days of Jan. ..	19,440	10,417	57,727	3,647	20	14,084	179	4,567	3 1 4
*78·76	Week ended 18th ,, ...	11,359	5,438	35,368	2,097	19	8,154	104	2,838	2 14 0
*78·76	,, ,, 25th ,, ...	13,943	6,982	36,935	2,895	35	9,880	125	3,835	3 7 0
*78·76	,, ,, 1st Feb. ...	12,845	6,248	33,970	2,175	9	8,432	107	3,150	2 10 10
*78·76	,, ,, 8th ,, ..	13,181	6,716	32,189	2,220	14	8,950	114	3,071	2 14 8
*78·76	,, ,, 15th ,, ...	12,218	6,804	30,604	2,133	16	8,953	114	2,835	3 2 6
*78·76	,, ,, 22nd ,, ...	14,735	8,159	33,706	2,476	21	10,656	135	2,993	3 9 0
*78·76	,, ,, 1st March ...	15,633	9,408	37,721	2,219	21	11,648	148	2,835	4 1 9
*78·76	,, ,, 8th ,, ..	14,472	8,578	50,922	3,579	26	12,183	155	2,678	4 8 9
*78·76	,, ,, 15th ,, ...	14,340	8,140	62,936	5,236	22	13,398	170	2,993	4 7 7
*78·76	,, ,, 22nd ,, ..	10,128	9,611	55,914	4,328	17	13,956	177	2,393	4 10 8
*78·76	,, ,, 29th ,, ..	13,451	8,179	53,316	4,017	26	12,244	155	3,071	3 15 9
*78·76	,, ,, 5th April .	15,590	8,243	71,003	5,026	32	13,341	169	2,993	4 7 4
*78·76	,, ,, 12th ,, ...	15,155	7,531	62,610	4,620	23	12,174	155	2,835	4 4 8
*78·76	,, ,, 19th ,, ...	15,796	7,075	46,931	3,836	15	10,926	139	2,914	3 12 0
*78·76	,, ,, 26th ,, ..	12,271	5,737	35,945	4,012	22	9,771	124	3,071	3 2 11
*78·76	,, ,, 3rd May ..	12,705	5,760	55,752	4,105	21	9,894	126	3,150	3 2 3
*78·76	,, ,, 10th ,, ..	14,402	6,336	48,096	3,623	18	9,997	127	2,993	3 5 5
78·76	,, ,, 17th ,, ...	13,496	5,972	50,734	3,902	24	9,898	123	2,756	3 7 9
78·76	,, ,, 24th ,, ...	14,077	6,803	47,489	3,392	24	10,219	130	2,835	3 9 8
78·76	,, ,, 31st ,, ..	13,794	6,119	57,641	3,610	23	9,752	124	2,993	3 4 2
78·76	,, ,, 7th June ...	13,776	6,981	48,940	3 134	22	10,145	129	2,835	3 9 8
78·76	,, ,, 14th ,, ...	13,634	6,555	51,886	2,929	22	9,506	121	3,072	3 1 6
	Totals up to date .	325,650	1,67,868	11,44,605	79,494	494	2,47,860	134	69,303	3 9 3

* Audited figures.

Abstract of progressive weekly returns of all earnings for 1902 in comparison with 1901—concluded. 1901.

		No. of passengers.	Rs.	Mds.	Rs	Rs.	Rs.	Rs.	No.	Rate. Rs. A. P.
78·76	12 days of Jan. ..	18,079	8,256	69,742	4,250	47	12,563	160	5,586	2 4 9
78·76	Week ended 19th ,, ...	11,073	5,045	49,632	3,028	20	8,091	103	3,228	2 8 1
78·76	,, ,, 26th ,, ...	12,076	6,095	46,172	2,802	41	8,998	144	3,150	2 13 8
78·76	,, ,, 2nd Feb. ...	14,872	7,292	48,810	2,789	23	10,104	128	3,229	3 2 1
78·76	,, ,, 9th ,, ...	14,755	8,170	45,680	2,641	63	10,874	138	3,308	3 4 7
78·76	,, ,, 16th ,, ...	15,629	8,451	51,737	3,670	50	12,180	155	3,228	3 12 4
78·76	,, ,, 23rd ,, ...	15,705	8,225	63,445	4,120	36	12,381	157	3,386	3 10 6
78·76	,, ,, 2nd March .	16,528	7,947	54,790	3,240	46	11,233	143	2,835	3 15 5
78·76	,, ,, 9th ,, ...	14,406	7,522	40,820	2,669	46	10,237	130	3,309	3 1 6
78·76	,, ,, 16th ,, ...	15,731	8,770	48,067	3,702	50	12,522	159	3,229	3 14 1
78·76	,, ,, 23rd ,, ...	13,829	8,173	65,991	4,672	51	12,896	163	3,465	3 11 3
78·76	,, ,, 30th ,, ...	12,722	6,489	59,729	4,634	31	11,124	141	3,307	3 5 10
78·76	,, ,, 6th April ...	11,701	5,804	52,237	3,541	41	9,386	119	3,308	2 13 5
78·76	,, ,, 13th ,, ...	13,588	6,177	47,302	2,853	33	9,163	116	3,307	2 12 4
78·76	,, ,, 20 h ,, ..	11,989	5 363	43,964	3,181	39	8,583	109	3,308	2 9 6
78·76	,, ,, 27th ,, ..	11,128	5,224	50,796	3,597	28	8,849	112	3,307	2 10 10
78·76	,, ,, 4th May ...	9,572	4,161	48,733	3,476	27	7,664	97	3,308	2 5 3
78·76	,, ,, 11th ,, .	12,575	6,249	56,998	4,314	17	10,570	134	3,317	3 3 1
78·76	,, ,, 18th ,, ...	11,917	5,673	71,008	4,939	21	10,628	135	3,309	3 3 5
78·76	,, ,, 25th ,, ...	13,442	6,274	67,254	4,558	28	10,855	138	3,544	3 1 0
78·76	,, ,, 1st June ...	12,782	5,562	65,972	3 867	28	9,157	116	3,386	2 11 3
78·76	,, ,, 8th ,, ..	15,172	6,947	52,815	3,519	23	10,489	133	3,387	3 2 9
78·76	,, ,, 15th ,,	14,971	7,117	29,569	2,520	19	9,656	123	3,308	2 14 8
	Totals up to date ...	314,932	1 54,961	12,21,973	82,359	814	2,38,133	128	77,957	3 0 10

BENGAL CENTRAL RAILWAY COMPANY, LIMITED.

Approximate Return of Traffic and Mileage for the week ended 14th June 1902 on 139 miles open.

	Coaching Traffic.		Merchandise and Mineral Traffic.		Other earnings.	Total earnings.	Traffic Train-miles run.		
	Number of passengers.	Coaching receipts.	Weight carried.	Receipts.			Coaching.	Merchandise.	Total.
		Rs. A. P.	Mds. S.	Rs. A. P.	Rs. A. P.	Rs. A. P.			
Total traffic for the week ...	40,137	18,686 0 0	56,905 0	4,323 0 0	110 0 0	23,118 0 0	8,535	2,482	6,017
Or per mile of railway	309	144 0 0†	403 0	31 0 0	1 0 0	176 0 0	.....	.....	.....
For previous 23 weeks of half-year*	526,022	3,27,440 0 0	13,90,882 0	1,10,116 0 0	90,152 0 0	5,27,708 0 0	75,909	56,799	135,708
Total for 24 weeks ...	866,159	3,46,126 0 0	14,46,887 0	1,14,438 0 0	90,262 0 0	5,50,826 0 0	82,444	59,281	141,725
Comparison.									
Total for corresponding week of previous year	36,976	14,025 0 0	46,536 0	4,196 0 0	206 0 0	18,427 0 0	3,918	2,112	5,830
Per mile of railway corresponding week of previous year ..	284	108 0 0	358 0	30 0 0	1 0 0	139 0 0	.....	.....	.....
Total to corresponding date of previous year	887,782	3,56,231 0 0	13,79,511 0	1,00,722 0 0	1,23,286 0 0	5,80,239 0 0	90,097	52,938	152,035

* Audited up to week ending 19th April 1902.
† Coaching traffic calculated on 130 miles only.

ASSAM-BENGAL RAILWAY.

Approximate Return of Traffic for the week ended 14th June 1902 on 558 miles open for all descriptions of traffic and an additional 31 miles for goods and parcels traffic only.

	Coaching Traffic.		Merchandise and Mineral Traffic.		Other earnings	Total earnings.	Traffic Train-miles run.		
	No. of passengers.	Coaching receipts.	Weight carried.	Receipts.			Coaching.	Merchandise.	Total.
		Rs. A. P.	Mds. S.	Rs. A. P.	Rs. A. P.	Rs. A. P.			
Total traffic for the week ...	33,803	19,589 0 0	1,03,764 0	14,962 0 0	2,028 0 0	36,559 0 0	6,794	5,527	12,321
Or per mile of railway	60·58	35·07	176·17	25·40	3·44	63·91	12·18	9·38	21·56
For previous 23 weeks of half-year	859,461	5,42,570 0 0	24,07,304 0	2,82,226 0 0	31,358 0 0	8,56,054 0 0	153,872	131,770	285,642
Total for 24 weeks ...	893,264	5,62,159 0 0	25,11,068 0	2,97,188 0 0	33,386 0 0	8,92,613 0 0	160,666	137,297	297,963
Comparison.									
Total for corresponding week of previous year	34,372	22,736 0 0	1,47,899 0	23,453 0 0	2,255 0 0	47,446 0 0	5,986	8,397	14,383
Per mile of railway corresponding week of previous year	61·60	40·75	265·05	38·85	3·90	83·50	10·73	14·53	25·26
Total to corresponding date of previous year	895,571	5,85,080 0 0	28,12,497 0	3,73,370 0 0	70,635 0 0	10,29,085 0 0	120,920	165,540	286,460

FINANCIAL YEAR.

Approximate Statement of Gross Receipts of the Assam-Bengal Railway.

Receipts for the week ending 14th June 1902.			Receipts for the week ending 15th June 1901.			Total receipts from 1st April 1902 to 14th June 1902.			Total receipts from 1st April 1901 to 15th June 1901.			Total increase in 1902.	Total decrease in 1902.
Mean mileage worked.	Receipts.	Per mile worked.	Mean mileage worked.	Receipts.	Per mile worked.	Mean mileage worked.	Total receipts.	Per mile worked per week.	Mean mileage worked	Total receipts.	Per mile worked per week.		
	Rs.	Rs.		Rs.	Rs.		Rs.			Rs.		Rs.	
589	36,559	63·01	578	47,446	83·50	589	3,64,905	...	578	4,60,807	...	.....	95,902

EASTERN BENGAL STATE RAILWAY.

(INCLUDING N. B., K.-D., DACCA, AND ASSAM-BEHAR SECTIONS.)

Approximate Return of Traffic and Mileage for the week ended 14th June 1902 on 854 miles open.

	Coaching Traffic.		Merchandise and Mineral Traffic.		Other earnings (including ferry).	Total earnings.	Traffic Train-miles run.		
	No. of passengers.	Coaching receipts.	Weight carried.	Receipts.			Coaching.	Merchandise.	Total.
		Rs. A. P.	Mds. S.	Rs. A. P.	Rs. A. P.	Rs. A. P.			
Total traffic for the week ...	243,400	1,17,480 0 0	7,96,380 0	1,24,130 0 0	6,460 0 0	2,48,070 0 0	39,400	36,180	75,580
Or per mile of railway	285	138 0 0	933 0	145 0 0	1 0 0*	284 0 0*	...	...	...
For previous 23 weeks of half-year†	5,396,688	25,71,936 0 0	2,75,94,988 0	37,71,243 0 0	4,63,685 0 0	68,06,864 0 0	849,951	967,752	1,817,703
Total for 24 weeks ...	5,640,088	26,89,416 0 0	2,83,91,368 0	38,95,373 0 0	4,70,145 0 0	70,54,934 0 0	889,351	1,003,932	1,893,283
COMPARISON.									
Total for corresponding week of previous year	236,224	1,04,031 0 0	5,65,524 0	1,01,633 0 0	7,588 0 0	2,13,252 0 0	36,890	35,431	72,321
Per mile of railway corresponding week of previous year ...	255	122 0 0	663 0	119 0 0	1 0 0	242 0 0	...	...	...
Total to corresponding date of previous year	5,633,397	27,31,036 0 0	2,81,16,666 0	32,90,039 0 0	7,57,827 0 0	67,78,954 0 0	862,901	881,506	1,744,407

* Excluding ferry earnings.
† Audited up to week ending 12th April 1902.
Increase under coaching traffic is due to Dashara festival.
Increase under goods traffic is due to jute and tea traffic.

BRAHMAPUTRA-SULTANPUR RAILWAY.

Approximate Return of Traffic and Mileage for the week ended 14th June 1902 on 59·19 miles open.

	Coaching Traffic.		Merchandise and Mineral Traffic.		Other earnings (including ferry).	Total earnings.	Traffic Train-miles run.		
	No. of passengers.	Coaching receipts.	Weight carried.	Receipts.			Coaching.	Merchandise.	Total.
		Rs. A. P.	Mds. S.	Rs. A. P.	Rs. A. P.	Rs. A. P.			
Total traffic for the week ...	7,470	2,550 0 0	7,030 0	660 0 0	80 0 0	3,230 0 0	1,080	1,104	2,184
Or per mile of railway	126	43 0 0	119 0	10 0 0	2 0 0	55 0 0	.....	.....	...
For previous 23 weeks of half-year*	163,185	59,206 0 0	4,87,774 0	34,305 0 0	765 0 0	94,276 0 0	23,344	19,981	42,821
Total for 24 weeks ...	170,655	61,756 0 0	4,94,804 0	34,965 0 0	845 0 0	97,506 0 0	24,424	20,385	44,809
COMPARISON.									
Total for corresponding week of previous year	6,176	1,770 0 0	10,406 0	943 0 0	11 0 0	2,723 0 0	985	1,408	2,393
Per mile of railway corresponding week of previous year ...	105	30 0 0	176 0	16 0 0	.....	46 0 0	.....	.....	...
Total to corresponding date of previous year	148,052	48,471 0 0	4,56,460 0	35,825 0 0	529 0 0	73,825 0 0	21,401	25,047	46,448

* Audited up to week ending 12th April 1902.

MYMENSINGH-JAGANNATHGANJ RAILWAY.

Approximate Return of Traffic and Mileage for the week ended 14th June 1902 on 53·37 miles open.

	Coaching Traffic.		Merchandise and Mineral Traffic.		Other earnings (including ferry).	Total earnings.	Traffic Train-miles run.		
	No. of passengers.	Coaching receipts.	Weight carried.	Receipts.			Coaching.	Merchandise.	Total.
		Rs A. P.	Mds. S.	Rs. A P	Rs. A. P.	Rs A P.			
Total traffic for the week ...	3,280	2,300 0 0	11,190 0	500 0 0	10 0 0	2,960 0 0	800	1,350	2,150
Or per mile of railway	155	45 0 0	210 0	10 0 0	.....	55 0 0	.....	.....	.....
For previous 23 weeks of half-year*	206,553	58,194 0 0	4,84,025 0	22,774 0 0	401 0 0	81,369 0 0	21,014	20,935	41,949
Total for 24 weeks ...	214,512	60,584 0 0	4,75,215 0	23,334 0 0	411 0 0	84,329 0 0	21,904	22,195	44,099
COMPARISON.									
Total for corresponding week of previous year	7,718	2,016 0 0	5,386 0	294 0 0	17 0 0	2,327 0 0	1,283	1,661	2,944
Per mile of railway corresponding week of previous year ...	146	38 0 0	101 0	6 0 0	.....	44 0 0	.....	.....	.....
Total to corresponding date of previous year	223,000	56,934 0 0	2,98,110 0	13,380 0 0	437 0 0	73,741 0 0	23,795	12,441	41,236

* Audited up to week ending 12th April 1902.

DACCA STATE RAILWAY.

Approximate Return of Traffic and Mileage for the week ended 14th June 1902 on 86 miles open.

	Coaching Traffic		Merchandise and Mineral Traffic.		Other earnings.	Total earnings.	Traffic Train-miles run.		
	No. of passengers.	Coaching receipts.	Weight carried.	Receipts.			Coaching	Merchandise.	Total.
		Rs. A. P.	Mds. s.	Rs. A. P.	Rs. A. P.	Rs. A. P.			
Total traffic for the week ...	26,720	7,520 0 0	11,240 0	1,300 0 0	70 0 0	8,690 0 0	3,100	1,400	4,500
Or per mile of railway	311	87 0 0	132 0	15 0 0	1 0 0	103 0 0	.		...
For previous 23 weeks of half-year*	620,815	1,83,201 0 0	11,90,563 0	1,08,694 0 0	5,755 0 0	2,97,650 0 0	63,459	48,251	111,710
Total for 24 weeks ...	647,535	1,90,721 0 0	12,01,933 0	1,09,994 0 0	5,825 0 0	3,06,340 0 0	66,559	49,651	116,210
Comparison.									
Total for corresponding week of previous year	24,633	7,100 0 0	14,828 0	1,861 0 0	80 0 0	9,041 0 0	2,784	1,524	4,308
Per mile of railway corresponding week of previous year ...	286	82 0 0	172 0	22 0 0	1 0 0	105 0 0	.		...
Total to corresponding date of previous year	643,836	1,94,022 0 0	10,32,286 0	99,061 0 0	3,972 0 0	3,02,055 0 0	66,906	49,656	116,564

* Audited up to week ending 12th April 1902.

COOCH BEHAR STATE RAILWAY.

Approximate Return of Traffic and Mileage for the week ended 14th June 1902 on 33·78 miles open.

	Coaching Traffic.		Merchandise and Mineral Traffic.		Other earnings (including ferry).	Total earnings.	Traffic Train-miles run.		
	No. of passengers.	Coaching receipts.	Weight carried.	Receipts.			Coaching.	Merchandise.	Total.
		Rs. A. P.	Mds. s.	Rs. A. P.	Rs. A. P.	Rs. A. P.			
Total traffic for the week	3,230	1,210 0 0	5,870 0	710 0 0	20 0 0	1,940 0 0	320	2,260*	2,580*
Or per mile of railway ...	96	35 0 0	174 0	21 0 0	1 0 0	57 0 0	...	...	...
For previous 23 weeks of half-year†	66,285	25,134 0 0	3,07,858 0	21,079 0 0	1,368 0 0	47,481 0 0	7,564	37,720	45,284
Total for 24 weeks ...	69,515	26,344 0 0	3,13,728 0	21,789 0 0	1,388 0 0	49,421 0 0	7,884	39,980	47,864
Comparison.									
Total for corresponding week of previous year	2,383	837 0 0	5,422 0	734 0 0	140 0 0	1,711 0 0	298	248	546
Per mile of railway corresponding week of previous year	71	25 0 0	161 0	22 0 0	...	47 0 0	...	...	...
Total to corresponding date of previous year	50,311	19,175 0 0	2,75,743 0	24,187 0 0	4,287 0 0	47,649 0 0	5,603	38,489	44,092

* Including ballast train-miles, 1,960.
† Audited up to week ending 12th April 1902.

BENGAL AND NORTH-WESTERN RAILWAY.

Approximate Return of Traffic for the week ending 14th June 1902 on 1,262 miles open

	Coaching Traffic.		Merchandise and Mineral Traffic		Other earnings (estimated), including steam-boat.	Total earnings.	Traffic Train-miles run.		
	No. of passengers.	Receipts.	Weight carried.	Receipts			Coaching.	Merchandise.	Total.
		Rs.	Mds.	Rs.	Rs	Rs.			
Total traffic for the week on 1,262 miles open	217,440	91,830	7,14,630	(a)96,340	12,630	2,07,800	39,668	(b)38,817	78,475
Or per mile of railway	172·30	72·77	566·27	76·34	10·55	164·66	...	...	...
For previous 22½ weeks of half-year (c)	4,289,685	18,64,808	1,97,51,578	27,44,747	4,79,309	50,88,764	924,430	838,810	1,763 240
Total for 23½ weeks ...	4,507,125	19,56,638	2,04,66,208	28,41,087	4,98,830	52,96,564	964,098	877,627	1,841,715
Comparison.									
Total for corresponding week of previous year on 1,251 miles open	250,028	94,154	8,23,150	1,19,465	18,091	2,31,710	32,233	(d)43,170	75 403
Per mile of railway corresponding week of previous year ...	200 58	75 27	657·99	95·49	14·46	185·23	...	...	...
Total to corresponding date of previous year	4,873,803	17,57,532	1,75,13,799	27,23,237	4,86,294	49,67,563	735,535	827,615	1,563 150

(a) Decrease resulted principally from a falling off in the local traffic.
(b) Includes 2,602 miles of ballast trains run on open line.
(c) ,, audited figures up to week ending 12th April 1902.
(d) ,, 8,000 miles of ballast trains run on open line.

EASTERN BENGAL STATE RAILWAY.

(INCLUDING N. B., K.-D., DACCA AND ASSAM-BEHAR SECTIONS.)

Approximate Return of Traffic and Mileage for the week ended 21st June 1902 on 854 miles open.

	COACHING TRAFFIC.		MERCHANDISE AND MINERAL TRAFFIC.		Other earnings (including ferry).	Total earnings.	TRAFFIC TRAIN-MILES RUN.		
	Number of passengers.	Coaching receipts.	Weight carried.	Receipts.			Coaching.	Merchandise.	Total.
		Rs. A. P.	Mds. s.	Rs. A. P.	Rs. A. P.	Rs. A. P.			
Total traffic for the week ...	248,810	1,14,590 0 0	7,81,910 0	1,20,760 0 0	6,410 0 0	2,41,760 0 0	37,714	31,588	69 302
Or per mile of railway ...	291	134 0 0	916 0	141 0 0	1 0 0*	276 0 0*	...	...	...
For previous 24 weeks of half-year†	5,554,126	27,02,300 0 0	2,69,11,074 0	39,06,320 0 0	4,80,432 0 0	70,89,052 0 0	889,967	1,001,100	1,891,057
Total for 25 weeks ...	5,802,936	28,16,890 0 0	2,76,93,554 0	40,27,080 0 0	4,86,842 0 0	73,30,812 0 0	927,671	1,032,688	1,960,359
COMPARISON.									
Total for corresponding week of previous year	250,164	1,03,292 0 0	7,49,310 0	99,148 0 0	8,020 0 0	2,11,360 0 0	36,414	33,903	70,347
Per mile of railway corresponding week of previous year ...	293	121 0 0	878 0	116 0 0	2 0 0	239 0 0	...	...	...
Total to corresponding date of previous year	5,883,551	28,34,319 0 0	2,28,75,976 0	33,89,247 0 0	7,06,747 0 0	69,90,313 0 0	897,345	914,409	1,813,754

* Excluding ferry earnings.
† Audited up to week ending 26th April 1902.
Increase under coaching traffic is due to *Dashara* bathing festival.
Ditto goods traffic is due to jute and tea traffic.

BRAHMAPUTRA-SULTANPUR RAILWAY.

Approximate Return of Traffic and Mileage for the week ended 21st June 1902 on 59·19 miles open.

	COACHING TRAFFIC.		MERCHANDISE AND MINERAL TRAFFIC.		Other earnings (including ferry).	Total earnings.	TRAFFIC TRAIN-MILES RUN.		
	No. of passengers.	Coaching receipts.	Weight carried.	Receipts.			Coaching.	Merchandise.	Total.
		Rs. A. P.	Mds. s.	Rs. A. P.	Rs. A. P.	Rs. A. P.			
Total traffic for the week ...	7,030	2,310 0 0	7,640 0	670 0 0	50 0 0	2,930 0 0	1,072	1,280	2,352
Or per mile of railway	119	37 0 0	129 0	11 0 0	1 0 0	49 0 0	...	...	...
For previous 24 weeks of half-year*	169,712	58,672 0 0	513,803 0	35,882 0 0	821 0 0	95,375 0 0	24,439	20,370	44,809
Total for 25 weeks ...	176,742	60,982 0 0	521,443 0	36,552 0 0	871 0 0	98,305 0 0	25,511	21,650	47,161
COMPARISON.									
Total for corresponding week of previous year	5,559	1,602 0 0	11,688 0	927 0 0	12 0 0	2,541 0 0	915	1,268	2,183
Per mile of railway corresponding week of previous year	94	27 0 0	198 0	16 0 0	...	43 0 0	...	...	...
Total to corresponding date of previous year	153,611	44,073 0 0	468,148 0	36,752 0 0	541 0 0	81,366 0 0	22,316	26,315	48,631

* Audited up to week ending 26th April 1902.

MYMENSINGH-JAGANNATHGANJ RAILWAY.

Approximate Return of Traffic and Mileage for the week ended 21st June 1902 on 53·37 miles open.

	COACHING TRAFFIC.		MERCHANDISE AND MINERAL TRAFFIC.		Other earnings (including ferry).	Total earnings.	TRAFFIC TRAIN-MILES RUN.		
	Number of passengers.	Coaching receipts.	Weight carried.	Receipts.			Coaching.	Merchandise.	Total.
		Rs. A. P.	Mds. s.	Rs. A. P.	Rs. A. P.	Rs. A. P.			
Total traffic for the week ...	7,950	2,600 0 0	8,060 0	370 8 0	10 0 0	3,040 0 0	890	1,287	2,177
Or per mile of railway ...	149	50 0 0	151 0	7 0 0	.....	57 0 0	...	...	...
For previous 24 weeks of half-year*	217,277	61,399 0 0	481,018 0	23,300 0 0	415 0 0	85,114 0 0	21,964	22,659	44,623
Total for 25 weeks ...	225,227	64,059 0 0	489,078 0	23,670 0 0	425 0 0	88,154 0 0	22,854	23,946	46,800
COMPARISON.									
Total for corresponding week of previous year	7,555	1,969 0 0	6,292 0	327 0 0	8 0 0	2,294 0 0	1,208	1,533	2,741
Per mile of railway corresponding week of previous year ...	142	37 0 0	118 0	6 0 0	...	43 0 0	...	...	...
Total to corresponding date of previous year	230,045	60,893 0 0	304,402 0	18,707 0 0	483 0 0	75,085 0 0	30,003	13,974	43,977

* Audited up to week ending 26th April 1902.

DACCA STATE RAILWAY.

Approximate Return of Traffic and Mileage for the week ended 21st June 1902 on 86 miles open.

	Coaching Traffic.		Merchandise and Mineral Traffic.		Other earnings.	Total earnings.	Traffic Train-miles run.		
	Number of passengers.	Coaching receipts.	Weight carried.	Receipts.			Coaching.	Merchandise.	Total.
		Rs. A. P.	Mds. s.	Rs. A. P.	Rs. A. P.	Rs. A. P.			
Total traffic for the week ...	21,120	7,060 0 0	11,600 0	1,170 0 0	100 0 0	8,330 0 0	2,038	1,690	4,308
Or per mile of railway	246	82 0 0	135 0	14 0 0	1 0 0	97 0 0	...	...	..
For previous 24 weeks of half-year*	650,406	1,91,075 0 0	12,99,100 0	1,11,118 0 0	6,915 0 0	3,09,103 0 0	66,550	49,651	116,210
Total for 25 weeks ...	671,526	1,98,135 0 0	13,10,700 0	1,12,283 0 0	7,015 0 0	3,17,433 0 0	69,187	51,331	120,518
Comparison.									
Total for corresponding week of previous year	22,968	6,400 0 0	16,050 0	1,801 0 0	42 0 0	8,393 0 0	2,754	1,675	4,459
Per mile of railway corresponding week of previous year ...	267	75 0 0	187 0	22 0 0	1 0 0	98 0 0	...	..	...
Total to corresponding date of previous year	666,804	2,00,482 0 0	10,48,836 0	1,00,952 0 0	9,014 0 0	3,10,448 0 0	66,692	51,331	121,023

* Audited up to week ending 26th April 1902.

COOCH BEHAR STATE RAILWAY.

Approximate Return of Traffic and Mileage for the week ended 21st June 1902 on 33·78 miles open.

	Coaching Traffic.		Merchandise and Mineral Traffic.		Other earnings (including ferry).	Total earnings.	Traffic train-miles run.		
	Number of passengers.	Coaching receipts.	Weight carried.	Receipts.			Coaching.	Merchandise.	Total.
		Rs. A. P.	Mds. s.	Rs. A. P.	Rs. A. P.	Rs. A. P.			
Total traffic for the week	2,970	990 0 0	7,040 0	700 0 0	10 0 0	1,700 0 0	320	2,101*	2,421*
Or per mile of railway	88	29 0 0	208 0	23 0 0	.....	52 0 0	.....	.....	.....
For previous 24 weeks of half-year†	68,983	26,418 0 0	3,22,599 0	21,855 0 0	1,215 0 0	49,488 0 0	7,992	39,770	47,762
Total for 25 weeks ...	71,953	27,408 0 0	3,29,639 0	22,615 0 0	1,225 0 0	51,248 0 0	8,312	41,871	50,183
Comparison.									
Total for corresponding week of previous year	1,976	747 0 0	7,138 0	1,051 0 0	144 0 0	1,942 0 0	205	251	546
Per mile of railway corresponding week of previous year	58	22 0 0	211 0	31 0 0	.....	53 0 0	.....	.....	.....
Total to corresponding date of previous year	52,287	19,922 0 0	2,62,831 0	25,238 0 0	4,431 0 0	40,591 0 0	5,898	38,740	44,038

* Including ballast train-miles 1,945.
† Audited up to week ending 26th April 1902.

BENGAL AND NORTH-WESTERN RAILWAY.

Approximate Return of Traffic for the week ending 21st June 1902 on 1,262 miles open.

	Coaching Traffic.		Merchandise and Mineral Traffic.		Other earnings (estimated), including steam-boat.	Total earnings.	Traffic Train-miles run.		
	No. of passengers.	Receipts.	Weight carried.	Receipts.			Coaching.	Merchandise.	Total.
		Rs.	Mds.	Rs	Rs.	Rs.			
Total traffic for the week on 1,262 miles open	221,510	(a) 98,410	6,72,240	(b) 88,070	19,410	(a) 2,06,490	39,987	(c) 34,243	74,230
Or per mile of railway ...	175·52	77·98	532 63	70·26	15·38	163·62	.....	.....	.....
For previous 23½ weeks of half-year(d)	4,509,202	19,70,341	2,05,64,028	23,57,115	5,19,585	53,47,039	965,218	879,067	1,844,285
Total for 24½ weeks ...	4,730,712	20,68,751	2,12,36,268	23,45,763	5,38,995	55,53,529	1,005,205	913,310	1,918,515
Comparison.									
Total for corresponding week of previous year on 1,251 miles open	212,090	80,595	7,76,241	94,781	19,573	1,94,949	31,040	(e) 37,150	68,190
Per mile of railway corresponding week of previous year ...	169·54	64·42	588·52	75·77	15·64	155·83	.....	...	.....
Total to corresponding date of previous year	4,590,895	18,38,118	2,03,50,031	28,18,018	5,05,866	51,62,002	788,575	891,765	1,631,340

(a) Increase due to increased mileage and improved traffic generally.
(b) Decrease due to a falling off of Rs. 7,000 in local traffic.
(c) Includes 3,142 miles of ballast trains run on open line.
(d) ,, audited figures up to week ending 3rd May 1902.
(e) ,, 2,518 miles of ballast trains run on open line.

SEGOWLIE-RAKSAUL BRANCH RAILWAY.

(WORKED BY THE B. & N.-W. RAILWAY.)

Approximate Return of Traffic for the week ending 21st June 1902 on 18 miles open.

	Coaching Traffic.		Merchandise and Mineral Traffic.		Other earnings (estimated).	Total earnings.	Traffic Train-miles run.		
	Passengers carried.	Receipts.	Weight carried.	Receipts.			Coaching.	Merchandise.	Total.
	No.	Rs.	Mds.	Rs.	Rs.	Rs.			
Total traffic for the week on 18 miles open	1,716	261	14,888	506	12	779	336	168	504
Or per mile of railway	95·33	14·50	827·11	28·11	0·67	43·28	.....	.....	.....
For previous 23½ weeks of half-year*	56,858	9,658	2,98,409	7,716	856	18,230	8,795	3,121	11,916
Total for 24½ weeks ...	58,574	9,919	3,08,297	8,222	868	19,009	9,131	3,289	12,420
COMPARISON.									
Total for corresponding week of previous year on 18 miles open.	1,886	301	13,348	385	5	691	353	151	504
Per mile of railway corresponding week of previous year.	104·78	16·72	741·56	21·41	0·27	38·40	.....	.....	.....
Total to corresponding date of previous year.	50,772	8,463	3,48,972	9,879	773	19,115	8,928	3,069	11,997

* Includes audited figures up to week ending 3rd May 1902.

SEGOWLIE-RAKSAUL BRANCH RAILWAY.

(WORKED BY THE B. & N.-W. RAILWAY.)

Audited Return of Traffic for week ending 26th April 1902 on 18 miles open.

	Coaching Traffic.		Merchandise and Mineral Traffic.		Other earnings.	Total earnings.	Traffic Train-miles run.		
	Passengers carried.	Receipts.	Weight carried.	Receipts.			Coaching.	Merchandise.	Total.
	No.	Rs. A. P.	Mds.	Rs. A. P.	Rs. A. P.	Rs. A. P.			
[illegible] traffic for the week on 18 miles open	2,492	370 11 3	14,115	320 9 0	512 3 0	1,203 7 3	344	160	504
[illegible] per mile of railway	138·44	20 9 6	784·17	17 12 11	28 7 4	66 13 9	.....	.....	.....
[illegible] previous 16½ weeks of half-year	41,683	7,362 7 0	1,78,381	4,631 15 5	253 6 0	12,247 12 5	5,907	1,977	7,884
Total for 16½ weeks ...	44,175	7,733 2 3	1,92,496	4,952 8 5	765 9 0	13,451 3 8	6,251	2,137	8,388
COMPARISON.									
Total for corresponding week of previous year on 18 miles open	1,813	296 0 6	15,359	530 0 0	9 14 0	835 14 6	374	139	513
Per mile of railway corresponding week of previous year	100·72	16 7 2	853·28	29 7 1	0 8 9	46 7 0	.....	.....	.....
Total to corresponding date of previous year	34,446	5,776 9 11	2,06,715	6,143 3 8	611 7 0	13,531 4 7	6,019	1,946	7,965

SEGOWLIE-RAKSAUL BRANCH RAILWAY.

(WORKED BY THE B. & N.-W. RAILWAY.)

Audited Return of Traffic for week ending 3rd May 1902 on 18 miles open.

	Coaching Traffic.		Merchandise and Mineral Traffic.		Other earnings.	Total earnings.	Traffic Train-miles run.		
	Passengers carried.	Receipts.	Weight carried.	Receipts.			Coaching.	Merchandise.	Total.
	No.	Rs. A. P.	Mds.	Rs. A. P.	Rs. A. P.	Rs. A. P.			
Total traffic for the week on 18 miles open	2,549	378 4 9	13,153	350 12 0	13 9 0	742 9 9	392	112	504
Or per mile of railway	141 61	21 0 3	730·72	19 7 9	0 12 1	41 4 1	.....	.....	.....
For previous 16½ weeks of half-year	44,175	7,733 2 3	192,496	4,952 8 5	765 0 0	13,451 3 8	6,251	2,137	8,388
Total for 17½ weeks ...	46,724	8,111 7 0	205,649	5,303 4 5	779 2 0	14,193 13 5	6,643	2,249	8,892
COMPARISON.									
Total for corresponding week of previous year on 18 miles open	1,710	366 14 4	12,676	490 0 0	4 5 0	861 3 4	398	106	504
Per mile of railway corresponding week of previous year ...	95·00	20 6 1	704·22	27 3 7	0 3 10	47 13 6	.....	.....	.....
Total to corresponding date of previous year	30,156	6,143 8 3	210,301	6,633 3 8	615 12 0	13,392 7 11	6,417	2,052	48,469

DARJEELING-HIMALAYAN RAILWAY COMPANY, LIMITED.

		Rs.	A.	P.	Rs.	A.	P.
Approximate earnings for the week ending 21st June 1902 ...	Coaching ...	7,643	0	0			
	Goods ...	9,570	0	0	17,172	0	0
	Other earnings ...	59	0	0			
Audited earnings for the corresponding period of 1901 ...	Coaching ...	7,148	0	0			
	Goods ...	9,521	0	0	17,056	0	0
	Other earnings ...	387	0	0			
	Increase ...				116	0	0
Receipts per mile for the week ending 21st June 1902					336	11	4
Ditto for the corresponding period of 1901					334	6	11
	Increase ...				2	4	5
Receipts from 1st January to 21st June 1902					3,72,363	0	0
Ditto for the corresponding period of 1901					3,56,442	0	0
	Increase ...				15,921	0	0

Printed at the Printing Office, and published by the Book Depôt, of the Bengal Secretariat, Writers' Buildings, in the City of Calcutta, on 2nd July 1902.

REGISTERED No. 0209.]

No. 28 of 1902.

The Calcutta Gazette.

WEDNESDAY, JULY 9, 1902.

CONTENTS.

	Page
PART I.—Orders and Notifications by the Lieutenant-Governor of Bengal, the High Court, Government Treasury, &c.	965—997
PART IA.—Orders and Notifications by the Government of India	115—116
PART IB.—Orders by the Lieutenant-Governor of Bengal	137—138
PART II.—Advertisements	861—880
PART III.—Acts of the Bengal Council	Nil
PART IV.—Bills of the Bengal Council	Nil
PART IVA.—Proceedings of the Bengal Legislative Council	Nil
PART V.—Acts of the Governor-General's Council assented to by the Governor-General :—	
An Act to amend the Indian Paper Currency Act, 1900 ...	27
(*Not issued with this copy of Gazette.*)	
PART VI.—Bills introduced into the Council of the Governor-General for making Laws and Regulations or published under Rule 23	Nil
APPENDIX.—Marine Notifications	253—263
SUPPLEMENT No. 28:—	
Redistribution of the scale of tonnage allotted to the various grades of the Bengal Pilot Service	977
First Forecast of the Jute Crop in Bengal for the Season 1902	979
Statistical Return of Crops, Prices current, Irrigation Operation, Major and Minor Works, Abstract and Results of Meteorological Observations, Circular and Eastern Canal, Railway Traffic Receipts, &c., &c.	986—1016

PART I.

Orders and Notifications by the Lieutenant-Governor of Bengal, the High Court, Government Treasury, &c.

ORDERS BY THE LIEUT.-GOVERNOR OF BENGAL.

No. 3037A.

APPOINTMENTS AND TRANSFERS.

GENERAL.—*No. 1603A.D.—The 1st July 1902.*—Mr. A. P. Muddiman, Officiating Joint-Magistrate and Deputy Collector, Gopalganj, Saran, is transferred to the head-quarters station of the 24-Parganas district.

Saran.
24-Parganas.

No. 1605A.D.—The 1st July 1902.—Mr. T. S. Macpherson, Assistant Magistrate and Collector, on leave, is appointed to have charge of the Gopalganj subdivision of the Saran district.

Saran.

No. 1762A.D.—The 4th July 1902.—Mr. W. S. Milne, Assistant Magistrate and Collector, Giridih, Hazaribagh, is appointed temporarily to have charge of the Barh subdivision of the Patna district, during the absence, on leave, of Mr. V. B. Cobden-Ramsay, or until further orders.

Hazaribagh.
Patna.

No. 1798A.D.—The 5th July 1902.—Babu Prasanna Kumar Karfarmah, Deputy Magistrate and Deputy Collector, on leave, is posted to the head-quarters station of the Khulna district.

Khulna.

No. 1800A.D.—The 5th July 1902.—Babu Satyendra Nath Das, Deputy Magistrate and Deputy Collector, Madhipura, Bhagalpur, is appointed to have charge of the Thakurgaon subdivision of the Dinajpur district.

Bhagalpur.
Dinajpur.

No. 1810A.D.—The 5th July 1902.—Mr. C. J. S. Faulder, Magistrate and Collector, on leave, is appointed to be Additional Commissioner of the Patna Division, with effect from the 6th June 1902, *vice* Mr. J. G. Ritchie, appointed to be Commissioner of a Division.

Patna.

No. 1812A.D.—The 7th July 1902.—Babu Ram Narain Banerjee, Deputy Magistrate and Deputy Collector, Burdwan, is transferred to the head-quarters station of the Birbhum district.

Burdwan.
Birbhum.

No. 1814A.D.—The 7th July 1902.—Babu Kumud Bandhu Das Gupta, Deputy Magistrate and Deputy Collector, Birbhum, is transferred to the head-quarters station of the Burdwan district.

Birbhum.
Burdwan.

No. 1826A.D.—The 7th July 1902.—Babu Jogendra Naraiyan Mitra, Deputy Magistrate and Deputy Collector, on leave, is posted to the head-quarters station of the Darbhanga district.

Darbhanga.

No. 1829A.D.—The 7th July 1902.—Babu Brajendra Nath Roy, Deputy Magistrate and Deputy Collector, on leave, is appointed to have charge of the Banka subdivision of the Bhagalpur district.

Bhagalpur.

No. 1831A.D.—The 7th July 1902.—Babu Shyama Pada Chowdhry, Deputy Magistrate and Deputy Collector, Banka, Bhagalpur, is appointed to have charge of the Supaul subdivision of that district.

Bhagalpur.

No. 1833A.D.—The 7th July 1902.—Babu Kanti Bhushan Sen, Deputy Magistrate and Deputy Collector, Khulna, is appointed to have charge of the Madhipura subdivision of the Bhagalpur district.

Khulna.
Bhagalpur.

No. 1835A.D.—The 7th July 1902.—Mr. A. W. Warde-Jones, Deputy Magistrate and Deputy Collector, Supaul, Bhagalpur, is transferred to the head-quarters station of the Purnea district.

Bhagalpur.
Purnea.

No. 1863A.D.—The 8th July 1902.—Sahibzada Walli Mohamed Shah is appointed substantively *pro tempore* to be a Deputy Magistrate and Deputy Collector of the eighth grade, and is posted to the head-quarters station of the Nadia district.

Nadia.

VOLUNTEERS.—*No. 1844A.D.—The 7th July 1902.*—Lieutenant John Dunbar Macrae, Hyderabad Volunteer Rifles, is transferred, in the same rank, to the 2nd (Presidency) Battalion, Calcutta Volunteer Rifles, with effect from the 22nd May 1902, *vice* Lieutenant S. C. Aldridge, resigned.

REGISTRATION.—*No. 1773A.D.—The 5th July 1902.*—Maulvi Abdul Halim, Rural Sub-Registrar of Bamni, in the district of Noakhali, is appointed to act as Special Sub-Registrar of Noakhali, during the absence, on leave, of Maulvi Abdul Aziz, or until further orders.

Noakhali.

No. 1792A.D.—The 5th July 1902.—Babu Jugal Krishna Ray, Rural Sub-Registrar of Kalia Chak, in the district of Malda, is appointed to act as Special Sub-Registrar of Malda, during the absence, on leave, of Babu Satish Chunder Mukherjee, or until further orders.

Malda.

EDUCATION.—*No. 1824A.D.—The 7th July 1902.*—Dr. Prasanna Kumar Ray, Officiating Principal of the Presidency College, is appointed to act as Vice-President of the Board of Management of the Alipore Reformatory School, during the absence, on leave, of Mr. A. C Edwards, or until further orders.

Calcutta.

ECCLESIASTICAL.—*No. 1777A.D.—The 5th July 1902.*—The Revd. Edwin Henry Lougher, of the American Free Baptist Mission, Balasore, is authorised, under section 6 of Act XV of 1872, to solemnize marriages between persons, one of whom is a Christian, or both of whom are Christians, and also, under section 9 of the Act, to grant certificates of marriage between persons who are Native Christians.

Balasore.

The Revd. Edwin Henry Lougher is also appointed, under Act VI of 1886, to be a Registrar of Births and Deaths.

OPIUM.—*No. 1698A.D.—The 4th July 1902.*—Mr. H. F. House, I.C.S., is appointed to act as Opium Agent, Benares, during the absence, on leave, of Mr. D. C. Baillie, or until further orders.

Benares.

PROMOTIONS.

No. 1806A.D.—The 5th July 1902.—The following appointment and confirmations are sanctioned in the Indian Civil Service, with effect from the 6th June 1902:—

Appointed to be Commissioner of a Division.

Mr. J. G. Ritchie, *vice* Mr. F. R. S. Collier, deceased.

Confirmed in the first grade of Magistrates and Collectors.

Mr. E. H. C. Walsh, *vice* Mr. C. J. S. Faulder, appointed to be Additional Commissioner of the Patna Division.

Confirmed in the second grade of Magistrates and Collectors.

Mr. J. H. E Garrett, *vice* Mr. E. H. C. Walsh.

PROMOTIONS—*concluded*.

POLICE.—*No. 1778J.D.—The 4th July 1902.*—Babu Kristo Charan Banerjee, Superintendent of the Calcutta Police, on Rs. 350, who is acting on Rs. 400, is promoted to act on Rs. 450, *vice* Superintendent R. Davies, on leave, or until further orders.
Calcutta.

No. 1780J.D.—The 4th July 1902.—Babu Brojendra Nath Chatterjee, Superintendent of the Calcutta Police, on Rs. 300, who is acting on Rs. 350, is promoted to act on Rs. 400, *vice* Superintendent Kristo Charan Banerjee, promoted.
Calcutta.

No. 1782J.D.—The 4th July 1902.—Mr. S. C. Aldridge, Officiating Superintendent of the Calcutta Police, on Rs. 300, is appointed to act on Rs. 350, *vice* Superintendent Brojendra Nath Chatterjee, promoted.
Calcutta

No. 1784J.D.—The 4th July 1902.—Mr. H. G. Haultain, First Class Inspector of the Calcutta Police, is appointed to act as Superintendent on Rs. 300, *vice* Superintendent S. C. Aldridge, promoted.
Calcutta.

LEAVE.

GENERAL.—*No. 1760A.D.—The 4th July 1902.*—Mr. V. B. Cobden-Ramsay, Assistant Magistrate and Collector, Barh, Patna, is allowed leave for two months and twenty-seven days, under article 291 of the Civil Service Regulations, with effect from the 8th August 1902.
Patna.

No. 1770A.D.—The 4th July 1902.—Mr. A. W. Cook, I.C.S., has been granted by His Majesty's Secretary of State for India a further extension of furlough for three months on medical certificate.

No. 1796A.D.—The 5th July 1902.—Babu Barada Das Bose, Deputy Magistrate and Deputy Collector, Thakurgaon, Dinajpur, is allowed combined leave for six months, viz, privilege leave for two months and twenty-seven days, under article 264A of the Civil Service Regulations, with effect from the date on which he may be relieved, and furlough for the remaining period under article 371 of the Regulations.
Dinajpur.

POLICE.—*No. 1776J.D.—The 4th July 1902.*—Mr. R. Davies, Superintendent of the Calcutta Police, on Rs. 450, is allowed leave for twelve months, viz., privilege leave for three months under article 264A of the Civil Service Regulations, with effect from the 19th May 1902, and furlough for the remaining period under article 371 of the Regulations.
Calcutta.

EDUCATION.—*No. 1853A.D.—The 7th July 1902.*—Babu Hem Chandra Sarkar, Professor, Rajshahi College, is allowed leave for two months and twenty days, under article 306 (*b*) of the Civil Service Regulations, with effect from the 7th July 1902, or any subsequent date on which he may avail himself of it.
Rajshahi.

REGISTRATION.—*No. 1790A.D.—The 5th July 1902.*—Babu Satish Chunder Mukherjee, Special Sub-Registrar of Malda, is allowed leave for one month, under article 294 of the Civil Service Regulations, with effect from the 2nd August 1902, or any subsequent date on which he may be relieved.
Malda.

EXCISE.—*No. 1688A.D.—The 3rd July 1902.*—Babu Abinash Chunder Sen, Special Excise Deputy Collector, Saran, is allowed furlough for three months, under article 371 of the Civil Service Regulations, in extension of the leave granted to him under the order of the 4th April 1902.
Saran.

C. E. BUCKLAND,
Chief Secy. to the Govt. of Bengal.

NOTIFICATION—No. 1813A.D.

The 7th July 1902.—The report of the Central Examination Committee having been received, the result of the first half-yearly Departmental Examination of Assistant Magistrates and others, held on the 5th May 1902 and the two following days, is published for general information:—

I.—SECOND OR HIGHER STANDARD.

(*i*) The officer noted below has passed completely:—

Civil Officer.

1. Babu Jitendra Nath Sircar.

(*ii*) The following officers, who passed partially at previous examinations, have now passed in the remaining subject mentioned opposite their names:—

Civil Officers.

1. Mr. Jotindro Nath Roy ... Accounts.
2. Babu Sris Chandra Basu ... Hindustani.
3. Mr. G. E. Lambourn ... Bengali.
4. „ H. R. T. S. Perrott ... Bengali.
5. „ J. F. Graham ... Hindustani.
6. „ P. W. Murphy ... Bengali.
7. „ Manmatha Krishna Deb ... Accounts.
8. Babu Bijoy Kumar Ganguli ... Hindustani (at option).
9. „ Manmatha Nath Mookerjee ... Accounts.

(*iii*) The following officers have passed partially, and are still liable to examination in the remaining subject or subjects mentioned opposite their names in column 4:—

No.	Name.	Now passed in—	Still liable to examination in—
1	2	3	4
	(*a*) *Civil Officers.*		
1	Mr. F. W. Martin ...	Hindustani and Accounts	Law by both Standards, and Bengali at option by the Higher Standard.
2	Maulvi Syed Mahamed Abul Hayat.	Law ...	Bengali and Accounts.
3	Mr. R. R. Garlick ...	Bengali ...	Law, Hindustani and Accounts.
4	Maulvi Abdul Bari ...	Accounts ...	Law, Bengali, and Hindustani at option.
5	„ Syed Abdus Samad ...	Law ...	Bengali by both Standards, and Accounts by the Higher Standard.
6	Babu Aukshay Kumar Sur ...	Do. ...	Accounts, and Hindustani at option.
7	Mr. W. D. R. Prentice ...	Law, Hindustani and Accounts.	Bengali.
8	Babu Baij Nath Sahai (No. II)	Accounts ...	Bengali at option.
9	Mr. J. C. Leighton ...	Ditto ...	Law, Bengali and Hindustani.
10	„ G. Milne ...	Hindustani and Accounts	Law and Bengali.
11	„ C. W. E. Connolly ...	Hindustani ...	Bengali at option.
12	„ S. E. Stinton ...	Law ...	Bengali by both Standards, and Hindustani and Accounts by the Higher Standard.
13	Babu Hiranya Kumar Das Gupta.	Law ...	Accounts, and Hindustani at option.
14	„ Raj Narayan Banerjee ...	Accounts ...	Hindustani at option.
15	„ Praphulla Sankar Sen ...	Law and Accounts ...	Ditto.
16	„ Dayanidhi Das ...	Ditto ...	Ditto.
17	„ Rebati Mohan Chakravarti	Ditto ...	Ditto.
	(*b*) *Police Officers.*		
18	Mr. H. U. Baker ...	Law	Bengali.
19	„ C. W. T. Feilmann ...	Do.	Ditto.
20	„ R. G. Watling ...	Do.	Hindustani and Bengali.
21	Lieut. F. S. McNamara ...	Law and Hindustani ...	Bengali.

II.—FIRST OR LOWER STANDARD.

(*i*) The officers noted below have passed completely:—

(*a*) *Civil Officers.*

1. Mr. F. M. Luce.
2. Babu Ambica Charan Dutta.
3. „ Radha Krishna Goswami.
4. Mr. W. D. R. Prentice.
5. „ J. C. Leighton.
6. „ G. Milne.
7. Mr. J. A. L. Swan.

(*b*) *Police Officers.*

8. Mr. R. J. Hirst.
9. „ C. A. Tegart.
10. Mr. W. A. Knyvett.
11. „ M. L. A. Luffman.

(*ii*) The following officers, who passed partially at previous examinations, have now passed in the remaining subject mentioned opposite their names;—

(*a*) *Civil Officer.*

1. Babu Akshay Kumar Sur ... Accounts.

(*b*) *Police Officer.*

2. Mr. F. C. Swaine ... ... Law.

(*iii*) The following officers have passed partially, and are still liable to examination in the remaining subject or subjects mentioned opposite their names in column 4:—

No.	Name.	Now passed in—	Still liable to examination in—
1	2	3	4
	Civil Officers.		
1	Saiyad Hasan Mirza ...	Hindustani ...	Law and Accounts.
2	Maulvi Syed Reza Karim Ahmed.	Ditto ...	Ditto.
3	Mr. E. A. Oakley ...	Law and Accounts ...	Bengali.
4	„ C. H. Reid	Accounts	Ditto.
5	Maulvi Syed Abdus Samad ...	Ditto	Ditto.
6	Babu Prafulla Chandra Ghose	Ditto	Law.
7	„ Ananta Mohan Ray ...	Ditto	Law and Uriya.
8	„ Chunder Sikhar Mukerjee	Ditto	Ditto.
9	„ Chandra Kumar Mathur	Law ...	Accounts and Uriya.
10	Mr. W. G. Shout ...	Hindustani and Accounts	Law.
11	Maulvi Shamsuddin Haidar ...	Accounts	Law.
12	Mr. P. G. Rogers ...	Hindustani ...	Accounts.
13	„ S. E. Stinton ...	Accounts	Bengali.
14	Babu Amarendra Nath Pal Chaudhuri.	Ditto	Law.
15	Babu Charu Chandra Chaudhuri.	Law	Accounts.

III.

Captain B. C. Oldham, I.M.S., has passed in Bengali by the colloquial test.

IV.

The following Forest Officer has passed in the subject mentioned opposite his name:—

1. Mr. E. R. Comber ... ... Forest Law.

V.

The following officers have passed in "Law for the officers of the Public Works Department" in the Part or Parts mentioned against the name of each:—

1. Mr. Bishan Swarup ... ... Part (s) "C."
2. Babu Kalidhone Bhattacharjee ... „ "A."
3. „ Surendra Nath Sircar ... „ "A."
4. Munshi Abdool Hakim ... „ "B" and "C."
5. „ Shaik Kursed Ali ... „ "A."
6. Babu Hari Prosad Ghosal ... „ "A."
7. „ Ashutosh Bose ... ... „ "B." and "C."
8. Mr. C. Addams-Williams ... „ "A" and "B."
9. Babu Mohendra Nath Dutt ... „ "C."
10. Mr. G. G. Dey ... ... „ "B."

C. E. BUCKLAND,
Chief Secy. to the Govt. of Bengal.

REVENUE DEPARTMENT—(OPIUM).

NOTIFICATION—No. 1430T.R.

The 5th June 1902.—In Notification No. 1854-O., dated the 21st March 1902, ordering certain promotions owing to the retirement of Mr. P. J. Luard, Sub-Deputy Opium Agent, published in Part I, page 438 of the *Calcutta Gazette* of the 26th idem, add the words "sub. *pro tem.*" after the word "ungraded" against the name of Mr. H. C. Roy.

W. C. MACPHERSON,
Offg. Secy. to the Govt. of Bengal.

NOTIFICATION—No. 1434T.R.

The 5th July 1902.—Mr. A. C. Bryson, Sub-Deputy Opium Agent, Fyzabad, is granted privilege leave for two months and twenty-four days, under article 291 of the Civil Service Regulations, with effect from the 15th July 1902, or any subsequent date on which he may avail himself of it.

Fyzabad.

W. C. MACPHERSON,
Offg. Secy. to the Govt. of Bengal.

NOTIFICATION—No. 1461T.R.

The 7th July 1902.—Mr. G. W. Oliphant, Assistant Opium Agent, Benares, on leave, reported his departure from India on the afternoon of the 7th June 1902.

Benares.

W. C. MACPHERSON,
Offg. Secy. to the Govt. of Bengal.

REVENUE DEPARTMENT—(LAND REVENUE).

NOTIFICATION—No. 1431T.R.

The 5th July 1902.—The following correction is hereby made in Government Notification No. 749T.R., dated the 26th May 1902, published in Part I, page 747 of the *Calcutta Gazette* of the 28th idem, appointing Babu Sarat Chandra Mukerjee, Sub-Deputy Collector, to be Settlement Officer of certain villages in district Nadia, owned by Babu Nafar Chandra Pal Chowdhry of Natudaha:—

Nadia.

In the first, fifth and seventh lines of the marginal list of mauzas, for the words "No. 366, Munshipur," substitute the words "No. 336, Munshipur."

W. C. MACPHERSON,
Offg. Secy. to the Govt. of Bengal.

NOTIFICATION—No. 1432T.R.

The 5th July 1902.—The following corrections are hereby made in Government Notification No. 1257L.R., dated the 25th February 1902, published in Part I, page 330 of the *Calcutta Gazette* of the 26th idem, regarding the survey and record of rights of certain villages in district Nadia:—

Nadia.

In the fourth line, *for* the words "undermentioned villages situated in police-station Damurkuda, subdivision Chuadanga," substitute the words "undermentioned villages of which seven are situated in thana Damurhuda, subdivision Chuadanga, and one (viz., Jaynagar) in thana Krishnaganj in the Sadar subdivision."

In the first and seventh lines of the list of mauzas, *for* "366, Munshipur," *substitute* "336, Munshipur."

W. C. MACPHERSON,
Offg. Secy. to the Govt. of Bengal.

NOTIFICATION—No. 1433T.R.

The 5th July 1902.—The following corrections are hereby made in Government Notification No. 748T.R., dated the 26th May 1902, published in Part I, page 747 of the *Calcutta Gazette* of the 28th idem, relating to the survey and record of rights of certain villages in district Nadia:—

Nadia.

In the fifth line, *for* the words "eight villages in the Chuadanga subdivision" *substitute* the words "eight villages of which seven are situated in the Chuadanga subdivision and one (Jaynagar) in the Sadar subdivision."

In the first and seventh lines of the list of mauzas, *for* "No. 366, Munshipur," *substitute* "No. 336, Munshipur."

W. C. MACPHERSON,
Offg. Secy. to the Govt. of Bengal.

NOTIFICATION—No. 1435T.R.

The 5th July 1902.—The price list (retail) of Staple Food-crops in the local areas of Bengal, prepared under section 39 of the Bengal Tenancy Act (No. VIII of 1885), for the year 1901, is published for general information.

W. C. MACPHERSON,
Offg. Secretary to the Government of Bengal.

BURDWAN DIVISION.

1	2	3	4	5	6
DISTRICT.	Local areas.	Marts at which prices were taken.	Staple-food crop or crops.	Quantities per rupee in seers of 80 tolas, Company's weight.	REMARKS.
				SR. CH.	
BURDWAN	Sadar subdivision ...	Burdwan ...	Rice ...	11 11	
	Raniganj ditto ...	Raniganj ...	Do. ...	12 1⅓	
	Katwa ditto ...	Katwa ...	Do. ...	12 2 1/12	
	Kalna ditto ...	Kalna ...	Do. ...	10 8 1/12	
BIRBHUM	Sadar ditto ...	Suri ...	Do. ...	11 12	
	Rampur Hât ditto ...	Rampur Hât ...	Do. ...	12 6 5/12	
BANKURA	Sadar ditto ...	Bankura ...	Do. ...	12 5⅓	
	Vishnupur ditto ...	Vishnupur ...	Do. ...	11 13⅓	
MIDNAPORE	Sadar ditto ...	Midnapore ..	Do. ...	11 13½	
	Ghatal ditto ...	Ghatal ...	Do. ...	11 8 1/12	
	Tamluk ditto ...	Tamluk ...	Do. ...	10 6 4/6	
	Contai ditto ...	Contai ...	Do. ...	11 9⅓	
HOOGHLY	Sadar ditto ...	Hooghly ...	Do. ..	9 12⅙	
	Serampore ditto ...	Bhadreswar ...	Do. ...	10 0¾	
	Arambagh ditto ...	Jahanabad ...	Do. ...	11 14 7/12	
	Howrah ditto ...	Mohiari ...	Do. ...	9 12 7/12	
	Ulubaria ditto ...	Ulubaria ...	Do. ...	9 8	

PRESIDENCY DIVISION.

24-PARGANAS.	Diamond Harbour subdivision.	Mugra Hât ...	Rice ...	10 11⅓	
	Sadar subdivision ...	Chetla Hât ...	Do. ...	9 10⅓	
	Barasat ditto ...	Barasat ...	Do. ...	9 10	
	Basirhat ditto ...	Baduria Baraon.	Do. ...	10 5¾	

N.B.—The price is the average for four quarters where not otherwise stated.

PRESIDENCY DIVISION—*concluded.*

1	2	3	4	5	6
DISTRICT.	Local areas.	Marts at which prices were taken.	Staple food-crop or crops.	Quantities per rupee in seers of 80 tolas, Company's weight.	REMARKS
				SR. CH.	
NADIA ...	Kushtia subdivision ...	Bahadurkhali	Rice *Aman* ...	.....	
			Aus ...	10 8	
	Meherpur ditto ...	Kaliabazar ...	Do. *Aman* ...	10 11½	Average for three quarters.
			Aus ...	12 11½	Average for two quarters.
	Chuadanga ditto ...	Chuadanga ...	Do. *Aman* ...	10 13 7/12	Average for three quarters.
			Aus ...	12 2 5/12	
	Sadar ditto ...	Goaree ...	Do. ...	10 8¾	
	Ranaghat ditto ...	Ranaghat ...	Do. *Aman* ...	10 2½	
			Aus ...	12 13½	
MURSHIDABAD.	Sadar ditto ...	Berhampore ...	Do. ...	11 8¾	
	Lalbagh ditto ...	Lalbagh ...	Do. ..	11 5½	
	Jangipur ditto ...	Jangipur ...	Do. ...	11 0⅔	Average for three quarters.
	Kandi ditto ...	Kandi ...	Do. ...	13 2⅔	
JESSORE ...	Jhenida ditto ...	Jhenida ...	Do. *Aman* ..	11 13½	Average for three quarters.
			Aus ...	12 15½	
	Magura ditto ...	Magura ...	Do. ...	11 13 7/12	Average for three quarters.
	Sadar ditto ...	Jessore ...	Do. *Aman* ...	10 14½	
			Aus ...	11 5¾	
	Narail ditto ...	Narail ...	Do. *Aman* ...	11 0⅔	Average for three quarters.
			Aus ...	11 8½	Average for two quarters
	Bangaon ditto ...	Bangaon ...	Do. *Aman* ...	.....	
				12 0 11/12	
KHULNA ...	Sadar subdivision ...	Khulna ...	Do. ...	11 3	
	Satkhira ditto ...	Satkhira ...	Do. ...	10 2	
	Bagerhat ditto ..	Bagerhat ...	Do. ...	11 4⅔	

RAJSHAHI DIVISION.

				SR. CH.	
RAJSHAHI	Sadar subdivision ...	Boalia ...	Rice ..	11 2½	
	Naugaon ditto ...	Naugaon ...	Do. ...	11 3 11/12	
	Nator ditto ...	Nator ...	Do. ...	11 10	

N.B.—The price is the average for four quarters where not otherwise stated.

RAJSHAHI DIVISION—*concluded.*

1	2	3	4	5	6
District.	Local areas.	Marts at which prices were taken.	Staple food-crop or crops.	Quantities per rupee in seers of 80 tolas, Company's weight.	Remarks.
				Sr. ch.	
Dinajpur ...	District of Dinajpur ...	Railway Bazar Hât.	Rice ...	11 10¾	
Jalpaiguri	Sadar subdivision ...	Dinbazar ...	Do. *Aman* ...	11 5½	
			Do. *Aus* ...	11 13½	Average for one quarter.
Rangpur	Sadar ditto ...	Rangpur ...	Do. ...	10 7½	
	Nilphamari ditto ...	Nilphamari ...	Do. ...	11 10½	
	Kurigaon ditto ...	Kurigaon ..	Do. *Aman* ...	9 14	
			Do. *Aus* ...	12 0	Average for one quarter.
	Gaibanda ditto ...	Gaibanda ..	Do. ...	9 12¾	
Bogra ...	District of Bogra ...	Bogra ...	Do. ...	11 7	
Pabna ...	Do. of Pabna ...	Pabna ...	Do. *Aman* ..	11 0	Average for three quarters.
			Do. *Aus* ...	11 4	Average for one quarter.

DACCA DIVISION.

				Sr. ch.	
Dacca ...	Narayanganj subdivision	Madanganj ...	Rice ...	9 6½	
	Sadar ditto ..	Dacca ...	Do. ...	9 15¾	
	Manikganj ditto ...	Manikganj ...	Do. ...	10 2½	
	Munshiganj ditto ...	Mirkadim ...	Do. ...	10 10½	
Mymensingh.	Jamalpur ditto ..	Jamalpur ...	Do. ...	9 8¾	
	Tangail ditto ...	Kagmari ...	Do. ...	10 5$\frac{1}{16}$	
	Netrokona ditto ..	Netrokona ...	Do. ...	9 11¾	
	Sadar ditto ...	Nasirabad ...	Do. ...	9 5	
	Kishorganj ditto ..	Kishorganj ...	Do. ...	8 9$\frac{11}{16}$	
Faridpur	Sadar ditto ...	Faridpur ...	Do. ...	10 6⅝	
	Madaripur ditto ...	Madaripur ...	Do. ...	10 5⅓	
	Goalundo ditto ...	Goalundo ...	Do. ...	10 0¼	
Backergunge.	Patuakhali ditto ...	Patuakhali ...	Do. *Aman* ...	10 7⅔	
			Do. *Aus* ...	12 8½	Average for two quarters
	Pirojpur ditto ...	Pirojpur ...	Do. *Aman* ...	9 2⅝	Average for one quarter.
			Do. *Aus* ...	9 9	

N.B.—The price is the average for four quarters where not otherwise stated.

DACCA DIVISION—*concluded.*

1	2	3	4	5	6
District.	Local areas.	Marts at which prices were taken.	Staple food-crop or crops.	Quantities per rupee in seers of 80 tolas, Company's weight.	Remarks.
				Sr. ch.	
Backergunge *concld.*	Sadar subdivision ...	Barisal ...	Rice { *Aman* ...	9 11⅓	
			Aus ...	11 10	Average for one quarter.
	Dakhin Shahbazpur subdivision.	Bhola ...	Do. { *Aman* ...	9 11⅓	
			Aus ...	12 1	Ditto.

CHITTAGONG DIVISION.

				Sr. ch.	
Tippera ...	Brahmanbaria subdivision	Brahmanbaria	Rice ...	9 8½	
	Sadar ditto ...	Comilla ...	Do { *Aman* ...	9 7 7/13	
			Aus ...	11 0½	Average for one quarter.
	Chandpur ditto ...	Chandpur ...	Do. ...	10 11⅔	
Noakhali	Sadar ditto ...	Kalitara Hât	Do. ...	11 4⅓	
	Fenny ditto ...	Fenny Hât ...	Do. ...	12 1 6/13	
Chittagong.	Sadar ditto ...	Chittagong ...	Do. ...	11 12⅓	
	Cox's Bazar ditto ...	Cox's Bazar ...	Do. ...	12 11⅓	

PATNA DIVISION.

				Sr. ch.	
Patna ...	Sadar subdivision, excluding thana Maner.	Marufganj ...	*Makai* upland ...	19 15	
			Rice lowland ...	13 0¾	
	Dinapore subdivision, with thana Maner.	Dinapore ...	Barley upland ...	18 2⅔	
			Rice lowland ...	11 14⅓	
	Barh subdivision ...	Barh ...	*Makai* upland ...	17 14	
			Rice lowland ...	12 0 1/12	
	Bihar ditto ...	Bihar ...	Wheat upland ...	10 7⅝	
			Rice lowland ...	10 5⅓	
Gaya ...	Sadar ditto ...	Gaya ...	Wheat upland ...	11 9¼	
			Rice lowland ...	10 10⅔	
	Nawada ditto ...	Nawada ...	Wheat upland ...	11 3⅓	
			Rice lowland ...	11 9	

N.B.—The price is the average for four quarters where not otherwise stated.

PATNA DIVISION—*continued.*

1	2	3	4	5	6
District.	Local areas.	Marts at which prices were taken.	Staple food-crop or crops.	Quantities per rupee in seers of 80 tolas, Company's weight.	Remarks.
				Sr. ch.	
Gaya—*concld.*	Jahanabad subdivision ...	Jahanabad ...	Wheat upland ...	11 14⅔	
			Rice lowland ...	11 5-⅓-	
	Aurangabad ditto ...	Aurangabad	Wheat upland. White	12 2⅔	
			Wheat upland. Red	13 2½	
			Rice lowland ...	11 7 11/12	
Shahabad	Sadar subdivision ...	Arrah ...	Wheat upland ...	11 11 1/12	
			Rice lowland ...	11 6 1/12	
	Buxar ditto ...	Buxar ...	Wheat up land. White	11 14	
			Wheat up land. Red	12 4	
			Rice lowland ...	12 3½	
	Sasaram ditto ...	Sasaram ...	Wheat upland ...	12 4 7/12	
			Rice lowland ...	11 4½	
	Bhabhua ditto ...	Bhabhua ...	Wheat upland ...	12 0⅔	
			Rice lowland ...	10 5	
Saran ...	Gopalganj ditto ...	Mirganj ...	*Makai* upland ...	20 0⅛	
			Rice lowland ...	11 10	
	Siwan ditto ...	Siwan ...	*Makai* upland ...	20 2½	
			Rice lowland ...	12 4⅝	
	Sadar ditto ...	Chapra ...	*Makai* upland ...	19 5¾	
			Rice lowland ...	10 14⅛	
Champaran.	Sadar ditto ...	Motihari ...	*Makai* upland ...	20 15	
			Rice lowland ...	12 12½	
	Bettiah ditto ...	Bettiah ...	*Makai* upland ...	22 2	
			Rice lowland ...	13 13½	
Muzaffarpur.	Sitamarhi ditto ...	Sitamarhi ...	*Makai* upland ...	23 5⅔	
			Rice lowland ...	12 10 1/12	
	Sadar ditto ...	Muzaffarpur	*Makai* upland ...	19 8	
			Rice lowland ...	11 10	
	Hajipur ditto ...	Hajipur ...	*Makai* upland ...	19 1⅔	
			Rice lowland ...	11 15½	

N.B.—The price is the average for four quarters where not otherwise stated.

PATNA DIVISION—*concluded.*

1	2	3	4	5	6
DISTRICT.	Local areas.	Marts at which prices were taken.	Staple food-crop or crops.	Quantities per rupee in seers of 80 tolas, Company's weight.	REMARKS.
				SR. CH.	
DARBHANGA.	Madhubani subdivision ...	Madhubani	*Murwa* upland ...	20 9 1/12	
			Rice lowland ...	12 13 3/4	
	Sadar ditto ...	Darbhanga	*Murwa* upland ...	21 14 3/4	
			Rice lowland ...	13 2 1/12	
	Samastipur ditto ...	Samastipur	*Makai* upland ...	20 3 1/3	
			Rice lowland ...	13 2 3/4	

BHAGALPUR DIVISION.

				SR. CH.	
MONGHYR	Sadar subdivision ...	Monghyr ...	Wheat upland ..	13 7 7/12	
			Rice lowland ...	12 4 1/4	
	Begusarai ditto ...	Begusarai ...	Wheat upland ...	12 8 11/12	
			Rice lowland ...	12 6 11/12	
	Jamui ditto ...	Jamui ...	Wheat upland ...	11 8	
			Rice lowland ...	11 5 1/3	
BHAGALPUR.	Sadar ditto ...	Bhagalpur ...	*Makai* upland ...	19 6 1/3	Average for two quarters.
			Rice lowland ...	13 0 6/12	
	Supaul ditto ...	Supaul ...	*Murwa* upland ...	24 5 1/3	
			Rice lowland ...	14 7 1/3	
	Madhipura ditto ...	Madhipura ...	*Murwa* upland ...	29 9 1/3	
			Rice lowland ...	16 4 3/3	
	Banka ditto ...	Banka ...	*Makai* upland ...	16 10 2/3	Average for three quarters.
			Rice lowland ...	14 2 2/3	
PURNEA ...	Araria subdivision ...	Araria ...	Wheat upland ...	15 9 1/3	
			Rice lowland ...	12 15 1/3	
	Kishanganj ditto ...	Kishanganj	Wheat upland ...	9 12	
			Rice lowland ...	11 4	
	Sadar ditto ...	Kasba ...	Wheat upland ...	14 12	
			Rice lowland ...	11 14 1/3	
MALDA ...	District of Malda ...	Balia Nawabganj.	Rice ...	12 4 1/4	

N.B.—The price is the average for four quarters where not otherwise stated.

ORISSA DIVISION.

1	2	3	4	5	6
DISTRICT.	Local areas.	Marts at which prices were taken.	Staple food-crop or crops.	Quantities per rupee in seers of 80 tolas, Company's weight.	REMARKS.
				SR. CH.	
CUTTACK	Sadar subdivision ...	Cuttack town	Rice ...	13 7	
	Kendrapara ditto ...	Kendrapara ,,	Do. ...	15 7 4/12	
	Jajpur ditto ...	Jajpur ,,	Do. ...	14 9 1	
	Banki ditto ...	Charchika Hât	Do. ...	15 2	
BALASORE	Bhadrak ditto	Bhadrak ..	Do. ...	16 0	
		Chandbali ...	Do. ..	13 14	
	Sadar ditto ...	Balasore ...	Do. ...	12 14 1/2	
PURI ...	Sadar ditto ...	Puri ...	Do. ...	13 11 11/12	
	Khurda ditto ...	Khurda ...	Do. ...	15 15 7/12	

N. B.—The price is the average for four quarters where not otherwise stated.

GENERAL DEPARTMENT—(EDUCATION).

DECLARATION—No. 2111.

The 8th July 1902.—Whereas it appears to the Lieutenant-Governor of Bengal that land is required to be taken by Government at the public expense for a public purpose, viz., for School of Engineering in the town of Dacca, in the village of Rai Saheb's Bazar, pargana Jahangirnagar, zila Dacca, it is hereby declared that for the above purpose a piece of land measuring, more or less, 14 bighas 16 cottahs 10 dhurs of standard measurement, bounded on the—

Dacca.

North—By lakhiraj lands of Dengu Khansama, Jamini Kanta Banerji, and part of Lal Chand Dhubi's house and a lane and the pucca house of Lal Mohan and Rash Mohan Basak,

South—By Church Lane,

East—By Kalta Bazar Lane,

West—By Johnson Road and part of Lal Chand Dhubi's house,

is required within the aforesaid village of Rai Saheb's Bazar.

This declaration is made, under the provisions of section 6 of Act I of 1894, to all whom it may concern.

A plan of the land may be inspected in the office of the Collector of Dacca.

W. C. MACPHERSON,
Offg. Secy. to the Govt. of Bengal.

GENERAL DEPARTMENT—(EMIGRATION).

NOTIFICATION—No. 2112.

The 8th July 1902.—The following rule is to be substituted for rule 5 of the rules under Act VI of 1901, published with Notification No. 3412, dated the 15th October 1901:—

5. Every Embarkation Agent and Medical Inspector (appointed by the Lieutenant-Governor of Bengal) shall forward to the Superintendent of Emigration, to whom he is subordinate, *not later than the 20th July*, an annual report reviewing all the operations of *the year, from the 1st July to the 30th June*, connected with the recruitment, accommodation in depôts and transport of emigrants or intending emigrants within his local area, and each Superintendent of Emigration shall, not later than the *1st September*, submit to the

Government of Bengal his annual report for the same period with reference to the area to which he has been appointed. Such report shall be based on the information available in his own office and on that furnished by the aforesaid officers in their respective reports, and shall treat of the following points, viz., the management and condition of the depôts licensed under the Act, the conduct of recruitment, the sickness and mortality in depôts, the number of emigrants despatched to the Tea districts, the results of the passage thereto, with special reference to mortality, and such other subjects as may be prescribed by the Government of Bengal.

W. C. MACPHERSON,
Offg. Secy. to the Govt. of Bengal.

GENERAL DEPARTMENT—(ECCLESIASTICAL).

NOTIFICATION—No. 2110.

The 8th July 1902.—The following programme of the proposed visitation tour of the Most Reverend the Lord Bishop of Calcutta and Metropolitan in India and Ceylon is published for general information:—

Station.	Arrival.	Departure.	Remarks.
Darjeeling ...	.....	Saturday, July 12th	
Kurseong ...	Saturday, July 12th	Monday, „ 14th	
Jalpaiguri ...	Monday, „ 14th	Tuesday, „ 15th	
Calcutta ...	Wednesday, „ 16th	Saturday, „ 19th	
Midnapore ...	Saturday, „ 19th	Wednesday, „ 23rd	Visiting Khargpur.
Balasore ...	Wednesday, „ 23rd	Friday, „ 25th	
Cuttack ...	Friday, „ 25th	Monday, „ 28th	
Khurda Road	Monday, „ 28th	Tuesday, „ 29th	
Puri ...	Tuesday, „ 29th	Friday, August 1st	
Berhampur (Ganjam).	Friday, August 1st	Monday, „ 4th	
Calcutta ...	Tuesday, „ 5th	.....	Returning to Darjeeling before the end of August.

Letters should, as a general rule, be addressed to those stations where a Sunday is spent, the names of which are printed in italics.

Matters of routine requiring immediate attention may be referred to the Bishop's Commissary, the Revd. A. Kitchin, Officiating Archdeacon of Calcutta, St. Thomas's Parsonage, Free School Street, Calcutta.

The Bishop desires to inspect the Church Registers, Record Books and Accounts at each station which he visits in the diocese of Calcutta.

W. C. MACPHERSON,
Offg. Secy. to the Govt. of Bengal.

FINANCIAL DEPARTMENT.

NOTIFICATION—No. 948T.F.

The 3rd July 1902.—The following note is added to rule 7, section X of the Rules for the guidance of officers engaged in the administration of the Salt Department in Bengal, published under Notification No. 149T.F., dated the 12th September 1898, at pages 997-1002 of Part I of the *Calcutta Gazette* of the 21st idem:—

"NOTE.—Duty-paid salt in bags intended to be conveyed partly by boat and partly by steamer need not necessarily have a separate boat to each rowana."

E. W. COLLIN,
Offg. Secy. to the Govt. of Bengal.

MEDICAL DEPARTMENT.

No. 1231T.M.—The 4th July 1902.—Captain W. W. Clemesha, I.M.S., Officiating Deputy Sanitary Commissioner, Northern Bengal Circle, is appointed temporarily to act as Sanitary Commissioner, Bengal, during the absence, on privilege leave, of Captain B. H. Deare, I.M.S., or until further orders.

Calcutta.

No. 1230T.M.—The 7th July 1902.—Captain A. A. F. McArdle, I.M.S., is appointed to act as Professor of Comparative Anatomy and Zoology, Medical College, Calcutta, during the absence, on leave, of Major A. W. Alcock, I.M.S., or until further orders.

Calcutta.

No. 1243T.M.—The 7th July 1902.—Captain T. H. Delany, I.M.S., is appointed to be substantively *pro tempore* Resident Physician, Medical College Hospital, Calcutta, during the absence, on deputation, of Captain C. J. Robertson-Milne, I.M.S., or until further orders.

Calcutta.

This cancels the Notification No. 595Medl., dated the 4th February 1902.

E. W. COLLIN,
Offg. Secy. to the Govt. of Bengal.

JUDICIAL DEPARTMENT.

No. 3038A.

APPOINTMENTS AND TRANSFERS.

No. 1680A.D.—The 2nd July 1902.—Babu Hari Nath Ray, Munsif of Comilla, in the district of Tippera, who has been appointed to act as Subordinate Judge of Jessore, is appointed temporarily to act as an Additional Subordinate Judge of Khulna, in the district of Jessore.

Tippera.
Jessore.

No. 1695A.D.—The 3rd July 1902.—Babu Rajendra Nath Roy, Munsif of Khulna, in the district of Jessore, is appointed to be a Munsif in the district of Midnapore, to be ordinarily stationed at the Sadar station, *vice* Babu Basanto Kumar Ghose, deceased. He is vested with the powers of a Judge of a Court of Small Causes for the trial of suits cognizable by such a Court up to the value of Rs. 100, within the local limits of the Sadar Munsifi of Midnapore.

Jessore.
Midnapore.

No. 1696A.D.—The 3rd July 1902.—Babu Chuni Lal Bose, B.L., is appointed to act, until further orders, as a Munsif in the district of Jessore, to be ordinarily stationed at Khulna.

Jessore.

No. 1782A.D.—The 5th July 1902.—Babu Satish Chandra Basu, M.A., B.L., is appointed to act as a Munsif in the district of Rajshahi, to be ordinarily stationed at Naugaon, during the absence, on leave, of Babu Lolit Mohan Das, or until further orders.

Rajshahi.

No. 1839A.D.—The 7th July 1902.—Babu Lolit Kumar Bose, Munsif of Muzaffarpur, in the district of Tirhut, is appointed to act as Subordinate Judge of Tirhut, during the absence, on leave, of Babu Gobinda Chandra Basak, or until further orders.

Tirhut.

No. 1841A.D.—The 7th July 1902.—Maulvi Wali Mahomed, B.L., is appointed to act as a Munsif in the district of Tirhut, to be ordinarily stationed at Muzaffarpur, during the absence, on deputation, of Babu Lolit Kumar Bose, or until further orders.

Tirhut.

No. 1647J.D.—The 26th June 1902.—The undermentioned gentlemen are appointed to be Honorary Magistrates of the Independent Bench at Ranaghat, in the district of Nadia:—

Nadia.

Babu Poresh Nath Mukerjee.
Babu Nashiram Sarkar.

No. 1799J.D.—The 3rd July 1902.—The undermentioned gentlemen are re-appointed to be Honorary Magistrates of the Sadar Independent Bench, in the district of Howrah:—

Howrah.

Rai Mohan Lal Khetri Bahadur.
Babu Atul Kristo Ghosh.
„ Jnanendra Nath Ganguli.
Munshi Kefaitulla Tarafdar.
Mr. Reginald Mortimer Higgs.
Babu Jnanendra Nath Bhuttacherjee.

LEAVE.

No. 1786A.D.—The 23rd June 1902.—Maulvi Mirza Bedar Bakht, Munsif of Bajitpur, in the district of Mymensingh, is allowed leave for three weeks, viz., seven days under article 309 of the Civil Service Regulations, and the remaining period under article 306 (*b*) of the same Regulations, with effect from the 8th July 1902, or from the date on which he may be relieved.

Mymensingh.

No. 1787 A.D.—The 24th June 1902 —Babu Trailakya Nath Som, Munsif, under orders of transfer to Kalna, in the district of Burdwan, is allowed leave for one month, under article 306 (*b*) of the Civil Service Regulations, in extension of that granted to him on the 13th May 1902.

Burdwan.

No. 1788 A.D.—The 25th June 1902.—Babu Umesh Chandra Sen, Munsif of Bagerhat, in the district of Jessore, is allowed leave for two months, under article 306 (*b*) of the Civil Service Regulations, with effect from the date on which he availed himself of it.

Jessore.

No. 1789 A.D.—The 27th June 1902.—Mr. Ibrahim Ahmed, Munsif of Purnea, is allowed leave for six weeks, under article 306 (*b*) of the Civil Service Regulations, in extension of that granted to him on the 3rd June 1902.

Purnea.

No. 3034 A.—The 30th June 1902.—Babu Lolit Mohan Das, Munsif of Naugaon, in the district of Rajshahi, is allowed leave for one month, under article 306 (*b*) of the Civil Service Regulations, with effect from the 8th July 1902, or from the date on which he may be relieved.

Rajshahi.

The 30th June 1902.—Babu Sidheswar Chuckerbutty, Munsif of Manikganj, in the district of Dacca, is allowed leave for ten days, under article 309 of the Civil Service Regulations, with effect from the 8th July 1902, or from the date on which he may be relieved.

Dacca.

No. 1627 A.D.—The 2nd July 1902.—Babu Mati Lal Haldar, Subordinate Judge of Saran, is allowed leave for twenty-one days, under articles 306 (*b*) and 377 of the Civil Service Regulations, with effect from the date on which he may be relieved.

Saran.

No. 3035 A.—The 3rd July 1902.—Babu Okhoy Coomar Mitra, Munsif of Motihari, in the district of Saran, is allowed leave for eight months, under article 369 of the Civil Service Regulations, with effect from the 12th February 1902, in supersession of that granted to him on the 18th February 1902.

Saran.

No. 3036 A.—The 4th July 1902.—Babu Jogendro Nath Mookerjee (No. II), Munsif of Barisal, in the district of Backergunge, is allowed leave for twenty-eight days, under article 306 (*b*) of the Civil Service Regulations, with effect from the 8th July 1902, or from the date on which he may be relieved.

Backergunge.

The 4th July 1902.—Babu Kamini Kumar Mookerjee, Munsif of Mymensingh, is allowed leave for four days, under article 306 (*b*) of the Civil Service Regulations, with effect from the 21st April 1902.

Mymensingh.

No. 1780 A.D.—The 5th July 1902.—Babu Jadupati Banerji, Subordinate Judge of Manbhum and Singhbhum, is allowed leave for one month, under article 306 (*b*) of the Civil Service Regulations, in extension of the leave granted to him under the order of the 6th June 1902.

Manbhum and Singhbhum.

No 1784 A.D.—The 5th July 1902.—Babu Lal Behari Dey, Subordinate Judge of Shahabad, is allowed leave for one month, under article 306 (*b*) of the Civil Service Regulations, in extension of the leave granted to him under the order of the 20th May 1902.

Shahabad.

No. 1802 A.D.—The 5th July 1902.—Babu Jogendro Lal Chaudhri, Subordinate Judge of Chittagong, is allowed leave for twenty-two days, under article 306 (*b*) of the Civil Service Regulations, with effect from the 8th July 1902.

Chittagong.

RESIGNATIONS.

No. 1802 J.D.—The 3rd July 1902.—The Lieutenant-Governor accepts the resignation tendered by Mr. William Atherton of his appointment as an Honorary Magistrate of the Sadar Independent Bench, in the district of Howrah.

Howrah.

No. 1877 J.D.—The 5th July 1902.—The Lieutenant-Governor accepts the resignation tendered by Babu Dinesh Chandra Roy of his appointment as an Honorary Magistrate of the Manikganj Independent Bench, in the district of Dacca.

Dacca.

POWERS.

No. 1758 A.D.—The 4th July 1902.—Babu Nabin Chandra Nag, Munsif of Sudharam, in the district of Noakhali, is vested with the powers of a Judge of a Court of Small Causes for the trial of suits cognizable by such a Court up to the value of Rs. 100, within the local limits of the Sudharam Munsifi.

Noakhali.

No. 1826 A.D.—The 7th July 1902.—Babu Jogendra Narayan Mitra, Deputy Magistrate, on leave, who has, under the order of this date, been posted to the head quarters station of the Darbhanga district, is vested with the powers of a Magistrate of the second class.

Darbhanga.

No. 1863 A.D.—The 8th July 1902.—Sahibzada Walli Mohamed Shah, who has, under the order of this date, been appointed substantively *pro tempore* to be a Deputy Magistrate of the eighth grade and posted to the head-quarters station of the Nadia district, is vested with the powers of a Magistrate of the third class.

Nadia.

No. 1648J.D.—The 26th June 1902.—Babus Poresh Nath Mukerjee and Nashiram Sarkar, who have been appointed to be Honorary Magistrates of the Independent Bench at Ranaghat, in the district of Nadia, are vested with the powers of a Magistrate of the third class.

Nadia.

No. 1800J.D.—The 3rd July 1902.—The undermentioned gentlemen, who have been re-appointed to be Honorary Magistrates of the Sadar Independent Bench, in the district of Howrah, are vested with the powers of a Magistrate of the second class :—

Howrah.

Babu Atul Kristo Ghosh. | Babu Jnanendra Nath Ganguli.
Mr. Reginald Mortimer Higgs.

The following gentlemen, who have been re-appointed to be Honorary Magistrates of the Sadar Independent Bench, in the district of Howrah, are vested with the powers of a Magistrate of the third class :—

Rai Mohan Lal Khetri Bahadur. | Munshi Kefaitulla Tarafdar.
Babu Jnanendra Nath Bhuttacherjee.

No. 1822J D.—The 3rd July 1902.—Under section 8 of the Sonthal Parganas Justice Regulation, No. V of 1893, the Lieutenant-Governor hereby appoints Mr. J. T. Babonau, Subdivisional Officer of Rajmahal, in the Sonthal Parganas, to be a Subordinate Judge within the local limits of the Rajmahal subdivision.

Sonthal Parganas.

C. E. BUCKLAND,
Chief Secy. to the Govt. of Bengal.

NOTIFICATION—No. 1664J.D.

The 27th June 1902.—Under section 3, Act I (B.C.) of 1876 (an Act to provide for the voluntary registration of Muhammadan marriages and divorces), the Lieutenant-Governor has been pleased to grant a license to Maulvi Syed Abdus Samad, authorizing him to register Muhammadan marriages and divorces, and to exercise the other functions of a Muhammadan Registrar within thana Nawabganj, in the district of Dacca.

Dacca.

C. E. BUCKLAND,
Chief Secy. to the Govt. of Bengal.

NOTIFICATION—No. 1665J.D.

The 27th June 1902.—Under section 2, Act XII of 1880 (an Act for the appointment of persons to the office of Kazi), the Lieutenant-Governor has been pleased to grant a *sanad* (license) to Maulvi Syed Abdus Samad, appointing him Kazi of thana Nawabganj, in the district of Dacca, for the celebration of marriages and the performance of other rites and ceremonies, when application is made to him to perform any such functions.

Dacca.

C. E. BUCKLAND,
Chief Secy. to the Govt. of Bengal.

PUBLIC WORKS DEPARTMENT.

ESTABLISHMENT.

The 8th July 1902.

No. 145.—The following notification issued by the Government of India in the Public Works Department is republished for information :—

No. 228, dated the 2nd July 1902.—With reference to Public Works Department Notification No 210, dated 18th June 1902, Mr. C. A. White, Executive Engineer, first grade, Bengal, is appointed to officiate as Superintending Engineer, with effect from the forenoon of 21st June 1902, or until further orders.

No. 146.—With reference to the Government of India, Public Works Department Notification No. 228, dated the 2nd July 1902, Mr. C. A. White is appointed to officiate as the Superintending Engineer of the Orissa Circle, with effect from the forenoon of the 21st June 1902, or until further orders.

No. 147.—The Lieutenant-Governor is pleased to make the following promotions in the Engineer Establishment with effect from the dates specified:—

NAMES.	From—	To—	With effect from—	Nature of promotion
Sibold, C. W. ...	Assistant Engineer, 1st grade.	Executive Engineer, 3rd grade.	2nd April 1902 ...	Temporary.
Pal, Saroda Sunder ...	Ditto ...	Ditto ...	18th „ „ ...	Ditto.

D. B. HORN,
Offg. Secy. to the Govt. of Bengal.

CIVIL BUILDINGS.

The 8th July 1902.

No. 143.—Declaration.—Whereas it appears to the Lieutenant-Governor of Bengal that land is required to be taken by Government at the public expense for a public purpose viz., for constructing a third class mortuary building in the village of Jahanabad, pargana Bhelamar, zilla Gaya, it is hereby declared that for the above purpose a piece of land measuring, more or less, 7 cottahs 6 dhurs of local measurement, bounded as follows:—

Plot 1.—On all sides by Bengali Koeri's land,

Plot 2.—On the east, north and south by Bengali Koeri's land, and on the west by a bund,

Plot 3.—On the east, north and south by Bengali Koeri's land, and on the west by a bund,

is required within the aforesaid village of Jahanabad.

Mines of coal, iron-stone, slate or other minerals lying under the land, or any particular portion of the land, except only such parts of the mines and minerals as it may be necessary to dig or carry away or use in the construction of the work for the purpose of which the land is being acquired, are not needed.

This declaration is made, under the provisions of section 6, Act I of 1894, and section 3, clause (1), Act XVIII of 1885, to all whom it may concern.

A plan of the land may be inspected in the office of the Executive Engineer, Eastern Sone Division, at Bankipore.

No. 144 Declaration.—Whereas it appears to the Lieutenant-Governor of Bengal that land is required to be taken by Government at the public expense for a public purpose, viz., for the extension of the European cemetery at Comilla, in the village of Chhotora, pargana Meherkul, zilla Tippera, it is hereby declared that for the above purpose a piece of land measuring, more or less, 8 cottahs of standard measurement, bounded on the north by the road leading to the European cemetery, south and west by the land of Ahmed Ali and Amjad Ali, and east by the European cemetery, is required within the aforesaid village of Chhotora.

This declaration is made, under the provisions of section 6 of Act I of 1894, to all whom it may concern.

A plan of the land may be inspected in the office of the Collector of Tippera.

W. A. INGLIS,
Offg. Secy. to the Govt. of Bengal.

IRRIGATION DEPARTMENT.

The 8th July 1902.

No. 148.—Declaration—Whereas it appears to the Lieutenant-Governor of Bengal that land is required to be taken by Government at the public expense for a public purpose, viz., for extension of No. 4 Distributary, Pattamoondi Canal, in the village of Adommohesarpoor, pargana Matkodnagar, zilla Cuttack, it is hereby declared that for the above purpose a piece of land measuring, more or less, 3 roods 13·9 poles of standard measurement, bounded on the north, south and west by cultivated and waste lands of mauza Adommohesarpoor, and on the east by No. 4 Distributary, Pattamoondi Canal, is required within the aforesaid village of Adommohesarpoor.

This declaration is made, under the provisions of section 6 of Act I of 1894, to all whom it may concern.

A plan of the land may be inspected in the office of the Land Acquisition Officer, Irrigation Branch, Cuttack.

No. 149.—Declaration.—Whereas it appears to the Lieutenant-Governor of Bengal that land is required to be taken by Government at the public expense for a public purpose, viz., for a minor distributary from No. 15A Branch, Pattamoondi Canal, in the villages of Dakhindia and Beltal, parganas Ootiken and Tiken, zilla Cuttack, it is hereby declared that for the above purpose a piece of land measuring, more or less, 3 roods 1·3 poles of standard measurement, bounded on the north and south by the cultivated and waste lands of mauzas Dakhindia and Beltal, on the west by the cultivated lands of mauza Beltal, and on the east by No. 15A Branch Distributary, Pattamoondi Canal, is required within the aforesaid villages of Dakhindia and Beltal.

This declaration is made, under the provisions of section 6 of Act I of 1894, to all whom it may concern.

A plan of the land may be inspected in the office of the Land Acquisition Officer, Irrigation Branch, Cuttack.

No. 150.—Notification.—In supersession of this Department Notification No. 133, dated the 9th July 1900, the Hon'ble the Lieutenant-Governor of Bengal proposes, under section 6 of Act V (B.C.) of 1864, to levy tolls at the undermentioned rates and place on all steamers, flats, country boats, &c, plying in the new Madaripur bhil route between the rivers Kumar and Madhumati, with effect from the 16th July 1902:—

I.—Schedule of Tolls.

	Description of vessels.	Rate.
		Rs. A.
1.	On all steamers, per ton, on the gross tonnage ...	0 4
2.	On cargo carried on steamers or on flats, per 100 maunds...	2 0
3.	On steamers plying to or from Naraingunge, per ton on the gross tonnage	0 2
4.	On flats plying to or from Naraingunge, per 100 maunds...	1 0
5.	On all cargo and passenger boats, per 100 maunds ...	0 8
6.	On floats of timber, each timber	0 3
7.	On rafts of bamboos, for each hundred or portion of each hundred	0 4
8.	Minimum toll on all boats	0 1
9.	*Excess tolls.*—Vessels which are passing through the route, and which enter either empty or partially loaded, shall be liable to pay excess tolls at the above rates, if their tonnage by canal measurement is greater on leaving the route than when they entered it.	
10.	*Demurrage.*—Boats will ordinarily be allowed three days in which to make the passage of the route. Demurrage at the rate of half the toll paid will be levied per diem on all boats which remain in the channel longer than three days, subject to a maximum of Rs. 5 per diem.	

II.—Place where tolls are to be levied.

Jolirpar in the 18th mile from the Madhumati river and the 4th mile from the Kumar river.

NOTE.—In the case of steamers and flats belonging to the India General Navigation and Railway Company and the Rivers Steam Navigation Company the gross tonnage of the steamers shall be taken from the steamer's certificate and the amount of cargo carried from the vessel's manifest.

D. B. HORN,
Offg. Secy. to the Govt. of Bengal.

RAILWAY DEPARTMENT.

The 8th July 1902.

No. 145R.—Declaration.—Whereas it appears to the Lieutenant-Governor of Bengal that land is required to be taken by Government at the public expense for a public purpose viz., for the extension of the Poteepooker yard of the Bengal Central Railway, in the village of Poteepooker, subdivision Baraset, zilla 24-Parganas, it is hereby declared that for the above purpose a piece of land measuring, more or less, 7·96 acres of standard measurement, bounded on the north by the Jessore road and acquired land of Bengal Central Railway, on the south by the homestead land of P. N. Mitra, Esq., Maharaja Nabakrishna, Babus Anath Nath Deb and Rajendra Chandra Dey, on the east by the Dakkhindhary road, paddy land of Messrs. Syamballabh & Co., and on the west by the land of Eastern Bengal State Railway is required within the aforesaid village of Poteepooker.

This declaration is made, under the provisions of section 6 of Act I of 1894, to all whom it may concern.

A plan of the land may be inspected in the office of the Agent and Chief Engineer Bengal Central Railway, at No. 159-1 Bowbazar Street, Calcutta.

No. 146R.—Declaration.—Whereas it appears to the Lieutenant-Governor of Bengal that land is required to be taken by Government at the public expense for a public purpose, viz., for East Indian Railway Company's additions and alterations at Khana Junction Station, in the village of Sathnundee, tahsil Gobbhoom, district Burdwan, it is hereby declared that for the above purpose two plots of land measuring, more or less, 6 bighas 11 cottahs and 9 chitaks of standard measurement (corresponding to 2·18 acres), bounded as stated below:—

Plot No. 1 (2 bighas 8 cottahs 4 chitaks).—On the north by the cultivated land of Kali Kumar Koondu and Sritidhar Roy, on the south by the cutting of Kali Kumar Koondu, Sritidhar Roy, and by the East Indian Railway Company's land, on the east by the cultivated and waste lands of Sritidhar Roy and cutting of Kali Kumar Koondu, and on the west by the cutting and cultivated lands of Kali Kumar Koondu,

Plot No. 2 (4 bighas 3 cottahs 5 chitaks).—On the north by the waste and cultivated lands of Kali Kumar Koondu, on the south by the cutting of Kali Kumar Koondu and by the East Indian Railway Company's land, and on the east and west by the cultivated and waste lands of Kali Kumar Koondu,

are required within the aforesaid village of Sathnundee.

Mines of coal, iron-stone, slate or other minerals lying under the land, except only such parts of the mines and minerals as it may be necessary to dig or carry away or use in the construction of the work for the purpose for which the land is being acquired, are not needed.

This declaration is made, under the provisions of section 6, Act I of 1894, and section (3), clause I, Act XVIII of 1885, to all whom it may concern.

A plan of the land may be inspected in the office of the Land Acquisition Deputy Collector of Burdwan, and in that of the District Engineer, East Indian Railway, at Howrah.

No. 147R.—Declaration.—Whereas it appears to the Lieutenant-Governor of Bengal that land is required to be taken by Government at the public expense for a public purpose, viz., for the new transhipment ghat at Lalgola, in the village of Gopalbaree, pargana Kassimnagore, zilla Faridpur, it is hereby declared that for the above purpose a piece of land measuring, more or less, 18 acres 24·9 poles of standard measurement, being a portion of the land temporarily occupied in 1896, bounded on the north by the river Ganges, on the west partly by the Eastern Bengal State Railway and partly by village Gopalbaree, and on the south and east by the village of Gopalbaree, is required within the aforesaid village of Gopalbaree.

This declaration is made, under the provisions of section 6, Act I of 1894, to all whom it may concern.

A plan of the land is available for inspection in the office of the Executive Engineer, Rajbari District, Eastern Bengal State Railway.

W. A. INGLIS,
Offg. Secy. to the Govt. of Bengal.

MARINE DEPARTMENT.

The 4th July 1902.

No. 89Marine.—The Lieutenant-Governor is pleased to appoint Mr. C. A. Tweeddale, Accountant and Bonding Supervisor, Calcutta Custom House, to officiate as Inspector of Antiscorbutics in the Port of Calcutta, during the absence, on leave, of Mr. H. Bradbury, or until further orders, with effect from the 29th May 1902.

D. B. HORN,
Offg. Secy. to the Govt. of Bengal.

The 5th July 1902.

No. 90Marine.—The following telegram No. 1632—1652Sanitary, dated the 5th July 1902, from the Government of India, intimating that the town and port of Bhabanagar, in the Bombay Presidency, is free from plague, is published for general information, in continuation of this Department Notification No. 31Marine, of the 18th February 1902.

D. B. HORN,
Offg. Secy. to the Govt. of Bengal.

Copy of a telegram No. 1632—1652Sanitary, dated the 5th July 1902, from the Government of India, Home Department, to the Government of Bengal, Marine Department.

My endorsement of 12th February last. Bhabanagar port and town free from plague. Last plague case occurred 21st April last.

The 8th July 1902.

No. 91Marine.—Mr. E. P. Bryant, Junior Master Pilot, is granted, under article 746 (*a*) of the Civil Service Regulations, privilege leave for two months and 29 days, with effect from the 12th instant, or such subsequent date as he may avail himself of it.

D. B. HORN,
Offg. Secy. to the Govt. of Bengal.

SUBORDINATE CIVIL SERVICE.

No. 3039A.

No. 1752A.D.—The 4th July 1902.—Babu Komul Narain Chuckerbutty, Sub-Deputy Collector, on leave, is appointed to be Tahsildar of Patiya, in the district of Chittagong.
Chittagong.

No. 1804A.D.—The 5th July 1902.—Babu Hori Mohun Dutta, Sub-Deputy Collector, Dacca, is transferred temporarily to the head-quarters station of the district of Backergunge.
Dacca.
Backergunge.

No. 1816A.D.—The 7th July 1902.—Babu Hari Nath Pramanik, substantive *pro tempore* Sub-Deputy Collector, Monghyr, is transferred to the Jamtara subdivision of the Sonthal Parganas district.
Monghyr.
Sonthal Parganas.

No. 1818A.D.—The 7th July 1902.—Babu Mathura Nath Banerjee, Sub-Deputy Collector, Jamtara, Sonthal Parganas, is transferred to the Pakaur subdivision of that district.
Sonthal Parganas.

No. 1820A.D.—The 7th July 1902.—Babu Himangsu Nath Chakravarti, Sub-Deputy Collector, Pakaur, Sonthal Parganas, is transferred to the head-quarters station of the district of Purnea.
Sonthal Parganas.
Purnea.

No. 1822A.D.—The 7th July 1902.—Babu Balaram Das Gupta, Sub-Deputy Collector, Sonthal Parganas, is transferred to the head-quarters station of the district of Monghyr.
Sonthal Parganas.
Monghyr.

No. 1837A.D.—The 5th July 1902.—Babu Balaram Das Gupta, Sub-Deputy Collector, is posted to the head-quarters station of the Sonthal Parganas district, and is vested with the powers of a Magistrate of the third class, on being relieved of his settlement duties in that district.
Sonthal Parganas.

C. E. BUCKLAND,
Chief Secy. to the Govt. of Bengal.

REGISTRATION DEPARTMENT.

No. 1775A.D.—The 5th July 1902.—Maulvi Ashraf Ali is appointed to act as Rural Sub-Registrar of Bamni, in the district of Noakhali, during the absence, on deputation, of Maulvi Abdul Halim, or until further orders.
Noakhali.

No. 1794A.D.—The 5th July 1902.—Babu Dhanesh Chandra Sen is appointed to act as Rural Sub-Registrar of Kalia Chak, in the district of Malda, during the absence, on deputation, of Babu Jugal Krishna Ray, or until further orders.
Malda.

No. 842P.D.—The 5th July 1902.—Babu Upendra Nath Ghose, Joint Sub-Registrar of Salkopa at Harisankarpur, in the district of Jessore, is appointed to be Rural Sub-Registrar of Ramnagar, in the district of Midnapore, *vice* Babu Mathura Nath Das, about to retire.
Jessore.
Midnapore.

C. E. BUCKLAND,
Chief Secy. to the Govt. of Bengal.

JAIL DEPARTMENT.

No. 8142, dated Calcutta, the 3rd July 1902.—Lieutenant A. W. Greig, I.M.S., made over charge of the Ranchi Jail to Captain R. H. Maddox, I.M.S., on the afternoon of the 28th June 1902.

No. 8264, dated Calcutta, the 8th July 1902.—Major W. J. Buchanan, I.M.S., made over charge of the Alipore Central Jail to Mr. M. S. Emerson on the forenoon of the 2nd July 1902.

M. S. EMERSON,
for *Inspector-General of Jails, Bengal.*

CIVIL MEDICAL DEPARTMENT, BENGAL.

No. 1946D., dated the 5th July 1902.—Assistant Surgeon Surendra Nath Mukherjee did supernumerary duty at the Medical College Hospital, Calcutta, from the forenoon of the 10th February to the afternoon of the 17th March 1902.

No. 1949D., dated the 5th July 1902.—Assistant Surgeon Surendra Nath Mukherjee acted at the Siliguri Subdivision and Dispensary, in the Darjeeling district, from the forenoon of the 18th March to the afternoon of the 30th May 1902, during the absence, on deputation, of Assistant Surgeon Mohendra Kumar Chakravarti.

No. 1952D., dated the 5th July 1902.—Assistant Surgeon Surendra Nath Mukherjee is appointed to act at the Ghatal Subdivision and Dispensary, in the Midnapore district, with effect from the forenoon of the 9th June 1902, during the absence, on leave, of Assistant Surgeon Mohendra Nath Das, or until further orders.

T. H. HENDLEY, COL., I.M.S.,
Inspector-General of Civil Hospitals, Bengal.

TREASURY NOTICES.

UNCOVENANTED DEPUTY COLLECTOR BABU JOGENDRA NATH BANDAPADHYA is hereby placed in charge of the Midnapore Treasury, *vice* Deputy Collector Babu Narendra Kumar Chaudhuri, with retrospective effect from the 9th June 1902, and is authorized to draw bills on other Treasuries.

R. CARSTAIRS, *Commissioner.*

COMMR.'S OFFICE, BURDWAN DIVN., CHINSURA, *the 1st July 1902.*

UNCOVENANTED DEPUTY COLLECTOR BABU TULSI CHARAN PAL has been placed in charge of the Singhbhum Treasury, with effect from the afternoon of the 13th May 1902, and is authorised to draw bills on other Treasuries.

KRISHNAKALI MUKHARJI, *Persl. Asst.*, for *Offg. Commr.*

COMMR.'S OFFICE, RANCHI, *the 5th July 1902.*

HIGH COURT NOTICE.

Dates of the 4th and 5th Criminal Sessions for the year 1902.

No. of Sessions.	Day of the week	Date.
Fourth Sessions	... Monday	... August 18th.
Fifth Do.	... Do.	... December 1st.

By order,
J. G. APCAR, *Clerk of the Crown.*

HIGH COURT, CROWN OFFICE, *the 25th day of June 1902.*

SMALL CAUSE COURT NOTICE.

NOTICE is hereby given, under section 7 of Act IX of 1887, that the Judge of the Small Cause Courts of Dacca and Munshigunge will, in the month of August 1902, sit in those Courts on the undermentioned dates, Sundays and holidays excepted:—

Dacca Small Cause Court ... 1st, 2nd, 6th, 7th, 25th and 30th of August 1902.
Munshigunge Small Cause Court .. From the 18th to the 23rd of August 1902.

SRINATH PAL, *Judge, Small Cause Court.*

DACCA SMALL CAUSE COURT, *the 3rd July 1902.*

EDUCATION DEPARTMENT, BENGAL.

Subordinate Educational Service.

The 21st June 1902.—Consequent on the appointment, on probation for six months, of Babu Soma Nath Jharkhandi, B.A., Deputy Inspector of Schools, Patna, to be Urdu and Hindi Translator to Government, the following arrangements are sanctioned :—

(1) Babu Baldev Misra, B.A., Deputy Inspector of Schools, Shahabad (class III), to be substantive *pro tempore* Deputy Inspector of Schools, Patna, *vice* Babu Soma Nath Jharkhandi.

(2) Babu Sripati Mukherjea, B.A., Deputy Inspector of Schools, Muzaffarpur (class III), to be substantive *pro tempore* Deputy Inspector of Schools, Shahabad, *vice* Babu Baldev Misra.

(3) Babu Bhagwat Narayan, Sub-Inspector of Schools, Muzaffarpur (class VII), to be substantive *pro tempore* Deputy Inspector of Schools, Muzaffarpur, *vice* Babu Sripati Mukherjea.

Babu Bhagwat Narayan is also appointed to be substantive *pro tempore* in class VI in the resulting vacancy consequent on the appointment of Babu Soma Nath Jharkhandi to be Urdu and Hindi Translator to Government.

The 27th June 1902.—Consequent on the retirement on the 1st July next of Babu Adi Nath Mittra, Deputy Inspector of Schools, Rajshahi, the following arrangements are sanctioned :—

(1) Babu Bhubaneswar Gupta, Deputy Inspector of Schools, Faridpur (class II), to be Deputy Inspector of Schools, Rajshahi, *vice* Babu Adi Nath Mittra, to retire.

(2) Maulvi Kabiruddin Ahmad, B.A., Additional Deputy Inspector of Schools, Faridpur (class IV), to be Deputy Inspector of Schools, Faridpur *vice*, Babu Bhubaneswar Gupta, transferred.

(3) Babu Sarada Prasad Banerjea, Sub-Inspector of Schools, Midnapore (class V), to be Additional Deputy Inspector of Schools, Faridpur, on probation for six months, *vice* Maulvi Kabiruddin Ahmad, transferred.

Consequent on the retirement on the 1st July next of Babu Tarak Bandhu Chakravarti, Deputy Inspector of Schools, Tippera, the following arrangements are sanctioned :—

(1) Babu Akrur Chandra Sen, Deputy Inspector of Schools, Chittagong (class V), to be Deputy Inspector of Schools, Tippera, *vice* Babu Tarak Bandhu Chakravarti, to retire.

(2) Maulvi Matloob Ahmed Khan Choudhury, M.A., Additional Deputy Inspector of Schools, Dacca (class V), to be Deputy Inspector of Schools, Chittagong, *vice* Babu Akrur Chandra Sen, transferred.

(3) Maulvi Enayet Karim, B.A., an Assistant Master in the Anglo-Persian Department of the Calcutta Madrasah (class IV), to be Additional Deputy Inspector of Schools, Dacca, *vice* Maulvi Matloob Ahmed Khan Choudhury, transferred

The 29th June 1902.—Babu Siva Sankar Lal, Sub-Inspector of Schools, Palamau (class VII), is appointed to act as Deputy Inspector of Schools, Palamau, during the absence, on leave, of Babu Kalikananda Mukherjea, or until further orders.

This cancels the orders of the 15th May 1902, appointing Babu Bonimadhab Datta, B.A., then Officiating Sub-Inspector of Schools, 2nd Circle, Palamau, to act as Deputy Inspector of Schools in that district.

The 30th June 1902.—Babu Harivar Mittra, a Sub-Inspector of Schools under the District Board of Dinajpur (class VII), has been granted by the Board privilege leave for one month, with effect from the 10th June 1902.

The following arrangements are sanctioned consequent on the retirement, with effect from the 1st July 1902, of Babu Raj Kumar Lal, Assistant Head Master of the Chapra Zilla School :—

(1) Babu Sital Prasad, B.A., an Assistant Master in the Chapra Zilla School (class VIII), is appointed to be Assistant Head Master of the same institution, on the pay of his own grade, *vice* Babu Raj Kumar Lal.

(2) Maulvi Abul Hashem, M.A., is appointed, on probation for six months, to be an Assistant Master in the Chapra Zilla School, *vice* Babu Sital Prasad, and substantively *pro tempore* to class VIII, in the resulting vacancy consequent on the retirement of Babu Raj Kumar Lal.

The 1st July 1902.—Babu Manmohan Chakravarti, B.A., Assistant Head Master of the Jessore Zilla School (class VI), now under training at the Kurseong Training College, is appointed to be Assistant Head Master of the Calcutta Training School, on the pay of his own grade.

Babu Debendra Kumar Ray, M.A., Head Master, Chittagong Collegiate School (class IV), now under training at the Kurseong Training College, is appointed to be Assistant Head Master of the Patna Training School, on the pay of his own grade.

Babu Beni Madhab Das, M.A., Assistant Head Master of the Dacca Training School (class V), is appointed to be Assistant Head Master of the Chittagong Training School, on the pay of his own grade.

Babu Atul Chandra Banerjea, M.A., Assistant Master, Chapra Zilla School (class VI), now under training at the Kurseong Training College, is appointed to be Assistant Head Master of the Dacca Training School, on the pay of his own grade, *vice* Babu Beni Madhab Das, transferred.

Babu Upendra Narayan Datta Gupta, B.A., Assistant Master, Balasore Zilla School (class VI), now under training at the Kurseong Training College, is appointed to be an Assistant Master in the Cuttack Training School, on the pay of his own grade.

Babu Bijay Krishna Bose, M.A., Assistant Head Master of the Rangpur Zilla School (class VI), now under training at the Kurseong Training College, is appointed to be an Assistant Master in the Dacca Training School, on the pay of his own grade.

Babu Sarat Chandra Brahmachari, M.A., Deputy Inspector of Schools, Champaran (class V), is allowed leave of absence for fifteen days, under Article 291 of the Civil Service Regulations, in continuation of the leave granted to him under the orders of the 24th April 1902.

The 2nd July 1902.—Babu Durga Das Sur, a Sub-Inspector of Schools under the District Board of Burdwan, was granted by the Board leave on private affairs from the 1st to the 30th March 1902, both days inclusive.

The 5th July 1902.—The following arrangements are sanctioned, with effect from the 16th July 1902, consequent on the retirement of Babu Rajani Kanta Ghosh, Assistant Head Master of the Dacca Collegiate School:—

(1) Babu Raj Kumar Das, M.A., Head Master of the Dinajpur Zilla School, and no Officiating Deputy Inspector of Schools, Dacca (class III), is appointed to be Assistant Head Master of the Dacca Collegiate School, on the pay of his own grade, *vice* Babu Rajani Kanta Ghosh.

(2) Babu Bharat Bandhu Laha, M.A., an Assistant Master in the Dacca Collegiate School (class IV), is appointed to be Head Master of the Dinajpur Zilla School, on the pay of his own grade, *vice* Babu Raj Kumar Das, transferred.

A. PEDLER,
Director of Public Instruction, Bengal.

NOTIFICATION.

The 29th June 1902.—The following confirmations, promotions, and appointments in the Subordinate Educational Service are sanctioned:—

Maulvi Ahsanulla, M.A., Deputy Inspector of Schools, Backergunge, with effect from the 1st January 1902, *vice* Maulvi Mahmud, confirmed in Class II.

Maulvi Abul Maqsud, B.A., Deputy Inspector of Schools, Khulna, with effect from the 7th February 1902, *vice* Babu Rakhal Das Chakravarti, promoted to Class II.

Babu Satkari Chandra Ghosh, B.A., Head Master, Birbhum Zilla School, with effect from the 9th February 1902, *vice* Babu Lok Nath Chakravarti, promoted to Class II.

Mr. A. D'Silva, Superintendent, Ranchi Industrial School, with effect from the 20th April 1902, *vice* Babu Bhagavati Sahay, appointed to the Provincial Educational Service.

Promoted to Class III.

Maulvi Enayet Karim, B.A., Additional Deputy Inspector of Schools, Dacca, with effect from the 1st July 1902, *vice* Babu Hem Chandra Banerjea, to retire.

Promoted substantively pro tempore *to Class III.*

Maulvi Enayet Karim, B.A., Additional Deputy Inspector of Schools, Dacca, with effect from the 7th February 1902, *vice* Maulvi Abul Maqsud.

Babu Prasanna Kumar Mazumdar, Deputy Inspector of Schools, Noakhali, with effect from the 9th February 1902, *vice* Babu Satkari Chandra Ghosh.

Babu Kali Kumar Ganguli, Assistant, Office of the Director of Public Instruction, with effect from the 20th April 1902, *vice* Mr. A. D'Silva.

Babu Basanta Kumar Das, B.A., Head Master, Rangpur Zilla School, with effect from the 9th June 1902, *vice* Babu Sama Nath Jharkandi, appointed sub. *pro tem.* Hindi and Urdu Translator to Government.

Babu Tarini Kisor Bardhan, Deputy Inspector of Schools, Rangpur, with effect from the 1st July 1902, *vice* Maulvi Enayet Karim.

Confirmed in Class IV.

Babu Kedar Nath Das Gupta, B.A., Head Master, Khulna Zilla School, with effect from the 15th January 1902, *vice* Maulvi Ahsanulla.

Babu Giriwardhari Lal, Deputy Inspector of Schools, Darbhanga, with effect from the 7th February 1902, *vice* Maulvi Abul Maqsud.

Babu Radhika Prasad Lahery, Clerk and Deputy Keeper, Government Art Gallery, with effect from the 9th February 1902, *vice* Babu Satkari Chandra Ghosh.

Pandit Pramatha Nath Tarkabhushan, Lecturer, Sanskrit College, with effect from the 25th March 1902, *vice* Babu Satis Chandra Acharjea, appointed to the Provincial Educational Service.

Babu Kali Narayan Sen, B.E., Lecturer, Civil Engineering College, Sibpur, with effect from the 20th April 1902, *vice* Mr. A. D'Silva.

Promoted to Class IV.

Babu Jadu Nath Chaudhuri, Deputy Inspector of Schools, Jalpaiguri, with effect from the 1st July 1902, *vice* Maulvi Enayet Karim.

Maulvi Abdul Hai, Assistant Master (Head Maulvi), Patna Collegiate School, with effect from the 1st July 1902, *vice* Babu Raj Kumar Lal, to retire.

Promoted substantively pro tempore *to Class IV.*

Babu Jadu Nath Chaudhuri, Deputy Inspector of Schools, Jalpaiguri, with effect from the 7th February 1902, *vice* Babu Giriwardhari Lal.

Maulvi Abdul Hai, Assistant Master (Head Maulvi), Patna Collegiate School, with effect from the 9th February 1902, *vice* Babu Radhika Prasad Lahery.

Babu Krishna Lal Chatterjee, Assistant Master (Drawing Master), Hare School, with effect from the 25th March 1902, *vice* Pandit Pramatha Nath Tarkabhushan.

Babu Raksha Kali Sil, Head Clerk, Calcutta Madrasah, with effect from the 20th April 1902, *vice* Babu Kali Narayan Sen.

Babu Gopi Bhusan Sen, B.A., Senior Assistant, Chemical Laboratory, Presidency College, with effect from the 9th June 1902, *vice* Babu Basanta Kumar Das.

Babu Jadub Chandra Chuckerbutty, Teacher of the Elementary Painting class, Government School of Art, with effect from the 1st July 1902, *vice* Babu Jadu Nath Chaudhuri.

Babu Trisuldhari Sinha, Assistant Head Master, Matihari Zilla School, and now Officiating Deputy Inspector of Schools, Singhbhum, with effect from the 1st July 1902, *vice* Maulvi Abdul Hai.

Confirmed in Class V.

Babu Bhuban Mohan Sen, Assistant Head Master, Mymensingh Zilla School, with effect from the 15th January 1902, *vice* Babu Kedar Nath Das Gupta.

Babu Man Mohan Chandra, B.A., Assistant Master, Birbhum Zilla School, with effect from the 9th February 1902, *vice* Babu Radhika Prasad Lahery.

Babu Bisveswar Ghosh, Sub-Inspector of Schools, Sonthal Parganas, with effect from the 20th March 1902, *vice* Maulvi S. M. Khalil Ahmed, resigned.

Babu Subal Krishna Das, Assistant Master, Hindu School, with effect from the 25th March 1902, *vice* Pandit Pramatha Nath Tarkabhushan.

Babu Mathura Prasad, Assistant Head Master, Arrah Zilla School, with effect from the 19th April 1902, *vice* Babu Mahendra Nath Sil, deceased.

Promoted to Class V.

Babu Rames Chandra Das, B.A., Sub-Inspector of Schools, Tippera, with effect from the 3rd February 1902, *vice* Babu Bhagwan Chandra Sanyal, retired.

Babu Govinda Chandra Chakravarti, B.A., Sub-Inspector of Schools, Chittagong, with effect from the 1st March 1902, *vice* Babu Govinda Chandra Datta, retired.

Babu Hari Charan Mukherjea, Sub-Inspector of Schools, Jessore, with effect from the 3rd March 1902, *vice* Babu Akrur Chandra Sen, retransferred to the Department and appointed to be Deputy Inspector of Schools, Chittagong.

Babu Phatik Chandra Chakravarti, B.A., Assistant Head Master, Rajshahi Collegiate School, with effect from the 20th April 1902, *vice* Babu Kali Narayan Sen.

Babu Ashutosh Banerjea, Clerk, Civil Engineering College, Sibpur, with effect from the 1st July 1902, *vice* Babu Jadu Nath Chaudhuri.

Babu Man Mohan Chakravarti, B.A., Assistant Head Master, Jessore Zilla School, under training at the Kurseong Training College, with effect from the 1st July 1902, *vice* Maulvi Abdul Hai.

Promoted substantively pro tempore *to Class V.*

Babu Phatik Chandra Chakravarti, B.A., Assistant Head Master, Rajshahi Collegiate School, with effect from the 15th January 1902, *vice* Babu Revati Ram Ray, *seconded.*

Babu Ashutosh Banerjea, Clerk, Civil Engineering College, Sibpur, with effect from the 9th February 1902, *vice* Babu Man Mohan Chandra.

Babu Man Mohan Chakravarti, B.A., Assistant Head Master, Jessore Zilla School, under training at the Kurseong Training College, with effect from the 20th March 1902, *vice* Babu Bisveswar Ghosh.

Mr. J. Jones, Assistant, Office of the Director of Public Instruction, with effect from the 25th March 1902, *vice* Babu Subal Krishna Das.

Babu Barada Kanta Datta, Teacher of Advanced Free Hand, Government School of Art with effect from the 19th April 1902, *vice* Babu Mathura Prasad.

Babu Jogendra Lal Sinha, Librarian, Presidency College, with effect from the 20th April 1902, *vice* Babu Phatik Chandra Chakravarti.

Babu Brajendra Nath Ghosal, Assistant Master (Head Pandit), Hare School, with effect from the 9th June 1902, *vice* Babu Gopi Bhusan Sen.

Pandit Krishna Pada Vidyaratna, Lecturer on Sanskrit, Hooghly College, with effect from the 1st July 1902, *vice* Babu Ashutosh Banerjea.

Maulvi Muhammad Ismail, Lecturer on Arabic and Persian, Ravenshaw College, Cuttack, with effect from the 1st July 1902, *vice* Babu Man Mohan Chakravarti.

Confirmed in Class VI.

Babu Kedar Nath Ghosh, Assistant Master (Head Pandit), Hindu School, with effect from the 15th January 1902, *vice* Babu Bhuban Mohan Sen.

Babu Pramatha Nath Raya, Clerk of the Victoria Training College and School and the Dow Hill Girls' School, Kurseong, with effect from the 9th February 1902, *vice* Babu Man Mohan Chandra.

Miss Ida D'Cruz, B.A., Assistant Mistress, Dow Hill Girls' School, Kurseong, with effect from the 20th March 1902, *vice* Babu Bisveswar Ghosh.

Miss Jessie Russell, Assistant Mistress, Dow Hill Girls' School, Kurseong, with effect from the 25th March 1902, *vice* Babu Subal Krishna Das.

Babu Braja Ballav Ghosh, Head Clerk, Office of the Inspector of Schools, Orissa Division, with effect from the 19th April 1902, *vice* Babu Mathura Prasad.

Babu Mahendra Nath Lahiri, Assistant Master, Krishnagar Collegiate School, with effect from the 20th April 1902, *vice* Babu Phatik Chandra Chakravarti.

Babu Basanta Kumar Mitra, B.A., Assistant Head Master, Eden Female School, Dacca, with effect from the 1st July 1902, *vice* Babu Ashutosh Banerjea.

Promoted to Class VI.

Babu Brajendra Chandra Ghosh, Sub-Inspector of Schools, Malda, with effect from the 1st February 1902, *vice* Babu Sidheswar Banerjea, deceased.

Babu Mathura Nath Guha, Sub-Inspector of Schools, Mymensingh, with effect from the 3rd February 1902, *vice* Babu Rames Chandra Das.

Babu Harivar Mitra, Sub-Inspector of Schools, Dinajpur, with effect from the 1st March 1902, *vice* Babu Govinda Chandra Chakravarti.

Babu Sarada Prasad Ghosh, Sub-Inspector of Schools, Pabna, with effect from the 3rd March 1902, *vice* Babu Hari Charan Mukherjea

Babu Raj Kumar Sen, Sub-Inspector of Schools, Cuttack, with effect from the 29th May 1902, *vice* Babu Mahabir Prasad, deceased.

Muhammad Fazlul Karim, Head Maulvi, Arabic Department, Dacca Madrasah, with effect from the 1st July 1902, *vice* Babu Man Mohan Chakravarti.

Babu Hari Charan Chatterjea, Head Clerk, Office of the Inspector of Schools, Burdwan Division, with effect from the 1st July 1902, *vice* Babu Pran Krishna Banerjea, to retire.

Promoted substantively pro tempore *to Class VI.*

Maulvi Muhammad Fazlul Karim, Head Maulvi, Arabic Department, Dacca Madrasah, with effect from the 15th January 1902, *vice* Babu Phatik Chandra Chakravarti.

Babu Hari Charan Chatterjea, Head Clerk, Office of the Inspector of Schools, Burdwan Division, with effect from the 9th February 1902, *vice* Babu Pramatha Nath Raya.

Miss Mary Haughton, Assistant Mistress, Dow Hill Girls' School, Kurseong, with effect from the 20th March 1902, *vice* Miss Ida D'Cruz.

Miss Jessie D'Souza, Assistant Mistress, Dow Hill Girls' School, Kurseong, with effect from the 25th March 1902, *vice* Miss Jessie Russell.

Babu Ram Chandra Maitra, B.A., Assistant Head Master, Chaibassa Zilla School, with effect from the 19th April 1902, *vice* Babu Braja Ballav Ghosh.

Babu Satis Chandra Sen, B.A., Assistant Master, Dacca Collegiate School, with effect from the 20th April 1902, *vice* Babu Mahendra Nath Lahiri.

Babu Atul Chandra Ganguli, B.A., Assistant Master, Hooghly Collegiate School, and now sub. *pro tem.* Junior Assistant, Chemical Laboratory, Presidency College, with effect from the 1st July 1902, *vice* Babu Basanta Kumar Mitra.

Miss Eleaner Phillips, Assistant Mistress, Dow Hill Girls' School, with effect from the 1st July 1902, *vice* Maulvi Muhammad Fazlul Karim.

Babu Kedar Nath Kulavi, Assistant Head Master, Bankura Zilla School, with effect from the 1st July 1902, *vice* Babu Hari Charan Chatterjea.

Confirmed in Class VII.

Babu Jnanendra Nath Mitra, B.A., Assistant Master, Jessore Zilla School, and sub *pro tem.* Assistant Head Master, Khulna Zilla School, with effect from the 15th January 1902, *vice* Babu Kedar Nath Ghosh.

Babu Mati Lal Banerjea, B.A., Assistant Master, Bhagalpur Zilla School, with effect from the 9th February 1902, *vice* Babu Pramatha Nath Raya.

Babu Nil Madhab Barik, B.A., Assistant Master, Dumka Zilla School, with effect from the 16th March 1902, *vice* Babu Abhiram Bhanj, resigned.

Babu Kanti Chandra Ghosh Hazra, B.A., Assistant Head Master, Hooghly Branch School, with effect from the 20th March 1902, *vice* Miss Ida D'Cruz.

Babu Suraj Mohan Ray, B.A., Head Master, Taki Government School, with effect from the 25th March 1902, *vice* Miss Jessie Russell.

Babu Kali Prasanna Banerjea, B.A., Assistant Head Master, Barasat Government School, with effect from the 19th April 1902, *vice* Babu Braja Ballav Ghosh

Promoted to Class VII.

Pandit Raj Kumar Tarkaratna, Assistant Master (Head Pandit), Bhagalpur Zilla School, with effect from the 20th April 1902, *vice* Babu Mahendra Nath Lahiri.

Babu Srish Chandra Ray, B.A., Head Clerk, Rajshahi College, with effect from the 1st July 1902, *vice* Babu Basanta Kumar Mitra.

Babu Sarat Chandra Mukherjea, Head Clerk, Hooghly College, with effect from the 1st July 1902, *vice* Maulvi Muhammad Fazlul Karim.

Maulvi Fajaruddin Ahmad, B.A., Assistant Head Master, Murshidabad Nawab's Madrasah, with effect from the 1st July 1902, *vice* Babu Hari Charan Chatterjea.

Promoted substantively pro tempore *to Class VII.*

Pandit Raj Kumar Tarkaratna, Assistant Master (Head Pandit), Bhagalpur Zilla School, with effect from the 9th February 1902, *vice* Babu Mati Lal Banerjea.

Babu Srish Chandra Ray, B.A., Head Clerk, Rajshahi College, with effect from the 16th March 1902, *vice* Babu Nil Madhab Barik.

Babu Sarat Chandra Mukherjea, Head Clerk, Hooghly College, with effect from the 20th March 1902, *vice* Babu Kanti Chandra Ghosh Hazra.

Maulvi Fajaruddin Ahmad, B.A., Assistant Head Master, Murshidabad Nawab's Madrasah, with effect from the 25th March 1902, *vice* Babu Suraj Mohan Ray.

Babu Braja Lal Adhikari, Assistant Master, Krishnagar Collegiate School, with effect from the 19th April 1902, *vice* Babu Kali Prasanna Banerjea.

Babu Sarveswar Mukherjea, Assistant Master, Murshidabad Nawab's High School, with effect from the 20th April 1902, *vice* Pandit Raj Kumar Tarkaratna.

Mr. S. W. Percival, Assistant Master, Dacca Collegiate School, with effect from the 1st July 1902, *vice* Babu Srish Chandra Ray.

Babu Sital Prasad, B.A., Assistant Master, Chapra Zilla School, with effect from the 1st July 1902, *vice* Babu Sarat Chandra Mukherjea.

Babu Baidya Nath Ghoshal, B.A., Assistant Master, Ravenshaw Collegiate School, Cuttack, with effect from the 1st July 1902, *vice* Maulvi Fajaruddin Ahmad.

Confirmed in Class VIII.

Maulvi Nurul Alam, Assistant Master, Anglo-Persian Department, Calcutta Madrasah, with effect from the 15th January 1902, *vice* Babu Jnanendra Nath Mitra.

Babu Piyari Mohan Mukherjea, B.A., Assistant Master, Palamau Zilla School, with effect from the 9th February 1902, *vice* Babu Mati Lal Banerjea

Babu Kumud Nath Chaudhuri, M.A., Laboratory Assistant, Civil Engineering College, Sibpur, with effect from the 16th March 1902, *vice* Babu Nil Madhab Barik.

Babu Hari Ballabh Mandal, Assistant Head Master, Jalpaiguri Zilla School, with effect from the 20th March 1902, *vice* Babu Kanti Chandra Ghosh Hazra.

Babu Rajendra Nath Sinha, B.A., Assistant Head Master, Barrackpore Government School, with effect from the 19th April 1902, *vice* Babu Kali Prasanna Banerjea.

Babu Satis Chandra Mitra, B.A., Assistant Head Master, Darjeeling High School, with effect from the 1st July 1902, *vice* Babu Srish Chandra Ray.

Appointed substantively pro tempore *to Class VIII.*

Babu Srinath Chandra, Assistant Master (Head Pandit), Mymensingh Zilla School, with effect from the 19th December 1901, *vice* Babu Suresh Chandra Mukherjea, confirmed in Class VIII.

Maulvi Lutful Haq, Assistant Master, Murshidabad Nawab's Madrasah, with effect from the 14th January 1902, *vice* Babu Mahesh Chandra Ghosh, confirmed in Class VIII.

Babu Jagadindu Ray, Second Assistant, Physical Laboratory, Presidency College, with effect from the 20th March 1902, *vice* Babu Hari Ballabh Mandal.

A. PEDLER,
Director of Public Instruction, Bengal.

EDUCATIONAL.

THE following is a supplementary list of the candidates who have passed the Pleadership Examination held on the 24th, 25th and 26th February last :—

Roll No.	Name.	Roll No.	Name.
4.	Nalindra Mohan Ganguli.	486.	Asutosh Saha.
147.	Bhishmadeb Das.	509.	Gowri Nath Chakrabarty.

WILLIAM GRAHAM,
Secretary to the Board of Examiners for Pleadership and Mookhtarship.

Revised list of Junior Scholars of the Rajshahi Division for 1902.

NAME OF SCHOLAR.	School from which he comes.	College in which the scholarship is made tenable.
1	2	3
RAJSHAHI DIVISION.		
Second grade—(6) (5 + 1).*		
Giris Chandra Sen ...	Jalpaiguri Zila School ...	Presidency College.
Panchanan Chatterjea ...	Kurigram H. E School ...	Ditto.
Surendra Chandra Chowdhuri...	Pabna Institution ...	Pabna Institution.
Protap Chandra Sen *Gupta* ...	Rangpur Zila School ...	Rajshahi College.
Mahendra Lal Lahiri ...	Ditto ...	Presidency College.
Satis Chandra Ghosh* ...	Ditto ...	St. Xavier's College.
Third grade—(9 + 1).*		
Giris Chandra Maitra ...	Pabna Institution ..	Pabna Institution.
Golam Rabbani Ahmed ...	Dinajpur Zila School ...	Calcutta Madrassa.
Bireswar Bagchi ..	Rajshahi Collegiate School ...	Rajshahi College.
Krishna Prosad Sanyal ...	Nator Maharaja's School ...	Presidency College.
Benode Behari De ...	Serajganj Banwari Lal School	Ditto.
Mahomad Hedayat Ali ...	Jalpaiguri Zila School	Calcutta Madrassa.
Jogendra Mohan Sen ...	Gaibanda School ...	General Assembly's Institution.
Jyotis Chandra Ray* ...	Rangpur Zila School ...	Presidency College.
Ramjap Ajha ...	Darjeeling High School ..	Ripon College
Sures Chandra Chakravarti ...	Bogra Zila School ...	Victoria College, Cooch Behar.

* Rangpur special scholarships.

A. PEDLER,
Director of Public Instruction, Bengal.

DARJEELING,
The 5th July 1902.

VERNACULAR MASTERSHIP EXAMINATION FOR ORISSA, 1902.

THE following candidates have passed:—

[In order of merit.]

FIRST GRADE.

High.

No.	Name.	Age. Yrs.	M.	School.	Marks.
1.	Harihar Misra ...	19	4	Cuttack Training School	398½

Medium.

1.	Radhamohan Panigrahi ...	21	6	Cuttack Training School	337
2.	Kulamani Panigrahi ...	19	0	Ditto ditto ...	311½
3.	Mandardhar Das ...	20	0	Ditto ditto ...	307
4.	Binayak Kar ...	18	0	Ditto ditto ...	292
5.	Nidhi Mahapatra ...	21	0	Ditto ditto ...	291
6.	Bauchhanidhi Nayak ...	18	0	Ditto ditto ...	288

Low.

1.	Biswanath Mahapatra ...	19	0	Cuttack Training School	273½
2.	Natabar Das ...	22	0	Ditto ditto ...	272½
3.	Bhagavan Panda ...	20	0	Ditto ditto ...	269
4.	Raghunath Das ...	21	0	Ditto ditto ...	260
5.	Basudev Misra ...	20	0	Ditto ditto ...	233

SECOND GRADE.

Medium.

1.	Samanath Sadangi	...	18	4	Cuttack Training School	515
2.	Brindaban Kar	...	18	3	Ditto ditto ...	493½
3.	Bisvambhar Rath	...	20	6	Ditto ditto ...	452
4.	Niladri Das	...	19	0	Ditto ditto ...	450
5.	Govinda Misra	...	19	0	Ditto ditto ...	429
6.	Baisnava Charan Pattanayak.		20	7	Ditto ditto ...	423½

Low.

1.	Banchhanidhi Mahanti	...	19	4	Cuttack Training School	398½
2.	Upendranath Misra	...	18	0	Ditto ditto ...	342½

THIRD GRADE.

Medium.

1.	Chandrasekhar Misra	...	17	0	Cuttack Training School	461½
2.	Haricharan Roul	...	17	2	Ditto ditto ...	444
3.	Dvarikanath Sinha	...	20	4	Ditto ditto ...	413
4	Baisnava Sadangi	...	19	0	Ditto ditto ...	398
5.	Ratnakar Ray	...	17	1	Ditto ditto ...	390
6.	Raghunath Misra	...	19	0	Ditto ditto ...	387

Low.

1.	Sahadev Das	...	17	0	Cuttack Training School	367½
2.	Lakshmidhar Das	...	17	0	Ditto ditto ...	366½
3.	Binodsyam Mahanti	...	20	0	Ditto ditto ...	288½

DARJEELING; A. PEDLER,

The 7th July 1902. *Director of Public Instruction, Bengal.*

CIVIL ENGINEERING COLLEGE, SIBPUR.

AGRICULTURAL DEPARTMENT.

HIGHER AGRICULTURAL CLASS.

SESSION, 1902-1903.

RULES FOR ADMISSION.

FOR admission to the Higher Agricultural Class, an applicant must have one of the following qualifications:—

(*i*) He must have passed the F. E. examination of the Calcutta University, and be under 23 years of age, but no student will be allowed to join the Agricultural Class after the expiration of five years from admission into the Engineering College.

(*ii*) He must have passed the B. A. examination of the Calcutta University by the B course, or possess other sufficient educational qualifications; be under 23 years of age, and, in addition, have received a nomination from the Bengal Government.

(*iii*) He must have had a general education qualifying him to follow the instruction in the Higher Agricultural Class, and must also receive a nomination from Government for admission as a special student. To be eligible for a nomination under this rule, a candidate must either have landed property of his own, or be recommended by some influential landholder who desires to train him to take part in the management of his estate, or he must otherwise satisfy Government that he intends to make practical use of his agricultural training. Students entering under this rule will be termed Special Agricultural Students. They will not be subject to any maximum limit of age, but will not be entitled to the privileges conferred on passed students under rules 12 and 13, even though they should obtain fully-signed diplomas in due course after passing the necessary examinations.

Every candidate for admission to this Department must apply in writing to the Principal not later than the 14th July. The form of application for a nomination, which must be addressed to the Principal, is given in Appendix B. In the event of the form not being properly filled up and accompanied by the necessary certificates, no notice will be taken of the application.

The number to be nominated will depend on the accommodation available.

Every applicant, not already a student of the College, must undergo a medical examination by the College Surgeon before admission to this Department. If this officer's report is unsatisfactory, the applicant will not be admitted.

COURSE OF INSTRUCTION.

The course of instruction in the Higher Agricultural Class will extend over two academic years.

SCHOLARSHIPS.

Senior scholarships awarded in the Engineer Department are tenable in the Agricultural Department.

One graduate scholarship of Rs. 30 a month, tenable for one year, will be awarded on the result of the examination held at the end of the first academic year.

APPOINTMENTS.

Two appointments annually are assigned to students holding a fully-signed diploma: one in the Provincial Executive Service and one in the Subordinate Executive Service. The right of selection for these appointments will rest with Government, and the students who gained the highest marks at the examination for diplomas will not necessarily be selected.

Other holders of fully-signed agricultural diplomas who wish to compete at the examination for admission to the Provincial, Subordinate Executive, and Opium Services may submit their names through the Principal to Government for nominations. These applications for nominations will be considered, provided the applicants appear to His Honour the Lieutenant-Governor to be otherwise suitable for admission to these services.

ENTRANCE AND TUITION FEES.

Each student in the Higher Agricultural Department will be required to pay an admission fee of Rs. 10, except such students as may wish to join after passing this year's F. E. examination.

For the present no tuition fees will be charged to students in the Agricultural Department, except in the case of those joining as special students under rule 3 (*iii*). The tuition fees for these students will be Rs. 8 a month.

Further particulars may be obtained free on application to the Principal.

SIBPUR, B. HEATON,
The 14th June 1902. *Offg. Principal, Civil Engineering College.*

CHITTAGONG DIVISION.

Rules for the admission of Private Students to the University Examinations of 1903.

I.—ENTRANCE EXAMINATION.

1. A student who does not appear from any school, or who has been transferred since the 1st of September next preceding the examination, without the consent of an Inspector of Schools, to the school from which he appears, will be treated as a private student.

2. The term "private student" includes school-masters.

3. Private students are required to attend the test examination of one of the undermentioned high schools, on dates to be fixed by the Head-masters :—

(1) Comilla Zilla School.
(2) Brahmanbaria Annada High School.
(3) Chandpur High School.
(4) Noakhali Zilla School.
(5) Feni High School.
(6) Chittagong Collegiate School (with the Principal's permission).
(7) Chittagong Madrasa.
(8) Chittagong Municipal High School.
(9) Rangamati Government High English School.

4. Applications for permission to appear at the test examination should be made to the Inspector of Schools, and they must reach his office on or before the 15th November 1902.

5. Every private candidate shall state in his application whether he is an ordinary private candidate or a school-master, his age, residence and father's name, the school at which he desires to appear for the test examination and his postal address, which should be written legibly and distinctly, so that no mistake may be likely to occur.

6. A private candidate who is not a school-master should file with his application the Transfer Certificate (in original) granted him from the school in which he last studied; or, if he failed at a previous Entrance Examination and did not join a school afterwards, the Registrar's receipt (in original) for the fee paid; or he will furnish satisfactory proof that he has not failed at the test examination of any entrance school in the current session, and that he is of good moral character.

7. A school-master will have to file with his application a certificate from the Secretary or Proprietor of the school in which he is serving to the effect that he has been a *bonâ fide* paid teacher of the school since the 2nd June 1902. In case he has served in more than one school, he must produce certificates from the several schools of his having been a *bonâ fide* paid teacher all along since the 2nd June 1902.

8. If this office is satisfied that the necessary conditions have been fulfilled, the permission asked for will be granted and sent to the applicant, who must produce it before the Head-master of the school at which he desires to appear for the test examination.

9. A private candidate should be identified to the satisfaction of the officer conducting the test examination.

10. Each private student will pay a fee of Rs. 2 to the Head-master of the school at which he appears for the test examination. The fee is intended to meet the cost of the examination and charges for postage, &c.

11. The Head-master of each of the abovenamed schools is requested to direct the private candidates who may pass at the test examination from his school to appear before him on a fixed date, which should not be later then the 2nd January, and cause them to fill in the forms of application for admission to the Entrance Examination in his presence. He will then sign the certificates appended to the applications, and forward them to this office (in a registered cover, if sent by post) for countersignature. Under no circumstances should the entrance fee be sent to this office.

12. After countersignature the applications will be sent by the Inspector direct to the candidates, who must make their own arrangements for the transmission of their applications and fees to the Registrar of the Calcutta University, so as to be received at his office on or before the 22nd January 1903.

13. The Entrance Examination will be held on the 2nd March 1903 and following days.

II.—F.A. AND B.A. EXAMINATIONS.

1. Deputy Inspectors of Schools, Sub-Inspectors of Schools and *bonâ fide* masters of English schools, who have served as such for the full period of two academical years after passing the Entrance, will be admitted to the F.A examination; and those who have served for the same period after passing the F.A. will be admitted to the B.A. Examination. Candidates who have failed in the F.A. or B.A. examination may be admitted to the same examination if they have served for a term of six months since the date of the last examination.

2. By *bonâ fide* masters of English schools are to be understood teachers who hold regularly paid appointments in recognised English schools teaching at least the Middle English course.

3. All applications from school-masters to the Inspector for permission to appear at the F.A. or B.A. examination should be accompanied by certificates of length of service (with dates) from the Secretaries of the schools in which they are employed, and should reach this office not later than the 5th January 1903.

4. The application of a school-master for admission to the F.A. or B.A. examination should be signed by him in the presence of the Secretary or a member of the Managing Committee of the school in which he is employed. It should then be forwarded to the Inspector for his signature, accompanied by (1) a certificate from the Secretary or a member of the Managing Committee to the effect that it has been signed by the candidate in his presence; (2) the University certificate of the candidate in proof of his having passed the Entrance or F A. examination, as the case may be; and (3) the Registrar's receipt to prove, if this be the case, that the candidate has appeared at the examination of any previous year. The B.A. candidates should also send in their Entrance pass certificates.

5. After signature by the Inspector, the application, together with the documents that accompanied it, will be returned to the candidate, who will have to send the application and the examination fee to the Registrar of the Calcutta University, so as to reach his office on or before the 2nd February 1903.

6. The F.A. and B.A. Examinations will be held on the 16th March 1903 and following days.

CHITTAGONG,
The 24th June 1902.

MUHAMMAD IBRAHIM,
Inspector of Schools, Chittagong Division.

NOTIFICATIONS OF THE BOARD OF REVENUE.

No. 1716B.

NOTICE is hereby given that the Eighth Sale of Opium, the Provision of 1900-1901, will be held at the Government Opium Sale-room, No. 2 Bankshall Street, on Monday, the 4th August 1902, at 11 A.M., and will comprise 4,000 chests, viz:—

	Chests.
Opium manufactured at the Patna Factory, consisting of	2,000
Ditto ditto at the Ghazipur Factory, consisting of ...	2,000
Total ...	4,000

2nd.—The general conditions of the sale now advertised will be the same as usual. They may be ascertained by reference to the Notification issued on the 19th November 1901, and published in the *Government* and *Exchange Gazettes*, or on personal application at the Office of the Board of Revenue.

3rd.—The latest dates for deposit and clearance will be the 9th and 19th August 1902, respectively, that is to say, no Bank of Bengal Receipts, Government Promissory Notes, or other public securities that may be tendered for deposit in redemption of Promissory Notes given by purchasers in the sale-room will be received after 1-30 P.M. of Saturday, the 9th August 1902, and no Bank of Bengal Receipts in full payment of lots will be accepted after 3-30 P.M. of Tuesday, the 19th August 1902.

4th.—In addition to the quantity above advertised for sale, the following quantities, more or less, of the opium manufactured at the Patna and Ghazipur Factories will be brought to sale down to December next, on or about the dates specified below. The Board of Revenue, however, reserve to themselves the right of altering these dates, should circumstances render it expedient to do so:—

DATES.	Manufactured at the Patna Factory; about chests.	Manufactured at the Ghazipur Factory; about chests.	Total; about chests.
On or about Monday, 1st September 1902 ...	2,000	2,000	4,000
On or about Monday, 29th September ,, ...	2,000	2,000	4,000
On or about Monday, 3rd November ,, ...	2,000	2,000	4,000
On or about Monday, 1st December ,, ...	2,000	2,000	4,000
Total ...	8,000	8,000	16,000

By order of the Board of Revenue, L. P.,
H. WHEELER, *Secretary.*

BOARD OF REVENUE, L. P., CALCUTTA, *the 1st July 1902.*

Statement showing the Quantity of Salt (Private Property) in Bonded Warehouses and Afloat on the River Hooghly on the 30th day of June 1902, and Transactions during the half-month from the 16th to the 30th June 1902.

DESCRIPTION OF SALT.	IN BONDED WAREHOUSES IN CALCUTTA.				Quantity afloat.	Grand Total.	TRANSACTIONS DURING HALF-MONTH FROM THE 16TH TO THE 30TH JUNE 1902, INCLUSIVE.			
	In private golas.	In Sulkea Government golas.	In Kidderpore Dock Government golas.	Total.			Quantity on which duty has been paid.	Manifested quantity arrived in the Port of Calcutta.	Deliveries from shipboard for consumption and for inland bonded warehouses.	Deliveries from bonded warehouses for consumption and for inland bonded warehouses.
1	2	3	4	5	6	7	8	9	10	11
		Mds.	Mds.	Mds.	Mds.	Mds.	Mds.	Mds.	Mds.	Mds.
United Kingdom—										
Liverpool and other Panga salt.	.....	5,46,080	7,92,133	13,38,213	1,53,742	14,91,955	1,45,567	1,75,794	50,715	1,05,262
Other European countries—										
Hamburg salt	.....	1,46,961	13,851	1,60,812	.. ..	1,60,812	59,759	34,851	17,100	50,494
Aden and Red Sea—										
Aden salt	.....	3,65,851	32,596	3,98,447	.	3,98,447	98,592	.....	...	92,742
Salif salt	.....	2,33,345	.....	2,33,345	1,30,667	3,64,012	60,702	1,34,811	9,600	51,310
Salif rock salt	.....	11,615	.....	11,615	.....	11,615	500	... ..	.....	500
Rawayah salt ...	.....	23,494	8,640	32,134	1,51,304	1,83,438	17,800	1,76,944	2,150	12,300
Muscat and Persian Gulf—										
Muscat, Lingah and Hanjam salt.	.....	.....	.....	.....	.....	.....	... ..	.....	.....	.....
Ditto ditto Rock salt.	.....	2,897	.....	2,897	.....	2,897	.....	.....	.....	.....
British India—										
Bombay salt	.....	1,58,272	.....	1,58,272	.....	1,58,272	21,187*		7,950	24,669
Madras salt	.....	.....	.....	.....	.....	.....	.....	.....	.....	.....
Coconada salt	.. ...	.....	.....	.....	.....	.....	.....	.....	.....	.....
Vizagapatam salt	.....	.... .	.....	.....	.. ...	.....	.....	.....	.....	.....
Other places—										
Madagascar salt	.....	.....	.....	... ..	.....	.....	.....	.....	.....	.....
Port Said salt	...	1,12,780	.....	1,12,789	.....	1,12,780	9,535	.....	.....	14,545
Total ...	.....	16,01,304	8,47,220	24,48,524	4,35,713	28,84,237	4,13,642	5,22,100	87,515	3,51,822

* This quantity includes 20,853 maunds 20 seers Bombay, Karkach salt on which duty was paid at Bombay.

By order of the Board of Revenue, L. P.,
L. F. MORSHEAD, *Offg. Collector of Customs.*

CALCUTTA CUSTOM HOUSE, *the 8th July 1902.*

ELECTION OF MUNICIPAL COMMISSIONERS.

NOTIFICATION.

IT is hereby notified for general information that a bye-election will be held on Monday, the 4th August 1902, under section 27 of the Bengal Municipal Act, III (B.C.) of 1884, as amended by Act IV (B.C.) of 1894, in Ward No. 4 of the Chapra Municipality, in the district of Saran, for the election of a Commissioner for that Ward in the place of Maulvi Syed Nazeer Haider, resigned, under section 27A (2) of the Act.

L. HARE, *Commissioner.*

PATNA COMMR.'S OFFICE, BANKIPORE, *the 2nd July 1902.*

NOTIFICATION.

IT is hereby notified for general information that a bye-election will be held on Monday, the 4th August 1902, under section 27 of the Bengal Municipal Act, III (B.C.) of 1884, as amended by Act IV (B.C.) of 1894, in the Motihari Municipality, in the district of Champaran, for the election of a Commissioner for that Ward in the place of Babu Kanti Bhusan Bauerjee, deceased.

L. HARE, *Commissioner.*

PATNA COMMR.'S OFFICE, BANKIPORE, *the 1st July 1902.*

NOTIFICATION.

IT is hereby notified for general information that at a bye-election held, under section 27 of the Bengal Municipal Act, III of 1884, as modified up to 1st November 1896, on Saturday, the 31st May 1902, in Ward No. I of the Kharar Municipality, in the district of Midnapore, Babu Sarat Chandra Ghose was elected a Commissioner of the Municipality, *vice* Babu Behary Lal Chaudhri, deceased.

R. CARSTAIRS, *Commissioner.*

COMMR.'S OFFICE, BURDWAN DIVN., CHINSURA, *the 2nd July 1902.*

NOTIFICATION.

UNDER rule 15 of the revised rules for the election of Commissioners under the Bengal Municipal Act, it is hereby notified for general information that a bye-election of a Commissioner for Ward No. II of the Purulia Municipality, in the district of Manbhum, will be held on the 31st July 1902, *vice* Babu Jugal Kishore Mitra, resigned.

KRISHNAKALI MUKHARJI, *Pers. Asst.*, for *Offg. Commr.*

COMMR.'S OFFICE, RANCHI, *the 5th July 1902.*

NOTIFICATION.

UNDER Rule 21 (*b*) of the Rules for the management of Charitable Hospitals and Dispensaries in Bengal, Babu Debi Prasad Marwari is appointed an additional member of the Committee for the management of the Charitable Dispensary at Bhagalpur.

H. C. WILLIAMS, *Commissioner.*

COMMR.'S OFFICE, BHAGALPUR, *the 20th June 1902.*

NOTIFICATION.

IT is hereby notified for general information that, under Rule 21 (*b*) of the revised Dispensary Manual, Babu Dwijendra Nath Neogi is appointed a member of the Committee for the management of the Supaul Charitable Dispensary, in the district of Bhagalpur, in place of Babu Panchanan Baksi, who has left the place.

H. C. WILLIAMS, *Commissioner.*

COMMR.'S OFFICE, BHAGALPUR, *the 25th June 1902.*

The Calcutta Gazette.

WEDNESDAY, JULY 9, 1902.

PART IA.

Orders and Notifications by the Government of India, &c.

[*Reprinted from the "Gazette of India."*]

The following orders, issued by the Government of India in the Home Department, are republished for general information.

C. E. BUCKLAND,
Chief Secy. to the Govt. of Bengal

NOTIFICATIONS.

PUBLIC.

Simla, the 30th June 1902.

No. 2027.—In accordance with the provisions of section 18, sub-section (*1*) of the Indian Explosives Act, 1884 (IV of 1884), and with the directions contained in the Notification of the Government of India in the Home Department, No. 1964, dated the 2nd September 1887, the Governor-General in Council is pleased to publish, for the information of persons likely to be affected thereby, the following draft of an amendment which it is proposed to make in the rules to regulate the transport and importation of explosives, published with the like Notification No. 5528, dated the 11th October 1901.

The draft will be taken into consideration on or after the 1st August 1902.

Draft amendment.

After the words "nothing in these rules shall apply" in the third paragraph of the Notification of the Government of India in the Home Department, No. 5528, dated the 11th October 1901, the words "to the packing or transport of capped safety cartridge cases if otherwise empty or" shall be inserted.

JUDICIAL.

The 2nd July 1902.

No. 1015.—Captain T. S. Barton, Indian Staff Corps, Cantonment Magistrate, Barrackpore and Dum-Dum, is granted privilege leave for three months, with leave out of India for one year in continuation, with effect from the date on which he avails himself of it. Pension service—16th year, commenced on 5th February 1902.

J. P. HEWETT,
Secy. to the Govt. of India.

The following orders, issued by the Government of India in the Foreign Department, are republished for general information.

C. E. BUCKLAND,
Chief Secy. to the Govt. of Bengal.

Simla, the 4th July 1902.

* * * * *

No. 1113-G.—The following changes are made in the graded list of the Political Department:

* * * * *

Consequent on the grant of privilege leave and special leave combined to Lieutenant-Colonel M. J. Meade, C.I.E., Indian Staff Corps, a Resident of the 2nd class, and with effect from the 2nd June 1902,—

* * * * *

Mr. E. V. Gabriel, of the Indian Civil Service (on privilege leave), an Officiating Political Assistant of the 2nd class, to officiate as a Political Assistant of the 1st class.

* * * * *

Consequent on the grant of privilege leave to Mr T. C Edwards, of the Indian Civil Service, then officiating as a Political Agent of the 4th class, and with effect from the 28th June 1902,—

* * * * *

Mr. L. M. Crump, of the Indian Civil Service, an Officiating Political Assistant of the 2nd class, to officiate as a Political Assistant of the 1st class.

* * * * *

H. S. BARNES,
Secy. to the Govt. of India.

The following order, issued by the Government of India in the Finance and Commerce Department, is republished for general information.

C. E. BUCKLAND,
Chief Secy. to the Govt. of Bengal.

LEAVE AND APPOINTMENTS.

Simla, the 2nd July 1902.

No. 3650-P.—Mr. K. J. Badshah, I.C.S., is appointed Postmaster-General, Bengal, with effect from the 28th of June 1902.

E. N. BAKER,
Offg. Secy. to the Govt of India.

The following order, issued by the Government of India in the Military Department, is republished for general information.

C. E. BUCKLAND,
Chief Secy. to the Govt. of Bengal.

Simla, the 4th July 1902.

VOLUNTEER CORPS.

APPOINTMENTS, PROMOTIONS AND RESIGNATIONS.

No. 618.—Calcutta Port Defence Volunteer Corps (Engineer Company)—

Frederic Palmer, Esquire, to be Captain, with effect from the 1st April 1902, *vice* Edwards, transferred to the supernumerary list.

E. G. BARROW, *Major-General,*
Secy. to the Govt. of India.

The Calcutta Gazette.

WEDNESDAY, JULY 9, 1902.

PART IB.

MUNICIPAL AND LOCAL.

NOTIFICATION.

Nr. 1188T.M.—The 1st July 1902.—It is hereby notified that the members of the Barh Local Board, in the district of Patna, having at a meeting, under section 25 of the Bengal Local Self-Government Act, III of 1885, requested the Lieutenant-Governor to appoint a Chairman, the Lieutenant-Governor is pleased, under the said section, to appoint Mr. V. B. Cobden-Ramsay to be the Chairman of that Local Board.

Patna.

E. W. COLLIN,
Offg. Secy. to the Govt. of Bengal.

NOTIFICATION.

No. 1197T.M.—The 3rd July 1902.—It is hereby notified that, under section 27 of the Bengal Municipal Act, III of 1884, as modified up to 1st November 1896, the Lieutenant-Governor is pleased to appoint Maulvi Rakibuddin to be a Commissioner of the Jessore Municipality, *vice* Munshi Mauhazuddin.

Jessore.

E. W. COLLIN,
Offg. Secy. to the Govt. of Bengal.

NOTIFICATION.

No. 1205T.M.—The 3rd July 1902.—It is hereby notified that, under section 11 of the Bengal Local Self-Government Act, III of 1885, the Lieutenant-Governor is pleased to appoint the following gentlemen to be members of the Serajganj Local Board, in the district of Pabna:—

Pabna.

Mr. J. Johnston.	Babu Ram Chandra Majumdar.
Maulvi Abdur Rahaman Mahmud.	„ Parbati Charan Mukherji.

2. The Lieutenant-Governor is also pleased to appoint the following gentlemen, under section 10 of the Act, to be members of the Sadar Local Board, in the above district:—

Babu Mukunda Lal Sarkar.	Babu Jagat Chandra Bhaduri.
„ Ambika Charan Roy.	„ Narendra Narayan Chowdhuri.
Mahamad Ismail Chowdhury.	„ Durga Kanta Chakravarti.
Mahamad Moziruddin Chowdhury.	„ Gopal Chandra Sarkar.
Babu Mohini Mohan Lahiri.	„ Nishi Kanta Chatterjee.
„ Beni Madhav Talukdar.	„ Durga Kanta Rai Chowdhury.

E. W. COLLIN,
Offg. Secy. to the Govt. of Bengal.

NOTIFICATION.

No. 1226T.M.—The 5th July 1902.—It is hereby notified that, under section 27 of the Bengal Municipal Act, III of 1884, as modified up to 1st November 1896, the Lieutenant-Governor is pleased to appoint Mr. G. S. Bomwetsch to be a Commissioner of the Darjeeling Municipality, in the district of Darjeeling, *vice* Mr. C. E. Judge, resigned.

Darjeeling.

E. W. COLLIN,
Offg. Secy. to the Govt. of Bengal.

NOTIFICATION.

No. 1228T.M.—The 5th July 1902.—It is hereby notified that, under section 27 of the Bengal Municipal Act, III of 1884, as modified up to 1st November 1896, the Lieutenant-Governor is pleased to appoint Babu Rajendra Chandra Das Gupta to be a Commissioner of the Sherpur Municipality, in the district of Mymensingh, *vice* Babu Abhoy Chandra Ghosh, resigned.

Mymensingh.

E. W. COLLIN,
Offg. Secy. to the Govt. of Bengal.

The Calcutta Gazette.

WEDNESDAY, JULY 9, 1902.

PART II.

Advertisements.

[N. B.—Advertisements, Notices, &c., intended for insertion in this part of the Gazette cannot be received after Noon on Monday.]

LAND SALE NOTICES.

Notice of Sale for Arrears of Revenue.

NOTICE is hereby given, under section VI, Act XI of 1859, read with Act VII (B.C.) of 1868 and Act II (B C.) of 1871, that the undermentioned Noabad taluks in the district of Chittagong will be put up to public and unreserved sale at the Collector's office of that district on the 11th day of July 1902 for arrears and cesses remaining unpaid on the 25th day of May 1902:—

No. of tenure.	Name of tenure with its situation.	Name of proprietor.	Annual Jama.		Amount of arrears for which the tenure is to be sold.		
			Rent.	Cesses.	Rent.	Cesses.	Total.
2	3	4	5	6	7	8	9
			Rs. A. P.	Rs. A. P.	Rs. A. P.	Rs. A. P.	Rs. A. P.
31 / 1823	Thana Banskhali, mauza Nakora, mahal Noabad Hal, taluk Raj Kumar Rai.	Mohesh Chandra Bhattacharji	1,139 0 0	127 0 6	427 2 0	47 10 0	474 12 0
17 / 420	Thana Banskhali, mauza Chambal, mahal Noabad, taluk Tajannissa.	Fazar Ali Chowdhuri ...	1,954 4 0	161 9 6	732 14 0	60 9 6	793 7 6
5200 / 4966	Thana Satkania, mauza Churamoni, mahal Noabad, taluk Mohesh Chandra and Chaitanya Charan.	Rai Kailas Chandra Das, general manager on bohalf of estate Surendra, Bijoy and Raj Chandra Sen and others.	511 14 0	7 7 0	47 7 0	.....	47 7 0
5674 / 5069	Thana Satkania, mauza Pahar Chanda, mahal Noabad, taluk Nilmoni, Ishan Chandra and Shasti Charan.	Rai Kailas Ch. Das Bahadur, general manager on behalf of estate Abdul Fattah Khan and Upendra Chandra Bhattacharji and others.	651 10 0	50 9 0	124 12 8	7 7 8	132 4 4
6239 / 5017	Thana Satkania, mauza Charamba, mahal Noabad, taluk Kali Kinkar, Kashi, Upendra Das, Hori, Ishan, Debi Das and Ram Sharan.	Kollas Chandra, Purna Chandra Choudhuri and others.	1,986 14 0	77 10 0	743 5 9	29 2 0	772 7 9

Chittagong, the 7th June 1902.

A. H. Vernede, Covtd. Depy. Collector, *for* Collector.

Notification B.

NOTICE is hereby given, under sections 6 and 13, Act XI of 1859, that unless the arrears mentioned below are paid on or before the next latest date of payment, viz., the 28th June 1902, the undermentioned estates or shares of estates in the district of Tippera will be put up for sale at the office of the Collector of that district on the 26th September 1902 at 12 o'clock for the said arrears.

When in columns 5, 7 and 9 of the appended statement it is stated that only a share is to be sold, it is to be understood that a separate account is kept for that share.

Tauzi No.	Name of mahal and pargana.	Sadar jama of whole estate.	Whether the whole estate is to be sold.	If only a share is to be sold, specification of such share or shares.	Names of proprietors of property to be sold.	If only a share is to be sold, the sadar jama of such share.	If the whole estate is to be sold, the arrears due from it.	If only a share is to be sold, the arrears due from it.	Nature and amount of demand for which to be sold.
1	2	3	4	5	6	7	8	9	10
		Rs. A. P.				Rs. A. P.	Rs. A. P.	Rs. A. P.	Rs. A. P.
1925	Pargana Uttar Sahapur char near Nagarer Kandi, No. 211.	1,296 10 9	Whole ...	.....	Isban Chandra Datta and others.	.....	202 9 4	.....	202 9 4

Tippera Collectorate the 29th May 1902. H. W. SCHOOPE, Offg. Collector.

Notice of Sale for Arrears of Revenue.

NOTICE is hereby given, under section VI, Act XI of 1859, read with Act VII (B.C.) of 1868 and Act II (B.C.) of 1871, that the undermentioned Noabad taluks of the Cox's Bazar khas mahal, in the district of Chittagong, will be put up to public and unreserved sale at the Collector's office of that district on the 11th day of July 1902 for arrears and cesses remaining unpaid on the 26th day of May 1902:—

Serial No.	No. of tenure.	Name of mauza, thana and mahal.	Name of Talukdar.	Sadar jama.		Amount of arrear for which the tenure is to be sold.		
				Rent.	Cesses.	Rent.	Cesses.	Total.
1	2	3	4	5	6	7	8	9
				Rs. A. P.	Rs. A. P.	Rs. A. P.	Rs. A. P.	Rs. A. P.
1	4 460/560/576	Thana Teknaf, mauza South Nhila, taluk Ishan Chandra Choudhuri.	Mongjai Choudhuri, Keojai Choudhuri, sons of Rapho Choudhuri, of South Nhila.	1,932 6 0	185 8 6	300 4 0	61 13 6	362 1 6
2	5—1035	Thana Teknaf, mauza South Nhila, taluk Khoama Aungjai and Keojai Choudhuri.	Fateh Choudhuri, Rapasi Choudhuri and Aunglapa Choudhuri, sons of Khangsa Choudhuri, Mongjai Choudhuri, Keokhai Choudhuri, sons of Rapho Choudhuri, Monglafrue Choudhuri, Ori Choudhuri, Katubi Chaudhuri, Chailapo Choudhuri, Khama Choudhuri and Momfrue Choudhuri, sons of Angjai Choudhuri, and Laturi, son of Angia Choudhuri, of South Nhila.	1,621 8 0	70 15 6	264 0 0	23 11 0	287 11 6
3	29 17/19	Thana Teknaf, mauza Haladia Palong, taluk Hari Jugal.	Umatara, wife of Gopi Mohan Sen, of Sonaruh.	896 10 0	298 1 6	338 14 0	99 6 2	438 4 2
4	90—122	Thana Ramu, mauza Khurulia, taluk Buksha Ali.	General Manager, Court of Wards, on behalf of the estate of Mohobut Ali Choudhuri.	688 9 0	92 8 6	2,554 4 0	370 2 0	2,924 6 6
5	119—153	Thana Ramu, mauza Noonachari, taluk Gouri Sankar, Badya Nath Kanungoe.	Golam Buri, Golam Kebria Choudhuri, Golam Akbar Choudhuri, Srimoti Balkis Bibi, Fulchan Bibi, Chambal Bibi, Nabkis Bibi, sons and daughters of Maulvi Nazir Ali Choudhuri, of Uttar Mithachery.	593 1 9	73 11 6	223 5 9	24 9 3	246 15 0
6	126—165	Thana Ramu, mauza Uttar Mithacherry.	Asanulla, son of Jinnat Ali, of Joaria Nallah.	1,071 4 0	122 1 0	401 12 0	40 11 0	442 7 0
7	165—217	Thana Ramu, mauza Kachapia, taluk Rustamali.	Koiafrue Choudhuri, Satoaifrue Choudhuri, sons of Angafrue Choudhuri, of Bandarban.	1,898 8 0	238 11 6	474 8 0	79 9 3	554 1 3
8	166—218	Thana Ramu, mauza Kachapia, taluk Pachkori.	Ahmuddin Choudhuri, son of Pachkori Choudhuri, Magbul Ali, Ekbad Ali, Ekbol Ali, Chunnu Mia, sons of Ahmuddin Choudhuri, of Uttar Mithachery.	1,337 8 0	142 2 0	201 0 0	.....	201 0 0
9	217—34902	Thana Ramu, mauza Garjania, taluk Pachkori.	Keojafrue Choudhuri, Satoaifrue Choudhuri, Koingafrue Choudhuri, sons of Angafrue Choudhuri, of Bandarban.	1,720 0 0	.....	645 0 0	.....	645 0 0
10	246 220/249	Thana Chakaria, mauza Manikpur, taluk Toiafrue.	Dinandra Kumari, wife of Jagabondhu Pal, of Adhunagor.	638 0 0	110 6 6	239 4 0	36 13 0	276 1 0
11	279 274/365	Thana Chakaria, mauza Bheola Manikchar, taluk Bibi Isprak.	Asmat Ali and Jaha Baksha, sons of Magon Ali, of Horina.	1,539 0 0	168 9 0	577 3 0	56 3 6	633 5 6
12	286 252/295/330	Thana Chakaria, mauza Paharchanda, taluk Bibi Isprak.	Durga Kripa Sen, Kali Prasanno Sen, of Guzra, Beni Madhav Sen, son of Braja Mohan Sen, Kashishwari, wife of Ishan Chandra Sen, Girija Shundari, wife of Prankrishna Sen, on behalf of Baroda Kinkor Sen, minor, of Sharoatoli.	1,475 0 0	149 12 6	553 2 0	49 14 10	603 0 10
13	295—78/508—604/690	Thana Chakaria, mauza Toitang, taluk Hari Das Bahardar, Har Chandra and Nobin Chandra.	Nezamat Ali Choudhuri, son of Mahmad Rafi Choudhuri, of Tollardip.	1,199 14 0	191 6 6	63 12 0	.....	63 12 0
14	296—290/3068/305	Thana Chakaria, mauza Kolarbil, taluk Rajakhan.	Akbor Ali Khan, son of Rahat Khan, of Sholkata.	1,044 10 0	109 9 6	358 11 9	36 9 6	395 5 3
15	299—83/609/496	Thana Chakaria, mauza Battoli, taluk Hari Das Bahardar.	Nezamat Ali Choudhuri, son of Mahmad Rafi Choudhuri, of Tollardip.	503 4 0	44 4 0	188 11 0	14 12 9	203 7 9

Chittagong, the 7th June 1902 A. H. VERNEDE, Covtd. Depy. Collector *for* Collector.

NOTICE is hereby given, under sections 6 and 13, Act XI of 1859, that the undermentioned estates or shares of estates in the district of Bhagalpur will be put up for sale at the office of the Collector of that district on the 4th August 1902 for arrears of revenue and other demands which by law are realisable as arrears of land revenue.

When in columns 5, 7, and 9 of the appended statement it is stated that only a share is to be sold, it is to be understood that a separate account is kept for that share. All other shares besides that specified will be excluded from the sale.

Tauzi No.	Name of estate, thana or pargana.	Sadar jama of whole estate.	Whether the whole estate is to be sold.	If only a share is to be sold, specification of such share or shares.	Names of proprietors of property to be sold.	If only a share is to be sold, the sadar jama of such share.	If the whole estate is to be sold, the arrears due from it.	If only a share is to be sold, the share due from it.
1	2	3	4	5	6	7	8	9
553	Makrohi, pargana Naredegar, thana Supoul.	Rs. A. P. 3,768 0 0	.....	Residuary ijmali share— A. G. C. KT. Bishenpur 10 13 1 1	Raja Surendra Narain Singh, &c.	Rs. A. P. 1,520 10 0	.....	Rs. A. P. 32 15 0
				Beldra 5 6 3 2	Durga Narain Singh.			
				Bharba 16 0 0 0	Bishunman Singh, &c.			
				Piprasi ... ... } 16 0 0 0	Ditto.			
				Radai Kalapatti ... }				
				Dubiahi 11 8 0 0	Ditto.			
				Debi Patti 16 0 0 0	Rai Babu Narendra Narain Singh, &c.			
				Dina Patti 16 0 0 0	Ditto.			
				Gamharpur 16 0 0 0	Bishunman Singh, &c.			
3555	Mohanpur Nowhatta, pargana Kahkhand, thana Bongong.	865 12 0	.....	Residuary ijmali share— 16 annas Mohanpur Kalan, sali with dakhli, 3a. 3g. 1c. 1kt. in Nowhatta.	Mardan Ali Kha and others.	632 9 0	.....	24 7 0

Bhagalpur Collector's Office, the 3rd July 1902.

A. MABB, *for* Collector.

Notification A.

NOTICE is hereby given, under sections 6 and 13, Act XI of 1859, that the undermentioned estates and shares of estates in the district of Puri will be put up for sale at the office of the Collector of that district on the 21st July 1902 at 12 noon for arrears of revenue and other demands which by law are realisable as arrears of land revenue.

When in columns 5, 7, and 9 of the appended statement it is stated that only a share is to be sold, a separate account is kept for that share, and the other shares in the estate are excluded from the sale.

Tauzi No.	Name of mahal and pargana.	Sadar jama of whole estate.	Whether the whole estate is to be sold.	If only a share is to be sold, specification of such share or shares (all other shares besides that specified are excluded from the sale).	Names of proprietors of property to be sold.	If only a share is to be sold, the sadar jama of such share.	If the whole estate is to be sold, the arrears due from it.	If only a share is to be sold, the arrears due from it.
1	2	3	4	5	6	7	8	9
		Rs. A. P.				Rs. A. P.	Rs. A. P.	Rs. A. P.
985 / 2	Kalla Rupas, pargana Athies.	1,699 6 0	.....	9p. 6g. 2k. 2c. ...	Trilochan Chaudhuri and others.	985 5 0	.....	91 3 11½
228	Taluk Sohanpur, pargana Damarkhand.	708 0 0	Whole ...	.....	Balaram Bhramarabari Rai.	.....	153 15 11½	.....
63 / 3	Taluk Pursotumpur, pargana Kotrahang.	1,216 0 6	.....	12*pans*	Gopi Nath Das	913 0 0	.....	255 15 11½
257	Taluk Delang, pargana Lembai.	43,564 3 0	Whole ...	.....	Raja Mukund Deb ...	.....	15,382 0 0	.....
147	Mauza Herakristapur, pargana Kahang.	2,143 0 6	Do. ...	.....	Bhikari Misra and others	.....	1,071 15 11½	.....

Puri Collectorate, the 12th June 1902.

A. GARRETT, Collector.

Notice of Sale for Arrears of Revenue.

NOTICE is hereby given, under section VI, Act XI of 1859, read with Act VII (B.C.) of 1868 and Act II (B.C.) of 1871, that the undermentioned Noabad taluks within the Patiya khas mahal, in the district of Chittagong, will be put up to public and unreserved sale at the Collector's office of that district on the 9th July 1902 for arrears and cesses remaining unpaid on the 25th day of May 1902:—

No. of tenure.	Name of tenure with its situation.	Name of proprietor.	ANNUAL RENTAL.		AMOUNT OF RENT FOR WHICH THE TENURE IS TO BE SOLD.		
			Rent.	Cesses.	Rent.	Cesses.	Total.
1	2	3	4	5	6	7	8
			Rs. A. P.	Rs. A. P.	Rs. A. P.	Rs. A. P.	Rs. A. P.
14141 / 19867	Thana Patiya, mahal Noabad, mauza Ichanagar, taluk Osman Sadagar and Sakup.	Raj Chandra Sen, son of Ram Kishore Sen of Sanhara and Sariotullah Sadagar.	530 0 0	14 13 0	110 12 0	5 9 0	116 5 0

Chittagong, the 5th June 1902.

E. GRAKE, Collector.

Notification of Sale.

NOTICE is hereby given, under sections 6 and 13, Act XI of 1859, read with Act VII (B.C.) of 1868, that the undermentioned tenures or shares of tenures in estate Kothdesh, in the district of Puri, will be put up for sale at the office of the Collector of that district on the 28th July 1902 at 12 A M. for arrears of revenue and other demands which by above laws are realizable as arrears of land revenue.

N.B.—When in columns 5, 7 and 9 of the appended statement it is stated that only a share is to be sold, it is to be understood that a separate account is kept for that share, and that all other shares besides those specified will be excluded from the sale.

Number of tenure.	Name of tenure, mahal, and pargana.	Sadar jama of whole tenure.		Whether the whole tenure is to be sold.	If only a share is to be sold, specification of such share or shares. All other shares besides that specified are excluded from sale.	Names of proprietors of property to be sold.	If only a share is to be sold, the sadar jama of such share.		If the whole tenure is to be sold, the arrears due from it.		If only a share is to be sold, the arrears due from it.	
		Rent.	Cesses.				Rent.	Cesses.	Rent.	Cesses.	Rent.	Cesses.
1	2	3		4	5	6	7		8		9	
67 68	Mauza Bhairpur Makadami, taluk Kothdesh, thana Pipli, pargana Kothdesh.	Rs. 631	Rs. A. 38 7	The whole	.....	Madhu Nayak and others.	Rs. A. P.	Rs. A. P.	Rs. A. P. 35 5 0	Rs. A. P. 2 8 9	Rs. A. P.	Rs. A. P. .....
86 87	Biswarpur ditto, thana Gope, pargana Antarodh.	631	44 9	Ditto ...	.....	Durgaprasad Bhagat and others.	.....	.....	157 0 0	11 2 3	.....	.....
90 91	Biswanathpur ditto, thana Pipli, pargana Kothdesh.	1,299	85 3	.....	0p. 7g. 1k. 2k. ...	Gadadhar Pani and others.	517 3 8	33 14 10	.....	.....	107 3 4	7 8 2
125 128	Danua, pargana ditto, thana ditto.	1,243	71 15	.....	14p. 15g. ...	Durgaprasad Bhagat and others.	1,164 5 3	66 5 1	.....	.....	45 3 4	4 8 11
141 144	Garadi Punchan, ditto, pargana ditto.	880	52 12	The whole	.....	Chandhury Krithbas Das and others.	.....	.....	137 8 0	8 3 11	.....	.....
153 161	Hansapada, pargana ditto, thana ditto.	1,195	57 12	Ditto ...	.....	Durgaprasad Bhagat and others.	.....	.....	298 0 0	14 7 0	.....	.....
245 253	Nariso ditto, thana ditto, pargana Antarodh.	1,118	66 3	.....	8p. 15g. 1k. 2d.	Baikuntha Sarangdi and others.	613 1 0	47 5 2	.....	.....	19 12 0	1 8 6
266 274	Pampalo ditto, thana ditto, pargana Kothdesh.	1,036	66 0	.....	12p. 2k. 1k. 12b.	Cha. Chandrasikhar Das and others.	779 1 5	49 10 5	.....	.....	284 12 8	20 11 2
266 274	Mauza Pampalo Makadami, taluk Kothdesh, thana Pipli, pargana Kothdesh.	1,036	66 0	.....	3p. 1g. 1k. 1k. 4b.	Sambhunath Das.	198 10 2	12 10 2	.....	.....	99 5 1	6 5 1
291 299	Ratilo, pargana ditto, thana ditto.	921	51 14	.....	12p. 5g.	Durgaprasad Bhagat and others.	705 2 3	39 11 6	....	....	176 9 6	9 14 10
315 323	Sarkana ditto, thana ditto, pargana ditto.	1,327	101 2	The whole	.....	Parasuram Mahapatra and others.	.....	.....	343 0 3	26 2 6	.....	.....
321 329	Saulakhal ditto, thana ditto, pargana ditto.	485	34 0	.....	13p. 7d.	Durgaprasad Bhagat and others.	304 5 8	27 9 2	.....	.....	33 2 9	7 3 2
334 342	Talatanla ditto, pargana ditto, thana ditto.	534	41 1	.....	3p. 5g.	Keshab Panda and others.	425 8 6	32 11 7	.. .	....	56 14 9	13 11 4
338 346	Taraboi Sasan, pargana ditto, thana ditto.	746	40 6	The whole	.....	Mahant Raghunandan Ramanij Das and others.	.....	.....	23 4 9	1 4 1	.....	.....
340 356	Turuntira ditto, pargana Kalijori.	626	42 6	.....	14p. 2g. 2k. ...	Prusotam Sahoo and others.	552 10 3	37 6 6	... .	... ..	276 5 1	18 11 3
73 74	Bhiligram ditto, thana Gop, pargana Anturodh.	632	43 5	... ..	2p. 5g. 3k. 12d.	Madhusudan Mahaswar.	89 1 0	6 3 3	.. ..	.	44 8 11	3 1 3
277 285	Pratapradrapur ditto, thana Pipli, pargana Kothdesh.	1,446	100 3	.....	7p. 1g. 3k. ...	Mahant Raghunandan Ramanij Das.	640 8 11	44 6 1	. .	.... .	...	1 10 7

Puri Collectorate, the 14th June 1902.

A. GARRETT, Collector.

Notice of Sales for Arrears of Revenue.

NOTICE is hereby given, under section 6, Act XI of 1859, read with Act VII (B.C.) of 1868 and Act II (B.C.) of 1871, that the undermentioned Noabad taluks in the district of Chittagong will be put up to public and unreserved sale at the Collector's office of that district on the 10th day of July 1902 for arrears and cesses remaining unpaid on the 25th day of May 1902:—

Serial No.	Number of taluks.	Name of tenure with its situation.	Name of proprietor.	ANNUAL RENT.		AMOUNT OF RENT FOR WHICH THE TENURE IS TO BE SOLD.		
				Rent.	Cess.	Rent.	Cess.	Total.
1	2	3	4	5	6	7	8	9
1	868 20134	Thana town, mauza Bakalia, mahal Noabad, taluk Ahmed Ali	Munshi Moshraf Ali and others ...	Rs. A. P. 1,395 4 0	Rs. A. P. 236 5 6	Rs. A. P. 495 8 0	Rs. A. P. 79 15 0	Rs. A. P. 575 7 0
2	4757 23878	Thana Fatickcheri, mauza Jujkhola, mahal Noabad, taluk Eyarali Khan.	Obedar Rohoman Khan	2,556 0 0	166 12 0	939 0 0	42 13 9	1,001 13 9

Chittagong, the 5th June 1902.

E. GEAKE, Collector.

Advertisement of Sale.

NOTICE is hereby given that the undermentioned plots of land, no longer required by Government, situated along the East Coast (now Bengal-Nagpur) Railway, Puri Branch, in the district of Puri, will be put up to sale at 12 o'clock on the 4th day of August 1902, corresponding with the 20th Sraban 1309 Fasli, at the Puri station.

The purchasers of the several plots of land will be subject to the following conditions :—

1st.—The purchasers will have no power to make any excavations on the land nearer than 15 feet from the railway fencing, or plough the lands closer than 3 feet from its foundation.

2nd.—If the amount of purchase-money does not exceed Rs. 100, the whole amount must be paid down at once.

3rd.—If the amount of purchase-money exceed Rs. 100, one-fourth of the amount must be immediately deposited. If the balance be not paid by noon of the fifteenth day after the sale, reckoning the day of sale as one, or if that day be a close holiday, then by noon of the first succeeding office day, the sale shall be cancelled, the sum deposited being forfeited to Government, and the lot again put up for sale at the risk of the defaulting purchaser, after issue of advertisement, as in the case of original sale.

4th.—The plots of land will be sold revenue-free to the highest bidders.

5th.—The purchasers shall be put in possession on receipt by the District Collector of the orders of the Board confirming the sale.

Consecutive lot No.	Name of district.	Pargana and mauza.	Number of mile on which land is situate.	Situated on which side of the railway.	Approximate area of lot in bighas and in acres.		Land excluded from sale from each lot.		Commencement and termination of lot.	Boundary of lot.
					B. K. CH.	A. R. P.	Reasons for exclusion.	A. R. P.		
1	2	3	4	5	6		7		8	9
										(Lot No. 1.)
1	Puri ...	Pargana Rahang, ma. Somong.	At mile No 24.	East of the Railway line.		1 3 20			Lot Nos. 1 to 4 ...	*North*—Somong Bharathipur, tanki bajapti land of Hina Biswal. *South*—Kasiharipur. The land to be relinquished in the 25th mile. *East*—Somong Bharathipur, waste land of Bhagban Ramanuj Das and Durga Charan Jugadeb Ray; raiyati land of Apartie Bhoi and lakhraj bajapti land of Balabhadra Prusti and Bhagaban Kaitsing. *West*—Somong Bharathipur, railway line.
										(Lot No. 2.)
2	Do. ...	Ditto ...	Ditto	West of the Railway line	...	4 3 18	Required temporarily by P. W. D. for brick-field.	4 3 18		*North*—Somong Bharathipur, lakhraj bajapti land of Ajib Sundra and Dasa Baral and a *jora* (water channel) of Badyanath Brahmachari. *South*—Somong Bharathipur. The land to be relinquished in the 25th mile. *East*—Somong Bharathipur, railway line. *West*—Somong Bharathipur, tanki jaziri land of Mahadeb Mahapatra and Narain Mahapatra; tanki bajapti land of Badyanath Brahmachari and tanki bahal land of Gadadhar Brahmachari.
										(Lot No. 3.)
3	Do. ..	Pargana Rahang, ma. Kasiharipur.	At mile No. 25.	East of the Railway line.	.....	3 2 30	.. .	..	..	*North*—Kasiharipur and Somong Bharathipur. The land to be relinquished in the 24th mile. *South*—Kasiharipur, lakhraj bajapti land of Durga Charan Bharathi. *East*—Kasiharipur embankment, tanki bahal land of Siba Prusti and Durga Charan Bharathi. *West*—Kasiharipur, railway line.
										(Lot No. 4.)
4	Do. ...	Ditto ...	Ditto	West of the Railway line.	..	11 1 24	Required temporarily by P. W. D. for brick-field.	1 1 14	..	*North*—Somong Bharathipur. The land to be relinquished in the 24th mile. *South*—Kasiharipur, lakhraj bajapti land of Balunkeswar Deb, Siba Prusti and Maguni Raut. *East*—Kasiharipur railway line. *West*—Kasiharipur, raiyati land of Gobind Padhan and Abhi Jena; lakhraj bajapti land of Siba Prusti and Brundu Raut and tanki bahal land of Siba Prusti.
		Total ...	.....	.....		21 3 31		6 0 32		

Puri Collectorate, the 11th June 1902.

A. GARRETT, Collector.

Notification of Sale.

NOTICE is hereby given, under sections 5 and 13, Act XI of 1859, read with Act VII (B C.) of 1868, that unless the arrears mentioned below are paid on or before the next latest date of payment, viz., the 28th April 1902, the undermentioned tenure or shares of tenure in estate Kothdesh, in the district of Puri, will be put up for sale at the office of the Collector of that district on the 28th July 1902 at 12 o'clock noon for the arrear.

When in columns 5, 7 and 9 of the appended statement it is stated that only a share is to be sold, it is to be understood that a separate account is kept for that share, and that the other share or shares in the tenure are excluded from the sale.

No. of tenure.	Name of tenure, mahal and pargana.	Sadar jama of whole tenure.		Whether the whole tenure is to be sold.	If only a share is to be sold, specification of such share or shares. All other shares besides that specified are excluded from sale	Names of proprietors of property to be sold.	If only a share is to be sold, the sadar jama of such share.		If the whole tenure is to be sold, the arrears due from it.		If only a share is to be sold, the arrears due from it.		Nature and amount of demand for which to be sold.
		Rent.	Cesses.				Rent.	Cesses.	Rent.	Cesses.	Rent.	Cesses.	
1	2	3	4	5	6	7	8	9	10	11	12	13	14
99 of 01	Mauza Biswanathpur, taluk Kothdesh, thana Pipli, pargana Kothdesh.	Rs. 1,299	Rs. a. 85 3	...	4p. 7g. 1k. 24r.	Gadadher Pany and others.	Rs. a. p. 517 3 8	Rs. a. p. 33 14 10	.. ..	.. ..	Rs. a. a. 258 9 10	Rs. a. p. 16 15 5	.....

Puri Collectorate, the 17th April 1902

R. C. BANERJEE, Deputy Collector in charge.

Notice of Lease of Waste Lands in the Sunderbans, under Rule 19, Section 11 of the Waste Lands Manual, 1898.

NOTICE is hereby given that the lease of the land specified in the Schedule hereto annexed, and of which the plan is open to inspection at the office of the Commissioner of the Sunderbans, has been applied for by Purnendu Narain Singha, and will be sold at 12 o'clock noon on the 2nd of October 1902, Thursday, at the Sunderbans Commissioner's office at Alipur, unless meantime the sale is stopped or postponed in consequence of claims or objection under Act XXIII of 1863 (to provide for the adjudication of claims to waste lands), or owing to any other cause.

2. The lease of the land will be granted subject to the conditions which are specified below, as well as to the general terms annexed to the Rules for the Sale of Leases of Waste Lands in the Sunderbans of the 24-Parganas, Khulna, and Backergunge, dated 12th November 1879.

Conditions.

That the land shall be subject to all existing rights of way and water and other easements.

That the right of using all streams and channels in any way navigable shall be reserved to the public, as also the use of a towpath not less than 25 feet in width on each side of every such stream and channel.

That no charge will be made for wood and timber standing on the land at the time it is leased, nor for any wood which may be cut and burnt to effect clearances, or which may be used on the land. But for wood and timber exported for sale a duty shall be levied at such rate and in such manner as may, from time to time, be prescribed by Government.

That the Government reserves to itself the right to all minerals on the land, together with such rights of way and other reasonable facilities as may be requisite for working, getting, and carrying away such mineral. It also retains its proprietary right in the land, and only confers on the lessee an occupancy right, which shall be hereditary and transferable.

Schedule.

Number of lot.	District, subdivision and thana.	Area.	Boundaries.
Lot No. 141	24-Parganas, Basirhat, Hasnabad.	Bighas. 14,910	*North*—By a portion of the Poonjali river. *East*—By a portion of the Roymangal river. *South*—By the Panna river. *West*—By a portion of the Sharsha river and by a portion of the Poonjali river. All the above boundaries are as shown in Mr. Sunderbans Commissioner Sunder's map of season 1901-1902.

Alipur, the 27th June 1902.

D. SUNDER, Commissioner in the Sunderbans, Bengal.

Notification A.

NOTICE is hereby given, under sections 6 and 13, Act XI of 1859, that the undermentioned estates and shares of estates in the district of Chittagong will be put up for sale at the office of the Collector of that district on the 14th July 1902 at 12 A.M. for arrears of revenue and other demands which by law are realizable as arrears of land revenue.

When in columns 5, 7 and 9 of the appended statement it is stated that only a share is to be sold, it is to be understood that a separate account is kept for that share.

Tauzi No.	Name of mahal and pargana.	Sadar jama of whole estate.	Whether the whole estate is to be sold.	If only a share is to be sold, specification of such share or shares.	Names of proprietors of property to be sold.	If only a share is to be sold, the sadar jama of such share.	If the whole estate is to be sold, the arrears due from it.	If only a share is to be sold, the arrears due from it.
1	2	3	4	5	6	7	8	9
39 39 33	Thana Joarganj, taraf Asharaf Akbar.	Rs. A. P. 696 1 3	The whole estate will be sold.	..	Shekh Mohamad Ali Chowdhury, Shekh Chowdhury Garang and others.	Rs. A. P.	Rs. A. P. 25 15 11	Rs. A. P. .....
1047 1060 764	Thanas Hathazari, Patia, Rauzan, and Town, taraf Darpanarayan.	2,903 4 3	Only a share will be sold.	Only residuary share No. 12 and no other share will be sold.	Kali Kumar Rai, Chandra Kumar Rai and others.	636 15 3	.....	448 7 10
1278 1282 1017	Thana Satkania, taraf mauza Garangia, bab it taraf Mangutiam Hazari.	2,015 5 9	The whole estate will be sold.		Taran Sing Hazari, Rai Kollis Chandra Das Bahadur, General Manager, on behalf of Abdul Fattah Khan and others.	.....	0 4 4	.....
2093 2100 1512	Thanas Hathazari, Patia, Town, Rauzan, and Satkania, taraf Krishna Kishore Kanungoe.	645 6 7	Only a share will be sold.	Only share No. 1 and no other share will be sold.	Fazal Ahmad, Bazal Samad and others.	524 3 6	.....	131 3 4

NOTE.—The amount shown in columns 8 and 9 represents the arrear due for kist ending 25th May 1902.

Chittagong Collectorate, the 10th June 1902.

E. GEAKE, Collector.

APPENDIX XXX.

Advertisement of Sale.

NOTICE is hereby given that the undermentioned plots of land no longer required by Government, situated along the main line of the East Coast (now Bengal-Nagpur) Railway, in the district of Puri, will be put up to sale at 12 o'clock on 8th day of August 1902, corresponding with the 24th Sraban 1309 Fasli at the Puri station.

The purchasers of the several plots of land will be subject to the following conditions:—

1st.—The purchasers will have no power to make any excavations on the land nearer than 15 feet from the railway fencing, or plough the land closer than three feet from its foundation.

2nd.—If the amount of purchase-money does not exceed Rs. 100, the whole amount must be paid down at once.

3rd.—If the amount of purchase-money exceed Rs. 100, one-fourth of the amount must be immediately deposited. If the balance be not paid by noon of the fifteenth day after the sale, reckoning the day of sale as one, or if that day be a close holiday, then by noon of the first succeeding office day, the sale shall be cancelled, the sum deposited being forfeited to Government, and the lot again put up for sale at the risk of the defaulting purchaser after issue of advertisement as in the case of original sale.

4th.—The plots of land will be sold revenue-free to the highest bidders.

5th.—The purchasers shall be put in possession on receipt by the District Collector of the orders of the Board confirming the sale.

Consecutive lot number.	Name of district.	Pargana and mauza.	Number of mile on which land is situate.	Situated on which side of the Railway.	Approximate area of lot in bighas and acres.		Land excluded from sale from each lot.		Commencement and termination of lot.	Boundary of lot.
					B. K. G.	A. R. P.	Reasons for exclusion.	A. R. P.		
1	2	3	4	5	6		7		8	9
1	Puri ...	Mauza Nayazur, zilla Rameswar, kila Khurda, district Puri	469	West of the Railway line.	... ..	2 0 10	.. .	..	Lots Nos. 1 and 2.	Lot No. 1. *North.*—Mark and Patra's garden and Government waste land. *South.*—Mulikhan's garden. *East.*—Cultivated land of Pandab Srichandan and Bhikar-Khan. *West.*—Cultivated land of Izir Khan, Shaik Fakir, and Pandab Srichandan.
2	Do. ...	Mauza Taladihi, zilla Kuhuri, kila Khurda, district Puri.	449	East of the Railway line.	.	2 0 10	.	.		Lot No. 2. *North.*—Chanda Santra's land. *South.*—Road. *East.*—Road. *West.*—Chanda Santra's land.

Puri, the 16th June 1902.

A. GARRETT, Collector.

Advertisement of Sale.

NOTICE is hereby given that the proprietary right of Government, as specified in the conditions of sale below, to the undermentioned estates situated in the district of Midnapore, will be put up to sale at the Midnapore Collectorate on Friday, the 26th September 1902, corresponding with the 10th of Aswin 1309 B.S. and 11th of Aswin 1310 A.S.

The purchasers will be subject to the following conditions of sale :—

Conditions of Sale.

1st.—Each estate to be sold to the highest bidder above the upset price, which will be fixed by the Collector at the time of sale. The purchasers of these estates will be considered as the proprietors of the estates, and the entire proprietary right of Government in such estates will be transferred to them, free of revenue.

2nd.—The sales to be subject to existing leases and to the rights conferred by the settlement proceedings and by the laws in force, and the purchasers to be bound to respect the rights of resident cultivators who have signed the schedule of assessment prepared by the revenue authorities.

3rd.—If the amount of purchase-money do not exceed Rs. 100, the whole amount to be paid down at once.

4th.—If the amount of purchase-money exceed Rs. 100, one-fourth of the amount bid to be immediately deposited. If the balance be not paid by noon of the fifteenth day after the sale, reckoning the day of sale as one, or if that day be a close holiday, then by noon of the first succeeding office day, the sale is to be cancelled (the sum deposited being forfeited to Government), and the estate to be again put up to sale at the risk of the defaulting purchasers, after issue of advertisement, as in the case of original sale.

Number on the district roll.	Name of estate and pargana.	Approximate area in acres.	Government revenue assessed.	REMARKS.
1	2	3	4	5
		A. R. P.	Rs. A. P.	
2706	Hiradharpur, pargana Chandrakona ...	0 0 7	.....	Both these estates will be sold revenue free.
2707	Ditto, ditto ..	0 0 21	.....	

Midnapore Collectorate, the 18th June 1902.

H. LUSON, Collector.

Statement of the Affairs of the Bank of Bengal for the week ending 1st July 1902.

LIABILITIES.

	Rs.	A.	P.
Capital paid up	2,00,00,000	0	0
Reserve Fund	1,10,00,000	0	0
Public Deposits at Head Office ... .. Rs. 77,69,112 2 10			
Ditto ditto at Branches „ 1,12,15,193 11 3	1,89,84,305	14	1
Other Deposits at Head Office and Branches...	8,08,65,760	1	1
Bank Post Bills, &c.	4,38,546	7	10
Sundries	27,88,576	4	6
Rupees ...	13,40,77,188	11	6

ASSETS.

	Rs.	A.	P.
Government Securities	1,30,12,292	0	0
Other authorised investments	66,26,361	0	0
Loans on Government and other authorised securities	2,59,74,026	1	5
Accounts of Credit on ditto ditto ...	1,54,73,700	14	11
Bills discounted and purchased	2,20,15,768	7	2
Balances with other Banks	8,12,785	15	3
Bullion	.....		
Dead Stock	16,06,359	15	4
Stamps	13,906	9	1
Sundries	13,27,537	13	9
	8,68,62,738	12	11
Cash and Currency Notes at Head Office* ... ... Rs. 2,39,03,723 12 5			
Cash and Currency Notes at Branches† „ 2,33,10,726 2 2	4,72,14,449	14	7
Rupees ...	13,40,77,188	11	6

* Includes Sovs. & ½ Sovs., value Rs. 51,690 0 0
† Do. do. do. „ 1,16,542 8 0
Rs. 1,68,232 8 0

By order of the Directors,

E. J. BIRCH, Chief Accountant.

W. D. CRUICKSHA , Secretary and asurer.

Rate for Demand Loans, 4 per cent.
Percentage 45·80.

BANK OF BENGA ,
Calcutta, the 3rd July 1902.

(345—1)

Statement of Government Promissory Notes enfaced for payment of Interest in London, under deduction of amount retransferred to India, and outstanding in the books of the Bank of Bengal on the 30th June 1902.

PARTICULARS.	3 per cent. of 1896-97.	3½ PER CENT. LOANS—							4 PER CENT. LOANS—							4½ PER CENT. LOANS—				GRAND TOTAL.
		Of 1842-43.	Of 1854-55.	Of 1865.	Of 1879.	Of 1893-94.	Of 1900-1901.	Total.	Of 1832-33.	Of 1835-36.	Of 1842-43.	Of 1854-55.	Transfer of 1865.	Reduced 4 per cent. loan of 1879.	Total.	Of 1870.		Transfer loan of 1879, 4½ per cent. portion.	Total.	
Balance of 15th June 1902	1,58,71,900	2,24,38,300	11,85,36,600	3,12,28,500	1,29,78,500	100	10,23,700	18,62,05,700	6,934	5,000	.....	15,500	40,800	5,700	73,934	5,000	...	29,500	34,500	20,21,86,034
ADD—																				
Amount enfaced at Madras up to 24th June 1902 ...	.....	.....	.....	.....	.....	.....	.....	.....	.....	.....	.....	.....	.....	.....	.....	.....	...	.....	.....	.....
Amount enfaced at Bombay up to 23rd June 1902	.....	.....	2,01,000	.....	.....	.....	.....	2,01,000	.....	.....	.....	.....	.....	.....	.....	.....	...	.....	.....	2,01,000
Amount enfaced at Calcutta between 16th and 30th June 1902	.....	13,800	23,200	31,500	49,000	.....	20,000	1,37,500	.....	.....	.....	.....	.....	.....	.....	.....	...	.....	.....	1,37,500
	1,58,71,900	2,24,52,100	11,87,60,800	3,12,60,000	1,30,27,500	100	10,43,700	18,65,44,200	6,934	5,000	.....	15,500	40,800	5,700	73,934	5,000	...	29,500	34,500	20,25,24,534
DEDUCT—																				
Amount written off in the London registers ...	.....	15,400	12,12,000	10,56,300	.....	.....	3,400	22,87,100	.....	.....	.....	.....	.....	.....	.....	.....	...	.....	.....	22,87,100
Balance on 30th June 1902	1,58,71,900	2,24,36,700	11,75,48,800	3,02,03,700	1,30,27,500	100	10,40,300	18,42,57,100	6,934	5,000	.....	15,500	40,800	5,700	73,934	5,000	...	29,500	34,500	20,02,37,434

NOTE.—From 9th June 1867 to 30th April 1902—Enfaced from India 11,088 lakhs; retransferred from London 10,415 lakhs.
" 1st May 1902 " 15th May " " " " 13 lakhs " " " 7 "
" 16th " " " 31st " " " " " 7 " " " " 13 "
" 1st June " " 15th June " " " " ... " " " 7 "
" 16th " " " 30th " " " " " 3 lakhs " " " 23 "

11,111 lakhs 10,465 "
10,465 "

Balance against India 646 "

E. HILDRETH,
Superintendent.

W. D. CRUICKSHANK,
Secretary and Treasurer.

(348—1)

PUBLIC DEBT OFFICE, BANK OF BENGAL,
Calcutta, the 2nd July 1902.

Notice of Deaths sent to the Administrator-General of Bengal under section 64 of Act II of 1874.

Name of deceased.	Place of death.	Date of death.	By whom death reported, and when.	REMARKS.
Joshua Marsden Bridgnell ...	Presidency General Hospital.	19th April 1902 ...	District Judge, 24-Parganas, on the 28th April 1902.	No Will.
E. F. W. Allan	Lalakhal Tea Estate, Sylhet.	13th ,, ,, ...	District Judge, Sylhet, on the 19th May 1902.	Not known whether Will left.
Mrs. Mary Gomes	Presidency General Hospital.	20th May ,, ...	District Judge, 24-Parganas, on the 27th May 1902.	Ditto.
Bernard Allen	Monghyr	15th ,, ,, ...	District Judge, Bhagalpur, on the 28th May 1902.	No Will.
Mrs. Booth	Albert Victor Hospital, Lahore.	5th Mar. ,, ...	District Judge, Lahore, on the 29th May 1902.	Intestate.
P. C. Grief	Ahmadpur	24th Feb. ,, ..	District Judge, Mooltan, on the 29th May 1902.	No Will. Letters of Administration granted to Henry Williams on behalf of the minor son of the deceased.
A. L. Biggwither	Yosan ,, ...	21st May ,, ...	District Judge, Meaktila, on the 31st May 1902.	No Will.
Captain William Gray ...	Presidency General Hospital.	26th ,, ,, ...	District Judge, 24-Parganas, on the 3rd June 1902.	Not known whether Will left.
J. Devine	Civil Hospital, Allahabad.	8th Jan. ,, ...	District Judge, Allahabad, on the 7th June 1902.	No Will.

The 7th July 1902. HENRY T. HYDE, Administrator-General of Bengal.

Pure Sulphate of Quinine.

MANUFACTURED AT THE BENGAL GOVERNMENT CINCHONA PLANTATION.

FROM 1st April 1902 the price of this quinine will be as follows:—

1 Pound tin Rs. 17, or, post free, Rs. 17-8
½ ,, ,, ,, 8-8 ,, ,, ,, ,, 8-14.
¼ ,, ,, ,, 4-4 ,, ,, ,, ,, 4-10

Analysis shows this quinine to be of the purest manufacture; and it is guaranteed to be free from wilful mixture with the inferior alkaloids, cinchonine and cinchonidine. It is for sale only to Government officers, and only for cash, and may be had from the Superintendent, Botanic Garden, Sibpur, near Calcutta.

Cinchona Febrifuge.

Cinchona Febrifuge can be purchased by all Government officers and by any one taking *six pounds* and upwards at a time from the Superintendent, Botanic Garden, Calcutta, for cash only at the following rates—

	Government officers.	General public.	Postage extra.
	Rs. A.	Rs.	As.
1 Pound tin ...	10 0	12	8
½ ,, ,, ...	5 0	6	6
¼ ,, ,, ...	2 8	3	4

RAJENDRA CHANDRA CHUCKERBUTTY, B.L., intends to be enrolled as a Vakil, High Court. (368—4—919)

LALIT MOHAN GHOSE, M.A., B.L., intends to be enrolled as a Vakil of the High Court, Calcutta. (367—4—918)

BASANT KUMAR BANERJEA, B.L., intends to be enrolled as Vakil, High Court. (292—4—832)

BABU NIKHIL NATH ROY, B.L., Pleader, District Judge's Court, Murshidabad, intends to be enrolled as Vakil, Calcutta High Court. (322—4—393)

WANTED a Cashier for the Ratan Court of Wards' office on a salary of Rs. 25 per month. None need apply who has no experience of the Court of Wards' work. The successful candidate will have to furnish security of Rs. 500 in cash or in Government securities.

Applications will be received by the undersigned up to 31st July 1902.

F. J. JEFFRIES,
Collector of Monghyr.

S. MOHAMAD,
Manager, Ratan Ward's Estate, Monghyr.

Monghyr, the 2nd July 1902. (347—3)

WANTED at once a permanent Head Clerk for the District Engineer's Office, Palamau Pay Rs. 40. Must have experience of work in an Executive or District Engineer's Office. Apply stating full particulars of past service and enclosing copies of testimonials to the Chairman, District Board, Palamau, Daltonganj Post Office.

SARAT CH. SEN GUPTA,
for Chairman, District Board.

Palamau, the 2nd July 1902. (349—2)

WANTED a Draughtsman for about three months at Chaibassa, Singhbhum District. Pay Rs. 30 per month. Apply at once with copies of testimonials to the undersigned.

H. H. HAINES,
Deputy Conservator of Forests.
Singhbhum Division, Chaibassa.

Wanted

AN Accountant and Head Clerk for the District Board's Office, Bogra, for one year, on Rs. 40 a month, to act in place of the permanent incumbent going on leave. He must be qualified under the rules. Applications will be received by the undersigned up to 15th July 1902.

N. N. BANERJI, *for* Chairman.

Bogra, the 27th June 1902. (331—2)

Notification under Treasure Trove Act, VI of 1878.

IT is hereby notified, under section 5 of Indian Treasure Trove Act, VI of 1878, that on the 23rd September 1901 a treasure, consisting of the undermentioned articles, valued at Rs 42, was found in a pit in the earth in a path poramboke, Paimash No. 46, near Domhacheri tank in Domhacheri village, Domhacheri subdivision, Badinceyakkanur zamindari, Periyakulam taluk, Madura district.

2. All persons claiming the treasure or any part thereof are hereby required to appear personally or by agent before the Collector of Madura at 11 A.M. on 21st August 1902 in view to the matter being enquired into and determined in accordance with the provisions of the Act.

List of property.

57 tolas of silver valued at Rs. 42.

(ILLEGIBLE), *for* Collector of Madura.

Madura Collector's Office, the 1st July 1902.

Notice.

SEALED TENDERS for the supply to the Bombay Dockyard by 8th of September 1902 of 5,000 tons Indian steam coal will be received by the Director of the Royal Indian Marine at his office in the Royal Indian Marine Dockyard, Bombay, up to 1 P.M. gunfire of Monday, the 21st July 1902, after which hour no tender will be received.

2. The coal must be fresh and unscreened, and will be taken delivery of by weighment overside in Bombay Harbour from the vessel bringing it from Calcutta. Any tender making stipulations not provided for either in this notice or in the printed tender form will be summarily rejected.

3. Tenders must be accompanied by a Bank of Bombay or Bengal receipt for the amount to be deposited, or by Government Loan Paper duly endorsed to the Accountant-General, Bombay, and forwarded by registered post. Tenders delivered in any other way will not be received. Informal tenders will be rejected, and no reason assigned for the rejection of any tender. The Director of the Royal Indian Marine does not bind himself to accept the lowest or any tender.

4. Printed tender forms and any information in connection with the contract can be obtained in this Office or from the Deputy Director of the Royal Indian Marine, Kidderpore Dockyard, Calcutta

5. Tenders to be superscribed "Tender for the supply of Indian steam coal to the Bombay Dockyard."

GEORGE WILSON,
Offg. Director of the Royal Indian Marine.
R. I. M. Dockyard, Calcutta, the 4th July 1902.

Notice.

IN continuation of this office notice dated 12th March 1902, published in the *Calcutta Gazette* of the 19th March 1902, Part II, page 314, it is hereby notified for general information, under section 33 of Act IV (B.C) of 1887, the following rates will be charged for hire of the cranes at the Chittagong Jetties for day and night work:—

Rules and rates for day work.

It is optional with a vessel whether she uses her own or the jetty cranes. If she uses the latter, the charges will be as follows:—

	Rs.	A.
For each 35-cwt. crane per day ...	5	0
Ditto 35 ,, ,, per half day	2	8
Ditto 5-ton ,, per day ...	10	0
Ditto 5 ,, ,, per half day	5	0

(2) Day to be from 6 A.M. to 6 P.M.; half day to be from 6 A.M. to noon or noon to 6 P.M.

(3) Any part of a day less than a half will be charged as a half day.

(4) On a ship applying for cranes, if they are supplied, payment must be made for at least half-a-day whether they are used or not.

(5) Should the application have been for the first half only of a day and the crane be required for a longer time, another application must be made through the Jetty Superintendent at least one hour before the expiration of the first half of the day.

(6) Application for cranes required for the whole or half of the following day to be made by 4 P.M. to the Jetty Superintendent.

(7) Should cranes for which application has been made for the whole day not be required for more than the first half day, written notice must be given to the Jetty Superintendent at least one hour previous to the end of the half day, or full day will be charged for.

(8) All applications for cranes to be in regular book forms with counterfoils, and to be signed by the ship's officer on duty, showing number of cranes required, from what time and for how long.

For night work.

Vessels berthed alongside the jetty when working at night shall pay the following charges, which include use of cranes, electric light on jetty and in vessel's holds as far as available—

	Rs.
From 7 P.M. to 1 A.M.	100
For any time in excess of the above six hours up to 6 A.M.	50

R. S. GREENSHIELDS,
Chairman, Port Commissioners.
Chittagong, the 27th June 1902. (344—3)

The Dessai and Parbuttia Tea., Co. Ld.

NOTICE is hereby given that an Extraordinary General Meeting of the abovenamed Company will be held at No. 100 Clive Street, Calcutta, the Registered Office of the Company, on Tuesday, the 15th day of July 1902, at 4 o'clock in the afternoon, when the subjoined Resolutions which were duly passed at an Extraordinary General Meeting of the Company, held on the 17th day of June 1902, will be submitted for confirmation as special Resolutions:—

(1) That it is desirable to reconstruct the Company, and accordingly that the Company be wound up voluntarily, and that Mr. H. T. Peter, of 100 Clive Street, be and he is hereby appointed Liquidator for the purposes of such winding up.

(2) That the said Liquidator be and he is hereby authorised to consent to the registration of a new Company, to be named THE DESSAI AND PARBUTTIA TEA COMPANY, LIMITED, with a Memorandum and Articles of Association which have already been prepared with the privity and approval of the Directors of this Company.

(3) That the draft Agreement submitted to this Meeting and expressed to be made between this Company and its Liquidator of the one part and the said new Company of the other part be and the same is hereby approved, and that the said Liquidator be and he is hereby authorised, pursuant to section 204 of the Indan Companies Act, 1882, to enter into an Agreement with such new Company (when incorporated) in the terms of the said draft and to carry the same into effect with such, if any, modifications as he may think expedien

By order,
GEO. HENDERSON & Co., Secretaries.
100 Clive Street, Calcutta, dated 17th June 1902.
(317—3—872)

Lost

THE Government Promissory Note No. 055321, 3½ per cent. loan of 1865, for Rs 500, originally standing in the names of Annapurna Dasi and Gosto Lal Sen, the proprietors, by whom it was never endorsed to any other person. Payment of the above note and the interest thereupon have been stopped at the Public Debt Office, Bank of Bengal, and application is to be made for accrued interest and for the issue of duplicate in favour of the surviving proprietor after two years from the date of last advertisement.

Name of the surviving proprietor—GOSTO LAL SEN.
Residence—32, Sree Nath Roy's Lane, Chorobagan, Calcutta. (290—3—834)

Notice to Creditors.

PURSUANT to a decree dated 10th February 1902 of the High Court of Judicature at Fort William in Bengal in its Ordinary Original Civil Jurisdiction made in suit No. 688 of 1901, wherein the Alliance Bank of Simla, Limited, is plaintiff, and William Withall, the Administrator to the estate of John Muil Mitchell is the defendant, the creditors of John Muil Mitchell, late of the Hetticherra Tea Estate in Sylhet, Bengal, an European British subject, who died on the 15th day of August 1897, are, on or before the 9th day of August 1902, required to send to the office of the Registrar of this Court on its Original Side their names, addresses and descriptions, the full particulars of their claims, a statement of their accounts and the nature of the securities (if any) held by them, or in default thereof they will be peremptorily excluded from the benefit of the said decree. Every creditor holding any security may produce or transmit the same to the Registrar with the particulars of his claim, or shall produce the same before the Registrar in the Court-house on Friday, the 15th day of August 1902, at 12 o'clock noon, being the time appointed for adjudication of the claims, and in default thereof they will be precluded from the benefit of the said decree.

W. R. FINK, Registrar.

ALEXANDER KINNEY, Attorney for the plaintiff
High Court, Original Jurisdiction, the 3rd July 1902.
(355—1—916)

MR. ANDREW GIBB and MR. ALEXR. MELDRUM have been admitted partners in our firm as from 4th April 1902.

BATHGATE & Co.

THE interest and responsibility of Mr. Donald McGregor in our firm have ceased as from 4th April 1902.

BATHGATE & Co.

(336—1)—899

SUIT No. 444 OF 1899.

In the High Court of Judicature at Fort William in Bengal.

ORDINARY ORIGINAL CIVIL JURISDICTION.

Srimati Prosad Moni Dasi *versus* Kedar Nath Biswas and others.

Notification

TO be peremptorily sold by the Registrar of the High Court of Judicature at Fort William in Bengal in its Ordinary Original Civil Jurisdiction in his sale-room in the Court-house on Saturday, the 2nd day of August 1902, at the hour of 12 o'clock noon, pursuant to a decree of the said Court made in suit No. 444 of 1899 (wherein Srimati Prosad Moni Dasi is plaintiff and Kedar Nath Biswas and others are defendants), and dated the 18th day of January 1902, the following properties:—

Lot I.—No. 13 Kripanath's Lane, in the town of Calcutta, being a two-storied brick-built dwelling-house with land measuring about 7 cottahs 4 chitaks and 38 square feet, and bounded on the north by the premises No. 12 Kripanath's Lane, on the south by the tenanted land No. 14 Kripanath's Lane, on the east by Kripanath's Lane, and on the west by the premises belonging to the late Russick Lall Ghose and others.

Lot II.—No. 5-1 Kripanath's Lane aforesaid, being a lower roomed brick-built tenanted house and titled huts with land measuring about 7 cottahs 7 chitaks and 14 square feet, and bounded on the north by the tenanted land now or lately the property of Gopal Chandra Ghosh, on the south by the premises No. 5 Kripanath's Lane, on the east by Municipal filled up drain now formed into a passage, and on the west by Kripanath's Lane.

Lot III.—All that undivided half share in the tenanted land No. 14 Kripanath's Lane aforesaid, measuring about 2 cottahs 6 chitaks and 12 square feet, and bounded on the north and west by the premises No. 13 Kripanath's Lane, on the south by Russick Lall Ghose's Lane, and on the east by Kripanath's Lane.

The abstracts of title and conditions of sale may be seen at the Registrar's office in the High Court and also at the office of Messieurs T. H. Wilson & Co. at No. 7 Old Post Office Street, or at the office of Babu Akhoy Chunder Dutt at No. 8 Old Post Office Street in Calcutta on any day before the sale and will be produced at the sale.

W. R. FINK, Registrar.

T. H. Wilson & Co., Plaintiff's Attorneys.

The 14th June 1902. (324—1—914)

Howrah Mills Company, Limited.

NOTICE is hereby given that the Twenty-fourth Half-yearly Ordinary General Meeting of Shareholders will be held at the Registered Office of the Company, No. 9 Clive Row, Calcutta, on Friday, the 25th July 1902, at 12-45 P.M., to receive the Directors' Report, pass the audited accounts to 30th June 1902, declare a dividend and transact any other business that may be brought forward.

Dividend warrants will be made out in favour of Shareholders whose names are in the Company's books on the 10th July 1902.

The Share Transfer Register of the Company will be closed from Friday, the 11th, to Friday, the 25th, July 1902, both days inclusive.

By order of the Directors,

ERNSTHAUSEN LD.,

Managing Agents.

Calcutta, the 4th July 1902. (350—3—912)

Estate Arthur Hatton James.

STATUTORY NOTICE TO CREDITORS.

PURSUANT to section 320 of Act X of 1865 and section 42 of Act XXVIII of 1866, notice is hereby given that all persons having claims against the estate of Arthur Hatton James, formerly of 29 Chowringhee, Calcutta, late Commissioner of Police, and lately of Bournemouth in England, should send in particulars of such claims to the undersigned, the Attorney for the Administrators to the said estate, at No. 6 Strand, Calcutta, on or before the 31st day of July 1902, after which date no claims will be admitted and the assets of the estate will be admitted.

ALEXANDER KINNEY, Attorney for H. W. Sparkes and W. Withall, the Administrators.

6 Strand Road, dated 2nd July 1902. (354—1—915)

Notification.

TO be peremptorily sold, pursuant to a decree and order of the Calcutta High Court, Ordinary Original Civil Jurisdiction, in suit No. 657 of 1896 (Sreemutty Nanuballa Dassee *versus* Sreemutty Surut Coomaree Dassee and another), and dated, respectively, 1st day of April 1897 and 7th day of May 1901, by the undersigned in the Registrar's room in the said Court on Saturday, the 16th day of August 1902, at 12 o'clock noon, the following property:—

No. 22 Fackeer Chand Mitter's Street in Calcutta, partly two-storied and partly one-storied house with land, being 6 cottahs and 1 chitak, more or less, and bounded on the north by the bustee land No. 21-5 Fackeer Chand Mitter's Lane, on the east partly by the said bustee land, No. 21-5, and partly by a passage leading to this house and to No. 23 Fackeer Chand Mitter's Street, on the south by a pucca house, No. 23 Fackeer Chand Mitter's Street, and on the west by a passage formed by a filled-up drain.

The abstract of title and conditions of sale may be seen at the office of the undersigned and at No. 1 Hare Street, the office of Messieurs Rutter & Co., Attorneys for the plaintiff, on any day before the sale and will be produced at the sale.

W. R. FINK, Registrar.

Rutter & Co., Plaintiff's Attorneys.

Calcutta High Court, Original Jurisdiction, the 1st day of July 1902. (352—1—917)

Amended notification.

TO be peremptorily sold by the Registrar of the Calcutta High Court, Original Jurisdiction, in his sale-room in the Court-house on Saturday, the 9th day of August 1902 next, at the hour of 12 o'clock noon, pursuant to a decree of the said Court, made in suit No. 611 of 1895 (Mutty Chand and others *versus* Kuppur Chand and others), and dated the 18th day of May 1897, and an order of the said Court, made in the said suit, and dated the 4th day of December 1899—

Lot No. 1.—All that brick-built messuage, tenement or dwelling-house, together with the piece or parcel of land whereon the same is erected and built, containing by estimation 7 cottahs 3 chittacks and 2 katchas, more or less, formerly known as No. 29, China Bazar Lane, numbered 13, Jackson's Lane, in the town of Calcutta, being holding No. 231, Block No. XII, North Division, Calcutta, paying an annual revenue of Re. 1-7-10 to the Collector of Calcutta, and bounded as follows; that is to say, on the north by an open piece of land known as Nos. 2 and 3, China Bazar Lane, belonging to A. M. Isa Bhai; on the south by Jackson's Lane; on the east partly by the house and premises No. 10, belonging to Ram Chand Sing and partly by the house and premises No. 11, belonging to Nritya Kinkar Seal, and on the west partly by the godowns Nos. 14 to 18, belonging to Amrita Lal Mitter, and partly by an open piece of land, known as Nos. 2 and 3, China Bazar Lane, belonging to A. M. Isa Bhai.

The abstract of title and conditions of sale may be seen at the office of the said Registrar or at the office of Messieurs Manuel and Agarwalla at No. 12, Old Post Office Street in the town of Calcutta on any day before the sale and will be produced at the sale.

W. R. FINK, Registrar.

Manuel and Agarwalla, Attorneys, High Court, Original Side, Calcutta, the 12th June 1902. (343—1—913)

Notice.

BEHARI LAL GHOSE, son of Uma Charan Ghose, deceased, of Habibpur, thana Ranaghat, district Nadia, was declared an insolvent by this Court on 30th November 1901, under the provisions of section 351, Civil Procedure Code, and the Nazir of the Ranaghat Munsifi was appointed Receiver of his property.

J. D. CARGILL, District Judge.

Nadia Judge's Court, the 28th June 1902.

(346—1)—920

In the Court of Rai Babu Suresh Chunder Ghose Bahadur, M.A., B.L., Subordinate Judge, 1st Court, Bhagalpur

EXECUTION CASE No. 270 OF 1902.

Panna Lal Marwari, decree-holder, *versus* Nund Kishore Lal Tewari and another, judgment debtors.

THE following property shall be sold by the Nazir of the District Court on the 21st July 1902 at 12 noon for the realization of Rs. 27,583-12-3—

Taluqa Khurd Makhsuspur, with the exception of mauzas Malsar Chakrapur, Radha Benodepur, Nima Fatehpur, and Jugernathpur, *i.e*, Bikrampur Dhanaura *asli*, Amapur, Siboo Udai Ram, Kita Kalianpur, Jalkar Lahori, Turchha, *asli* and *dakhli*, mauza Saruth, Dhawa Fatehpur, Makhsuspur Khurd, *asli* and *dakhli*, No. 273 tauzi, and sadar jama Rs. 1,497-12, with the exception of Malsar Chakrapur, Radha Benodepur, Fatehpur, and Jugernathpur. Estimated value, Rs. 4,000.

SURESH CHUNDER GHOSE, Subordinate Judge, 1st Court.

Bhagalpur, the 25th June 1902. (342—1)

NOTICE.

In the Court of the Subordinate Judge of Manbhum.

EXECUTION CASE No. 79 OF 1902.

Bamapada Sarker, decree-holder, *versus* Raja Bhikambar Sing, judgment-debtor.

THE right, title and interest of the judgment-debtor in the following property will be sold by the Nazir of this Court on the 16th July 1902 at 12 A.M. for the realisation of Rs. 3,995-8-3:—

Judgment-debtor's revenue-paying zamindari, pargana Joypur, bearing tauzi No. 6 of Manbhum Collectorate. The revenue payable to Government is Rs 1,880-4-2 a year. The property is to be sold subject to the mortgage executed by the judgment-debtor in favour of Ram Kumar Dey for Rs. 21,000.

SARADA PROSAD CHATTERJEE,
Offg. Subordinate Judge.

Purulia, the 6th July 1902. (353—1)

INSOLVENT NOTICES.

In the Court for the Relief of Insolvent Debtors at Calcutta.

In the matter of SONTOSH LALL DUTT, an insolvent.

On Wednesday, the 18th day of June last, it was ordered that the matters of the petition of the said insolvent be heard on Tuesday, the 5th day of August next, and that the said insolvent do then attend to be examined before the said Court.

Manick Lall Seal, Attorney. (357—2)

In the matter of BHOLA NATH SIRKAR, an insolvent.

On Wednesday, the 18th day of June last, it was ordered that the matters of the petition of the said insolvent be heard on Tuesday, the 5th day of August next, and that the said insolvent do then attend to be examined before the said Court.

Manmatho Nath Sen, Attorney. (358—2)

In the matter of LESLIE COWAN BELL, an insolvent.

On Monday, the 30th day of June last, it was ordered hat the matters of the petition of the said insolvent be heard on Tuesday, the 5th day of August next, and that the said insolvent do then attend to be examined before the said Court.

C. G. Lewis, Attorney. (359—2)

In the matter of MALIRAM and MADAN GOPAL, lately carrying on business as dealers in piece-goods at No. 51 Cross Street, in the town of Calcutta, insolvents.

On Tuesday, the 17th day of June last, it was, on the petition of Jokhiram, residing at No. 3 Jugo Mohun Mullick's Lane, in the town of Calcutta, Mathra Das, residing at Cawnpore, in the United Provinces, and Iswar Das, residing at No. 3 Jugo Mohun Mullick's Lane, aforesaid, all carrying on business in copartnership as merchants at No. 3 Jugo Mohun Mullick's Lane, in Calcutta, under the name, style and firm of Lal Chand Buldeo Das, creditors of the said insolvents, adjudged that the said Maliram and Madan Gopal have committed an act of insolvency under the provisions of the Act XI Vic., Chapter XXI, and by another order of the same date the estate and effects of the said insolvents were vested in the Official Assignee.

O. C. Gangooly, Attorney. (360—2)

In the matter of WILLIAM ROSS, an insolvent.

On Tuesday, the 6th day of May last, by an order of this Court, the said insolvent was adjudged entitled to his personal discharge under the Act XI Vic., Chapter XXI, as to all persons named in his Schedule as creditors or claiming to be creditors respectively, except as to the debt due to Fred. Dowling, creditor No. 3, mentioned in the Schedule of the said insolvent.

Insolvent in person. (361—1)

In the matter of OSMAN GHANNY, an insolvent.

On Tuesday, the 3rd day of June last, it was specially ordered that this matter be set down for hearing on Tuesday, the 5th day of August next, with liberty to the said insolvent at the said hearing to apply that the order of adjudication made in this matter on the 11th day of December 1899 be annulled and that the vesting order made thereon be discharged.

Khogendra Nath Do, Attorney. (362—1)

In the matter of SONTOSH LALL DUTT, residing at No. 29 Phear's Lane, in the town of Calcutta, late an Indent Broker in the firm of Messrs Mackenzie, Lyall & Co., and now without employment, an insolvent.

Notice that the petition of the said insolvent seeking the benefit of the Act XI Vic, Chapter XXI, was filed in the Office of the Chief Clerk on Wednesday, the 18th day of June last, and by an order of the same date the estate and effects of the said insolvent were vested in the Official Assignee.

Manick Lal Seal, Attorney. (363—1)

In the matter of BHOLA NATH SIRCAR, residing at Gossaiparah Lane, Baugbazar, in the town of Calcutta, a Hindu inhabitant, an insolvent.

Notice that the petition of the said insolvent seeking the benefit of the Act XI Vic., Chapter XXI, was filed in the Office of the Chief Clerk on Wednesday, the 18th day of June last, and by an order of the same date the estate and effects of the said insolvent were vested in the Official Assignee.

Manmatha Nath Sen, Attorney. (364—1)

In the matter of LESLIE COWAN BELL, of No. 90 Lower Circular Road, in the town of Calcutta, an Electrical Engineer in the employ of the Calcutta Tramways Company, Limited, an insolvent.

Notice that the petition of the said insolvent seeking the benefit of the Act XI Vic., Chapter XXI, was filed in the Office of the Chief Clerk on Monday, the 30th day of June last, and by an order of the same date the estate and effects of the said insolvent were vested in the Official Assignee.

C. G. Lewis, Attorney. (365—1)

Chief Clerk's Office, the 7th day of July 1902.

In the matter of AJUDHYA NATH MUKERJEE, an insolvent.

On Monday, the 7th day of July instant, the application for *ad interim* protection in this matter came on for hearing, and the said application was adjourned to Monday, the 14th day of July instant, at the hour of half-past ten o'clock in the forenoon.

☞ "Any creditor of the said insolvent desirous of opposing such application must appear before the said Court at the time and place aforesaid."

Radhica Nath Gangooly, Attorney.
Chief Clerk's Office, the 8th July 1902.

(366—1)

CALCUTTA POST OFFICE NOTICE.

Mails for—	Date and hour of closing at the General Post Office, Calcutta.	Route by which despatched.
United Kingdom, Aden, Egypt, Europe, America, West Africa *vid* United Kingdom and East Africa *vid* Aden (and also South Africa, if superscribed on the cover *vid* United Kingdom or Aden).	1902. 10th July P.M. At 6-30	Per P. & O. steamer from Bombay.
Parcels and money-orders for the United Kingdom and other Foreign places.	9th ,, Parcels P.M. At 5 M-O. P.M. At 4	Ditto ditto
* Australasian Colonies ...	15th ,, ,, 7-30	*Vid* Tuticorin and Colombo.*
† Straits Settlements (also China and Japan, if the steamer's name is superscribed on the cover).	18th ,, ,, 8-30	Per steamer *Suisang.*
Burma	10th ,, ,, 7-30	Per B. I. S. N. Co.'s steamer.
Burma, Penang and Singapore.	12th ,, ,, 7-30	Ditto ditto.
Akyab, Kyaukpyu and Sandoway.	12th ,, ,, 7-30	Ditto ditto.
Burma, Tavoy and Mergui ...	14th ,, ,, 7-30	Ditto ditto.
Port Blair	12th ,, ,, 7-30	*Vid* Rangoon.

* Although the date entered in column 2 is, as far as can be calculated, the latest safe date of posting for the next Mail steamer, full allowance being made for the steamer being in advance of her published timing, Mails for the places mentioned in column 1 are despatched daily to Colombo, so that they may proceed by any steamer that has been unusually accelerated or retarded, or by any special opportunity that may be afforded by a steamer not belonging to one of the regular lines.

† Correspondence for China and Japan is despatched daily to Colombo, so that they may proceed by the first steamer available.

1. The letter-box for Inland articles will be cleared for the forenoon Mails at the following hours :—
   For Goalundo, Arakan and Chittagong, at 5-30 A.M.
   For Midnapore and Orissa districts, at 8-30 A.M.
   For the Eastern districts, as far as Dacca and Mymensingh, at 6-30 A.M.
   For Khulna and Jessore districts, at 7-30 A.M.
   For Bombay, Central Provinces and Midnapore, *vid* Bengal-Nagpur Railway, at 10-45 A.M., and with a late fee of ½ anna up to 11-35 A.M.

2. The letter-box will be cleared for the evening Mails at the following hours, viz :—
   For the East Indian Railway Loop Mail, at 2-30 P.M., and with a late fee of ½ anna up to 2-55 P.M.
   For the Northern Bengal, Darjeeling and Assam Mails, at 3-25 P.M., and with a late fee of ½ anna up to 3-50 P.M.
   For the Bombay Mail, *vid* Jubbulpore, at 6 P.M., and with a late fee of ½ anna up to 6-30 P.M.
   For the Punjab Mail, at 7-30 P.M. }
   For Midnapore, Orissa and Madras Presidency, at 7-30 P.M. } and with a late fee of ½ anna up to 8 P.M. and
   For the Khulna Mail, at 7-30 P.M. } with a late fee of 1
   For the Eastern Bengal Mail, at 7-30 P.M. } anna up to 8-45 P.M.

3. Late registered letters will be received between the following hours :—
   For the Bombay Mail, *vid* Jubbulpore, from 5 P.M. to 6-15 P.M.
   For the Punjab Mail, from 6 P.M. to 7 P.M.
   For the Eastern Bengal Mail, from 6 P.M. to 7 P.M.
   For the Khulna Mail, from 6 P.M. to 7 P.M.
   For Midnapore, Orissa and the Madras Presidency, from 6 P.M. to 7 P.M.

NOTE.—The late fee on each registered letter will be 2 annas, which must be prepaid in stamps on the letter.

4. Articles for Burma and for Port Blair by sea are received without late fee up to 7-30 P.M., and with a late fee of ½ anna up to 8 P.M.

5. On the latest safe day of despatch of Mails for the Australasian Colonies, or any other Foreign Countries, *vid* Madras or Tuticorin, the letter box for Foreign articles will be cleared for the last time at 7-30 P.M., and late letters and papers fully prepaid will be received up to 8-45 P.M.

6. On the day of despatch of the Mail for Europe (Thursday), the letter-box for Foreign articles will be cleared for the last time, for articles, without the late fee, at 6-30 P.M., and late letters and papers fully prepaid will be received up to 6-45 P.M. Late registered articles will be received from 5 to 6 P.M. On other days the letter-box for Foreign articles will be cleared for the last time, without the late fee, at 6 P.M., and late letters and papers will be received up to 6-30 P.M. for despatch by any Foreign Mails, *vid* Bombay, the same night and up to 8-30 P.M., late letters and papers up to 9 P.M., for any Foreign Mails despatched by sea. Foreign Mails for despatch *vid* Madras or Tuticorin are received up to 7-30 P.M., and with a late fee up to 8-45 P.M. The late fee for Foreign articles is 4 annas, which must be prepaid in stamps affixed to the articles.

JOHN OWENS,
Presidency Postmaster.

CALCUTTA G. P. O.,
The 8th July 1902.

NADIA RIVERS.

Report showing the least depths of water for the week ending Friday, the 4th July 1902.

Name of river	Reach of river.	Least depth of water soundings. Ft.	In.	REMARKS.
Bhagirathi.	Entrance from Ganges	4	0	
	Thence to Geriah ..	2	3	Geriah.
	From Geriah to Jangipur ..	3	0	Nalakantopur.
	,, Jangipur to Berhampore	2	0	Berhampur.
	,, Berhampore to Katwa	1	6	Nagore.
	,, Katwa to Nadia .	3	0	Rajapur.
Bhyrub-Jalangi.	Entrance from Ganges ...	8	9	
	Thence to Akriganj ...	8	6	Chakharpara.
	Akriganj to junction of the Bhyrub and Jalangi	7	0	Horharia.
	Thence to Patkabari	8	0	Lalnagar.
	Patkabari to Nadia	7	0	Panditpur.
Mathabhanga.	Entrance from Ganges ...	3	8	
	Thence to Dewanganj	3	6	Jamalpur.
	From Dewanganj to Shikarpur	4	0	Meghna.
	,, Shikarpur to Boalia ...	4	0	Shamp r.
	,, Boalia to Chuadanga ...	5	0	Moheshpur.
	,, Chuadanga to Kissanganj and Hanskhali..	5	6	Raipur.

Gauge Readings.

	Locality.	Date.	Hour.	Height above zero.	Height above mean sea level.	REMARKS.
Ganges ...	Sahebganj ...	5-7-1902	A.M. 6	Ft. 7·16	Ft. 75·16	
	Rampur Boalia...	5-7-1902	Noon	6·18	48·18	
	Entrance of Bhagirathi Geriah ..	4-7-1902	A.M. 7	...	55·25	
	Entrance of Bhyrub Jalangi Akhriganj ...	6-7-1902	A.M. 7	...	44·25	
Bhagirathi.	Entrance of Mathabhanga ...	3-7-1902	...	6·33	...	
	Jangipur ...	5-7-1902	...	...	49·90	
	Berhampore ...	7-7-1902	A.M. 10	6·33	40·08	
	Katwa ..	3-7-1902	...	5·75	20·91	
Jalangi	Krishnagar ...	4-7-1902	...	5·58	...	
	Sarupganj ...	4-7-1902	Noon	...	6·20	
Mathabhanga.	Hanskhali ...	5-7-1902	P.M. 4	5·10	...	

A. K. BANERJEE, *Acctt.*,
For *Exe. Engr., Nadia Rivers Division.*

Berhampore, the 7th July 1902.

GOVERNMENT PUBLICATIONS FOR SALE

At the Bengal Secretariat Book Depôt, Writers' Buildings, Calcutta, and by the following Agents :—

AGENTS IN INDIA.

Messrs. Thacker, Spink & Co., Calcutta and Simla.
Messrs. Newman & Co., Calcutta.
Messrs. Higginbotham & Co., Madras.
Messrs. Thacker & Co., Ld., Bombay.
Messrs. A. J. Combridge & Co., Bombay.
Mr. E. Seymour Hale, 53 Esplanade Road, Fort, Bombay, and Calcutta.
The Superintendent, American Baptist Mission Press, Rangoon.
Rai Sahib M. Gulab Singh & Sons, Proprietors of the Mufid-i-am Press, Lahore, Punjab.
Messrs. S. K. Lahiri & Co., Printers and Booksellers, College Street, Calcutta.
Messrs. V. Kalyanarama Iyer & Co., Booksellers, &c. Madras.

AGENTS IN ENGLAND.

Mr. E. A. Arnold, 37 Bedford Street, Strand, London.
Messrs. Constable & Co., 2 Whitehall Gardens, London.
Messrs. Sampson Low, Marston & Co., St. Dunstan's House, Fetter Lane, London.
Messrs. Luzac & Co., 46 Great Russell Street, London.
Messrs. Kegan Paul, Trench, Trubner & Co., Charing Cross Road, London.
Mr. B. Alfred Quaritch, 15 Piccadilly, London.
Messrs. P. S. King & Son, 2 & 4 Great Smith Street, Westminister, London.
Messrs. H. S. King & Co., 65 Cornhill, London.
Messrs. Williams and Norgate, Oxford.
Messrs. Deighton Bell & Co., Cambridge.

AGENTS ON THE CONTINENT.

Messrs. R. Friedlander & Sohn, Berlin, N. W. Carlstrasse, 11.
Mr. Otto Harrassowitz, Leipzig.
Mr. Karl Hiersemann, Leipzig.
Mr. Ernest Leroux, 28 Rue Bonaparte, Paris.
Mr. Martinus Nijhoff, The Hague.

NOTICE.—Books required for private use can be purchased. Applications should be accompanied by a remittance, unless it is wished that the books should be sent by value-payable post, in which case, besides the ordinary postage, an additional charge will be made for registration and commission.

Books required for the Public Service should be obtained through the Heads of Departments.

☞ *The amounts within parentheses are for packing and postage.*

NEW PUBLICATIONS ISSUED DURING THE CURRENT QUARTER.

LEGISLATIVE DEPARTMENT.

The Bengal Vaccination Act, 1880 (Bengal Act V of 1880), as modified up to 1st June 1902. Royal 8vo. Paper cover. Price 4*a*. (1*a*.)

POLITICAL DEPARTMENT.

Administration Report on the Jails of Bengal for the year 1901. F'cap. Board. Paper cover. Rs. 3. (3*a*.)

REVENUE DEPARTMENT.

Season and Crop Report of Bengal for the year 1901-1902 F'cap. Paper cover. 8*a*. (1*a*.)

PUBLICATIONS ISSUED BETWEEN THE 1ST APRIL AND THE 30TH JUNE, 1902.

APPOINTMENT DEPARTMENT.

Quarterly Civil List of Bengal corrected up to 1st April 1902. Super-royal 8vo. Paper cover. Price Rs. 3. (4*a*.)

FINANCIAL DEPARTMENT.

The Stamp Manual, 1902. A Manual for the guidance of officers in the administration of the Stamp Department, Royal 8vo. Board. Paper cover. Price Re. 1-8. (6*a*.)

Annual Report on the consumption of Stationery in Bengal during 1900-1901. F'cap. Paper cover. *Rs.* 3. (2*a*.)

GENERAL DEPARTMENT.

List of Officers in the Subordinate Educational Service, Bengal, corrected up to 1st April 1902. F'cap. Paper cover. 8*a*. (1*a*.)

JUDICIAL DEPARTMENT.

Question Papers set at the Pleadership and Muktearship Examinations for the year 1902. Royal 8vo. Paper cover. Price 2*a*. (1*a*.)

Question Papers set at the Examination of candidates for appointment as Sub-Inspectors of Police. July and November 1901. Royal 8vo. Paper cover. Price 5*a*. (1*a*.)

Question Papers set at the Examination of candidates for recruiting the staff of Superior Police Officers in Bengal and Assam, held in November 1901. Royal 8vo. Paper cover. Price 8*a*. (1*a*.)

LEGISLATIVE DEPARTMENT.

The Court of Wards' Act, 1879 (Bengal Act IX of 1879), in Hindi, as modified up to the 1st July 1901. Royal 8vo. Paper cover. Price 6*a* (1*a*.)

The Calcutta Port Act, 1890 (Bengal Act III of 1890), as modified up to 1st April 1902. Royal 8vo. Paper cover. Price 10*a*. (1*a*.)

MUNICIPAL DEPARTMENT.

Annual Returns of the Lunatic Asylums in Bengal with brief notes for the year 1901. Compiled by the Inspector-General of Civil Hospitals. F'cap. Paper cover. Price Re. 1. (2*a.*)

Account Rules under the Local Self-Government Act, Part VIII. F'cap. Paper cover. Price 8*a.* (.)

Annual Report of the Chemical Examiner's Department, Bengal, 1901. F'cap. Paper cover Price 8*a.* (2*a.*)

PUBLIC WORKS DEPARTMENT.

Distribution Return of Officers and Subordinates employed on Local Works in Bengal, corrected up to 31st December 1901. Super-royal 8vo. Paper cover. Price 2*a.* (1*a.*)

Embankment and Drainage Report of the Government of Bengal, Irrigation Department, for the year 1900-1901. F'cap. Boards Paper cover. Price Rs. 2 (3*a.*)

Classified List and Distribution Return of Establishment corrected up to 31st March 1902. Super-royal 8vo. Paper cover. Price 4*a.* (1*a.*)

Dacca Electric Lighting License, 1902. F'cap. Paper cover. Price 14*a.* (1*a.*)

Notes on the construction of Railways in India (for students) with 5 charts. F'cap Paper cover. Price Re. 1. (1*a.*)

REVENUE DEPARTMENT.

Annual Report of the Burdwan Experimental Farm for the year 1900-1901. F'cap. Paper cover. Price 3*a.* (1*a.*)

Annual Report on the Survey Operations in Bengal during the year 1900-1901 (from 1st October 1900 to 30th September 1901). F'cap. Paper cover. Price Re. 1-8. (2*a.*)

Annual Report of the Director of the Department of Land Records, Bengal, on Settlements, for the year ending 30th September 1901. F'cap. Paper cover. Price 8*a.* (1*a.*)

ThePractice and Procedure Manual, published under the authority of the Board of Revenue. Royal 8vo. Board. Paper cover. Price 12*a.* (3*a*).

OLDER PUBLICATIONS.

A General Catalogue of all Government Publications (corrected up to 31st December, 1901) may be obtained *gratis* on application to the Officer in charge, Bengal Secretariat Book Depôt.

Publications for sale at the office of the Chief Inspector of Explosives with the Government of India.

Rules for the manufacture, possession and sale of explosives issued by each of the Local Governments and Administrations. Price 12*a.*

Rules for the transport and importation of explosives issued by the Government of India. Price 12*a.*

Rules for the transport and importation of explosives at the Port of Calcutta. Price 4*a.*

GOVERNMENT PUBLICATIONS FOR SALE

BY THE SUPERINTENDENT OF GOVERNMENT PRINTING, INDIA, 8 HASTINGS STREET, CALCUTTA.

[A General Catalogue of all Government Publications may be obtained gratis from the Government Central Press, Calcutta.]

All books published by the Superintendent of Government Printing, India, can be purchased, either directly or through the following or any other booksellers:—

AGENTS IN INDIA.

Messrs. Thacker, Spink & Co., Calcutta and Simla.
Messrs. Newman & Co., Calcutta.
Messrs. Higginbotham & Co., Madras.
Messrs. Thacker & Co., Ld., Bombay.
Messrs. A. J. Combridge & Co., Bombay
Messrs. V. Kalyanarama Iyer & Co., Madras.
Messrs. D. B. Taraporevala, Sons & Co., Bombay.
Superintendent, American Baptist Mission Press, Rangoon.
Rai Sahib M. Gulab Singh and Sons, Mufid-i-Am Press, Lahore.
Manager, Educational Book Depôts, Nagpur and Jubbulpore.*
Manager of the Imperial Book Depôt, 63 Chandni Chauk Street, Delhi.*

AGENTS IN EUROPE.

Mr. E. A. Arnold, 37 Bedford Street, Strand, London.
Messrs. Constable & Co., 2 Whitehall Gardens, London.
Messrs. Sampson Low, Marston & Co., St. Dunstan's House, Fetter Lane, London.
Messrs. Luzac & Co., 46 Great Russel Street, London.
Messrs. Kegan Paul, Trench, Trübner & Co., Charing Cross Road, London.
Mr. B. Alfred Quaritch, 15 Piccadilly, London.
Messrs. P. S. King and Son, 2 & 4 Great Smith Street, Westminster.
Messrs. H. S King & Co., 65 Cornhill, London, are also Agents for the sale of the Indian Army List.
Mr. Otto Harrassowitz, Mr. Karl Hiersemann } Leipzig.
Messrs. R. Friedlander & Sohn, Berlin, N. W. Carlstrasse, 11.
Mr. Ernest Leroux, 28 Rue Bonaparte, Paris.
Mr. Martinus Nijhoff, the Hague, Holland.
Messrs. Williams and Norgate, Oxford.
Messrs. Deighton Bell & Co., Cambridge.

* Agents for sale of the Legislative Department publications.

NOTICE.—Books and Acts required for private use only can be purchased. Applications should be accompanied by a remittance, unless it is wished that the books should be sent by value-payable post, in which case, besides the ordinary postage, an additional charge is made for registration and commission.

Books and Acts required for the public service should be obtained through Local Governments to whom the applicant is subordinate.

Applications for Government publications which are no longer in print should be made to the Agents of the particular Government under whose orders they were originally issued.

The amounts within parentheses are for packing and postage.

List of New Books published during the Current Quarter.

FINANCE AND COMMERCE DEPARTMENT.

List of Officers in the Finance and Commerce Department. Corrected to 1st May 1902. Royal 8vo. Paper cover. 4*a.* or 5*d.* (1*a*)

STATISTICAL DEPARTMENT.

Review of the Trade of India in 1901-1902. F'cap. Paper cover. 8*a.* or 9*d.* (2*a*)

List of Books published from January to June 1902.

LEGISLATIVE DEPARTMENT.

Chronological Tables of the Indian Statutes compiled, under the orders of the Government of India, by F. G. Wigley, Esq. Royal 8vo. Cloth. *Rs.* 4 or 6*s.* (7*a.*)

The Indian Penal Code (Act XLV of 1860), as modified up to the 1st July 1899, and with foot-notes brought down to 1st April 1901. *Re.* 1-8 or 3*s.* 9*d.* (6*a.*)

The Indian Factories Act, 1881, as modified up to the 1st April 1891 (with foot-notes brought down to 1st July 1901). 5*a.* 6*p.* or 6*d.* (1*s.* 6*p.*)

Effect of Legislation for 1898, 1899, and 1900. *Re.* 1 or 1*s.* 6*d.* (2*a.*)

Chronological Tables of the Indian Statutes, 1901. *Re.* 1 or 1*s.* 6*d.* (2*a.*)

A Digest of Indian Law Cases, Vol. III. Cloth bound. *Rs.* 12 or 18*s.* (10*a.*)

Ditto ditto ditto. Quarter bound. *Rs.* 13 or 19*s.* 6*d.* (10*a.*)

Act IX of 1901. An Act further to amend the Indian Articles of War. 1*a.* or 1*d.* (1*a.*)

Act X of 1901. An Act further to amend the Court-fees Act, 1870. 1*a.* 3*p* or 1*d.* (1*a.*)

Act XI of 1901. An Act to facilitate the citation of certain Enactments and to amend and repeal certain obsolete Enactments

Regulation III of 1901. A Regulation further to provide for the suppression of crime in certain frontier districts. 7*a.* 6*p.* or 9*d.* (1*a.* 6*p.*)

Regulation IV of 1901. A Regulation to make better provision for the suppression of murderous outrages in certain frontier tracts. 2*a.* 6*p.* (1*a.*)

Regulation V of 1901. A Regulation further to amend the Upper Burma Land and Revenue Regulation, 1899 1*a.* 9*p.* or 2*d.* (1*a.*)

Regulation VI of 1901. A Regulation to repeal so much as is unrepealed of the Punjab Frontier Regulation, 1872, and of the Hazara Settlement Rules, 1*a.* or 1*d* (1*a.*)

Regulation VII of 1901. A Regulation to alter certain of the laws in force in the North-West Frontier Province, to declare that certain Enactments are in force therein, and to bar the application of certain others hereto. 11*a.* or 1*s.* 3*d.* (2*a.*)

Corrigendum slip for Act XIII of 1900. 1*a*.

Title-page and Contents to Acts of 1901. 1*a*. 6*p*. (1*a*.)

Index to Acts of 1901. 2*a*. 9*p*. or 3*d* (1*a*.)

The European Vagrancy Act, 1874 (IX of 1874), as modified up to 1st December, 1901. 6*a*. 6*p*. or 7*d*. (1*a*.)

The Chaukidars Act, 1856 (XX of 1856), as modified up to 1st December, 1901. 7*a*. 6*p*. or 8*d*. (1*a*.)

The Registration of Ships Act, 1841 and 1850 (X of 1841 and XI of 1850), as modified up to 1st December 1893, and with foot-notes brought down to 1st December, 1901. 7*a*. or 7*d*. (1*a*.)

Table showing the effect of Legislation in the Governor-General's Council during 1901. 6*s*. or 6*d*. (1*a*.)

LIST OF TRANSLATIONS AND TRANSLITERATIONS OF ACTS PUBLISHED FROM 1ST OCTOBER 1901 TO 31ST MARCH 1902.

The Cattle-trespass Act, 1871 (I of 1871), as modified up to the 1st April 1901. In Urdu. 2*s*. (1*a*.)

Ditto. In Hindi. 2*a*. (1*a*.)

Act IX of 1901 (an Act further to amend the Indian Articles of War). In Urdu. 3*p*. (1*a*.)

Ditto. In Hindi. 3*p*. 1*a*.

Act X of 1901 (an Act further to amend the Court-fees Act, 1870). In Urdu 3*p*. (1*a*.)

Ditto. In Hindi. 3*p*. (1*a*.)

HOME DEPARTMENT.

Chronological Tables for 1902, embodying Notifications by the Government of Bengal and Government of India prescribing holidays during the year with corresponding dates in English, Bengali, Velati, Fusli, etc. Royal 8vo. Paper cover. 4*a*. or 4*d*. (1*a*.)

Annual Report of the Sanitary Commissioner with the Government of India, 1900, with Appendices and Returns of Sickness and Mortality among European Troops, Native Troops, and Prisoners in India, for the year. F'cap. Boards. *Rs*. 3 or 4*s*. 6*d*. (8*a*.)

Report of Proceedings of the Central Indigenous Drugs Committee of India, Volume I. Royal 8vo. Board. Rs. 3-8 or 5*s*. 3*d* (7*a*.)

List of Europeans and others in the English Factories in Bengal at the time of the Siege of Calcutta in the year 1756, with an appendix containing lists of European Sufferers. By S. Charles Hill, Esq., B.A., B.Sc. Super-Royal 4to. Paper cover. Rs 2 or 3*s*. (3*a*.)

Judicial and Administrative Statistics for British India. 6th issue, 1900-1901, and preceding years. F'cap. Board. Rs. 2 or 3*s*. (10*a*.)

The Countess of Dufferin's Fund Seventeenth Annual Report of the National Association for Supplying Female Medical Aid to the Women of India for the year 1901. Super-Royal 8vo. Re. 1 or 1*s*. 4*d*. (3*a*.)

DEPARTMENT OF REVENUE AND AGRICULTURE.

List of Officers in the Survey and other Scientific and Minor Departments subordinate to the Government of India in the Department of Revenue and Agriculture, corrected to 1st July 1901. Royal 8vo. Paper cover. 8*a*. or 9*d*. (2*a*.)

Report of the Committee on the Establishment of Co-operative Credit Societies in India. F'cap Paper cover. 4*a*. or 5*d*. (2*a*.)

Forest Flora of the School Circle, North-Western Provinces, being a descriptive list of the indigenous woody plants of the Saharanpur and Dehra Dun districts and the adjoining portions of the Tehri-Garhwal State in the North-Western Provinces, with Analyses. Double Crown. 16mo. Full cloth. Re. 1-8 or 2*s*. (3*a*.)

Archæological Exploration in Chinese Turkestan. By Dr. M. A. Stein. Royal 4to. Cloth. Rs. 4 or 6*s*. (4*a*.)

Land Revenue Policy of the Indian Government. Royal 8vo. Cloth. 10*a*. or 1*s*. (4*a*.)

FOREIGN DEPARTMENT.

Report on the Administration of the Baluchistan Agency for 1900-1901. Re. 1-8 or 2*s*. 3*d*. (3*a*.)

Report on the Administration of the Hyderabad Assigned Districts for the year 1900-1901. F'cap. Limp cover. Rs. 3-12 or 5*s*. 6*d*. (6*a*.)

Report on the Political Administration of the territories within the Central India Agency for 1900-1901. F'cap. Limp cover. *Re*. 1-8 or 2*s*. (3*a*.)

Annotated Returns of the Dispensaries in Central India for 1900. F'cap. Limp cover. *Re*. 1-8 or 2*s*. (3*a*.)

Report on the Administration of the Civil and Military Station of Bangalore for the year 1900-1901. F'cap. Board. 8*a*. or 9*d*. (2*a*.)

Grammar and Vocabulary of Waziri Pashto. By J. G. Lorimer, Esq., I.C.S. Royal 8vo. Board. Rs. 3 or 4*s*. 6*d*. (5*a*.)

FINANCE AND COMMERCE DEPARTMENT.

List of Officers in the Finance and Commerce Department. Corrected to December 1901; to April 1902 4*a* or 5*d*. (1*a*.) each.

Papers relating to the proposed Establishment of a Central Bank in India. F'cap. Board. Re. 1 or 1*s*. 6*d*. (4*a*.)

Administration Report of the Mint at Bombay and Calcutta for 1900-1901. F'cap. Paper cover. Re. 1 or 1*s*. 6*d*. (2*a*.)

Schedule IV of the Indian Tariff Act (VIII of 1878) of 1902. Royal 8vo. Stitched. 6*a*. or 6*d*. (1*a*.)

STATISTICAL DEPARTMENT.

Trade and Navigation Accounts of British India for the months of December 1901 to May 1902. Royal 8vo. Stitched. 8*a*. or 9*d*. (2*a*.) each.

Accounts of the External Land Trade of British India for the months of September 1901 to March 1902. Royal 8vo. Stitched. 8*a*. or 9*d*. (2*a*.) each.

Accounts relating to the Trade carried by Rail and River in India in the quarter ending September 1901. Compared with the corresponding periods of the years 1899 and 1900 No. 2 of 1901-1902. F'cap. Paper cover. 8*a*. or 9*d*. (2*a*.)

Ditto ditto ending December 1901. Compared with the corresponding periods of the years 1899 and 1900. No 3 of 1901-1902. F'cap. Paper cover. 8*a*. or 9*d*. (2*a*.)

Accounts of the Trade of the French Possessions in India in the year ending 31st March 1901, and the four preceding years. F'cap. Paper cover. 2*a* or 3*d*. (1*a*.)

Statistics of Cotton Spinning and Weaving in the Indian Mills in January, February, and March 1902; in the ten months, April 1901 to January 1902; in the eleven months, April 1901 to February 1902, and in the twelve months, April 1901 to March 1902. Compared with the corresponding period of 1899-1900 and 1900-1901. Royal 8vo. Stitched. 2*s*. or 2*d*. (1*a*.) each.

Accounts of the Trade of Aden in the year ending 31st March 1901, and the four preceding years. F'cap. Paper cover. 10*a*. or 1*s*. (2*a*.)

Accounts of the Trade of the Portuguese Possessions in India in the year 1899-1900 and the four preceding years. F'cap. Paper cover. 2*a*. or 3*d*. (1*a*.)

Prices and Wages in India. Nineteenth issue, 1902. Super-Royal 4to. Board. Re. 1-8 or 2*s* (9*a*.)

COMPTROLLER-GENERAL.

Finance and Revenue Accounts of the Government of India for 1900-1901. F'cap. Board. Rs. 2 or 3*s*. (8*a*.)

Appropriation Report on the Accounts of the Government of India for 1900-1901. By A. F. Cox, Esq. F'cap. Board. 8*a*. (5*a*).

MILITARY DEPARTMENT.

The Monthly Indian Army List for February to March, May, June 1902. Royal 8vo. Paper cover. Re. 1-8 or 2*s.* 3*d.* (4*a.*) each.

Return of Wrecks and Casualties in Indian Waters for the year 1900. F'cap. Stiff cover. 12*a.* or 1*s.* (3*a*)

Military Works Services Classified List and Distribution Return. Corrected up to 31st December 1901. Royal 8vo. Paper cover. 4*a.* or 6*d.* (1*a*)

Indian Military Budget Estimate for the year 1902-1903. F'cap. Board. Re. 1-8 or 2*s.* 3d. (8*a.*)

PUBLIC WORKS DEPARTMENT.

Public Works Department Classified List and Distribution Return of Establishment. Corrected up to 31st December 1901. Super-Royal 8vo. Paper cover. Rs. 2 or 3*s.* (4*a.*)

Classified List (Public Works Department), Subordinate Establishment. Corrected up to 31st December 1901. Super-Royal 8vo. Paper cover. 4*a.* or 4*d.* (1*a.*)

Budget Estimate of the Indo-European Telegraph Department for the year 1902-1903. F'cap. Paper cover. 8*a.* or 9*d.* (1*a.* 6*p.*)

Budget Estimate of the Indian Telegraph Department for the year 1902-1903. F'cap. Paper cover. 8*a.* or 9*d.* (1*a.* 6*p.*)

History of Services of the Officers of the Engineer, Accounts, and State Railway Revenue Establishments. Corrected to 31st December 1901. In two Volumes. Royal 8vo Board. Vol. I, Rs. 2-8 or 3*s.* 9*d.* (6*a.*). Vol. II Rs. 2-8 or 3*s.* 9*d.* (6*a.*). Complete, Rs. 5 or 7*s.* 6*d.* (9*a.*)

List of new books for sale at the Thomason College, Roorkee, which were not advertised before.

Roorkee Treatise on "Railways," 4th Edition, revised by F. Wolley Dod, F.C.H. Price, Rs. 3 per copy.

Roorkee Treatise on "Irrigation Works." By Lieutenant-Colonel J. Clibborn, I.S.C., B.A., L.C.E., C.I.E. Price, Rs. 9 per copy.

Roorkee Treatise on "Sanitary Engineering." Compiled by Lieutenant-Colonel J. Clibborn, I.S.C., B.A., L.C.E. C.I.E. Price, Rs. 4-8 per copy.

Roorkee Manual of "Applied Mechanics," Volume II. The stability of structures mostly by graphic methods, by Lieutenant-Colonel J. H. C. Harrison, R.E. Price, Rs. 8-2 per copy.

Roorkee Manual of Hydraulics Price per copy, Re. 1-4. (No. XIX, Elementary Treatise). By E. F. Tipple, Esq., B.A.

Designs for Wooden Bridges, together with rules for calculating the area of waterway, &c., and Plates. By late Rai Bahadur Kunhya Lal. Price per set, Rs. 4-2

Pamphlet on Examination for Acid Radicals: Tables giving Analysis of Acids. Price per copy, 8*a.*

Pamphlet on Examination for Acid Bases: Tables giving Analysis of Metallic Bases. Price, 8*a.* per copy.

Pamphlet on Note on Masonry Arches (College publication). Price, 1*a.* per copy.

Pamphlet on Small Direct Well Pumping Installations. Price, 4*a.* per copy.

Pamphlet on Experiments made on the passage of water through the sand of the Chenab River at the Khanki Weir. By Lieutenant-Colonel J. Clibborn, I.S.C., C.A., L.C.E., C.I.E. Price per copy, 12*a.*

Indian Household Account Book for a period of two years, comprising Daily Table Expense Account, Bread, Butter and Milk Account, Dhobey's Account, Servants' Wages Account, etc. Price, Rs. 3 per copy.

Cash must accompany order. Articles are sent by V.-P. P. to persons in Government employment only.

Application is to be made to the Curator, Thomason College Book Depôt, Roorkee.

Half-yearly list of new books and periodicals for sale at the Library of the Asiatic Society of Bengal, 57 Park Street, Calcutta.

ASIATIC SOCIETY'S PUBLICATIONS.

Proceedings Nos. 9 to 11 of 1901 and No. 1 of 1902, at 8*a.*

Journal, Part I, No. 2 of 1901, at Rs. 2.

" Part II, No. 2 of 1901, at Rs. 2.

" Part III, No. 2 of 1901, and Part III, No. 1 of 1902, at Rs. 2.

BIBLIOTHECA INDICA.

Upamitibhavaprapancha Katha. Fasc. 4 at 6*a.*

Catapatha Brahmana. Vol. I, Fasc. 5, at 6*a.*

Varsakriya Kaumudi. Fasc. 3 and 4, at 6*a.*

Nityacarapaddhati. Fasc. 2 and 3, at 6*a.*

Apastamba Sranta Sutra. Vol. III, Fasc. 16, at 6*a.*

Mahabhasyapradipodyota. Vol. II, Fasc. 2 and 3, at 6*a.*

Al-Muquddasai. (English.) Vol. I, Fasc. 2, at 12*a.*

NOTICE TO SUBSCRIBERS.

SUBSCRIBERS are hereby informed that, unless complain of non-receipt of any number is made to the Publisher of the series within three months of the date of publication, the benefits of the subscription rates for copies ost in transit will not be allowed, and full rates will be charged. The price per copy of each of the four series at subscription rates and at full rates is shown below —

	PER COPY. Subscription rate.					
	Town.			Mofussal.		
	Rs.	A.	P.	Rs.	A.	P.
Calcutta Series	0	8	9	0	10	3
Each of the Madras, Bombay and Allahabad Series ...	0	6	3	0	5	9

	Full rate.					
	Town.			Mofussal.		
	Rs.	A.	P.	Rs.	A	P
Calcutta Series	2	0	0	2	0	0
Each of the Madras, Bombay and Allahabad Series ...	1	0	0	1	0	0

The Indian Law Reports.

Published under Authority.

THE Indian Law Report published under the authority of the Governor-General in Council, appear in monthly parts, published as soon as possible after the first of each month at Calcutta, Madras, Bombay, and Allahabad, and comprise four series—one for the Calcutta High Court, a second for the Madras High Court, a third for the Bombay High Court, and a fourth for the Allahabad High Court. The cases heard by the Privy Council on appeal from each High Court are reported in the Series for that High Court. Cases heard by the Privy Council on appeal from Provinces in India not subject to any High Court are reported in the Calcutta Series.

The Calcutta Series is distributed by the Bengal Secretariat Book Depôt, and the Madras, Bombay, and Allahabad Series are distributed direct from Madras, Bombay, and Allahabad respectively.

In supersession of the previous advertisements, on and from the 1st January 1889 the terms of subscription and sale will be as follows for current issues as well as for back numbers of the reports from 1876:—

Terms of subscription payable annually in advance.

For the complete series, *including postage* (Inland rate) Rs. 22-8.

Ditto ditto (Overland rate) Rs. 28.

	Without postage.			With postage.		
	Rs.	A.	P.	Rs.	A.	P.
For the Calcutta Series	10	0	0	12	8	0
,, each of the Madras, Bombay, and Allahabad Series	6	0	0	7	0	0
,, a part of the Calcutta Series purchased separately (*inclusive of postage in India*)	...	...		2	0	0
,, a part of each of the Madras, Bombay, and Allahabad Series purchased separately (*inclusive of postage in India*)	.....			1	0	0

The following are the rates at which deductions will be made for parts out of print and at which duplicate copies will be supplied to subscribers when required in place of copies lost in transit, provided complaint of non-receipt is made to the Publisher within three months of the date of publication :—

	For town.			For mufassal.		
	Rs.	A.	P.	Rs.	A.	P.
For the Calcutta Series, per copy ...	0	8	9	0	10	3
,, each of the Madras, Bombay, and Allahabad Series, per copy ...	0	5	3	0	5	9
,, the Calcutta Series. For the year	7	2	6	8	6	3
,, each of the Madras, Bombay and Allahabad Series. For the year	4	4	0	4	11	3

Persons desiring to subscribe for or purchase the Report should apply to—

The Superintendent, Government Press, Madras.
,, Superintendent, Government Central Press, Bombay.
,, Curator of Government Books, North-Western Provinces and Oudh.
,, Officer in charge, Bengal Secretariat Book Depôt.

Orders and subscriptions for 1902 should be at once registered and remitted by money-order payable to the Treasurer, Bengal Secretariat, Calcutta.

ADVERTISEMENTS will be received for publication on the wrappers of the Indian Law Reports, Calcutta Series, at the following rates, payable in advance—

	One page.	Half page.	Quarter page.
	Rs.	Rs.	Rs.
For one issue ...	20	14	9
,, three issues ...	55	36	4
,, six ,, ...	100	68	45
,, nine ,, ...	145	96	64
,, twelve ,, ...	180	12	80

SEVERAL volumes of the BENGAL LAW REPORTS, from August 1868 to December 1875, and FULL BENCH RULINGS, Parts I and II, are available at the following rates:—

	Without postage.			With postage.		
	Rs.	A.	P.	Rs.	A.	P.
Benga Law Reports, for one year ... Single copies, Rs. 2 per copy.	0			22	8	0
Full Bench Rulings, Parts I and II ...	20	0	0	22	8	0

Obtainable at the Bengal Secretariat Book Depôt, Writers' Buildings, Calcutta.

Remittances to be forwarded to the Treasurer, Bengal Secretariat, Writers' Buildings, Calcutta.

The complete series of the INDIAN LAW REPORTS for the years 1876 to 1885, 1887, and 1890 to 1901 having now been reprinted, are available, and may be purchased for all the years, or any particular year, on application to the Officer in charge, Bengal Secretariat Book Depôt.

The wanting parts of the Reports for the remaining years are being reprinted, and complete Reports from the beginning to date will be available shortly. The subscription, Rs. 22-8 per annum, should be remitted in advance to the Treasurer, Bengal Secretariat.

Notice.

THE *CALCUTTA GAZETTE.*

The 1st March 1901.—From this date the subscription to, and postage for, the *Calcutta Gazette* will be at the following rates, payable in advance:—

PER ANNUM.	For Calcutta.		For the Mufassal, including postage.	
	Rs.	A.	Rs.	A.
Entire *Gazette*	15	0	20	0
Parts I, IA and IB together ...	5	0	7	8
Part II	1	0	2	12
Parts III, IV and IVA togother	4	0	6	0
,, V and VI together ..	2	0	3	0
Appendix (Marine Notifications)	1	0	2	12
Supplement	5	0	7	8
PER ISSUE.				
Entire *Gazette*	0	8	0	10
Supplement	0	4	0	5

N. B.—Separate Parts of each issue of the *Gazette*, and occasionally important Rules and Extracts, can be obtained from the Officer in charge, Bengal Secretariat Book Depôt, at the rate of one anna for every sixteen pages or a fraction thereof. Postage according to weight.

RATES FOR ADVERTISEMENTS in the *Calcutta Gazette*:—

Full page, per issue ... ... Rs. 20
Half ,, ,, ,, ... ,, 10

Casual advertisements, 4 annas per line.

Annual Statement of the Sea-borne Trade and Navigation of the Bengal Presidency and of its Chief Port (Calcutta), and each of its Subordinate Ports Chittagong, Balasore, Cuttack, Pooree, and Narainguge), Volumes I and II. Price Rs. 20 for 1899-1900. Published at the Calcutta Custom House Previous years' volumes can also be obtained at the same price.

The Calcutta Gazette.

PUBLISHED BY AUTHORITY.

WEDNESDAY, JULY 9, 1902.

☞ Separate paging is given to this Part in order that it may be filed as a separate compilation.

PART V.

Acts of the Governor General's Council assented to by the Governor General.

GOVERNMENT OF INDIA.

LEGISLATIVE DEPARTMENT.

The following Act of the Governor General of India in Council received the assent of the Governor General on the 27th June, 1902, and is hereby promulgated for general information :

ACT NO. IX OF 1902.

An Act to amend the Indian Paper Currency Act, 1900.

WHEREAS it is expedient to amend the Indian Paper Currency Act, 1900; It is hereby enacted as follows : VIII of 1900.

1. This Act may be called the Indian Paper Currency Act, 1902. Short title.

2. Section 1, sub-section (3), and section 3 of the Indian Paper Currency Act, 1900, are hereby repealed. Repeal of section 1 (3) and section 3, Act VIII of 1900. VIII of 1900.

J. M. MACPHERSON,

Secretary to the Government of India.

GOVERNMENT OF BENGAL—MARINE DEPARTMENT.

NOTICE TO MARINERS—No. 192.

[First Publication.]

PACIFIC OCEAN—Fiji islands.

Wailagilala—The light replaced.

With reference to Notice to Mariners No. 58, dated the 8th March 1902, issued by this office, the Acting Receiver-General, Suva, has given further notice that on the 10th April 1902 the Catoptric Light at Wailagilala (latitude 16° 45′ S., longitude 179° 6′ W.) was replaced by a Fourth Order White Dioptric Fixed Light, which is visible between the magnetic bearings of N. 64° E. through N. to S. 42° W.

The height of the light is 95 feet above high-water level.

E. J. Beaumont, Comdr., r.i.m.,
Port Officer of Calcutta.

Published for general information.

C. B. Bayley,
Asst. Secy., Marine Department.

Calcutta, *the 30th June 1902.*

GOVERNMENT OF BENGAL—MARINE DEPARTMENT.

NOTICE TO MARINERS—No. 193.

[First Publication.]

PACIFIC OCEAN—Fiji islands.

Wakaya reef—Light-house erected.

With reference to Notice to Mariners No. 131, dated the 13th May 1902, issued by this Office, the Acting Receiver-General, Suva, has given further notice that a new wooden structure has been erected on the south point of the Wakaya reef. The height of the building is 83 feet above low-water level.

The light will be a Third Order White Dioptric, visible round an arc of the horizon of 230° to the southward.

It is expected that the light will be installed about 31st July 1902, due notice of which will be given.

E. J. Beaumont, Comdr., r.i.m.,
Port Officer of Calcutta.

Published for general information.

C. B. Bayley,
Asst. Secy., Marine Department.

Calcutta, *the 30th June 1902.*

GOVERNMENT OF BENGAL—MARINE DEPARTMENT.

NOTICE TO MARINERS—No. 194.

[First Publication.]

INDIA, SOUTH-EAST—Ceylon coast.

Chuttram—A fixed white light exhibited from a mast.

The Presidency Port Officer, Madras, has given notice (No. 37 of 1902) that from and after 1st September 1902, a fixed white light, visible from all directions seawards, will be exhibited from a mast near "Chuttram" in longitude 80° 37′ and latitude 9° 12′ as a guide to vessels making the port of Pámban from the south.

E. J. Beaumont, Comdr., r.i.m.,
Port Officer of Calcutta.

Published for general information.

C. B. Bayley,
Asst. Secy., Marine Department.

Calcutta, *the 30th June 1902.*

GOVERNMENT OF BENGAL—MARINE DEPARTMENT.

NOTICE TO MARINERS—No. 195.

[First Publication.]

NEW ZEALAND—North island, east coast.

Poverty bay—Position of Hawea buoy altered.

With reference to Notice to Mariners No. 94, dated 12th April last, issued by this office, the British Admiralty has given further notice (No. 336 of 1902) that on 24th April 1902, the red buoy marking Hawea rock, Poverty bay, would be moved about 2¼ cables S. 46° E. to a position southward of the rocks recently discovered from which Gisborne flagstaff bears No. 4° E., distant 12$\frac{8}{10}$ cables, and Pah hill N. 65° E.

Approximate position of Gisborne flagstaff, lat. 38° 39¾′ S., long. 178° 2½′ E.

(*Variation 14° Easterly in 1902.*)

This Notice affects the following Admiralty Chart:—Poverty Bay, No. 6163: Also, New Zealand Pilot, 1901, page 150.

E. J. Beaumont, Comdr., r.i.m.,
Port Officer of Calcutta.

Published for general information.

C. B. Bayley,
Asst. Secy., Marine Department.

Calcutta, *the 5th July 1902.*

GOVERNMENT OF BENGAL—MARINE DEPARTMENT.

NOTICE TO MARINERS—No. 196.

[First Publication.]

CHINA—Hong Kong.

Lye mun point—Position of light. Hong Kong harbour—Prohibited anchorage.

With reference to Notice to Mariners No. 68, dated the 10th March last, issued by this office, the British Admiralty has given further notice (No. 337 of 1902) that the position of the *fixed red* light, exhibited from a gibbet on the shore near Lye mun point, is 3¼ cables N. 72° E. from Kung am.

Approximate position, lat. 22° 17½′ N., long. 114° 14½′ E.

Also, that anchorage is prohibited in the vicinity of the telegraph cable crossing the harbour from near the Admiralty Dock at Kaulung to a position west of north point Hong Kong. The prohibited area is marked by beacons which have been moved as under:—

At Kaulung—
The eastern beacon has been shifted 300 feet S. 79° E. from its former position.
The western beacon has been shifted 540 feet S. 72° W. from its former position.

At Hong Kong—
The eastern beacon has been moved 310 feet N. 55° E. from its former position.
The western beacon remains unaltered.

The red lights exhibited from these beacons are screened as before, viz., so that when two lights on the same side of the harbour are visible anchorage is prohibited.

Approximate position, lat. 22° 18′ N., long. 114° 10′ E.

(*Variation 1° Easterly in 1902.*)

This Notice affects the following Admiralty Charts:—Hong Kong, Nos. 1459, 1466: Also, List of Lights, part VI, 1902, Nos. 705, 706, page 127; China Sea Directory, vol. III, 1894, pages 77, 82, 83; and Supplement, 1898, page 9.

E. J. Beaumont, Comdr., r.i.m.,
Port Officer of Calcutta.

Published for general information.

C. B. Bayley,
Asst. Secy., Marine Department.

Calcutta, *the 5th July 1902.*

GOVERNMENT OF BENGAL—MARINE DEPARTMENT.

NOTICE TO MARINERS—No. 197.

[First Publication.]

PACIFIC OCEAN—PHILIPPINE ISLANDS, MINDANAO, SOUTH COAST.

Sibuguei and Dumankilas bays—Shoals.

WITH reference to Notice to Mariners No. 249, dated 28th September 1900, issued by this office, the British Admiralty has given further notice (No. 340 of 1902) that a shoal was seen about 3 miles N. 67° W. from Circe shoal in the entrance to Sibuguei bay.

Approximate position, lat. 7° 19′ N., long. 122° 36′ E.

It has been placed on the Charts as a rock with less than 6 feet over it.

Also, that four shoals, with apparently (for they were not examined) depths of 2 to 4 fathoms over them, were observed between Arayat shoal and point Dumankilas.

Approximate position, point Dumankilas, lat. 7° 28′ N., long. 123° 11′ E.

Approximate position, Arayat shoal, lat. 7° 16′ N., long 122° 57′ E.

A note to this effect has been placed on the Chart.

(Variation 1° Easterly in 1902)

This Notice affects temporarily the following Admiralty Charts:—The Philippine islands, No. 943; Sulu sea, No. 2578: Also, Eastern Archipelago, part I, 1890, pages 356, 357, 358; and Revised Supplement, 1898, page 69.

E. J. BEAUMONT, COMDR., R.I.M.,
Port Officer of Calcutta.

Published for general information.

C. B. BAYLEY,
Asst. Secy., Marine Department.

CALCUTTA, *the 5th July 1902.*

GOVERNMENT OF BENGAL—MARINE DEPARTMENT.

NOTICE TO MARINERS—No. 198

[First Publication.]

AUSTRALIA, SOUTH—ST. VINCENT GULF.

Port Adelaide and Glenelg jetty lights—Alterations postponed.

WITH reference to Notice to Mariners No. 8, dated 6th January 1902, issued by this office, the British Admiralty has given further notice (No. 341 of 1902) that the alterations contemplated in the lights at Semaphore jetty and Glenelg have been postponed, and that the *green fixed* light on the end of the Semaphore jetty and the *red fixed* light at the end of Glenelg jetty, port Adelaide, will continue to be exhibited until further Notice.

Approximate position, Semaphore jetty, lat. 34° 51′ S., long. 138° 29′ E.

This Notice affects the following Admiralty Charts:—St. Vincent and Spencer gulfs, Nos. 2389a, 2389b; approaches to port Adelaide, No. 1752; port Adelaide, No. 1750: Also, List of Lights, part VI, 1902, Nos. 1075, 1076; Australian Directory, vol. I, 1897, pages 326 and 324.

E. J. BEAUMONT, COMDR., R.I.M.,
Port Officer of Calcutta.

Published for general information.

C. B. BAYLEY,
Asst. Secy., Marine Department.

CALCUTTA, *the 5th July 1902.*

GOVERNMENT OF BENGAL—MARINE DEPARTMENT.

NOTICE TO MARINERS—No. 199.

[First Publication.]

BAY OF BENGAL—CHITTAGONG COAST.

Karnatuli river—Dolphin shoal buoy adrift.

A TELEGRAPHIC communication has been received from the Port Officer, Chittagong, stating that Dolphin shoal buoy has gone adrift. It will be replaced shortly.

E. J. BEAUMONT, COMDR., R.I.M.,
Port Officer of Calcutta

Published for general information.

C. B. BAYLEY,
Asst. Secy., Marine Department.

CALCUTTA, *the 5th July 1902.*

GOVERNMENT OF BENGAL—MARINE DEPARTMENT.

NOTICE TO MARINERS—No. 200.

[First Publication.]

BAY OF BENGAL—Burma coast.

Rangoon river—Extension of the Middle Bank.

The Bombay Government has given notice (No. 70 of 1902) that the Middle Bank has extended into the Channel between the Upper and Centre Buoys as under:—

(*a*) 18 feet reduced is 600 feet outside a line drawn between the above buoys.
(*b*) 14 feet reduced is 300 feet outside the above line.
(*c*) The extension is about half way between the above buoys and will be marked on 3rd or 4th June 1902 by a red conical buoy with a Staff and St. George's Cross moored between the Upper and Centre Middle Bank Buoys.

This Notice affects the Admiralty Chart:—Rangoon River and Approaches, No. 833, and Bay of Bengal Pilot, 3rd Edition, 1901, page 352.

E. J. Beaumont, Comdr., r.i.m.,
Port Officer of Calcutta.

Published for general information.

C. B. Bayley,
Calcutta, *the 5th July 1902.* *Asst Secy., Marine Department.*

GOVERNMENT OF BENGAL—MARINE DEPARTMENT.

NOTICE TO MARINERS—No. 201.

[First Publication.]

INDIA, WEST—Sind coast.

Karachi harbour—Breakwater light extinguished.

The Bombay Government has given notice (No. 71 of 1902) that the fixed red light shown from the outer end of the Breakwater on Manora Point has been temporarily extinguished.

This Notice affects the Admiralty Chart:—Karachi Harbour, No. 40, and West Coast of Hindustan Pilot, 4th Edition, 1898, page 303.

E. J. Beaumont, Comdr., r.i.m.,
Port Officer of Calcutta.

Published for general information.

C. B. Bayley,
Calcutta, *the 5th July 1902.* *Asst. Secy., Marine Department.*

GOVERNMENT OF BENGAL—MARINE DEPARTMENT.

NOTICE TO MARINERS—No. 184.

[Second Publication.]

AFRICA, EAST COAST—Port Mombasa.

Light established on leading beacon.

The British Admiralty has given notice (No. 304 of 1902) that on 10th April 1902, a *red fixed* dioptric light, elevated 68 feet above high water, and visible from a distance of 7 miles from the bearing of S. 60° W., through west and north, to N. 20° E., would be exhibited from the front or south-eastern black and white pillar on Ras Serani, port Mombasa.

This light in line with the white fixed light exhibited from the rear pillar, N. 51° W., leads through the fairway into the port.

Approximate position, lat. 4° 4½′ S., long. 39° 41′ E.

(*Variation 8° Westerly in 1902.*)

This Notice affects the following Admiralty Chart:—Port Mombasa, No. 866; Africa, List of Lights, part VI, 1902, page 18; Africa Pilot, part III, 1897, page 491; and Supplement, 1900, page 31.

E. J. Beaumont, Comdr., r.i.m.,
Port Officer of Calcutta.

Published for general information.

C. B. Bayley,
Calcutta, *the 28th June 1902.* *Asst. Secy., Marine Department.*

GOVERNMENT OF BENGAL—MARINE DEPARTMENT.

NOTICE TO MARINERS—No. 185.

[Second Publication.]

AUSTRALIA, WEST—FREMANTLE.

Intended alteration in lights.

THE British Admiralty has given notice (No. 305 of 1902) that it is proposed to make the following alterations in the lights exhibited on the North and South breakwaters, Fremantle:—

(1) The white fixed light on the North breakwater will be altered to a *green fixed* light, elevated 46 feet above high water, and visible in clear weather from a distance of 12 miles. The light will be of the 4th order, and shown from an iron cylindrical tower, painted white.

(2) The light on the South breakwater will be altered to a *white occulting* light *every five seconds*, thus:—light, *three seconds;* eclipse, *two seconds;* and it will be elevated 44 feet above high water. The light will be dioptric of the 4th order, and shown from a cylindrical tower painted white.

Approximate position, lat. 32° 3′ S, long. 115° 44′ E.

Further notice will be given when these alterations are made.

This Notice affects the following Admiralty Charts:—Rottnest island to Warnbro' sound, No. 1058; Fremantle harbour, No. 1700: Also, List of Lights, part VI, 1902, Nos. 1041a, b; Australia Directory, vol. III, 1895, page 362; and Supplement, 1898, page 8.

E. J. BEAUMONT, COMDR., R.I.M.,
Port Officer of Calcutta.

Published for general information.

C. B. BAYLEY,
CALCUTTA, *the 28th June 1902.* *Asst. Secy., Marine Department.*

GOVERNMENT OF BENGAL—MARINE DEPARTMENT.

NOTICE TO MARINERS—No. 186.

[Second Publication.]

KOREA, SOUTH COAST—SHADWELL GULF.

A rock in approach.

THE British Admiralty has given notice (No. 311 of 1902) of the existence of a rock, with a depth of 3 feet over it off the southern coast of Shadwell peninsula, situated with the western extreme of the south-western island of the Cho Do group (352 feet) bearing S. 11° W., distant 6 cables, and the island summit (365 feet) S. 68° E. This rock is about 20 yards long, N. 11° W. and S. 11° E., and 5 yards broad.

Approximate position on Chart No. 2972, lat. 34° 45′ N., long. 128° 23½′ E.

(*Variation 4° Westerly in 1902.*)

This Notice affects the following Admiralty Charts:—Korean archipelago, No. 164; Shadwell and Cargodo gulf, No. 2972: Also, China Sea Directory, vol. IV, 1894, page 116 and Supplement, 1898, page 6.

E. J. BEAUMONT, COMDR., R.I.M.,
Port Officer of Calcutta.

Published for general information.

C. B. BAYLEY,
CALCUTTA, *the 28th June 1902.* *Asst. Secy., Marine Department.*

GOVERNMENT OF BENGAL—MARINE DEPARTMENT.

NOTICE TO MARINERS—No. 187.

[Second Publication.]

AFRICA, NORTH-EAST—Red sea, Arabian coast.

Yenbo approach—Schermo and Thetis reefs marked by approach.

The British Admiralty has given notice (No. 324 of 1902) that beacons have been erected on Schermo and Thetis reefs in the approach to Yenbo.

The beacon on Schermo reef consists of an iron column on a masonry base, the whole surmounted by a ball 30 feet above the sea.

Approximate position, lat. 24° 5′ N., long. 37° 51½′ E.

The beacon on Thetis reef is of similar structure, but the height of the ball is only 10 feet above the sea.

Approximate position, lat. 23° 39′ N., long. 38° 2′ E.

This Notice affects the following Admiralty Chart:—Red sea, No. 8b: Also, Red Sea, &c., Pilot, 1900, pages 260, 263.

E. J. Beaumont, Comdr., r.i.m.,
Port Officer of Calcutta.

Published for general information.

C. B. Bayley,
Asst. Secy., Marine Department.

Calcutta, *the 28th June 1902.*

GOVERNMENT OF BENGAL—MARINE DEPARTMENT.

NOTICE TO MARINERS—No. 188.

[Second Publication.]

EASTERN ARCHIPELAGO—Tenimber islands.

Selaru—Reef reported to the north-westward.

The British Admiralty has given notice (No. 328 of 1902) that the Master of the S.S. *Generaal Pel* reports the existence of a reef situated with the western point of Selaru island bearing S. 18° W. and the northern extreme of the same island S. 84° E.

Approximate position, lat. 8° 4′ S., long. 130° 51′ E.

(*Variation 2° Easterly in 1901.*)

This Notice affects the following Admiralty Chart:—Eastern Archipelago, No. 942b; Also, Eastern Archipelago, part I, 1890, page 457.

E. J. Beaumont, Comdr., r.i.m.,
Port Officer of Calcutta.

Published for general information.

C. B. Bayley,
Asst. Secy., Marine Department.

Calcutta, *the 28th June 1902.*

GOVERNMENT OF BENGAL—MARINE DEPARTMENT.

NOTICE TO MARINERS—No. 189.

[Second Publication.]

AUSTRALIA, WEST.

Position of floating derelict vessel.

The Acting Port Master, Brisbane, has given notice (No. 4 of 1902) that the Master of the steamer *St. Mary* reports that, on the eleventh of May last, he fell in with an abandoned barque named the *Geertruda Garanda*, dismasted, in the following approximate position, viz.—

Latitude	...	...	...	33° 20′ South.
Longitude	...	...	...	100° 46′ East

E. J. Beaumont, Comdr., r.i.m.,
Port Officer of Calcutta.

Published for general information.

C. B. Bayley,
Asst. Secy., Marine Department.

Calcutta, *the 28th June 1902.*

GOVERNMENT OF BENGAL—MARINE DEPARTMENT.

NOTICE TO MARINERS—No. 173.

[Third Publication.

AUSTRALIA, WEST—KING SOUND APPROACH.

Pitts' reef and Anchor bank—Particulars given.

WITH reference to Notice to Mariners No. 230, dated 27th July 1901, issued by this Office, the British Admiralty has given further notice (No. 286 of 1902) :—

The following information, dated 10th April 1902, has been received from Mr. F. Pitts, Master, S.S. *Sultan*, respecting the undermentioned shoals in the approach to King sound.

(*a*) A shoal, now named Pitts' shoal, about 3 miles long and with an estimated depth of 5 feet over it, exists in a position from which Cape Lévêque bears S. 9° E., distant 8 miles.

Approximate position, lat. 16° 14¾′ S., long. 122° 54½′ E.

CAUTION.—The leading mark for clearing Ferret bank (summit of High island in line with South Twin islet E. by S. ½ S.) leads close to the position of this rock and must in consequence no longer be used.

(*b*) Anchor bank is stated to dry 2 feet at low-water springs.

Approximate position, lat. 16° 19′ S., long. 123° 7′ E.

(*Variation 1° Easterly in 1902.*)

This Notice affects the following Admiralty Charts :— Cape Ford to Buccaneer archipelago, No. 1047 ; Buccaneer archipelago to Bedout island, No. 1048 ; Hall Point to Cape Bertholet, No. 1052 : Also, Australia Directory, vol. III, 1895, page 229.

E. J. BEAUMONT, COMDR., R.I.M.,
Port Officer of Calcutta.

Published for general information

C. B. BAYLEY,
CALCUTTA, *the 20th June 1902.* *Asst. Secy., Marine Department.*

GOVERNMENT OF BENGAL—MARINE DEPARTMENT.

NOTICE TO MARINERS—No. 174.

[Third Publication.]

KOREA, WEST COAST—PING YANG INLET APPROACH.

Naniwa shoal—Extension reported.

THE British Admiralty has given notice (No. 287 of 1902) of the existence of a sandbank, with a depth of 4½ fathoms over it, in the approach to Ping Yang inlet, situated with Sei tau, bearing S. 19° W., distant 4$\frac{8}{10}$ miles, and So sha ki S. 34° E.

Approximate position on Chart No. 1656, lat. 38° 36½′ N., long 124° 47½′ E.

This danger is connected with Naniwa shoal and the shoals to the north-eastward by depths of from 3 to 4½ fathoms.

(*Variation 4° Westerly in 1902.*)

This Notice affects the following Admiralty Charts :—Approaches to Ping Yang inlet, No. 1257 ; Ping Yang inlet, No. 1656 : Also, China Sea Directory, vol. IV, 1894, page 41 ; and Supplement, 1898, page 3.

E. J. BEAUMONT, COMDR., R.I.M.,
Port Officer of Calcutta.

Published for general information.

C. B. BAYLEY,
CALCUTTA, *the 20th June 1902.* *Asst. Secy., Marine Department.*

GOVERNMENT OF BENGAL—MARINE DEPARTMENT.

NOTICE TO MARINERS—No. 175.

[Third Publication.]

AUSTRALIA, WEST—GASCOYNE RIVER.

Babbage island—Character of light.

WITH reference to Notice to Mariners No. 173, dated 13th August 1898, issued by this Office, the British Admiralty has given further notice (No. 290 of 1902) that the light on Babbage island has been permanently altered to a *fixed* light: in other respects, however the light remains as before.

Approximate position, lat. 24° 52½′ S., long. 113° 38¾′ E.

This Notice affects the following Admiralty Charts:—Cape Cuvier to Champion bay, No. 1056 · Shark bay, No. 518; South Bejaling to Gascoyne road, No. 718: Also, List of Lights, part VI, 1902, No. 1028; Australia Directory, vol. III., 1895, page 312; and Supplement, 1898, page 6.

E. J. BEAUMONT, COMDR., R.I.M.,
Port Officer of Calcutta.

Published for general information.

C. B. BAYLEY,
Asst. Secy., Marine Department.

CALCUTTA, *the 20th June 1902.*

GOVERNMENT OF BENGAL—MARINE DEPARTMENT.

NOTICE TO MARINERS—No. 176.

[Third Publication.]

KOREA, EAST COAST—COMMEMORATION BAY.

Rock in approach.

THE British Admiralty has given notice (No. 292 of 1902) that the Master of the S.S. *Okunimaru* reports that his vessel struck on a rock, with an estimated depth of 12 feet over it, in the southern approach to Commemoration bay (Urusan ko).

Approximate position, lat. 35° 21′ N., long. 129° 28′ E.

This danger has been placed on the Charts as a rock with less than 6 feet over it and marked P. D.

This Notice affects the following Admiralty Chart:—Japan, No. 2347: Also, China Sea Directory, vol. IV, 1894, page 138; and Supplement, 1898, page 7.

E. J. BEAUMONT, COMDR., R.I.M.,
Port Officer of Calcutta.

Published for general information.

C. B. BAYLEY,
Asst. Secy., Marine Department.

CALCUTTA, *the 20th June 1902.*

GOVERNMENT OF BENGAL—MARINE DEPARTMENT.

NOTICE TO MARINERS—No. 177.

[Third Publication.]

JAPAN—YEZO, SOUTH COAST.

Fukushima and Fukuyama bays—Rocks.

THE British Admiralty has given notice (No. 293 of 1902) of the existence of the undermentioned dangers in Fukushima and Fukuyama bays:—

(1) A rock, with a depth of 2¾ fathoms over it, situated with Sirakami saki light-house, bearing S. 38° W., distant 3$\frac{9}{10}$ miles, and Miyanouta stream N. 64° W.

(2) A rock, named Benkei iso, with a depth of 1½ fathoms over it, is situated at a distance of 4$\frac{4}{10}$ cables N. 39° E. from the above rock. The five-fathom contour line extends about one cable to the eastward from Benkei iso.

(3) A rock, with a depth of 4¾ fathoms over it, situated with Fukuyama light-house (Benten shima), bearing N. 6° E., distant 3½ cables, and Sirakami saki light-house S. 73° E.

Approximate position, Sirakami light-house, lat. 41° 24′ N., long. 140° 12′ E.

(Variation 5° Westerly in 1902.)

This Notice affects the following Admiralty Chart:—Tsugaru strait, No. 2441: Also, China Sea Directory, vol. IV, 1894, page 568.

E. J. BEAUMONT, COMDR., R.I.M.,
Port Officer of Calcutta.

Published for general information.

C. B. BAYLEY,
Asst. Secy., Marine Department.

CALCUTTA, *the 20th June 1902.*

GOVERNMENT OF BENGAL—MARINE DEPARTMENT.

NOTICE TO MARINERS—No. 178.

[Third Publication.]

JAPAN, SOUTH COAST—Kii.

Fuku ura—Shirukuboshi and Benzodashi Rocks.

The British Admiralty has given notice (No. 294 of 1902) of the existence of the undermentioned rocks in Fuku ura:—

(1) A rock, named Shirukuboshi, with a depth of 3¾ fathoms over it, situated with Kamekoshi, bearing N. 61° W., distant 7 cables, and western extreme of Flat head S. 5° W.

Approximate position, lat. 33° 28¼′ N., long. 135° 45¼′ E.

(2) A rock, named Benzodashi, with a depth of 1¾ fathoms over it, is situated at a distance of $1\frac{6}{10}$ cables N. 22° E. from Shirukuboshi.

These two rocks are connected by a ledge on which there is a depth of less than 4¾ fathoms.

Note.—There are two clusters of rocks at the head of the bay, north-eastward of the above position, which have the above names affixed to them on the Chart. These names should be expunged.

(*Variation 4° Westerly in 1902.*)

This Notice affects the following Admiralty Charts:—Kii channel to Owasi bay, No. 951; plan of Oosima harbour on Chart No. 356: Also, China Sea Directory, vol. IV, 1894, page 261.

E. J. Beaumont, Comdr., R.I.M.,
Port Officer of Calcutta.

Published for general information.

C. B. Bayley,
Asst. Secy., Marine Department.

Calcutta, *the 20th June 1902.*

GOVERNMENT OF BENGAL—MARINE DEPARTMENT.

NOTICE TO MARINERS—No. 179.

[Third Publication.]

JAPAN—Yezo island.

La Perouse strait—Rock reported in approach to.

The British Admiralty has given notice (No. 295 of 1902) that the Master of the S. S. *Hidakamaru* reports that his vessel struck on a rock in the eastern approach to La Perouse strait, off the north-east coast of Yezo, in approximately lat. 45° 20¾′ N., long. 142° 22′ E.

"A rock reported hereabouts" has been placed on the Charts in the above position.

This Notice affects the following Admiralty Chart:—Yezo island, No. 452: Also, China Sea Directory, vol. IV, 1894, page 587.

E. J. Beaumont, Comdr., R.I.M.,
Port Officer of Calcutta.

Published for general information.

C. B. Bayley,
Asst. Secy., Marine Department.

Calcutta, *the 20th June 1902.*

GOVERNMENT OF BENGAL—MARINE DEPARTMENT.

NOTICE TO MARINERS—No. 180.

[Third Publication.]

PACIFIC OCEAN—(South).

Tuamotu or Low archipelago—Reef reported to the southward.

The British Admiralty has given notice (No. 296 of 1902) that the Captain of the French vessel *Earnest Legouvé* reports that he passed on December 17th, 1901, 4 P.M., a reef about 100 yards long, in approximately lat. 35° 14′ S., long. 152° 58′ W.; and at 4-20 P.M. another reef was observed ahead. On going about the reef first sighted was seen to be breaking.

A reef marked Earnest Legouvé has been placed on the Charts in this position.

This Notice affects the following Admiralty Chart:—Pacific Ocean, Nos. 2683, 788, 783: Also, Pacific Islands, vol. III, 1900, page 27.

E. J. Beaumont, Comdr., R.I.M.,
Port Officer of Calcutta.

Published for general information.

C. B. Bayley,
Asst. Secy., Marine Department.

Calcutta, *the 20th June 1902.*

GOVERNMENT OF BENGAL—MARINE DEPARTMENT.

NOTICE TO MARINERS—No. 181.

[Third Publication.]

AUSTRALIA—QUEENSLAND, INNER ROUTE.

Trinity bay—Non-existence of shoal—Near course recommended.

WITH reference to Notice to Mariners No. 27, dated 4th February 1902, issued by this Office, the British Admiralty has given further notice (No. 297 of 1902) that further information, dated 3rd February 1902, has been received from Commander C. E. Monro, H.M. surveying vessel *Dart*, that, after ineffectually searching for the two shoals of 5¼ fathoms in the approach to Trinity bay about 2 miles south-westward of the track recommended, he is convinced that they do not exist, and that it is probable some mistake occurred on the part of the leadsman calling the soundings. They have therefore been expunged from the Charts.

Approximate position, lat. 16° 35′ S., long. 145° 43½′ E.

This Notice affects the following Admiralty Chart:—Cape Grafton to Hope islands, No. 2924: Also, Australian Directory, vol. II, 1898, page 336.

E. J. BEAUMONT, COMDR., R.I.M.,
Port Officer of Calcutta.

Published for general information.

C. B. BAYLEY,
Asst. Secy., Marine Department.

CALCUTTA, *the 20th June 1902.*

GOVERNMENT OF BENGAL—MARINE DEPARTMENT.

NOTICE TO MARINERS—No. 182.

[Third Publication.]

PACIFIC OCEAN—THE PHILIPPINE ISLANDS—SAMAR, SOUTH COAST.

Manikani island—Amended position of reef.

WITH reference to Notice to Mariners No. 152, dated 31st May 1902, issued by this Office, the British Admiralty has given further notice (No. 301 of 1902) that the position of the reef, with patches of 3 feet and a general depth of 2 fathoms over it, is reported to exist on the south coast of Samar, is situated with Gigoso point bearing N. 16° W., distant $4\frac{1}{10}$ miles and northern extremity of Manikani island S. 85° E.

Approximate position on Chart No. 962, lat. 11° 1′ N., long. 125° 31′ E.

(*Variation 1° Easterly in 1902.*)

This Notice affects the following Admiralty Charts:—Sulu sea, No. 2578; South part of Samar island on Chart No. 962: Also, Eastern Archipelago, part I, 1890, page 348.

E. J. BEAUMONT, COMDR., R.I.M.,
Port Officer of Calcutta.

Published for general information.

C. B. BAYLEY,
Asst. Secy., Marine Department.

CALCUTTA, *the 20th June 1902.*

GOVERNMENT OF BENGAL—MARINE DEPARTMENT.

NOTICE TO MARINERS—No. 183.

Third Publication]

PACIFIC OCEAN—THE PHILIPPINE ISLANDS—SAMAR, WEST COAST.

Kalbayok river—Light established.

THE British Admiralty has given notice (No. 302 of 1902) that a *white fixed* light, visible from a distance of 10 miles from the bearing of S. 68° E., through east and north, to N. 68° W., has been established on the south-east point of the entrance to Kalbayok river.

Approximate position, lat. 12° 4′ N., long. 124° 35½′ E.

(*Variation 1° Easterly in 1902.*)

This Notice affects the following Admiralty Charts:—Sulu sea, No. 2578; South part of Samar island on Chart No. 962: Also, List of Lights, part VI, 1902, page 108; and Eastern Archipelago, part I, 1890, pages 328, 329.

E. J. BEAUMONT, COMDR., R.I.M.,
Port Officer of Calcutta.

Published for general information.

C. B. BAYLEY,
Asst. Secy., Marine Department.

CALCUTTA, *the 20th June 1902.*

REGISTERED No., C 209.]

No. 28 of 1902.

SUPPLEMENT TO

The Calcutta Gazette.

WEDNESDAY, JULY 9, 1902.

OFFICIAL PAPERS.

[Non-Subscribers to the GAZETTE *may receive the* SUPPLEMENT *separately on payment of five rupees per annum if delivered in Calcutta, or seven rupees and eight annas if sent by post.]*

CONTENTS.

	Page
RE-DISTRIBUTION of the scale of toonage alloted to the various grades of the Bengal Pilot Service	977
First Forecast of the Jute Crop in Bengal, 1902	979
Weather and Crop Report for the week ending the 7th July 1902	986
Prices-current (retail and wholesale) of food-grains and salt in the head-quarters station bazars of the districts of Bengal on the 30th June 1902	990
Areas leased for Irrigation up to end of May 1902	996
Abstract statement showing Tollage on Canals in Bengal classed as Major and Minor Works for the month of May 1902	997
CIRCULAR and Eastern Canal for the week ending Saturday the 5th July 1902	998
Abstract of the Results of Meteorological Observations taken at the Alipore Observatory in the month of June 1902	999
Results of the Meteorological Observations taken at the Alipore Observatory from 22th June to 5th July 1902 ...	1000
East Indian Railway during the five weeks ending 29th March 1902	1001
Eastern Bengal State Railway during the month of March 1902	1003
Weekly Return of Traffic Receipts on Indian Railways ...	1005

REDISTRIBUTION OF THE SCALE OF TONNAGE ALLOTTED TO THE VARIOUS GRADES OF THE BENGAL PILOT SERVICE.

No. 105T.—Marine.

Government of Bengal.

MARINE DEPARTMENT.

Dated Darjeeling, the 1st July 1902.

RESOLUTION.

READ—

Resolution No. 2178Marine, dated 18th September 1893.
Letter No. 2234, dated 17th June 1902, from the Port Officer, Calcutta.

IN the Resolution read above the tonnage scale of vessels to be distributed among the various grades of pilots was fixed, the object of this scale being to reserve ships of large tonnage for the more experienced pilots, and also to secure, as far as possible, an average income to each pilot, proportionate to his standing in the service. This scale has now been in force for nearly nine years.

2. In his letter of the 17th June 1902, the Port Officer, Calcutta, brings to the notice of Government that, while the number of vessels of the Branch Pilots' tonnage has increased from 931 in 1894 to 1,771 in 1901, the numbers falling to the three lower grades have decreased. Notwithstanding this falling off in number in the lower grades, the earnings of the Master and Mate Pilots show an increase. This is entirely due to the fact that these junior officers have had to pilot over 25 per cent. of the vessels belonging to the senior class. The vessels in this class are yearly increasing, and the numbers are far in excess of the capabilities of the Branch Pilots. In order to avoid detention to vessels and to ensure a more equable distribution of their number among the members of the Pilot Service, the Lieutenant-Governor considers that the time has arrived to readjust the tonnage of the several grades. Accordingly His Honour has been pleased to decide that the following scale shall be observed until further orders:—

Branch Pilots	...	...	Above		3,000	tons.
Senior Master Pilots	...	...	From over	1,600 to	3,000	„
Junior ditto	...	...	„ „	1,600 to	2,600	„
Mate Pilots	...	...	Up	to	1,600	„

ORDER.—Ordered that a copy of this Resolution be forwarded to the Port Officer, Calcutta, for information and guidance.

Ordered also that a copy of this Resolution be forwarded to the Government of India in the Department of Finance and Commerce for information.

By order of the Lieutenant-Governor of Bengal,

D. B. HORN,

Offg. Secretary to the Govt. of Bengal.

FIRST FORECAST OF THE JUTE CROP IN BENGAL FOR THE SEASON, 1902.

THE following is published for general information.

W. C. MACPHERSON,
Offg. Secy. to the Govt. of Bengal.

The 2nd July 1902.

DEPARTMENT OF LAND RECORDS AND AGRICULTURE, BENGAL.

First forecast of the Jute Crop in Bengal for the Season 1902.

Explanatory.—Returns are received from 26 districts in Bengal, the area under jute in the remaining 21 districts being insignificant. About two-thirds of the crop is grown in Eastern Bengal, principally in Mymensingh, Tippera, Dacca, Pabna, Rajshahi and Bogra, while one-fourth comes from the Rangpur, Dinajpur and Jalpaiguri districts of Northern Bengal. The present forecast contains figures for the area sown, and the probable outturn of the crop, as estimated up to the middle of June.

2. *Character of the season.*—The season has been abnormal and we must go back to 1891 for a record of so heavy a rainfall in April and May. A prolonged drought ended in the middle of March. In April the rainfall was excessive, especially in the Dacca and Chittagong Divisions. In May the fall was almost everywhere in excess, and especially so in the Dacca Division. During these two months the rainfall almost doubled the normal in the Dacca Division and more than did so in Tippera. In South-Eastern Bengal the weather was, therefore, very unfavourable for sowings, and to a less extent this was the case also in North-Eastern Bengal. The heavy rain in May has also retarded weeding.

3. *Area cultivated.*—It is now estimated by District Officers that the normal area under jute is 2,313,200 acres, that 2,262,200 acres were grown last year; and that this season's cultivation extends to 2,107,500 acres. There can be little doubt that the area cultivated in 1901 was underestimated. The imports into Calcutta and Chittagong indicate that the crop approached 76 lakhs of bales. At 3½ bales to the acre, which may be taken as a bumper crop, the area cropped must have been 2,375,000 acres, so that District Officers have underestimated the area by 5 per cent. Assuming the same co-efficient of error in this year's estimate, the area is not likely to fall short of 2,200,000 acres, which is probably 7 per cent. less than in 1901.

The decrease is mainly due to excessive rainfall at the sowing seasons, but is also attributed in some districts to low prices obtained last year.

4. *Character of the crop.*—The prospects of this season's crop are not encouraging. Of the districts which return 50,000 acres and upwards, only two, Dinajpur and the 24-Parganas, estimate a full average crop of 100 per cent. Pabna expects 93 per cent., Rajshahi 85 per cent., and Purnea 82 per cent. Jalpaiguri anticipates a 77 per cent. crop, while the important districts of Mymensingh, Rangpur, and Faridpur with 942,200 acres between them only estimate 75 per cent. Dacca, with 152,000 acres, anticipates only 57·8 per cent., while Tippera, with 235,000 acres, expects only 50 per cent. of a normal crop. The detailed estimates worked out for the Province as a whole give a 75 per cent. crop. It seems to me that the returns from some districts are unduly pessimistic.

This is especially the case in North-Eastern Bengal, where the damage reported seems to be out of all proportion to the excess in rainfall over the normal. Making allowance for the tendency to underestimate, which was so strongly marked last season, I anticipate that an 80 per cent. crop will be reaped, provided that conditions for the remainder of the season are normal. If my estimates of area and outturn are correct, the yield may be expected to reach $52\frac{4}{5}$ lakhs of bales.

5. *Stocks of the previous season's crop in hand.*—District Officers report stocks to be low.

The above estimates of area and outturn are based upon the reports from District Officers, which are published for general information with this forecast.

C. G. H. ALLEN,

Offg. Director of the Dept. of Land Records and Agriculture, Bengal.

DARJEELING,
The 21st June 1902.

APPENDIX I.

First Forecast of the Jute Crop of Bengal, 1902.

Division.	District.	Total area of the district.	Estimated total area under cultivation.	Approximate normal area under jute.	Approximate area sown last year (1901).	Estimated area sown this year (1902).	Taking 100 to represent the normal outturn, how much represented outturn last year (1901)?	Taking 100 to represent the normal outturn, how much will represent this year's outturn (1902)?	Whether much, little, or no jute remains in the district from the crop of the year 1901.	Remarks by District Officers.	Remarks by the Department of Land Records and Agriculture, Bengal.
1	2	3	4	5	6	7	8	9	10	11	12
		Acres.	Acres.	Acres.	Acres.	Acres.					
Burdwan ...	Burdwan	1,726,080	1,324,200	11,000	11,000	11,000	100	180	None.	.....	Column 8 has been revised.
	Midnapore ...	3,292,800	2,190,600	14,000	12,800	12,800	84	91	Sadar none. Contai about 2 annas. Tamluk very little. Ghatal none.	The normal area has been increased in the Ghatal subdivision by about 100 acres. Some of the cultivators having cultivated jute this year on lands where *aus* paddy was destroyed last year for want of timely rain.	.....
	Hooghly	1,047,360	702,[illegible]	12,000	13,600	13,300	88	94	Very little.	A slightly decreased outturn is likely, owing to the continual rain in the Serampore and Sadar subdivisions but in most parts a good crop is expected.	.....
Presidency	24-Parganas ...	1,[illegible]	1,102,000	63,000	53,700	59,300	115	100	Little jute remains from the crop of the last year.	The increase in columns 5 and 7 is due to the fact that the jute is more paying and the season more favourable this year.	The entry in column 6 has been revised.
	Nadia	1,788,160	1,[illegible]	30,000	36,000	31,500	78	61	Little	As per revised final report for 1901. The decrease in area and in the estimated outturn is due to untimely and excessive rain.	The figure in column 6 has been revised.

Division.	District.	Total area of the district.	Estimated total area under cultivation.	Approximate normal area under jute.	Approximate area sown last year (1901).	Estimated area sown this year (1902).	Taking 100 to represent the normal outturn, how much represented outturn last year (1901)?	Taking 100 to represent the normal outturn, how much will represent this year's outturn (1902)?	Whether much, little, or no jute remains in the district from the crop of the year 1901.	Remarks by District Officers.	Remarks by the Department of Land Records and Agriculture, Bengal.
1	2	3	4	5	6	7	8	9	10	11	12
		Acres.	Acres.	Acres.	Acres.	Acres.					
Presidency—*concld.*	Murshidabad ...	1,173,440	965,800	21,700	24,000	16,600	93	95	Little	.....	The figure in column 7 is probably under-estimated.
	Jessore	1,872,000	1,142,000	33,200	33,600	30,300	81	65	Little	The final outturn is dependent on the weather in July and August.	The figure in column 6 has been revised.
	Khulna	3,103,942	870,000	20,800	12,000	11,600	93	85	Little	The decrease in the area sown this year is due to excessive early rains.	
	Rajshahi	1,663,040	1,282,00	108,100	112,200	100,000	95	85	A certain amount in the Natore subdivision. In Naogaon practically none.	Reduction of area is due to low price of jute last year, and low percentage of outturn due to rain in excess.	
	Dinajpur ...	2,326,080	1,97,000	102,000	70,000	80,000	80	100	Very little	Sufficient and seasonable rainfall has induced the sowing of a larger area with jute. The crop is thriving well, and promises an average outturn.	

Rajshahi ...	Jalpaiguri ...	1,894,600	1,075,000	66,700	69,800	58,700	77	77	Little jute remains in the district for home consumption.	Early and frequent rains have prevented successful weeding.	
	Darjeeling (plains)	744,960	148,000	2,500	2,000	2,500	75	80	Little	The increase in the outturn is expected, owing to early rains.	The figure in column 9 is probably an under-estimate.
	Rangpur ...	2,231,040	1,60,700	340,000	370,800	332,200	90	75	A little jute remains from last year's crop.	The decrease in area shown this year is due to the low price of jute during the last year. Excessive rainfall during April and May retarded the growth of the jute crop.	
	Bogra	869,760	680,000	95,000	71,000	70,000	90	70	Very little	Frequent rains proved detrimental to the growth of the plants and suppressed the growth, interfering with the weeding. Hence the fall in area and outturn.	
	Pabna ...	1,176,960	882,500	144,800	140,500	153,000	100	93	Little	Jute is more extensively grown in the Serajganj subdivison than in the Sadar. It is reported by the Subdivisional Officer of Serajganj, that the cultivators having in stock the required quantity of food-grains have increased the area under jute to liquidate debts. Owing to excessive rainfall the weeding operations have been retarded, and the crop on the low lands has been much damaged. Hence the outturn is expected to be below the average. The stock of jute may be attributed to the low price ruling during the greater part of the trading season.	
Dacca ...	Dacca	1,789,480	1,215,500	171,000	165,000	152,000	102	58	Very little	The decrease in the area sown and the outturn is due to the untimely and excessive rainfall, since the sowing season.	
	Mymensingh ...	4,062,480	2,405,700	562,100	545,500	500,000	106	75	Little	Small outturn anticipated, owing to excessive rain. The normal area shown in column 5 ought perhaps to be raised, but my figures are so inadequate that I am not prepared to alter the figures without further enquiry. All subdivisions except Tangail report a reduced area owing to excessive rain.	
	Faridpur	1,459,840	1,116,900	100,000	105,000	110,000	100	75	About $\frac{1}{4}$ of the last year's entire produce is estimated to be in stock.	The increase in area is due to early rain this year, but the outturn will be poor owing to excessive rain during the growth season.	
	Backergunge ...	2,335,360	1,468,000	10,000	10,000	10,000	100	50	Little	The outturn is expected to be much below the normal this year, owing to excessive rainfall at the sowing season.	

Division.	District.	Total area of the district.	Estimated total area under cultivation.	Approximate normal area under jute.	Approximate area sown last year (1901).	Estimated area sown this year (1902).	Taking 100 to represent the normal outturn, how much represented outturn last year (1901)?	Taking 100 to represent the normal outturn, how much will represent this year's outturn (1902)?	Whether much, little, or no jute remains in the district from the crop of the year 1901.	Remarks by District Officers.	Remarks by the Department of Land Records and Agriculture, Bengal.
1	2	3	4	5	6	7	8	9	10	11	12
		Acres.	Acres.	Acres.	Acres.	Acres.					
Chittagong ...	Tippera	1,594,880	1,198,400	285,000	293,000	253,000	88	50	Little	Cultivation was retarded by drought, and the crop was subsequently injured by the abnormal rainfall of April.	
	Noakhali	1,062,840	813,800	3,500	7,000	2,100	55	30	Very little jute remains in the district.	The decreases both in the area sown and in the estimated outturn are due to excessive rainfall at the time of sowing. In 1900 the area sown with jute was estimated at 1,900 acres. In 1901 a special enquiry was made about the area under jute in this district. It came out from the enquiry that some lands formerly sown with paddy were sown with jute, and the estimated area thus sown was 7,000 acres. But the enquiry made this year shows a falling off. It is entirely due to the excessive rainfall as explained above.	
	Bhagalpur ...	2,704,640	2,097,600	21,900	22,300	22,300	100	100	No jute remains in the district from the crop of the year 1901.	.....	

Bhagalpur ..	Purnea	3,195,520	1,639,800	55,000	53,000	53,000	90	82	A little	The weather was unfavourable for this crop in the Kishanganj where it is extensively cultivated and in some parts of Sadar subdivisions; hence a decrease in the outturn. No extension of cultivation can be expected in face of the bad prices realised last year.
	Malda	1,216,000	672,800	32,500	30,900	29,200	87	93	Very little jute remains from the crop of 1901.	The cause of decrease in the area sown this year is due to low price of jute last year. On account of timely rainfall the outturn of this year is expected to be more than that of the previous year. Enquiry is being made as to the approximate normal area under jute, but it is not possible to come to any conclusion unless further enquiry is made for a year or two more, when the question of increasing or decreasing the normal area can be considered.
Orissa ...	Cuttack	2,323,200	1,161,200	4,800	5,600	5,900	90	100	Small quantity	Owing to favourable rainfall the area sown has increased by about 300 acres, and at least the average outturn is expected.
	Balasore	1,334,368	870,800	2,600	3,000	4,700	95	100	Little	The increase in area and outturn is due to seasonable rains.
Bengal	.....	49,744,420	31,500,400	2,313,200	2,262,200	2,107,500	96*	80*	.....	.....

* Estimated by this Department.

WEATHER AND CROP REPORT.

For the week ending the 7th July 1902.

Burdwan.—Rainfall at Sadar 3·34, Kalna 0·25, Katwa 0·65, Raniganj 2·64. Weather cool and cloudy with showers. Ploughing and sowing continue. Fodder and water sufficient. Condition of cattle good. Common rice sells at 12 seers per rupee.

Birbhum.—Rainfall at Sadar 4·27, Rampur Hât 4·92. The rain has done considerable good. Transplanting paddy going on. Sugarcane promising. Common rice sells at Sadar at 12 seers per rupee. Fodder sufficient.

Bankura.—Rainfall at Sadar ·99, Vishnupur 1·80. Weather cloudy. More rain is wanted for transplantation of paddy. Sugarcane is growing well. Fodder and water sufficient. Common rice sells at 13 seers per rupee.

Midnapore.—Rainfall at Sadar 1·73, Contai 5·14, Tamluk 5·40, Ghatal 4·00. More rain wanted for paddy in thanas Binpur and Garhbeta. Weather seasonable. Fodder and water sufficient. Cattle-disease reported from thana Debra. Common rice sells as follows:—

		Srs.	ch.	
Sadar	... ...	12	8	per rupee.
Contai	... ...	12	0	
Tamluk	... ...	11	12	
Ghatal	... ...	12	4	

Hooghly.—Rainfall at Sadar 1·17, Serampore 2·32, Arambagh 1·87. Weeding of *aus*, sugarcane and jute progressing. Rain wanted. Fodder and water sufficient. Price of common rice stationary.

Howrah.—Rainfall at Sadar 3·97, Ulubaria 3·61. Fall general. It has done much good to the paddy seedlings and other crops. Weather comparatively cooler than in the previous weeks. Fodder and water sufficient. No cattle-disease. Common rice sells at Sadar at 10½ and at Ulubaria at 11 seers per rupee.

24-Parganas.—Rainfall at Sadar 5·18, Barasat 1·43, Basirhat 3·75, Diamond Harbour 6·80. Strong monsoon weather. State and prospect of standing crops good, but more rain is wanted at Barasat. Transplantation of *aman* is going on and the weeding of *aus* is almost over. Common rice sells at 12 seers per rupee. Condition of cattle good. Supply of fodder and water sufficient.

Nadia.—Rainfall at Sadar 2·23, Ranaghat 0·67, Chuadanga 3·05, Meherpur ·66, Kushtia 5·32. Weather showery. More rain required. No cattle-disease reported. Fodder and drinking water sufficient. Common rice sells as follows:—

		Srs.	ch.	
Sadar	... ...	11	0	per rupee.
Ranaghat	... ...	11	0	
Chuadanga	... ...	11	4	
Meherpur	... ...	10	11	
Kushtia	... ...	11	4	

Murshidabad.—Rainfall at Sadar 3·49, Kandi 1·21, Jangipur 0·78, Lalbagh 0·22. Weather seasonable. *Bhadoi* in Jangipur being harvested. *Haimanti* seedlings doing well. Prospect of sugarcane and jute good. More rain wanted for *aus* paddy. No cattle-disease. Fodder and water sufficient. Common rice sells as follows:—

		Srs.	ch.	
Sadar	... ...	10	12	per rupee.
Kandi	... ...	12	0	
Jangipur	... ...	12	0	
Lalbagh	... ...	11	0	

Jessore.—Rainfall at Sadar 4·14, Jhenida 4·21, Magura 2·34, Narail 6·91, Bangaon 2·47. Weather seasonable. Prospects of crops fair to good. Fodder and water sufficient. Cattle-disease reported from Sadar and Narail. Common rice sells at 12 seers per rupee.

Khulna.—Rainfall at Sadar 4·53, Bagerhat 7·53, Satkhira 3·73. Weather hot and cloudy. Cultivation and sowing of *aman* going on. State of crops continues favourable. Fodder and water sufficient. Cattle-disease reported from thana Mollahat. Common rice sells as follows:—

		Srs.	ch.	
Sadar	... ...	11	12	per rupee.
Bagerhat	... ...	12	0	
Satkhira	... ...	10	8	

Rajshahi.—Rainfall at Sadar 3·67, Nator 6·21, Naugaon 4·51. Transplantation of winter paddy in progress. Prospects of standing crops good. Sporadic cases of cattle-disease reported from Nator and Naugaon. Common rice sells at 11 seers per rupee.

Dinajpur.— Rainfall at Sadar 7·36. Fall in the district general, varying from 9·23 to 2·20. Weather seasonable. Standing crops good. Transplantation of winter rice progressing. No cattle-disease. Fodder and drinking-water plentiful. Rice selling at 12 seers per rupee.

Jalpaiguri.— Rainfall at Sadar 9·64. Weather rainy and cloudy. Condition of *bhadoi* paddy and jute not good owing to excessive rain. Transplantation of *haimanti* paddy commenced. Fodder and water sufficient. Common rice sells at 11 seers per rupee.

Darjeeling.—Rainfall at Sadar 6 00, Kurseong 6·25, Siliguri 3·09. Weather seasonable. *Hills*—Potato being harvested. *Haimanti dhan* being cultivated. Maize, *chota marua* and *bhadoi dhan* doing well. *Terai*—Land being ploughed for *haimanti* paddy. Sowing for seedlings nearly finished. Coarse rice sells as follows:—

	Srs. ch.	
Hill	8 0	per rupee.
Terai	12 0	

Maize sells at 16 seers per rupee.

Rangpur.—Rainfall at Sadar 4·76. Fall general. Weather seasonable. Transplantation of *aman* and cutting of jute going on. Prospects of jute and *aus* not favourable at Gaibanda. Fodder and water sufficient. Common rice sells at Sadar at 11 seers per rupee.

Bogra.—Rainfall at Sadar 7·59. Fall general. Weather hot and cloudy. Lands are being prepared for winter rice. Transplantation commenced in places. Prospects good. Fodder and water sufficient. Common rice sells at 11 seers 4 chitaks per rupee.

Pabna.—Rainfall at Sadar 1·76, Sirajganj 4·22. Fall general. Weather rainy and hot. Weeding of paddy and jute continues. *Til* and *kaon* are being harvested. Outturn poor owing to excessive rainfall. Prospects of standing crops fair. Rains damaged jute in places. Fodder and water sufficient. No cattle-disease. Common rice sells at 10 seers per rupee.

Dacca.— Rainfall at Sadar 5·55, Manikganj 4·01, Munshiganj 8·93, Narayanganj 6·99. Whether seasonable. Prospects of crops fair. Fodder available. No cattle-disease. Common rice sells at 11 seers per rupee.

Mymensingh.—Rainfall at Sadar 4·74. Fall general. Weather seasonable. Transplantation of winter rice commenced. *Aus* and jute have suffered owing to heavy rain. Fodder and water sufficient. No cattle-disease. Common rice sells as follows:—

	Srs. ch.	
Sadar	10 0	per rupee.
Kishorganj	11 12	
Jamalpur	11 0	
Netrokona	11 3	
Tangail	10 0	

Faridpur.—Rainfall at Sadar 3 28, Goalundo 5·29, Madaripur 2·68. Weather cloudy and hot. Prospects of crops still uncertain. Fodder sufficient. No cattle-disease. Common rice sells at 11¼ seers per rupee.

Backergunge.— Rainfall at Sadar 8·93, Pirojpur 5·29, Patuakhali 7 01, Bhola 4·88. Weather cloudy. Transplanting of *aman* progressing. Prospects dull. Fodder sufficient. Cattle-disease reported from Mathari thana. Common rice sells at 10 seers per rupee.

Tippera.—Rainfall at Sadar 1·80, Brahmanbaria 6·80, Chandpur 5·87. Weather seasonable. Prospects of standing crops good at Brahmanbaria, but not so at Sadar. Sowing of *aman* going on. Fodder and water sufficient. Average price of common rice 11 seers 5 chitaks per rupee.

Noakhali.—Rainfall at Sadar 8·52, Feni 7·77. Fall general. Weather seasonable. Transplantation of *aman* not commenced. Prospects fair. Fodder and water sufficient. Cattle-disease in three thanas. Common rice sells at Sadar at 10 seers and at Feni at 12 seers per rupee.

Chittagong.— Rainfall at Sadar 6·09, Cox's Bazar 14·01. Ploughing for *aman* crops going on. *Aus dhan* is being transplanted. Cattle-disease prevalent in parts of the district. Fodder and water sufficient. Common rice sells at 12¾ seers per rupee.

Chittagong Hill Tracts.—Rainfall at Sadar 7·47. Fall general. Weather very wet but improving. *Joom* crops good. Land being prepared for winter rice crop. No cattle-disease. Common rice selling at 11 seers per rupee.

Patna.—Rainfall at Sadar 1·28, Barh 5·38, Bihar 0·54, Dinapur 0·36, Hilsa 0·40, Bikram 0·35. Weather cloudy and hot. Preparation of land for sowing continues. Prolonged drought has done considerable damage to *bhadoi* crops and sugarcane. No cattle-disease. Fodder and water scarce in Bihar subdivision. Common rice sells as follows :—

	Srs.	ch.	
Patna	11	0	per rupee.
Barh	11	8	
Bihar	10	0	
Dinapore	11	0	

Gaya.—Rainfall at Sadar 0·80, Aurangabad 2·61, Nawadah 2·55. Weather hot and cloudy. Transplanting of *marua* commenced. Lands being prepared for sowing *bhadoi* and paddy. Rain badly wanted in some parts. No cattle-disease. Fodder and water for cattle sufficient. Average price of common rice is 10 seers 14 chitaks per rupee.

Shahabad.—Rainfall at Sadar 3·04, Buxar 2·58, Bhabhua 2·02, Sasaram 3·06, Dehri 5·13. Weather hot and cloudy with east wind. The rain has been useful for sowing of *bhadoi* and paddy. More rain wanted. Sugarcane good. Fodder and water sufficient. Rice sells at 11 seers per rupee at Sadar.

Saran.—Rainfall at Sadar 1·17, Siwan 2·62, Gopalganj 5·18. Weather cloudy and rainy. Rain has done much good to the standing crops. Sowing of *bhadoi* continues. No cattle-disease. Water and fodder sufficient. Common rice sells at 11 seers per rupee.

Champaran.—Rainfall at Sadar 3·21, Bettiah 5·25. Fall general. Weather hot and cloudy. Prospects of standing crops greatly improved by the rain. Rice being sown and transplanted. Cattle-disease reported. Fodder and water sufficient. Common rice sells at 12½ seers and maize 23½ seers per rupee.

Muzaffarpur.—Rainfall at Sadar ·80, Hajipur ·56, Sitamarhi 2·60. Weather cloudy and rain occasionally. Rainfall general. Sowing of paddy and *bhadoi* crops going on. More rain wanted. Fodder and water sufficient. A few cases of cattle-disease still in Sitamarhi subdivision. Prices are—Common rice 11½ seers and maize 19 seers a rupee.

Darbhanga.—Rainfall at Sadar 1·28, Samastipur 2·02, Madhubani 1·19. More rain is required for transplantation of paddy seedlings. Fodder and water sufficient. Cattle-disease is reported from village Deodha. Common rice sells as follows :—

	Srs.	ch.	
Sadar	11	4	per rupee.
Samastipur	12	0	
Madhubani	11	11	

Monghyr.—Rainfall at Sadar 1·57, Begusarai 0·84, Jamui 1·14. Weather very hot and cloudy ; subsequently rainy. *Bhadoi* and paddy sowing going on. Recent rain has benefited the crops. More rain still needed for *bhadoi* and to prevent water scarcity in Begusarai subdivision. Sugarcane promising. Cattle-disease reported from Begusarai thana. Fodder sufficient. Water plenty in Sadar and Jamui subdivisions. Common rice sells at Sadar at 11 seers 3 chitaks and at subdivisions at 11 seers per rupee.

Bhagalpur.—Rainfall at Sadar 1·75, Banka 1·40, Madhipura 0·15, Supaul 0·10. Weather cloudy. Transplantation of *bhadoi* and *aghani* paddy going on. Prospects fair. Recent rainfall did immense good to the standing crops. More rain wanted. Fodder and water sufficient. Cattle-disease reported from Banka and Supaul. Common rice sells as follows ;—

	Srs.	ch.	
Sadar	12	0	per rupee.
Banka	11	4	
Madhipura	13	0	
Supaul	15	8	

Purnea.—Rainfall at Sadar 1·74, Kishanganj 5·50, Araria 2·75. Fall general, but scanty in the Sadar, where want of rain has almost stopped agricultural works. Weather variable. Transplantation of winter rice going on in subdivisions. A few cases of cattle-disease reported from Araria. Fodder and water sufficient. Common rice sells at Sadar and Kishanganj at 11 seers and at Araria at 11½ seers per rupee.

Malda.—Rainfall at Sadar 1·33, Chanchal 2·60. Weather hot with occasional rains. Recent rain has improved the prospects of *bhadoi*. More rain wanted for transplanting of winter rice. No cattle-disease. Fodder and water available. Common rice sells at 11 seers per rupee.

Sonthal Parganas.—Rainfall at Sadar 3·98, Deoghur 3·52, Godda 4·23, Jamtara 0·32, Pakaur 1·31, Rajmahal 3·46. Fall general. Weather hot and showery. The rain has done immense good to paddy seedlings and Indian-corn. Sugarcane thriving; normal area under *makai*. Grazing improved. Price of common rice at Sadar 12 seers per rupee.

Cuttack.—Rainfall at Sadar 2·63. Fall general, in most parts exceeding the fall at Sadar. Weather monsoonish. *Beali* and *sarad* growing well. *Beali* being weeded at places, Prospects fair. No cattle-disease. Fodder and water sufficient. Common rice sells at 13 seers 2 chitaks at Sadar.

Balasore.—Rainfall at Sadar 5·50. Fall general. Paddy plants with sugarcane doing well. Rice sells at 13 and 15 seers per rupee at Sadar and Bhadrak respectively. *Rabi* in flowers and pods. No cattle-disease reported. Fodder and water ample.

Angul.—Rainfall at Sadar 1·03, Bissipara ·37. Weather rainy and windy. Fall general. Prospect of crop improved by the rain. Sowing of *bhadoi* and *sarad* crops nearly completed. Seeds germinating well. Fodder and water obtainable. Cattle-disease not reported this week. Common rice sells at 12 and 15 seers respectively at Sadar and interior.

Puri.—Rainfall at Sadar 3·60 Weather cloudy Rainfall general throughout the district and favourable to the growth of winter rice and *bhadoi* paddy. Sugarcane doing well. Fodder and water supply sufficient. Common rice sells at 13 seers 12 chitaks per rupee.

Hazaribagh.—Rainfall at Sadar 1·46, Giridih 3·04. Weather cloudy. Rain wanted. Ploughing and sowing in progress. Fodder sufficient. Water scarce. Common rice sells at 11½ seers per rupee.

Ranchi.—Rainfall 4·53. Fall general. Weather cloudy. Prospects improved by recent rains. Cattle-disease reported from Ranchi, Silli and Tamar thanas. Fodder and water available. Common rice selling at 12½ seers per rupee.

Palamau.—Rainfall 2·78. Weather cloudy. A good rain all over the district much improved the condition of crops and fodder. *Bhadoi* sowings in full swing. Cattle-disease in two thanas. Prices at Sadar—Rice 10 seers 2 chitaks and *makai* 14 seers per rupee.

Manbhum.—Rainfall at Sadar 4·70, Gobindpur 2 24. Fall general except in thanas Katras and Nirsha. Weather seasonable. Prospects of crops materially improved by recent rain. Fodder and water sufficient. Cattle-disease reported from Katras. Price of common rice at Sadar 12 and at Gobindpur 11 seers per rupee. Supply sufficient.

Singhbhum.—Rainfall at Sadar 3·30. Weather seasonable. Transplantation of paddy and rearing of *tasar* commenced. Average price of rice 13 seers in the district; at Chaibassa 12 seers per rupee.

General Summary.—Rainfall during the week was general and for the most part heavy. Excessive rain has been unfavourable to the prospects of crops at places in North and East Bengal. Recent rain has improved the prospects in Bihar, but more rain is still wanted at several places there, and also in the Burdwan and Presidency Divisions. Transplantation of winter rice in progress. Sugarcane, early rice and jute generally doing well. Cattle-disease reported from 16 districts. Fodder and water generally sufficient. The price of common rice has risen in 11 districts, fallen in 10, and is stationary in the rest.

By order of the Lieutenant-Governor of Bengal,

W. C. MACPHERSON,

Offg. Secretary to the Govt. of Bengal.

REVENUE DEPARTMENT,

The 8th July 1902.

PRICES-CURRENT (retail) of Food-grains and Salt in the Head-

Number.	DISTRICTS.	QUANTITIES PER RUPEE IN											
		WHEAT.			BARLEY.			RICE, COMMON.			JOWAR OR CHOLUM (*Sorghum Vulgare*).		
		Present return.	Next preceding return.	Corresponding return of last year.	Present return.	Next preceding return.	Corresponding return of last year.	Present return.	Next preceding return.	Corresponding return of last year.	Present return.	Next preceding return.	Corresponding return of last year.
	BENGAL.	S. Ch.	S. Ch.	S. Ch.	S. Ch.	S. Ch.	S. Ch.	S. Ch.	S. Ch.	S. Ch.	S. Ch.	S. Ch.	S. Ch.
BURDWAN DIVISION.													
1	Burdwan ...	13 0	13 8	12 8	...	...	...	11 12	11 12	12 0	...	...	...
2	Birbhum ...	12 12	13 0	12 0	...	...	...	12 0	12 0	11 4	...	...	...
3	Bankura ...	12 0	12 0	10 8	...	...	...	13 12	14 8	11 4	...	...	...
4	Midnapore ...	12 0	12 0	10 0	...	...	...	12 8	12 8	11 4	...	...	...
5	Hooghly ...	10 0	10 0	10 0	...	...	...	10 0	10 0	9 8	...	...	...
6	Howrah ...	...	...	...	..	...	...	10 8	10 8	10 8	...	...	...
PRESIDENCY DIVISION.													
7	24-Parganas ...	...	...	...	...	...	...	10 0	10 4	9 12	...	...	...
8	Calcutta ...	10 0	10 0	10 10	14 4	14 8	14 8	10 0	10 0	9 10	13 5	13 14	16 0
9	Nadia ...	14 9	13 14	14 0	20 0	20 0	17 12	11 6	11 6	11 0	...	...	...
10	Murshidabad ...	15 0	15 0	13 0	20 0	21 0	20 0	11 8	11 0	12 0	...	...	...
11	Jessore ...	10 0	10 0	10 0	10 0	10 0	10 0	12 12	12 12	11 8	...	...	...
12	Khulna ...	...	...	...	...	...	...	11 10	12 0	10 8	...	...	...
RAJSHAHI DIVISION.													
13	Rajshahi ...	16 8	15 12	14 4	21 0	26 4	21 0	10 11	10 8	10 14	...	...	...
14	Dinajpur ...	13 0	12 10	13 0	...	...	19 0	11 8	12 0	10 12	...	...	...
15	Jalpaiguri ...	11 0	11 0	10 0	...	...	...	10 12	11 8	11 0	...	...	...
16	Darjeeling ...	...	...	...	...	...	...	10 0	10 0	9 0	...	...	...
17	Rangpur ...	10 8	10 8	9 0	...	...	...	11 0	11 0	10 0	...	...	...
18	Bogra ...	10 8	10 8	10 8	...	...	...	11 4	11 4	10 8	...	...	...
19	Pabna ...	15 12	15 12	13 8	26 4	26 4	22 8	10 8	10 8	10 8	...	...	...
DACCA DIVISION.													
20	Dacca ...	12 8	12 8	12 0	18 0	18 0	16 0	11 0	11 0	9 4	...	...	...
21	Mymensingh ...	12 0	12 0	9 8	13 0	13 0	11 0	11 0	11 0	10 0	...	...	...
22	Faridpur ...	16 0	16 0	11 7	22 0	20 0	14 0	9 8	10 12	10 8	...	...	...
23	Backergunge ...	...	...	...	...	...	...	10 8	11 0	9 0	...	...	...

A. In the subdivisions the retail prices of salt per rupee are—Kalna 11 seers 13 chitaks ; Katwa 11 seers 12 chitaks ; Raniganj 10½ seers.
B. At Rampur Hát the retail price of salt is 11¼ seers per rupee.
C. At Vishnupur the retail price of salt is 9½ seers per rupee.
D. In the subdivisions the retail prices of salt per rupee are—Contai 10 seers ; Tamluk 11 seers ; Ghatal 11 seers 7 chituks.
E. In the subdivisions the retail prices of salt per rupee are—Serampore 10½ seers ; Arambagh 10 seers 10 chitaks.
F. At Ulubaria the retail price of salt is 10 seers 10½ chitaks per rupee.
G. In the marts in the interior of the district the retail prices of salt per rupee are—Chetla 10 seers 10 chitaks ; Barasat 11 seers ; Baduria 11 seers ; Moraghat 10 seers 10½ chitaks.
H. In the subdivisions the retail prices of salt per rupee are—Kushtia 10½ seers ; Chuadanga 11 seers (panga) ; Meherpur 10 seers 10 chitaks (karkatob) ; Ranaghat 11 seers 4 chitaks (crushed).
I. In the subdivisions the retail prices of salt per rupee are—Lalbagh 10 seers ; Kandi return not received ; Jangipur return not received.

quarters Station Bazars of the Districts of Bengal on the 30th June 1902.

SALT.			WHOLESALE PRICES PER MAUND OF 40 SEERS.			AVERAGE WAGES PER MONTH.									DISTRICTS.	Number.	
			SALT.			UNSKILLED LABOUR—ABLE-BODIED AGRICULTURAL LABOURER.			SYCE OR HORSE-KEEPER.			SKILLED LABOUR—COMMON MASON, CARPENTER OR BLACKSMITH.					
Present return.	Next preceding return.	Corresponding return of last year.	Present return.	Next preceding return.	Corresponding return of last year.	Present return.	Next preceding return.	Corresponding return of last year.	Present return.	Next preceding return.	Corresponding return of last year.	Present return.	Next preceding return.	Corresponding return of last year.			
S. Ch.	S. Ch.	S. Ch.	Rs. A. P.	Rs. A. P.	Rs. A. P.	Rs. A.	Rs. A.	Rs. A.	Rs. A.	Rs. A.	Rs. A.	Rs. A.	Rs. A.	Rs. A.	BENGAL.		
A 11 8	11 4	10 8	3 3 0	3 4 0	3 3 0	9 8	7 8	7 8 to 10 0	6 0	7 0	6 0 to 8 0	15 0	15 0	15 0	Burdwan.	1	Burdwan Division.
B 10 8	10 8	10 8	3 12 0	3 12 0	3 10 6	6 0 to 7 8	6 0 to 7 8	6 0 to 7 8	4 0 to 6 0	4 0 to 6 0	4 0 to 6 0	12 0 to 15 0	7 8 to 15 0	7 8 to 12 0	Birbhum.	2	
C 11 0	11 0	10 8	3 12 0	3 10 0	3 12 0	6 0 to 7 8	6 0 to 7 8	6 0 to 7 8	5 0 to 7 8	5 0 to 7 8	5 0 to 7 8	8 0 to 12 0	8 0 to 12 0	8 0 to 12 0	Bankura.	3	
D 10 8	10 8	10 4	3 7 0	3 7 0	3 11 0	8 8	8 8	8 8	7 8	7 8	7 8	12 0 to 18 0	12 0 to 18 0	12 0 to 18 0	Midnapore.	4	
E 10 8	10 8	10 0	3 12 0	3 12 0	3 12 0	10 0	10 0	10 0	8 0	7 0	8 0	12 0 to 15 0	10 0 to 20 0	15 0 to 30 0	Hooghly.	5	
F 10 8	10 8	10 8	3 12 0	3 12 0	3 10 0	10 8	10 8	10 0 to 12 0	8 0	8 0	10 0 to 12 0	15 0	15 0	20 0 to 30 0	Howrah.	6	
G 10 10	10 10	9 2	Panga. 3 7 0	3 5 6	3 10	8 0 to 10 0	10 0	8 0 to 10 0	7 0 to 8 0	8 0	7 0 to 8 0	12 0 to 20 0	15 0 to 25 0	12 0 to 20 0	24-Parganas.	7	Presidency Division.
11 0	11 0	10 10	Panga. 3 6 0	3 6 0	3 9 0	9 0	8 8	9 0	9 0	8 0	8 0	18 0 to 20 0	18 0 to 20 0	18 0 to 22 0	Calcutta.	8	
H 12 4	12 1	11 6	3 4 0	3 5 6	3 8 6	9 6	7 8	7 8	7 0	6 0	7 0	12 0 to 15 0	10 0 to 15 0	10 0 to 20 0	Nadia.	9	
I 11 0	11 0	10 8	3 7 0	3 7 0	3 7 0	6 0	5 8	5 0	5 0 to 6 0	5 0 to 6 0	5 0 to 6 0	14 0 to 16 0	14 0 to 16 0	14 0 to 15 0	Murshidabad.	10	
J 10 0	10 0	9 2	Panga. 3 14 0	3 14 0	4 0 0	9 6	10 0	9 6	7 0	7 8	7 0	10 0 to 15 0	15 0 to 19 0	15 0 to 18 0	Jessore.	11	
K 10 0	10 0	10 0	3 12 0	3 12 0	3 12 0	9 6 to 11 0	9 6 to 11 0	9 6 to 11 0	7 0 to 9 0	7 0 to 10 0	7 0 to 10 0	10 0 to 28 0	10 0 to 28 0	10 0 to 28 0	Khulna.	12	
L 10 5	9 9½	9 12	3 13 4	3 13 4	4 0 0	7 8	7 8	7 8	6 8	6 0	6 0	7 0 to 15 0	7 0 to 15 0	7 0 to 15 0	Rajshahi.	13	
M 10 8	10 8	10 0	Panga. 3 12 0	4 0 0	7 0	7 0	7 0	6 0	6 0	6 0	12 0 to 22 0	12 0 to 22 0	12 0 to 22 0	Dinajpur.	14	Rajshahi Division.	
N 10 0	10 0	9 8	3 10 6	3 11 0	3 14 9	7 8	7 8	7 8	8 0	8 0	8 8	15 0 to 20 0	15 0 to 20 0	15 0 to 20 0	Jalpaiguri.	15	
O 8 8	8 8	8 0	Rora. 4 9 0	4 9 0	4 11 0	7 0 to 10 0	7 0 to 10 0	7 0 to 10 0	8 0 to 10 0	8 0 to 10 0	8 0 to 11 0	12 0 to 20 0	12 0 to 25 0	12 0 to 25 0	Darjeeling.	16	
8 0	8 8	8 0	Panga. 4 10 0	4 10 0	4 11 0												
P 10 8	10 8	9 0	Panga. 3 12 0	4 0 0	9 0	7 8	9 0	7 0	7 8	7 0	15 0	15 0	15 0	Rangpur.	17		
10 2	10 2	9 12	Panga. 3 12 0	3 12 0	4 0 0	7 8	7 8	7 8	5 0 to 8 0	5 0 to 8 0	5 0 to 8 0	10 0 to 20 0	10 0 to 20 0	10 0 to 20 0	Bogra.	18	
Q 10 8	10 8	9 12	Panga. 3 12 0	3 12 0	3 14 0	...	5 0 to 7 8	5 0 to 8 0	...	6 0 to 8 0	6 0 to 8 0	...	7 0 to 20 0	7 8 to 20 0	Pabna.	19	
R 10 8	11 0	10 0	Panga. 3 9 0	3 8 0	3 14 0	5 0 to 7 0	6 0 to 7 8	5 0 to 7 0	6 0 to 9 0	6 0 to 9 0	6 0 to 9 0	9 0 to 18 0	9 0 to 18 0	9 0 to 18 0	Dacca.	20	Dacca Division.
S 10 0	10 0	9 8	Panga. 4 0 0	4 0 0	4 0 0	7 0	7 0	8 0	8 0	8 0	8 0	11 0 to 15 0	12 0 to 14 0	12 0 to 14 0	Mymensingh.	21	
T 10 10	10 10	10 0	3 12 0	3 12 0	4 0 0	10 0	11 4 to 13 2	7 8 to 13 2	8 0	8 0 to 10 0	8 0 to 10 0	15 0	15 0 to 20 0	15 0 to 20 0	Faridpur.	22	
U 10 0	10 0	10 0	3 10 0	3 10 0	3 10 0	10 0 to 12 0	8 0	8 0 to 15 0	8 0 to 12 0	8 0	7 8 to 8 0	15 0 to 20 0	12 0 to 15 0	12 0 to 20 0	Backergunge.	23	

J. In the subdivisions the retail prices of salt per rupee are—Jhenida 10 seers; Magura 9¾ seers; Narail 10 seers; Bangaon 10 seers 10 chitaks.
K. In the subdivisions the retail prices of salt per rupee are—Bagerhat 10 seers; Satkhira 11 seers.
L. In the subdivisions the retail prices of salt per rupee are—Nator 10 seers 8 chitaks; Naugaon 9¾ seers.
M. No report from subdivision.
N. At Alipur Duars the retail price of salt is 8 seers per rupee.
O. The retail price of salt (panga) at Kurseong is 8 seers per rupee; Siliguri return not received.
P. In the subdivisions the retail prices of salt per rupee are—Gaibanda 10 seers; Kurigram 8 seers; Nilphamari 10 seers.
Q. At Sirajganj the retail price of salt is 11 seers 10 chitaks per rupee.
R. In the marts in the interior of the district the retail prices of salt per rupee are—Madanganj 11 seers 6 chitaks; Manikganj 9 seers; Mirkadim 11 seers 6 chitaks.
S. In the subdivisions the retail prices of salt per rupee are—Kishorganj 10 seers; Jamalpur 10 seers; Tangail 9 seers, Netrokona 10 seers.
T. In the subdivisions the retail prices of salt per rupee are—Goalundo 10 seers; Madaripur 10¼ seers (crushed).
U. In the subdivisions the retail prices of salt per rupee are—Pirojpur 10 seers; Patuakhali 9 seers; Bhola 9¼ seers.

PRICES-CURRENT (retail) of Food-grains and Salt in the Head-quarters

Number.	Districts.	Quantities per rupee in: Wheat. Present return.	Wheat. Next preceding return.	Wheat. Corresponding return of last year.	Barley. Present return.	Barley. Next preceding return.	Barley. Corresponding return of last year.	Rice, common. Present return.	Rice, common. Next preceding return.	Rice, common. Corresponding return of last year.	Jowar or Cholum (*Sorghum Vulgare*). Present return.	Jowar or Cholum (*Sorghum Vulgare*). Next preceding return.	Jowar or Cholum (*Sorghum Vulgare*). Corresponding return of last year.
BENGAL—*concluded.*		S. Ch.	S. Ch.	S Ch.	S. Ch.	S. Ch.	S. Ch.	S. Ch.	S Ch.	S. Ch.	S. Ch.	S. Ch.	S. Ch.
Chittagong Division. 24	Tippera ...	...	...	...	...	...	...	11 0	10 8	8 14½	...	...	...
25	Noakhali ...	...	...	...	...	...	...	10 0	11 0	9 8	...	...	...
26	Chittagong ...	...	...	...	...	...	...	12 12	12 8	11 8	...	...	...
BIHAR.													
Patna Division. 27	Patna	14 0	13 4	13 0	19 0	19 0	17 0	11 0	10 8	12 4	*White* 16 0 *Raksa* 20 0	*White* 14 0 *Raksa* 21 0	17 0
28	Gaya ...	13 8	13 0	12 8	16 0	17 8	16 8	11 0	11 0	11 4	18 8	18 0	14 8
29	Shahabad ..	13 0	12 8	12 0	16 0	19 0	15 0	11 0	11 8	10 0	...	...	...
30	Saran ...	14 0	14 0	12 0	20 0	19 8	17 8	11 8	11 8	11 0	...	20 0	...
31	Champaran ..	13 8	13 0 to 14 0	13 0	22 0 to 24 0	22 0	21 0	12 8	12 8	12 0	...	..	...
32	Muzaffarpur ...	14 0	13 0	12 0	18 0	20 0	18 0	11 8	12 0	11 0	...	...	...
33	Darbhanga ...	13 8	13 8	12 15	18 11	19 12	22 0	11 4	11 4	13 3	...	...	...
Bhagalpur Division. 34	Monghyr ...	15 3	14 11	13 10	17 13	18 14	19 15	10 8	10 12	11 8	...	...	...
35	Bhagalpur ...	13 14	14 0	13 12	19 0	20 0	20 0	12 0	12 10	12 10	...	...	...
36	Purnea ...	12 0	12 0	16 0	...	...	...	11 0	11 0	12 0	...	...	...
37	Malda ...	16 0	17 0	13 0	...	...	...	11 8	11 0	10 0	...	...	...
38	Santhal Parganas.	10 8	10 8	10 0	15 0	15 0	15 0	13 0	12 0	13 0	...	...	...
ORISSA.													
Orissa Division. 39	Cuttack ...	13 2	13 2	10 8	...	...	...	12 7	12 7	12 7	...	...	...
40	Balasore ...	14 0	16 0	11 0	...	...	11 0	12 8 to 13 0	12 12 & 13 0	11 8	...	...	...
41	Angul ...	...	...	...	...	...	...	12 0	12 0	...	...	...	...
42	Puri ..	11 0	11 0	10 8	...	...	...	13 12	13 2	13 2	...	...	...
CHOTA NAGPUR.													
Chota Nagpur Division. 43	Hazaribagh ...	11 0	10 12	10 0	15 0	15 0	15 0	11 8	11 12	10 12	...	...	...
44	Ranchi ...	7 4 to 10 0	7 4 to 9 0	8 0 to 10 4	14 0	16 0	14 0	13 8	13 12	13 0	...	...	...
45	Palamau ...	10 2	10 2	10 2	14 1	14 1	12 15	10 2	9 13	10 2	...	...	...
46	Manbhum ...	11 8	12 0	11 0	16 0	20 0	16 0	12 0	12 8	11 9	22 0	14 0	16 0
47	Singhbhum ...	11 0	11 0	10 0	...	...	...	13 8	14 0	14 0	...	...	...

V. In the subdivisions the retail prices of salt per rupee are—Chandpur 9 seers ; Brahmanbaria 10 seers.
W. At Feni the retail price of salt is 9 seers per rupee.
X. Return from Cox's Bazar not received.
Y. In the subdivisions the retail prices of salt per rupee are—Barh 11 seers ; Dinapore 10 seers ; Bihar 10 seers.
Z. In the subdivisions the retail prices of salt per rupee are—Jahanabad 10 seers ; Nawada 10 seers ; Aurangabad 11 seers.
a. In the subdivisions the retail prices of salt per rupee are—Buxar 11 seers ; Bhabua 10½ seers ; Sasaram 10½ seers.
b. In the subdivisions the retail prices of salt per rupee are—Siwan 11 seers 6 chitaks ; Gopalganj (Mirganj) 12 seers 2 chitaks.
c. At Bettiah the retail price of salt is 10½ seers per rupee.
d. In the subdivisions the retail prices of salt per rupee are—Hajipur 10½ seers ; Sitamarhi 11 seers.
e. In the subdivisions the retail prices of salt per rupee are—Samastipur 10 seers ; Madhubani 10 seers 6 chitaks.
f. In the subdivisions the retail prices of salt per rupee are—Begusarai 10 seers ; Jamui 10 seers 8 chitaks.

CALCUTTA,
The 7th July 1902.

Station Bazars of the Districts of Bengal on the 30th June 1902—concld.

Salt. Present return.	Salt. Next preceding return.	Salt. Corresponding return of last year.	Wholesale prices per maund of 40 seers. Salt. Present return.	Wholesale prices per maund of 40 seers. Salt. Next preceding return.	Wholesale prices per maund of 40 seers. Salt. Corresponding return of last year.	Average wages per month. Unskilled labour—able-bodied agricultural labourer. Present return.	Unskilled labour—able-bodied agricultural labourer. Next preceding return.	Unskilled labour—able-bodied agricultural labourer. Corresponding return of last year.	Syce or horse-keeper. Present return.	Syce or horse-keeper. Next preceding return.	Syce or horse-keeper. Corresponding return of last year.	Skilled labour—common mason, carpenter or blacksmith. Present return.	Skilled labour—common mason, carpenter or blacksmith. Next preceding return.	Skilled labour—common mason, carpenter or blacksmith. Corresponding return of last year.	Districts.	Number.	
S. Ch.	S. Ch.	S. Ch	Rs. A. P.	Rs. A. P.	Rs. A. P.	Rs. A.	Rs. A.	Rs. A.	Rs. A.	Rs. A.	Rs. A.	Rs. A.	Rs. A.	Rs. A.	BENGAL—*constated*		
V 10 0	10 0	10 0	3 14 0	3 14 0	4 0 0	...	8 0	8 0	...	7 0 to 8 0	7 0 to 9 0	...	15 0	12 0 to 25 0	Tippera.	24	Chittagong Division.
W 9 4	9 0	9 0	4 0 0	4 2 0	4 8 0	9 6	10 12	7 8	7 0 to 8 0	7 0 to 8 0	7 0 to 8 0	10 0 to 15 0	15 0 to 20 0	10 0 to 15 0	Noakhali.	25	
X 10 0	10 0	9 0	Panga. 3 6 0	3 8 0	4 2 0	8 0 to 10 0	7 0 to 10 0	8 0 to 10 0	7 0 to 9 0	7 0 to 9 0	7 0 to 9 0	10 0 to 15 0	10 0 to 15 0	10 0 to 15 0	Chittagong.	26	
Y 10 8	10 8	10 0	Panga. 3 10 6	3 10 0	3 14 0	...	4 0 to 5 0	4 0 to 5 0	...	4 8 to 5 0	4 8 to 5 0	...	6 0 to 7 0	6 0 to 7 0	BIHAR. Patna.	27	Patna Division.
Z 11 0	11 0	10 0	3 9 6	3 9 6	3 14 0	4 0 to 5 0	3 8 to 5 0	3 8 to 5 0	4 0 to 5 0	3 0 to 5 0	3 0 to 5 0	6 0 to 12 0	6 0 to 12 0	6 0 to 12 0	Gaya	28	
a 10 0	10 0	10 0	4 0 0	4 0 0	4 0 0	4 11	4 11	4 11	4 0	5 8 to 6 0	5 8 to 6 0	7 8 to 9 6	5 8 to 9 6	7 8 to 9 6	Shahabad.	29	
b 11 0	11 0	10 0	3 10 0	3 10 0	4 0 0	3 12 to 5 10	3 12 to 5 10	3 12 to 5 10	4 0 to 10 0	5 0 to 8 0	4 0 to 10 0	7 8 to 10 0	7 8 to 11 4	7 8 to 10 0	Saran.	30	
c 10 8	10 8	10 0	3 13 0	3 13 0	4 0 0	...	4 0	4 0	...	4 0	4 0	...	6 0	6 0	Champaran.	31	
d 10 0	10 0	9 0	Panga. 4 0 0	4 0 0	4 8 6	3 0 to 4 0	3 0 to 4 0	3 0 to 4 0	3 0 to 4 0	3 0 to 4 0	3 0 to 4 0	7 0 to 8 0	6 0 to 8 0	7 0 to 8 0	Muzaffarpur	32	
e 11 0	11 0	10 0	3 10 0	3 10 0	4 0 0	3 12 to 5 0	3 12 to 5 0	3 12 to 5 0	3 0 to 5 0	3 0 to 5 0	3 0 to 5 0	5 10 to 10 5	5 0 to 12 0	3 12 to 12 0	Darbhanga.	33	
f 10 8	10 8	10 8	3 6 6	3 6 6	3 6 6	4 0 to 6 0	4 0 to 5 0	7 8	4 0 to 5 0	4 0 to 6 0	4 0 to 6 0	8 0 to 10 0	8 0 to 10 0	10 0 to 12 0	Monghyr	34	Bhagalpur Division.
g 10 12	10 12	10 0	3 9 0	3 9 0	4 0 0	6 8	6 8	5 10	5 0	5 0	5 0	6 0 to 10 0	6 0 to 10 0	7 8 to 12 0	Bhagalpur.	35	
h 10 0	10 0	9	Panga. 8 3 14 0	3 14 0	...	4 11 to 7 8	4 11 to 7 8	5 11 to 7 8	4 0 to 6 0	4 0 to 6 0	4 0 to 6 0	12 0 to 15 0	12 0 to 15 0	12 0 to 15 0	Purnea.	36	
i 9 8	10 0	9	Panga. 8 4 0 0	3 14 0	4 0 0	7 0	7 0	6 0 to 7 0	6 0	6 0	6 0	10 0 to 15 0	10 0 to 15 0	10 0 to 15 0	Malda.	37	
9 8	10 0	9	Karkatch. 4 0 0	3 14 0	4 2 0												
j 10 8	10 8	10 0	3 10 0	3 10 0	3 12 0	3 12 to 4 12	3 12 to 4 8	3 12 to 4 8	5 0 to 6 0	4 0 to 6 0	4 0 to 6 0	7 8 to 15 0	7 8 to 15 0	7 8 to 15 0	Santhal Parganas.	38	
k 13 0	13 0	12 0	Karkatch. 3 0 0	3 0 0	3 2 0	5 10	5 10	5 10	5 0	5 0	5 0	7 8 to 18 12	7 8 to 18 12	7 8 to 18 12	ORISSA. Cuttack	39	Orissa Division.
l 11 0	11 0	10 8	Panga. 3 8 0	3 8 0	3 12 0	5 0 to 6 0	4 11 to 5 0	5 0 to 6 9	4 0 to 8 0	4 0 to 5 0	4 0 to 7 0	9 6 to 11 0	9 6 to 11 4	9 6 to 15 0	Balasore.	40	
m 8 0	8 8	...	...	...	...	...	4 13½	...	...	3 0 to 4 0	...	...	11 10 to 15 8	...	Angul.	41	
n 13 0	12 14	13	4 3 1 0	3 2 0	3 0 0	...	6 0	4 0	...	6 0	6 0	...	9 0 to 11 0	7 8 to 10 0	Puri	42	
8 8	9 0	9	0 4 7 0	4 7 0	4 7 0	5 0 to 6 0	4 0 to 5 0	4 0 to 5 0	5 0 to 7 0	5 0 to 7 0	5 0 to 7 0	7 9 to 12 0	6 0 to 12 0	6 0 to 12 0	CHOTA NAGPUR. Hazaribagh.	43	Chota Nagpur Division.
9 4	9 4	8	Panga. 8 4 5 0	4 5 0	4 11 0	4 0	3 0	4 0	5 0	5 0	5 0	8 0	8 0	8 0	Ranchi.	44	
9 9	9 0	7	14 1 ...	...	...	6 1½	6 1½	6 1½	4 0 to 5 0	4 0 to 5 0	4 0 to 5 0	7 8 to 12 0	10 0 to 12 0	7 8 to 9 0	Palamau.	45	
o 10 0	10 12	9	Panga. 2 3 9 6	3 9 0	3 14 0	5 10 to 5 10	2 13 to 6 0	5 0 to 6 0	6 0	5 0 to 8 0	6 0	11 4 to 18 12	10 0 to 15 0	11 4 to 15 0	Manbhum.	46	
9 0	9 0	9 0	4 0 0	4 4 0	3 8 0	4 0	4 0	4 0	5 0	7 0	5 0	12 0 to 15 0	12 0	12 0	Singhbhum.	47	

g. In the subdivisions the retail prices of salt per rupee are—Banka 10 seers; Madhipura 9 seers; Supaul 10 seers.
h. In the subdivisions the retail prices of salt per rupee are—Kishanganj 9 seers; Arraria 9 seers.
i. At Balia Nawabganj the retail price of salt is 9½ seers per rupee.
j. In the subdivisions the retail prices of salt per rupee are—Deoghur 10 seers (panga); Godda 10 seers; Jamtara 11 seers; Pakaur 11 seers (karkatch); Rajmahal 11 seers.
k. In the subdivisions the retail prices of salt per rupee are—Jajpur 10 seers (panga); Kendrapara 10 seers (panga).
l. At Bhadrak the retail price of salt is 10½ seers per rupee.
m. In the marts in the interior of the district the retail prices of salt per rupee are—Sankhpur 9 seers; Bissipara 9 seers.
n. At Khurda the retail price of salt is 11½ seers per rupee.
o. At Gobindpur the retail price of salt is 10 seers 10 chataks per rupee.

Published for general information.

W. C. MACPHERSON,

PRICES-CURRENT (wholesale) of Food-grains, Firewood, &c.,

Number.	Marts.	Rice (best sort).			Common rice (*mota chaul*).			Wheat (*Triticum sativum*).			Barley (*Hordeum vulgare*).		
		Present return.	Next preceding return.	Corresponding return of last year.	Present return.	Next preceding return.	Corresponding return of last year.	Present return.	Next preceding return.	Corresponding return of last year.	Present return.	Next preceding return.	Corresponding return of last year.
1	2	3	4	5	6	7	8	9	10	11	12	13	14
		Rs. A. P.	Rs. A. P.	Rs. A. P.	Rs. A. P.	Rs. A. P.	Rs. A. P.	Rs. A. P.	Rs. A. P.	Rs. A. P.	Rs. A. P.	Rs. A. P.	Rs. A. P.
1	Calcutta ...	5 4 0	5 4 0	5 0 0	3 12 0	3 12 0	4 0 0	3 12 0	3 12 0	3 8 0	2 10 0	2 8 0	2 8 0
2	Burdwan ...	4 6 0	4 2 0	4 7 0	3 5 0	3 5 0	3 5 3	...	...	...	...	...	...
3	Midnapore ...	4 0 0	4 0 0	4 0 0	3 2 0	3 3 0	3 4 0	...	...	...	...	...	...
4	Pabna ...	6 10 0	6 10 0	6 8 0	3 12 6	3 12 0	3 12 0	2 8 6	2 8 6	2 15 0	...	...	...
5	Rangpur ...	5 0 0	5 0 0	6 0 0	3 8 0	3 8 0	3 14 0	3 12 0	3 12 0	4 0 0	...	...	...
6	Dacca ...	4 4 0	4 4 0	4 11 0	3 8 0	3 8 0	4 4 0	3 0 0	3 0 0	3 6 0	2 0 0	2 2 0	2 8 0
7	Chittagong ...	...	...	...	3 4 0	3 2 0	3 10 0	...	...	...	...	...	...
8	Patna ...	3 15 0	4 3 0	4 6 9	3 10 0	3 12 6	3 4 0	2 13 0	2 14 0	3 0 0	2 1 0	2 1 0	2 4 0
9	Muzaffarpur ...	5 0 0	5 0 0	4 7 0	3 5 3	3 3 0	3 5 3	2 12 0	2 15 3	3 1 3	2 1 6	1 15 3	2 1 6
10	Bhagalpur ...	4 0 0	3 15 0	3 15 0	3 5 0	3 4 0	3 3 3	2 14 0	2 13 0	2 14 0	2 1 6	2 1 0	2 0 0
11	Cuttack ...	4 2 0	4 4 0	3 15 0	3 0 6	3 0 0	3 0 0	2 14 0	2 14 6	3 9 0	...	...	...
12	Ranchi ...	4 10 9	4 10 9	4 4 0	2 15 3	3 1 6	3 1 0	4 0 0 to 5 8 0	4 7 0 to 5 8 0	3 14 0 to 5 0 0	2 13 6	2 8 0	2 13 9

Calcutta,

The 7th July 1902.

Juar or cholum (*Sorghum vulgare*).			Bajra or cumbu (*Pennisetum typhoideum*).			Marua or ragi (*Eleusine coracana*).			Gram, Chana, Chola, Kadalay, or Sunaga (*Cicer arietinum*).		
Present return.	Next preceding return.	Corresponding return of last year.	Present return.	Next preceding return.	Corresponding return of last year.	Present return.	Next preceding return.	Corresponding return of last year.	Present return.	Next preceding return.	Corresponding return of last year.
15	16	17	18	19	20	21	22	23	24	25	26
Rs. A. P.	Rs. A. P.	Rs. A P.	Rs. A. P.	Rs. A. P.	Rs. A. P	Rs. A. P.	Rs. A. P.	Rs. A. P.	Rs. A. P.	Rs. A. P.	Rs. A. P.
2 12 0	2 12 0	2 6 0	3 0 0	3 0 0	2 12 0	...	...	...	2 12 0	2 12 0	2 12 0
...	...	...	...	...	...	...	...	...	2 7 0	2 8 0	2 12 0
...	...	...	...	...	...	...	...	...	2 10 0	2 10 0	3 2 0
...	...	...	...	...	...	...	...	...	2 10 6	2 10 6	3 5 0
...	...	...	...	...	...	...	...	...	2 8 0	2 8 0	3 8 0
...	...	...	...	...	...	...	...	...	3 0 0	3 0 0	3 8 0
...	...	...	...	...	...	...	...	...	3 8 0	3 8 0	3 8 0
White. 2 8 0 / Rakan. 2 0 0	2 13 6 / 1 14 0	2 5 0	...	...	...	...	...	...	2 0 0	2 1 0	2 8 0
...	...	...	...	...	...	1 13 0	1 13 0	...	2 0 0	2 0 0	2 8 0
...	...	...	...	...	...	...	...	...	2 4 0	2 3 0	2 11 0
...	...	...	...	...	...	...	...	...	2 7 0	2 7 0	Buti or kalai. 3 0 0
...	...	...	...	...	...	...	...	...	3 0 0	3 0 0	3 8 9 to 3 13 0

Indian-corn or maize (*Zea mays*).			Arhar dal or Thur—Cadjan pea (*Cajanus indicus*).			Linseed.			Mustard and Rapeseed.		
Present return.	Next preceding return.	Corresponding return of last year.	Present return.	Next preceding return.	Corresponding return of last year.	Present return.	Next preceding return.	Corresponding return of last year.	Present return.	Next preceding return.	Corresponding return of last year.
27	28	29	30	31	32	33	34	35	36	37	38
Rs. A. P.	Rs. A. P.	Rs. A. P.	Rs. A. P.	Rs. A. P.	Rs. A. P.	Rs. A. P.	Rs. A. P.	Rs. A. P.	Rs. A. P.	Rs. A. P.	Rs. A. P.
...	3 0 0	3 0 0	4 0 0	3 12 0	3 12 0	7 0 0	7 0 0	6 8 0	5 0 0	5 0 0	4 12 0
...	...	...	3 5 0	3 5 0	4 1 6	...	...	...	4 12 0	4 12 0	5 0 0
									Black mustard.		
...	...	...	3 6 0 to 3 12 0	3 12 0	4 12 0	6 8 0	6 9 0	5 8 0	4 4 0 to 4 8 0	4 4 0 to 4 8 0	4 10 0 to 4 14 0
									Rapeseed.		
									5 0 0 to 5 2 0	4 5 0	4 6 0
...	...	...	4 1 0	4 1 0	5 5 0	6 6 0	6 6 0	6 2 0	4 6 0	4 6 0	5 6 0
3 0 0	3 0 0	3 0 0	4 8 0	4 8 0	5 0 0	...	...	...	4 8 0	4 8 0	6 0 0
...	...	...	4 0 0	3 12 9	4 0 0	...	...	...	...	...	...
...	...	...	4 8 0	4 12 0	5 8 0	...	...	...	4 12 0	4 12 0	5 12 0
2 0 0	2 1 0	2 5 0	2 7 6	2 8 0	2 10 0	6 0 0	7 0 0	5 0 0	4 3 0	4 6 0	5 0 0
2 0 0	2 0 0	2 5 6	2 10 0	2 10 6	3 1 3	...	...	...	...	...	...
									Rapeseed.		
2 4 0	2 1 6	...	3 2 6	3 2 0	3 11 6	6 8 0	6 8 0	...	4 6 0	4 0 0	5 0 0 to 5 11 0
									Mustard.		
									4 2 0	3 7 0	
...	...	...	2 4 0	2 2 6	3 0 0	...	...	...	4 0 9	3 15 0	4 1 8
...	...	...	6 15 0 to 6 2 6	6 2 6 to 6 15 0	4 13 6 to 5 8 0	6 10 0	6 10 0	5 0 0	5 11 0 to 5 0 0	5 0 0 to 5 5 0	5 0 0

Til or jinjili seed.			Sugar (raw).			Cotton, cleaned.			Jute.		
Present return.	Next preceding return.	Corresponding return of last year.	Present return.	Next preceding return.	Corresponding return of last year.	Present return.	Next preceding return.	Corresponding return of last year.	Present return.	Next preceding return.	Corresponding return of last year.
39	40	41	42	43	44	45	46	47	48	49	50
Rs. A. P.	Rs. A. P.	Rs. A. P.	Rs. A. P.	Rs. A. P.	Rs. A. P.	Rs. A. P.	Rs. A. P.	Rs. A. P.	Rs. A. P.	Rs. A. P.	Rs. A. P.
5 0 0	5 0 0	4 8 0	4 8 0	4 8 0	4 4 0	16 0 0	16 0 0	16 0 0	5 4 0	5 0 0	5 8 0
...	...	...	3 5 0	3 6 0	3 8 0	20 0 0	20 0 0	16 0 0	...	...	...
...	...	...	3 4 0 to 3 8 0	3 4 0 to 3 8 0	3 12 0 to 4 0 0	20 0 0	20 0 0	20 0 0	...	...	...
...	...	...	3 4 0	3 2 0	4 8 0	21 0 0	21 0 0	21 0 0	4 4 0	4 0 0	5 3 6
...	...	...	4 0 0	4 0 0	5 12 0	...	...	...	4 0 0	4 0 0	4 8 0
...	...	...	5 0 0	4 8 0	6 0 0	...	...	...	4 4 0	4 4 0	5 0 0
...	...	...	5 0 0	4 12 0	5 12 0	15 4 0	14 0 0	14 0 0	...	...	...
6 0 0	6 0 0	5 0 0	2 12 0	2 12 0	3 8 0	15 0 0	15 0 0	16 0 0	3 12 0	4 0 0	4 4 0
...	...	...	1 14 6	1 14 6	2 13 9	...	...	...	...	...	...
...	...	...	3 10 0	3 10 0	5 0 0	19 0 0	16 0 0	19 0 0	...	...	...
4 7 6	4 4 0	4 8 6	3 12 0	3 12 0	4 8 0	20 0 0	20 0 0	22 0 0	...	...	...
...	...	...	3 3 0 to 3 10 0	3 1 0 to 3 10 0	4 3 0 to 5 0 0	20 0 0	20 0 0	22 12 0	...	...	...

Ghi (clarified butter).			Tobacco leaf.			Hides (cow).			Grass.		
Present return.	Next preceding return.	Corresponding return of last year.	Present return.	Next preceding return.	Corresponding return of last year.	Present return.	Next preceding return.	Corresponding return of last year.	Present return.	Next preceding return.	Corresponding return of last year.
51	52	53	54	55	56	57	58	59	60	61	62
Rs. A. P.	Rs. A. P.	Rs. A. P.	Rs. A. P.	Rs. A. P.	Rs. A. P.	Rs. A. P.	Rs. A. P.	Rs. A. P.	Rs. A. P.	Rs. A. P.	Rs. A. P.
						Per 100 pieces.					
39 0 0	39 0 0	40 0 0	8 8 0	7 0 0	9 0 0	250 0 0	250 0 0	250 0 0	1 0 0	0 14 0	1 2 0
34 0 0	31 0 0	42 0 0	...	...	...	...	...	...	...	...	...
			Madhukhali.			Uncleaned per piece.					
33 0 0 to 33 4 0	33 8 0	40 0 0	5 4 0 to 5 8 0	5 4 0	6 0 0	1 6 0 to 2 6 0	1 6 0 to 2 6 0	1 0 0 to 2 2 0	...	...	...
			6 4 0	Pulta. 6 4 0	7 12 0	Cleaned per piece.					
						1 10 0 to 2 10 0	1 10 0 to 2 10 0	1 2 0 to 2 4 0			
53 0 0	53 0 0	53 0 0	6 12 0	6 12 0	8 0 0	...	...	...	...	...	...
32 0 0	32 0 0	44 0 0	10 0 0	10 0 0	9 0 0	...	...	...	0 2 6	0 2 6	0 2 6
						Per maund.					
40 0 0	40 0 0	43 0 0	7 0 0	6 0 0	9 0 0	20 0 0	20 0 0	25 0 0	0 3 0	0 3 0	0 3 0
						Per maund.					
34 0 0	34 0 0	42 0 0	10 0 0	10 8 0	14 8 0	16 8 0	17 8 0	18 4 0	...	...	...
30 0 0	31 0 0	38 0 0	4 0 0	4 0 0	3 0 0	...	...	...	0 6 0	0 6 0	0 4 0
29 1 6	29 1 6	35 9 0	8 0 0	8 0 0	8 0 0	...	...	...	...	...	...
33 0 0	32 0 0	37 0 0	8 0 0	8 0 0	...	...	...	...	...	...	...
						Per maund.					
35 4 0	39 0 0	45 12 0	4 4 0	4 4 0	4 0 0	25 0 0	25 0 0	25 0 0	0 8 0	0 8 6	0 8 6
						Per piece.					
36 0 0 to 40 0 0	36 0 0 to 40 0 0	36 5 3 to 41 2 0	6 10 0 to 13 5 3	6 10 0 to 13 5 3	6 10 6 to 13 0 0	1 4 0 to 2 8 0	1 4 0 to 2 8 0	1 0 0	0 5 3	0 5 3	0 4 0

994d

in the undermentioned Marts of Bengal on the 30th June 1902.

STRAW.			JUAR STALKS.			PRICES PER MAUND OF 40 STANDARD SEERS.									MARTS.
						IRON.			FIREWOOD.			SALT.			
Present return.	Next preceding return.	Corresponding return of last year.	Present return.	Next preceding return.	Corresponding return of last year.	Present return.	Next preceding return.	Corresponding return of last year.	Present return.	Next preceding return.	Corresponding return of last year.	Present return.	Next preceding return.	Corresponding return of last year.	
63	64	65	66	67	68	69	70	71	72	73	74	75	76	77	78
Rs. A. P.	Rs. A. P.	Rs. A. P.	Rs. A. P.	Rs. A. P.	Rs. A. P.	Rs. A. P.	Rs. A. P.	Rs. A. P.	Rs. A. P.	Rs. A. P.	Rs. A. P.	Rs. A. P.	Rs. A. P.	Rs. A. P.	
0 12 0	0 12 0	1 0 0	...	...	...	5 4 0	5 4 0	5 4 0	0 8 0	0 8 0	0 8 0	3 6 0 Panga.	3 6 0 Panga.	3 9 0	1. Calcutta.
0 10 0	0 9 0	0 13 0	...	...	...	...	...	...	0 8 0	0 8 0	0 6 0	3 3 0	3 4 0	3 8 0	2. Burdwan.
0 4 8	0 4 8	0 8 4	...	...	...	3 12 0 to 4 4 0	3 12 0 to 4 4 0	4 0 0 to 5 0 0	0 4 0	0 4 0	0 4 0	3 7 0 Panga.	3 7 0 Panga.	3 11 0	3. Midnapore
1 0 0	1 0 0	1 2 0	...	...	...	7 0 0	7 0 0	7 12 0	0 9 0	0 9 0	0 5 0	3 12 0 Panga.	3 12 0 Panga.	3 14 0	4. Pabna.
0 7 0	0 7 0	0 7 0	...	...	...	7 0 0	7 0 0	6 0 0	0 5 0	0 5 0	0 5 0	3 12 0 Panga.	3 12 0 Panga.	4 0 0	5. Rangpur.
...	...	...	...	...	...	5 8 0	5 8 0	6 0 0	0 5 3	0 5 3	0 5 6	3 9 0	3 8 0	3 14 0	6. Dacca.
...	...	...	...	...	...	4 12 0	4 12 0	6 0 0	...	...	...	3 6 0 Panga.	3 8 0 Panga.	4 2 0	7. Chittagong.
...	...	...	...	...	...	5 0 0	5 0 0	5 0 0	0 7 0	0 6 6	0 6 0	3 10 0 Panga.	3 10 0 Panga.	3 14 0	8. Patna.
...	...	...	...	...	...	5 11 6	5 11 6	5 11 6	0 4 0	0 4 0	0 4 0	4 0 0 Panga.	4 0 0 Panga.	4 3 6	9. Muzaffarpur.
...	...	...	...	...	...	5 0 0	5 0 0	5 8 0	0 6 0	0 5 9	0 6 3	3 9 0 Panga.	3 9 0 Panga.	4 0 0	10. Bhagalpur.
0 6 0	0 6 0	0 8 0	...	...	...	4 1 0	4 0 0	4 4 0	0 4 0	0 4 0	0 4 0	3 0 0 Karkatch.	3 0 0 Karkatch.	3 2 0	11. Cuttack.
...	No fixed rate ...	...	...	...	...	5 10 0	5 10 0	5 11 6	0 4 0	0 4 0	0 4 0	4 5 0 Panga.	4 5 0 Panga.	4 11 0	12. Ranchi.

W. C. MACPHERSON,
Offg. Secretary to the Govt. of Bengal.

IRRIGATION DEPARTMENT, BENGAL.

IRRIGATION OPERATIONS FOR THE OFFICIAL YEAR 1902-1903.

. Areas leased for Irrigation up to end of May 1902.

CIRCLE.	District.	Canal.	Estimated full discharge.	Average discharge in month.	Discharge utilised.	Approximate area of land irrigated during the year up to the end of the month.	Approximate area of land under irrigation up to the same date last year.	DETAILS OF AREAS LEASED.								Rainfall, 1902-1903.		Rainfall, 1901-1902.		REMARKS.
								Long-term leases.	Season leases.						Grand Total.	During month.	Up to end of month.	During month.	Up to end of month.	
									Kharif.	Rabi.	Sugarcane.	Bhadoi.	Hot-weather.	Total.						
1	2	3	4	5	6	7	8	9	10	11	12	13	14	15	16	17	18	19	20	21
			C. ft.	C. ft.	C. ft.	Acres.	Acres.	Acres.	Acres.	Acres.	Acres.	Acres.	Acres.	Acres.	Acres.	Inches.	Inches.	Inches.	Inches.	
ORISSA	Cuttack	Taldanda, 1st reach	1,342	98	.....	.....	.....	13,433	..	...	.....	.....	.....	... ..	13,433	5·51	7·00	0·25	0 25	Kulsai.
		Ditto, 2nd ,,	566	92																
		Machgaon	766	6	.....	.....	.....	29,002	.....	.....	.....	.....	.....	.....	29,002	2·15	4·55	2·2	2·55	Balia.
																3·74	4·77	2·20	2·40	Jagatsingpur.
		Kendrapara	1,100	268	28	16	.. ..	45,775	.....	... ..	5	.....	11	16	45,791	4·16	6·17	3·40	3·73	Kendupatna.
																3 75	5·44	1·39	2·97	Marsaghai.
		Gobri	378	44	27	.....	.. ..	3,427	.. ...	.....	.....	.....	.....	.....	3,427	4·41	6·32	1·61	3·65	Kendrapara.
		Do. Extension	648	34	17	.....	...	2,406	.....	.....	.....	.....	.....	.....	2,406	4·39	8·29	1·16	3·92	Ichapur.
		Patamundi	985	51	17	.....	.....	13,434	.....	.....	.....	.....	.....	.....	13,434	4·20	8·28	3·34	6·24	Nurtang.
		High Level, Range 1 ...	608	Nil	Nil	8	5	23,011	.....	.....	7	.....	1	8	23,019	3 40	8·41	3·12	3·76	Jenapur.
		Ditto, do. II .	727	.....	.....	.....	.....	4,548	.....	.....	.....	.....	.....	.....	4,548	No gauge.				
		Jajpur Canal, including Dudhai Channel ...	700	.....	.....	48	50	3,778	... ..	... ..	55	.....	19	74	3,852	4·59	7·19	2·50	3·39	Jajpur.
	Balasore ...	High Level, Range III ...	727	.....	.....	432	652	29,168	. ...	.....	179	.....	165	344	29,512	2·92	8·98	2·40	4·01	Akhoyapada.
		Total ...	.....	.....	.....	504	707	167,982	... ..	.....	246	... ..	196	442	168,424	.. ...	.....	.....	.....	
		Total of the corresponding period of last year ...	.....	.....	.....	.....	.....	133,936	.....	.... .	329	... ..	62	391	134,227	.....	.....	.....	.....	
SOUTH-WESTERN.	Midnapore	Midnapore	1,411	35·48	.....	.....	.....	57,001	.....	.....	.....	.....	.....	.....	57,001	7·22	13·37	4·00	7·52	30 days' discharging.
		Panchkura	522	23·12	.....	.....	.....	6,257	.....	.....	.....	.....	.....	.....	6,257	7·11	11·90	4·33	7·99	9 days' discharging.
	Howrah ..	Tidal Reaches, Ranges I & II	.....	.....	.....	... ..	.....	263	.....	.....	.....	.....	.....	... ..	263	8·86	13·55	4·37	5·70	
		Total ..	.....	.....	.....	.....	... ..	63,521	... ..	...	.....	.....	.....	.....	63,521	.....	.....	.....	.....	
		Total of the corresponding period of last year ...	.....	.....	.....	.....	.....	58,842	... ..	.....	.....	.....	.....	.....	58,842	.....	.....	.....	.....	
SONE	Shahabad ...	Western Main	4,342	822	84	970	1,169	15,741	.....	.....	.....	.....	947	947	16,691	0·20	1·67	1·57	1·57	
		Buxar	1,226	117	104	5,887	4,777	67,959	.....	.....	.....	.....	5,819	5,819	73,778					
		Arrah	2,000	590	460	16,320	15,284	126,477	.....	.....	.....	.....	15,803	15,803	142,280	1·26	1·78	2·33	2·33	
	Patna and Gaya.	Eastern Main	1,466	Canal closed		42	17	1,782	.....	.....	.....	.....	35	35	1,817	1·19	1·61	1·54	1·54	
		Patna				2,561	3,329	54,701	.....	.....	.....	.....	2,502	2,502	57,203					
		Total ...	.....	.....	.....	25,780	24,576	266,663	.....	.....	.....	.....	25,106	25,106	291,769	.....	.....	.....	.....	
		Total of the corresponding period of last year ...	.....	.....	.....	.....	.....	254,513	.....	.....	.....	.....	22,769	22,769	277,282	.....	.....	.....	.....	
		GRAND TOTAL ...	.....	.....	.....	26,284	25,283	498,166	.....	.....	246	.....	25,302	25,548	523,714	.....	.....	.....	.....	
		Grand Total of the corresponding period of last year	... ..	.....	.....	.....	.....	447,191	.... .	.....	329	.....	22,831	23,160	470,351	.....	.....	.....	.....	

DARJEELING,
The 5th July 1902.

R. C. EDGE,
Under-Secy. to the Govt. of Bengal.

IRRIGATION DEPARTMENT, BENGAL.

Abstract statement showing Tollage on Canals in Bengal classed as Major Works for the month of May 1902, as compared with that of the corresponding month of the previous year.

Canals.	Tollage, 1902-1903.		Tollage, 1901-1902.	
	During the month.	To end of the month.	During the month.	To end of the month.
1	2	3	4	5
Orissa Circle.	Rs. A. P.	Rs. A. P.	Rs. A. P.	Rs. A. P.
Taldanda Canal System	1,520 0 6	3,172 8 9	.....	.....
Kendrapara ditto	2,399 5 1	5,436 0 5	4,915 12 10	11,828 3 11
High Level, Range I	.....	1,637 18 0	.....	981 4 9
Ditto, „ II	.....	308 12 9	.....	240 4 6
Ditto, „ III	0 7 6	20 11 0	1 6 6	42 2 6
Jajpur Canal ...	.....	55 11 6	2 6 3	42 0 6
Total Orissa Circle ...	3,919 13 1	10,631 9 5	4,919 9 7	13,134 0 2
South-Western Circle.				
Midnapore Canal ...	8,408 7 0	17,108 10 0	10,391 3 9	18,393 3 6
Hijili Tidal Canal ...	4,979 10 0	10,004 14 6	6,244 13 3	12,286 15 0
Total South-Western Circle ...	13,388 1 0	27,113 8 6	16,636 1 0	30,680 2 6
Sone Circle.				
Patna Canal System ...	.....	1,679 14 9	1,677 15 0	4,399 13 6
Arrah ditto ...	1,145 9 6	2,190 4 3	2,021 4 0	3,248 1 9
Buxar ditto ...	357 4 3	746 3 9	279 13 3	607 7 0
Total Sone Circle ...	1,502 13 9	4,616 6 9	3,979 0 3	8,255 6 3
Grand Total ...	18,810 11 10	42,361 8 8	25,534 10 10	52,069 8 11

Assessed Tollage Receipts.

Canals.	Earnings, 1902-1903.		Earnings, 1901-1902.	
	During the month.	To end of the month.	During the month.	To end of the month.
1	2	3	4	5
	Rs. A. P.	Rs. A. P.	Rs A. P.	Rs. A. P.
Orissa Canals ...	3,919 13 1	10,631 9 5	4,919 9 7	13,134 0 2
Midnapore Canal ...	8,408 7 0	17,108 10 0	10,391 3 9	18,393 3 6
Hijili Tidal Canal ...	4,979 10 0	10,004 14 6	6,244 13 3	12,286 15 0
Sone Canals ...	1,502 13 9	4,616 6 9	3,979 0 3	8,255 6 3
Total ...	18,810 11 10	42,361 8 8	25,534 10 10	52,069 8 11

Darjeeling,
The 5th July 1902.

R. C. Edge,
Under-Secy. to the Govt. of Bengal.

IRRIGATION DEPARTMENT, BENGAL.

Abstract Statement showing Tollage on Canals in Bengal classed as Minor Works and Navigation for the month of May 1902, as compared with that of the corresponding month of the previous year.

Canals.	Tollage, 1902-1903.		Tollage, 1901-1902.	
	During the month.	To end of the month.	During the month.	To end of the month.
1	2	3	4	5
	Rs. A. P.	Rs. A. P.	Rs. A. P.	Rs. A. P.
Calcutta and Eastern Canals	16,789 9 0	33,732 10 3	15,079 13 3	28,358 3 6
Tolly's Nala ...	3,680 10 0	7,981 14 9	4,222 4 9	8,067 14 3
Total ...	20,470 3 0	41,714 9 0	19,302 2 0	36,426 1 9
Orissa Coast Canal ...	2,469 1 9	5,500 6 9	4,755 6 9	9,927 6 6
Nadia Rivers ...	4,259 9 0	8,085 12 0	2,496 11 6	5,282 7 6
Grand Total ...	27,198 13 9	55,300 11 9	26,554 4 3	51,635 15 9

Darjeeling,
The 5th July 1902.

R. C. Edge,
Under-Secy. to the Govt. of Bengal.

GOVERNMENT OF BENGAL, IRRIGATION DEPARTMENT.

Approximate return of traffic on the Circular and Eastern Canals for the week ending Saturday, the 5th July 1902, as compared with the corresponding week of the previous year.

Nature of Cargo.	Week ending Saturday, the 5th July 1902.			Week ending Saturday, the 6th July 1901.		
	Number of boats.	Weight of cargo.	Tollage.	Number of boats.	Weight of cargo.	Tollage.
		Mds.	Rs		Mds.	Rs.
Rice and paddy	456	53,475	621	245	26,606	350
Jute	17	13,850*	159	21	7,150†	131
Firewood	44	39,250	586	79	43,125	655
Other articles	488	1,20,245	1,416	647	1,43,377	1,779
Total ...	1,005	2,26,820	2,782	992	2,20,258	2,915

* Weight by canal measurement, 15,512½ maunds.
† Ditto ditto, 7,712½ „

Abstract of the Results of Meteorological Observations taken at the Alipore Observatory in the month of June 1902.

	Inches.	Date.	Hour.
The mean pressure of the month	29·573		
The average pressure of June from 24 years' registers ...	29·549		
The highest pressure in the month	29·764	2nd	10
The lowest pressure in the month	29·369	14th	16
The range of pressure	0·395		
	Hours.		
The total number of hours of bright sunshine during the month	120·7		
The maximum possible number of hours of sunshine ...	403·4		
	°		
The mean temperature of the month	85·7		
The average temperature of June from 24 years' registers ...	85·0		
The highest temperature in the month	97·5	23rd	
The lowest temperature in the month	70·7	4th	
The range of temperature during the month	26·8		
The mean daily range of temperature	13·5		
The greatest range of temperature in one day	22·0	23rd	
	Per cent.		
The mean humidity of the month	83		
The average humidity of June from 24 years' registers ...	81		
	Inches.		
The mean vapour tension of the month	1·025		
The average vapour tension of June from 9 years' registers ...	0·998		
The mean cloud proportion of the month	7·73		
The average cloud proportion of June from 25 years' registers	7·02		
	Inches.		
The total rainfall of the month	5·47		
The total rainfall indicated by a Beckley's self-registering rain-gauge (mouth of the gauge about 52 feet above the ground)	5·11		
The average fall of June from 48 years' registers ...	12·08		
The greatest fall in 24 hours	1·04	5th	
	Days.		
The number of rainy days in the month	13		
The average number of rainy days in June from 24 years' registers	19		
	°		
The mean maximum equilibrium temperature of solar radiation during the month	142·3		
The mean difference of sun and air temperatures	50·2		
The greatest sun temperature	152·6	27th	
The greatest excess of sun over air temperature	59·5	8th	
The mean temperature of the nocturnal radiation thermometer on woollen cloth	76·8		
The mean depression of the nocturnal radiation thermometer below the minimum air temperature at 4 feet above the ground	2·3		
The greatest depression of the nocturnal radiation thermometer below the minimum air temperature	3·3	2nd and 22nd	
	Miles.		
The mean movement of the wind per day	139·2		
The greatest movement of the wind in one day	231·0	20th	
The greatest movement of the wind in one hour	19·0	1st 11 to Noon 4th 9 to 10 a.m. 5th 7 to 8 p.m.	

The number of hours with winds from each of the eight points—
N. 24, N.E. 31, E. 69, S.E. 91, S. 272, S.W. 137, W. 49, N.W. 20, Calm 27.

The results of observations at the Alipore Observatory are not rigorously comparable with the registers of past years (at the Park Street Observatory). The barometer is about 3 feet higher at Alipore, and, other things being equal, reads therefore ·003 lower. The diurnal range of temperature is also greater at Alipore, and the mean temperature apparently about 0°·5 higher; and, finally, the thermometer which furnished the record of temperature at the Surveyor-General's Office during 20 years and upwards is found to read 0·6 higher than the Kew Standard thermometer, which is the standard of reference at the present Observatory.

G. W. KUCHLER,

METEOROLOGICAL OFFICE, GOVT. OF INDIA,
Alipore (Calcutta), the 7th July 1902.

for *Meteorological Reporter to the Govt. of India and Director-General of Indian Observatories.*

Results of the Meteorological Observations taken at the Alipore Observatory from 29th June to 5th July 1902.

Month.	Date.	Maximum in sun.	Number of hours of bright sunshine.	Mean pressure barometer at 32° Fahr.	Temperature.				Hygrometry.				Wind.		Rain.	Weather.
					Mean.	Maximum.	Range.	Minimum.	Mean wet bulb.	Vapour tension.	Dew point.	Humidity.	Prevailing direction.	Miles recorded.		
1902.		°		Inches.	°	°	°	°	°	Inch.	°	%			Inches.	
June	29th	137·9	Nil	29·568	87·1	89·7	6·4	83·3	84·2	1·135	83·1	88	SSW and S ...	205	Nil	Cloudy, o.
,,	30th	104·2	,,	·614	81·8	81·6	5·5	76·1	78·8	0·948	77·6	87	SSW and ESE ...	216	0·72	Cloudy, o, g, d, p.
July	1st	145·9	5·6	·605	84·2	90·0	14·3	75·7	79·9	·967	78·2	83	ESE, SSW and S	118	0·02	Chiefly cloudy, o, d.
,,	2nd	144·0	4·2	·583	83·7	91·5	14·2	77·3	80·3	·992	79·0	86	SSE, calm and variable.	70	0·63	Chiefly cloudy, o, d, p, t, ∠.
,,	3rd	141·9	4·0	·610	83·3	92·4	13·8	79·1	80·6	1·012	79·6	89	SSE, calm and variable.	87	2·62	Chiefly cloudy, o, g, d, p, t, ∠.
,,	4th	126·4	Nil	·685	80·9	85·1	8·8	76·3	76·9	0·872	75·1	83	ESE, SSE and S	124	0·44	Cloudy, o, p.
,,	5th	144·9	1·8	·695	84·0	88·1	8·6	79·5	79·2	·935	77·2	80	SE by E and ESE	117	0·34	Chiefly cloudy, o, d, p, t.

The mean pressure of the seven days	Inches.	29·623
The average pressure of the corresponding period for 24 years, Surveyor-General's Office		29·539
	Hours.	
The total number of hours of bright sunshine		15·1
The maximum possible number of hours of sunshine		94·2
	°	
The mean temperature of the seven days		83·6
The average temperature of the corresponding period for 24 years, Surveyor-General's Office		83·5
The extreme variation of temperature		16·7
The maximum temperature		92·4
	Miles.	
The highest velocity of the wind in one hour		15
	%	
The mean relative humidity		85
The average relative humidity of the corresponding period for 24 years, Surveyor-General's Office		85
	Inches.	
The total fall of rain from 29th June to 5th July 1902		4·77
The average fall of the corresponding period for 24 years, Surveyor-General's Office		3·59
The total fall from 1st January to 5th July 1902		26·33
The average fall of the corresponding period for 24 years, Surveyor-General's Office		24·05

The mean pressure, temperature, etc., are deduced from the traces of the Barograph and Thermograph, and from eye observations.

The maximum and minimum temperatures are obtained from self-registering thermometers. All the thermometers are verified and the readings have been corrected to a standard constructed and verified at the Kew Observatory. They are exposed under a thatched shed open at the sides, and are suspended four feet above the ground.

The barometer readings are corrected approximately to those of the standard, Newman's No. 86, formerly at the Surveyor-General's Office.

The hygrometric elements are obtained from Tables III, IV, and V of the official tables computed in the Meteorological Office, and based on Regnault's modifications of August's formula.

The directions and the movement of the wind are taken from the trace of a Beckley's anemograph.

The mouth of the rain-gauge is one foot above the ground.

o, overcast; g, gloomy; d, drizzling rain; p, passing temporary showers; t, thunder; ∠, lightning.

METEOROLOGICAL OFFICE, GOVT. OF INDIA,
Alipore (Calcutta), the 7th July 1902.

G. W. KÜCHLER,
for *Meteorological Reporter to the Govt. of India and Director-General of Indian Observatories.*

EAST INDIAN RAILWAY.

Statement of Goods Traffic in staples carried during the five weeks ending 29th March 1902 as compared with the same period of 1901.

Staples.	1901.		1902.		Increase.		Decrease.	
	Weight.	Freight.	Weight.	Freight.	Weight.	Freight.	Weight.	Freight.
	Mds.	Rs.	Mds.	Rs.	Mds.	Rs.	Mds.	Rs.
Apparel, including drapery, haberdashery, millinery, uniforms, accoutrements, boots and shoes	7,810	11,249	20,735	10,153	12,925	.....	.....	1,096
Coal & Coke carried for the public and foreign railways	1,52,87,343	20,50,522	1,42,12,179	20,49,062	.....	.....	10,75,164	1,460
Cotton—								
(1) Raw	1,88,307	88,960	1,92,940	1,00,832	4,543	11,872	.....	.....
(2) Manufactured—								
(a) Twist and Yarn, European	3,920	3,406	4,240	4,884	320	1,388	.....	.....
(b) Ditto, Indian	38,998	19,598	40,780	13,633	1,790	.....	.....	5,965
(c) Piece-goods, European	1,12,077	1,15,502	1,59,218	1,61,789	46,541	46,197	.....	.....
(d) Ditto, Indian	17,782	11,686	20,578	14,229	2,796	2,543	.....	.....
(e) Others	1,908	3,096	3,686	2,149	1,658	.....	.....	947
Chemicals excepting saltpetre	4,798	4,415	5,514	4,376	716	.....	.....	39
Drugs—								
1.—Intoxicating, other than opium	607	399	188	167	.....	.....	419	232
2.—Non-intoxicating	10,857	5,833	11,017	5,906	160	73	.....	.....
Dyes and Tans—								
1.—Al (Morinda citrifolia)	458	166	298	61	.....	.....	160	105
2.—Alizarine and aniline dyes	1,022	1,041	1,002	933	.....	.....	.....	108
3.—Cutch	945	881	2,513	1,191	1,568	310	.....	.....
4.—Indigo	1,704	1,630	7,946	5,848	6,242	4,218	.....	.....
5.—Myrabolams	22,219	7,611	19,908	5,840	.....	.....	2,311	1,771
6.—Tanning barks	20,116	1,739	16,276	1,661	.....	532	4,838	.....
7.—Turmeric	19,058	13,613	24,178	22,176	5,120	8,563	.....	.....
8.—Others	18,072	3,951	14,555	9,474	.....	5,523	3,517	.....
Fodder—								
1.—Oilcake	1,14,104	16,922	95,236	16,486	.....	.....	18,868	436
2.—Hay, straw and grass	34,468	3,578	83,579	15,117	49,111	11,539	.....	.....
Fruits and vegetables, fresh	18,203	6,005	14,909	9,400	.....	3,395	3,294	.....
Grain and Pulse—								
1.—Wheat	2,51,195	32,431	4,34,139	1,04,629	1,82,944	22,286	.....	.....
2.—Wheat flour	55,142	14,375	66,526	12,741	11,384	.....	.....	1,634
3.—Rice in the husk	73,038	10,422	69,073	9,121	.....	.....	2,655	1,301
4.—Rice not in the husk	8,90,322	1,61,085	6,61,501	1,43,494	.....	.....	2,28,661	17,591
5.—Jowar and bajra	1,99,994	25,692	61,353	8,780	.....	.....	1,38,641	16,912
6.—Gram and pulse	3,29,179	90,109	4 22,858	1,16,126	93,079	26,017	.....	.....
7.—Others	2,23,501	51,615	2,20,977	24,705	.....	.....	2,524	26,910
Hides and Skins—								
1.—Hides of cattle	1,19,582	68,282	65,290	35,784	.....	.....	54,292	32,498
2.—Skins of sheep, &c.	30,106	19,212	24,647	9,360	.....	.....	5,459	9,852
Horns	1,183	583	1,740	878	557	295	.....	.....
Hemp (Indian) and other fibres (excluding jute)	51,153	11,387	1,02,231	16,727	51,078	5,340	.....	.....
Jute—								
1.—Raw	85,140	13,845	2,14,960	43,435	1,29,820	29,590	.....	.....
2.—Gunny-bags and cloth	1,86,689	1,07,079	1,39,523	71,584	.....	.....	47,166	35,495
Lac	50,771	40,009	42,987	30,796	.....	.....	14,694	9,213
Leather—								
1.—Unwrought	2,370	4,136	3,126	5,638	856	1,502	.....	.....
2.—Wrought excepting boots and shoes	2,385	2,432	1,061	787	.....	.....	1,324	1,645
Liquors—								
1.—Ale and Beer	17,372	5,795	22,062	4,902	4,690	.....	.....	893
2.—Spirits of all kinds, including country spirit	1,509	1,829	2,862	2,200	1,053	371	.....	.....
3.—Wines	3,413	4,068	3,093	3,618	.....	.....	320	250
4.—All other sorts, including toddy and fermented liquor, other than ale and beer	187	59	236	58	49	.....	.....	1
Metals—								
1.—Brass, unwrought	2,737	1,689	1,904	647	.....	.....	833	1,042
2.— Do., wrought	16,567	6,304	17,607	7,705	1,000	1,401	.....	.....
3.—Copper, unwrought	210	128	100	52	.....	.....	110	76
4.— Do., wrought	1,060	724	1,922	1,687	836	963	.....	.....
5.—Iron and steel—								
(a) Cast	20,261	5,684	47,596	17,029	27,335	11,345	.....	.....
(b) Unwrought	86,488	5,454	64,386	2,988	.....	.....	22,102	2,466
(c) Wrought	87,101	37,111	1,18,737	51,683	31,636	14,572	.....	.....
(d) Manufactures of iron and steel	29,740	14,030	44,619	22,353	14,879	8,323	.....	.....
6.—Zinc and spelter	3,512	2,323	3,812	2,197	300	.....	.....	126
7.—Others	12,583	8,492	13,446	9,366	883	884	.....	.....
Oils—								
1.—Kerosine	1,94,480	66,443	1,65,054	58,447	.....	.....	28,826	7,996
2.—Castor	6,803	2,411	3,120	890	.....	.....	3,677	1,521
3.—Cocoanut	3,559	1,100	5,693	1,946	2,134	845	.....	.....
4.—Mustard and rape	21,239	10,325	9,541	3,303	.....	.....	11,698	12,932
5.—Others	4,436	2,235	5,861	3,484	1,425	1,049	.....	.....
Oilseeds—								
1.—Castor	87,825	21,229	1,07,431	22,308	19,606	1,079	.....	.....
2.—Earthnuts	41	6	129	39	88	33	.....	.....
3.—Linseed	2,43,999	60,673	3,69,820	98,873	1,25,821	35,200	.....	.....
4.—Poppy	3,469	887	2,984	511	.....	.....	1,075	376
5.—Rape and mustard	5,35,636	1,79,468	6,94,563	1,85,301	1,58,917	.....	.....	54,167
6.—Til or jinjili	1,63,927	40,474	22,761	4,173	.....	.....	1,41,066	36,301
7.—Others	42,187	8,271	1,41,781	30,590	99,614	22,319	.....	.....
Opium	54,898	67,005	69,766	75,786	14,870	8,781	.....	.....
Paper and pasteboard	21,929	12,372	22,310	15,382	481	3,010	.....	.....
Provisions—								
1.—Dried fruits and nuts	15,921	7,034	22,508	7,688	6,587	654	.....	.....
2.—Ghee	48,030	31,276	48,141	31,528	111	252	.....	.....
3.—Potatoes	2,62,232	31,115	1,60,327	38,647	.....	7,532	1,01,905	.....
4.—Others	41,651	31,126	46,163	31,424	4,512	298	.....	.....
Railway plant & rolling-stock carried for the public & foreign railways—								
1.—Locomotives, engines and tenders and parts thereof	23,609	1,359	1,127	24	.....	.....	22,482	1,335
2.—Carriages and trucks and parts thereof	8,441	4,563	282	69	.....	.....	8,159	4,494
3.—Materials—								
(a) Steel rails and fish-plates	20,668	3,463	15,896	4,773	.....	1,310	13,072	.....
(b) Sleepers and keys of steel and cast-iron	.....	.....	29,033	4,234	29,033	4,234	.....	.....
(c) Other sorts	75,396	19,857	68,993	15,247	.....	.....	6,403	4,610
Salt	5,30,564	89,360	.....	.....	.....	.....	5,30,564	89,360

Staples.	1901.		1902.		Increase.		Decrease.	
	Weight.	Freight.	Weight.	Freight.	Weight.	Freight.	Weight.	Freight.
	Mds.	Rs.	Mds.	Rs.	Mds.	Rs.	Mds.	Rs.
Saltpetre and other saline substances—								
1.—Saltpetre	35,766	19,119	98,135	33,035	62,369	13,916	.....	.....
2.—Other saline substances	38,361	11,140	57,547	18,749	19,186	7,609	.....	.....
Silk—								
1.—*Raw*—								
(*a*) Foreign	158	35	.....	.....	.....	.....	158	35
(*b*) Indian	2,028	998	2,182	1,169	154	183	.....	.....
2.—*Piece-goods*—								
(*a*) Foreign	32	94	.....	.....	.....	.....	32	94
(*b*) Indian	351	445	422	557	71	112	.....	.....
Spices—								
1.—Betelnuts	32,851	19,576	27,323	16,630	.....	.....	5,528	2,946
2.—Cardamoms	5,079	1,609	773	802	.....	.....	4,306	807
3.—Chillies	38,263	28,636	35,078	26,745	.....	.....	3,185	1,884
4.—Ginger	1,569	525	1,260	515	.....	.....	309	10
5.—Pepper	2,069	1,733	3,050	1,880	.....	147	19	.....
6.—Others	9,293	4,002	16,523	9,472	7,230	5,470	.....	.....
Stone and lime	5,55,655	74,770	10,15,104	1,37,141	4,59,449	62,371	.....	.....
Sugar—								
1.—Refined	22,492	5,255	54,892	16,156	32,400	10,901	.....	.....
2.—Unrefined—								
(*a*) Sugar	2,43,500	49,477	2,35,959	70,632	.....	21,155	7,541	.....
(*b*) *Gur*, *rab*, jaggree, molasses and other saccharine produce ...	7,44,964	1,26,410	4,50,818	79,899	.....	.....	2,94,146	47,511
Tea—								
1.—Foreign	.....	.....	.....	.....	.....	.....	.....	.....
2.—Indian	4,178	1,627	5,308	3,507	1,130	1,930	.....	.....
Tobacco	89,890	38,546	49,781	23,202	.....	.....	40,109	15,344
Wood—								
1.—Timber, unwrought	1,83,566	25,901	3,62,731	38,252	1,79,165	12,351	.....	.....
2.—Manufactures	20,099	7,647	17,381	6,843	.....	.....	2,718	804
Wool—								
1.—Raw	5,278	1,822	8,551	3,231	3,273	6,409	.....	.....
2.—Manufactured—								
(*a*) Carpets and rugs	4,728	2,305	3,182	2,096	.....	.....	1,546	209
(*b*) Piece-goods, European	10	25	114	33	104	8	.....	.....
(*c*) Ditto, Indian	1,315	1,131	1,305	1,310	.....	179	10	.....
(*d*) Other sorts of manufactures ...	4,245	1,991	1,966	2,473	.....	482	2,279	.....
All other articles of merchandise—								
1.—Bones	62,268	12,168	44,524	8,588	.....	.....	17,744	3,580
2.—Firewood	64,157	4,872	55,529	3,627	.....	.....	18,628	1,245
3.—Indigo seed	42,441	12,375	26,804	4,750	.....	.....	16,637	7,625
4.—Paints and colours	4,277	2,137	3,955	1,702	.....	.....	322	435
5.—Seeds other than oilseeds	15,421	3,331	2,527	1,048	.....	.....	12,894	2,283
6.—Others	17,42,522	4,50,640	14,99,891	3,82,033	.....	.....	2,42,631	68,407
Total ...	2,51,71,864	47,75,443	2,39,19,342	46,93,521	.....	.....	12,52,522	81,922
Military stores	16,711	30,026	18,129	39,373	1,418	8,447	.....	.....
Coal for railway	16,18,545	1,28,866	15,70,225	1,41,875	.....	13,009	48,320	.....
Railway materials	23,47,881	71,521	20,55,474	88,531	.....	17,010	1,92,407	.....
Live-stock	.....	—1,154	.....	20,360	.....	21,514	.....	.....
Total ...	2,90,55,001	50,00,802	2,75,63,170	49,63,660	.....	.....	14,91,831	16,942

T. Jackson, for *Chief Auditor.*

Traffic Audit Office, Goods Division, Calcutta, *the 3rd July 1902.*

EASTERN BENGAL STATE RAILWAY.

Abstract of Principal Commodities carried over the Eastern Bengal State Railway during the month of March 1902 as compared with the same month of the previous year.

No.	Staples.	1902.	1901.	Increase in 1902.	Decrease in 1902.	Explanations of fluctuations by Traffic Superintendent.
		Tons.	Tons.	Tons.	Tons.	
1	Apparel, including drapery, haberdashery, millinery, uniforms, accoutrements, boots and shoes.	50	35	15	.....	
2	Coal and coke carried for the Public and Foreign Railways.	29,521	29,763	.....	242	
3	Cotton—					
	(1) Raw	207	553	.....	346	
	(2) Manufactured—					
	(a) Twist and yarn, European	189	179	10	.....	
	(b) Ditto, Indian	256	220	36	.....	
	(c) Piece-goods, European	1,540	1,113	426	.....	
	(d) Ditto, Indian	56	54	2	.....	
	(e) Others	.....	.....	.....	.....	
4	Chemicals, excepting saltpetre	19	11	8	.....	
5	Drugs—					
	(1) Intoxicating, other than opium	19	13	6	.....	
	(2) Non-intoxicating—					
	(a) Medicinal preparations	.....	.....	.....	.....	
	(b) Others	73	48	25	.....	
6	Dyes and Tans—					
	(1) Al (Morinda citrifolia)	.....	.....	.....	.....	
	(2) Alizarine and Aniline dyes	.....	.....	.....	.....	
	(3) Cutch	13	18	.....	5	
	(4) Indigo	.....	.....	.....	.....	
	(5) Myrabolams	.....	.....	.....	.....	
	(6) Tanning barks	.....	.....	.....	.....	
	(7) Turmeric	195	335	.....	140	
	(8) Others	15	5	10	.....	
7	Fodder—					
	(1) Oilcake	486	629	.....	143	
	(2) Hay, straw and grass	2,898	3,458	.....	560	
8	Fruits and vegetables, fresh	767	430	337	.....	
9	Grain and pulse—					
	(1) Gram and pulse	5,500	3,494	2,006	.....	
	(2) Jawar and bajra	.....	.....	.....	.....	
	(3) Rice in the husk	7,114	10,037	.....	2,923	
	(4) Do. not in the husk	8,762	11,164	.....	2,402	
	(5) Wheat	80	115	.....	35	
	(6) Do. flour	83	101	.....	18	
	(7) Others	466	122	344	.....	
10	Hides and skins—					
	(1) Hides of cattle—					
	(a) Dressed or tanned	.....	.....	.....	.....	
	(b) Raw	723	586	137	.....	
	(2) Skins of sheep and other animals—					
	(a) Dressed or tanned	.....	.....	.....	.....	
	(b) Raw	37	82	.....	45	
11	Horns	6	2	4	.....	
12	Hemp (Indian) and other fibres, excluding jute.	368	769	.....	401	
13	Jute—					
	(1) Raw	27,944	11,428	16,516	.....	
	(2) Gunny-bags and cloth	1,170	1,092	78	.....	
14	Lac	30	124	.....	94	
15	Leather—					
	(1) Unwrought	.....	.....	.....	.....	
	(2) Wrought, excepting boots and shoes	.....	1	.....	1	
16	Liquors—					
	(1) Ale and beer	30	25	5	.....	
	(2) Spirits of all kinds, including country spirit.	70	.....	70	.....	
	(3) Wine	14	50	.....	36	
	(4) All other sorts, including toddy and fermented liquor, other than ale and beer.	.....	.....	.....	.....	
17	Metals—					
	(1) Brass, unwrought	49	11	38	.....	
	(2) Do., wrought	107	142	.....	35	
	(3) Copper, unwrought	8	14	.....	6	
	(4) Do., wrought	13	13	1	.....	
	(5) Iron and steel—					
	(a) Cast	41	164	.....	123	
	(b) Unwrought	.....	.....	.....	.....	
	(c) Wrought	1,244	1,255	.....	11	
	(d) Manufactures	405	351	54	.....	
	(6) Others	347	248	99	.....	
18	Oils—					
	(1) Kerosine	7,760	8,657	.....	897	
	(2) Castor	17	8	9	.....	
	(3) Cocoanut	122	63	59	.....	
	(4) Mustard and rape	152	408	.....	256	
	(5) Others	147	45	102	.....	
19	Oilseeds—					
	(1) Castor	.....	.....	.....	.....	
	(2) Earthnuts	8,023	913	7,110	.....	
	(3) Linseed	.....	.....	.....	.....	
	(4) Poppy	6,263	2,709	3,554	.....	
	(5) Rape and mustard	60	12	48	.....	
	(6) Til or jinjili	188	.....	188	.....	
	(7) Others	2	1	1	.....	
20	Opium	360	436	.....	76	
21	Paper and pasteboard					
22	Provisions—					
	(1) Dried fruits and nuts	14	.....	14	.....	
	(2) Ghee	55	44	11	.....	
	(3) Others	629	556	73	.....	

No.	Staples.	1902.	1901.	Increase in 1902.	Decrease in 1902.	Explanations of fluctuations by Traffic Superintendent.
		Tons.	Tons.	Tons.	Tons.	
23	Railway Plant, &c., for the Public and Foreign Railways—					
	(1) Locomotive engines and tenders and parts thereof	.....	2	.....	2	
	(2) Carriages and trucks and parts thereof	.....	.....	.....	.....	
	(3) Materials—					
	(a) Steel rails and fish-plates	.....	.....	.....	.....	
	(b) Sleepers and keys of steel and cast-iron.	1,798	101	1,697	.....	
	(c) Others	328	413	.....	85	
24	Salt	4,844	4,814	30	.....	
25	Saltpetre and other saline substances—					
	(1) Saltpetre	.....	8	.....	8	
	(2) Other saline substances	210	64	146	.....	
26	Silk—					
	(1) Raw—					
	(a) Foreign	.....	.....	.....	.....	
	(b) Indian	17	23	.....	6	
	(2) Piece-goods—					
	(a) Foreign	.....	.....	.....	.....	
	(b) Indian	.....	.....	.....	.....	
27	Spices—					
	(1) Betelnuts	666	639	27	.....	
	(2) Cardamoms	10	18	.....	8	
	(3) Chillies	486	174	312	.....	
	(4) Ginger	70	60	10	.....	
	(5) Pepper	29	18	11	.....	
	(6) Others	93	93	.....	.....	
28	Stone and lime	3,114	1,663	1,451	.....	
29	Sugar—					
	(1) Refined or crystallized, including sugar-candy.	452	468	.....	16	
	(2) Unrefined—					
	(a) Sugar	1,080	1,102	.....	22	
	(b) Gur, *rab*, jaggery, molasses, and other saccharine produce.	902	1,511	.....	609	
30	Tea—					
	(1) Foreign	.....	.....	.....	.....	
	(2) Indian	23	40	.....	17	
31	Tobacco—					
	(1) Unmanufactured	1,092	2,204	.....	1,112	
	(2) Manufactured—					
	(a) Cigars	24	12	12	.....	
	(b) Other sorts					
32	Wood—					
	(1) Timber, unwrought	883	929	.....	46	
	(2) Manufactures	233	194	39	.....	
33	Wool—					
	(1) Raw	241	180	61	.....	
	(2) Manufactured—					
	(a) Carpets and rugs					
	(b) Piece-goods, European	.....	2	.....	2	
	(c) Ditto, Indian					
	(d) Other sorts of manufactures ...					
34	All other articles of merchandise	8,239	6,455	1,784	.....	
	Total ...	139,250	113,302	36,976	11,028	

HARPRASAD DAR,

CALCUTTA, *the 2nd July 1902.* *for Examiner of Accounts, E. B. S. Railway.*

Weekly Return of Traffic Receipts on Indian Railways.

EAST INDIAN RAILWAY.

Approximate Return of Traffic for week ended 21st June 1902 on 1,905·37 miles open.

	Coaching Traffic.		Merchandise and Mineral Traffic.		Other earnings (estimated).	Total earnings.	Traffic Train-miles run.		
	Number of passengers.	Coaching receipts.	Weight carried.	Receipts.			Coaching.	Merchandise.	Total‡
		Rs. A. P.	Mds. S.	Rs. A. P. (a)	Rs. A. P.	Rs. A. P.			
Total traffic for the week ...	469,641	4,00,761 6 0	52,35,390 0	8,78,567 13 0	25,861 0 0	13,05,190 3 0	107,263	199,850	307,113
Or per mile of railway ...	.....	210 5 4	.....	461 1 7	13 9 2	685 0 1	.....	.....	.....
For previous 23½ weeks of half-year.	9,413,244*	89,88,903 12 0*	13,01,31,981 30†	2,44,97,468 11 0†	5,04,098 0 0‡	3,40,80,470 7 0	2,543,763§	4,904,803§	7,448,566
Total for 24½ weeks ...	9,882,885	93,89,665 2 0	14,13,67,371 30	2,53,76,036 8 0	5 19,959 0 0	3,53,85,660 10 0	2,651,026	5,104,653	7,755,679
COMPARISON.									
Total for corresponding week of previous year.	436,256	3,96,624 3 1	54,90,687 30	10,50,436 4 8	18,692 12 4	14,65,753 4 1	105,122‡	203,073‡	308,195‡
Per mile of railway corresponding week of previous year.	.....	215 13 8	.....	571 10 11	10 2 0	797 11 4	.....	.....	.....
Total for corresponding 24½ weeks of previous year.	9,809,622	95,48,323 11 9	13,69,97,992 30	2,48,10,394 3 10	5,24,289 8 4	3,48,83,007 7 11	2,629,438§	5,033,333§	7,662,772‡

(a) The decrease is chiefly in coal, food-grains, and seed traffic.
* Added number of passengers 5,248 and deducted Rs. 872
† Deducted Mds. 1,69,604 and ,, 1,016 } on account of difference between the approximate and audited figures for the week ended 17th
‡ Added ,, 6,733 } May 1902.
§ Audited figures up to 17th May 1902.

1902. *Abstract of progressive weekly returns of all earnings for 1902 in comparison with 1901.*

Open mileage.	Period.	Coaching Traffic.		Merchandise and Mineral Traffic.		Other earnings.	Total.	Per mile of railway.	Train mileage.	
		No. of passengers.	Rs.	Mds.	Rs.	Rs.	Rs.	Rs.	No.	Rate. Rs. A. P.
* 1,837·46	11 days of Jan.	514,256	5,30,478	87,38,287	16,37,681	35,240	22,03,299	1,199	477,511	4 9 10
* 1,837·46	Week ended 18th ,,	372,213	3,44,786	50,37,026	9,42,201	22,393	13,09,470	713	301,302	4 5 6
* 1,838·04	,, ,, 25th ,,	306,471	3,57,440	62,64,936	10,66,158	27,348	14,50,946	789	315,092	4 10 2
* 1,838·04	,, ,, 1st Feb. ...	350,913	3,62,584	58,41,061	10,58,973	23,674	14,45,231	786	309,272	4 10 9
* 1,838·04	,, ,, 8th ,, ...	401,030	4,36,654	54,35,792	9,91,956	24,720	14,53,330	790	313,589	4 10 2
* 1,838·04	,, ,, 15th ,, ...	384,376	3,87,799	59,18,493	10,00,741	24,885	14,13,425	781	313,802	4 8 1
* 1,838·04	,, ,, 22nd ,, ...	420,832	4,02,919	57,93,285	10,30,812	26,991	14,60,522	795	315,898	4 10 0
* 1,838·04	,, ,, 1st March...	409,196	4,02,809	57,06,772	10,86,121	23,875	15,12,805	823	320,960	4 11 5
* 1,838·04	,, ,, 8th ,, ...	442,705	4,35,751	56,86,936	10,35,653	23,477	14,94,881	813	318,375	4 11 2
* 1,838·04	,, ,, 15th ,, ...	420,558	4,15,553	53,91,908	9,50,807	25,180	13,91,540	757	308,662	4 8 2
* 1,838·04	,, ,, 22nd ,, ...	385,421	4,12,265	55,25,831	10,10,404	27,657	14,50,416	789	316,887	4 9 3
* 1,838·04	,, ,, 29th ,, ...	352,747	3,70,815	47,04,663	8,22,537	22,588	12,15,935	663	304,485	3 15 11
* 1,838·04	,, ,, 5th April ...	376,494	3,83,340	54,53,125	9,60,539	24,132	13,68,020	744	306,385	4 7 5
* 1,838·04	,, ,, 12th ,, ...	388,982	3,48,170	59,47,685	11,13,803	22,565	14,84,538	808	323,691	4 9 5
* 1,838·04	,, ,, 19th ,, ...	395,171	3,59,987	62,66,999	11,22,041	27,143	15,09,151	821	324,748	4 10 4
* 1,838·04	,, ,, 26th ,, ...	420,878	3,76,797	62,30,565	11,16,880	26,919	15,19,596	827	323,190	4 11 6
* 1,838·90	,, ,, 3rd May ...	419,769	3,84,258	64,19,420	11,57,199	25,205	15,66,662	839	328,806	4 12 3
* 1,905·37	,, ,, 10th ,, ...	471,948	3,82,051	65,19,006	11,33,638	26,151	15,41,840	809	333,729	4 9 11
* 1,905·37	,, ,, 17th ,, ...	444,015	3,66,445	61,51,671	11,33,699	30,989	15,31,133	804	331,173	4 10 0
1,905·37	,, ,, 24th ,, ...	420,946	3,62,201	59,82,250	10,83,780	24,662	14,70,703	772	320,769	4 9 4
1,905·37	,, ,, 31st ,, ...	406,679	3,67,954	56,99,682	10,33,759	26,557	14,28,300	750	315,935	4 8 4
1,905·37	,, ,, 7th June ...	410,167	4,02,376	56,58,894	10,46,642	25,639	14,74,657	774	314,410	4 11 1
1,905·37	,, ,, 14th ,, ...	430,448	3,96,423	56,88,135	9,61,663	26,083	13,84,170	726	312,875	4 6 9
1,905·37	,, ,, 21st ,, ...	469,641	4,00,761	52,35,390	8,78,568	25,861	13,05,190	685	307,113	4 4 0
	Totals up to date ...	9,882,885	93,89,665	14,13,67,372	2,53,76,037	6,19,959	3,53,85,661	775	7,755,679	4 9 0

* Audited figures.

Abstract of progressive weekly returns of all earnings for 1902 in comparison with 1901—concluded. *1901.*

		No. of passengers.	Rs.	Mds.	Rs.	Rs.	Rs.	Rs.	No.	Rate. Rs. A. P.
1,840·32	12 days of Jan. ...	547,806	5,51,440	81,80,264	14,01,457	31,128	19,84,034	1,078	504,735	3 14 11
1,837·46	Week ended 19th ,, ...	386,696	4,06,970	59,61,885	8,93,150	12,302	13,19,488	718	293,648	4 7 11
1,837·46	,, ,, 26th ,, ...	401,809	4,35,561	55,25,923	8,73,194	19,646	13,28,401	723	300,096	4 6 10
1,837·46	,, ,, 2nd Feb. ...	427,911	4,37,311	56,02,489	9,03,969	21,404	13,62,684	742	298,708	4 9 0
1,837·46	,, ,, 9th ,, ...	440,078	4,42,255	57,28,923	9,79,358	23,788	14,45,351	787	304,005	4 12 1
1,837·46	,, ,, 16th ,, ...	426,574	4,58,190	56,70,006	9,83,444	123,808	14,65,442	798	302,788	4 13 5
1,837·46	,, ,, 23rd ,, ...	465,830	4,81,259	52,50,599	9,04,699	91,314	14,07,272	766	292,702	4 12 11
1,837·46	,, ,, 2nd March	434,319	4,39,873	58,09,541	9,88,007	21,327	14,49,207	789	300,404	4 13 3
1,837·46	,, ,, 9th ,, ...	401,951	4,22,582	53,80,201	9,40,403	24,069	13,84,414	753	303,550	4 9 0
1,837·46	,, ,, 16th ,, ...	404,134	4,13,694	50,00,765	9,02,079	22,210	13,37,983	755	305,741	4 8 5
1,837·46	,, ,, 23rd ,, ...	362,038	3,75,362	55,66,466	9,33,312	23,037	13,31,711	752	298,025	4 10 2
1,837·46	,, ,, 30th ,, ...	376,859	3,69,722	62,78,839	10,44,486	22,325	14,36,533	783	305,729	4 11 2
1,837·46	,, ,, 6th April...	328,230	3,45,970	55,50,196	10,20,611	20,194	13,86,775	755	318,009	4 5 9
1,837·46	,, ,, 13th ,, ...	348,885	3,13,192	57,27,837	11,07,079	18,687	14,38,958	783	322,300	4 7 5
1,837·46	,, ,, 20th ,, ...	362,372	3,53,075	60,11,929	11,25,806	13,408	15,02,289	818	325,796	4 9 9
1,837·46	,, ,, 27th ,, ...	352,309	3,45,807	58,04,780	10,79,165	20,799	14,45,771	787	320,508	4 8 3
1,837·46	,, ,, 4th May ...	368,384	3,49,575	55,00,009	11,04,448	20,825	14,74,848	803	323,420	4 9 0
1,837·46	,, ,, 11th ,, ...	388,203	3,32,611	53,88,315	10,75,138	22,616	14,30,365	778	323,430	4 6 9
1,837·46	,, ,, 18th ,, ...	395,035	3,37,288	61,50,305	11,83,074	21,269	15,41,631	839	325,074	4 11 11
1,837·46	,, ,, 25th ,, ...	390,022	3,44,066	52,14,899	10,75,598	22,404	14,42,758	785	333,343	4 5 3
1,837·46	,, ,, 1st June ...	428,804	3,81,038	52,70,259	10,49,459	21,381	14,51,878	790	325,547	4 7 4
1,837·46	,, ,, 8th ,, ...	460,795	4,15,046	56,57,540	10,73,022	23,627	15,11,695	823	318,024	4 11 11
1,837·46	,, ,, 15th ,, ...	473,753	3,98,897	56,04,364	10,18,340	19,929	14,37,166	782	308,130	4 10 7
1,837·46	,, ,, 22nd ,, ...	436,256	3,90,635	54,90,688	10,50,436	18,693	14,65,753	798	308,195	4 12 1
	Totals up to date ...	9,809,622	95,48,324	13,69,97,993	2,48,10,394	5,24,290	3,48,83,007	768	7,662,772	4 8 10

TARKESSUR BRANCH RAILWAY.

Approximate Return of Traffic for week ended 21st June 1902 on 22·23 miles open.

	Coaching Traffic.		Merchandise and Mineral Traffic.		Other earnings (estimated).	Total earnings.	Traffic Train-miles run.		
	No. of passengers.	Coaching receipts.	Weight carried.	Receipts.			Coaching.	Merchandise.	Total.
		Rs. A. P.	Mds. s.	Rs. A. P.	Rs. A. P.	Rs. A. P.			
Total traffic for the week ...	(a)20,390	(a)6,350 2 0	11,160 0	415 6 0	9 0 0	6,774 8 0	1,073	115	1,188
Or per mile of railway	.....	285 10 6	.....	18 10 11	0 6 6	304 11 11	.....	.....	.....
For previous 23½ weeks of half-year.	582,579*	1,47,481 6 0*	4,53,084 20†	18,026 0 0†	205 0 0	1,65,712 6 0	25,396‡	3,116‡	28,512
Total for 24½ weeks ...	608,969	1,53,831 8 0	4,64,244 20	18,441 6 0	214 0 0	1,72,486 14 0	26,469	3,231	29,700
COMPARISON.									
Total for corresponding week of previous year.	21,120	4,893 9 4	18,284 10	619 8 0	5 2 3	5,518 3 7	1,087	101	1,188
Per mile of railway corresponding week of previous year.	.....	220 2 2	.....	27 13 11	0 3 3	248 3 9	.....	.....	.....
Total for corresponding 24½ weeks of previous year.	630,362	1,57,676 7 6	4,63,676 10	19,122 3 0	188 13 3	1,76,987 7 9	26,023	3,077	29,700

(a) The increase is due to "Dushorra" and "Suanjatra" festivals.

* Added No. of passengers 712 and Rs. 130 } On account of difference between the approximate and audited figures for the week ended 17th May
† Do. Mds. 820 and .. 4 } 1902.

‡ Audited figures up to 17th May 1902.

1902. *Abstract of progressive weekly returns of all earnings for 1902 in comparison with 1901.*

Open mileage.	Period.	Coaching Traffic.		Merchandise and Mineral Traffic.		Other earnings.	Total.	Per mile of railway.	Train mileage.	
		No. of passengers.	Rs.	Mds.	Rs.	Rs.	Rs.	Rs.	No.	Rate. Rs. A. P.
*22·23	11 days of Jan. ...	31,035	7,209	32,335	1,254	16	8,479	381	1,914	4 6 11
*22·23	Week ended 18th ,, ...	21,540	4,939	13,778	544	9	5,492	247	1,188	4 10 6
*22·23	,, ,, 25th ,, ...	22,871	5,508	32,380	839	7	6,352	286	1,188	5 5 7
*22·23	,, ,, 1st Feb. ...	20,960	4,673	20,284	777	3	5,453	254	1,188	4 12 2
*22·23	,, ,, 8th ,, ...	20,347	4,911	21,300	808	12	5,731	258	1,188	4 13 2
*22·23	,, ,, 15th ,, ...	20,433	4,860	19,765	807	5	5,681	256	1,188	4 12 6
*22·23	,, ,, 22nd ,, ...	27,757	6,789	23,419	874	10	7,673	345	1,188	6 7 4
*22·23	,, ,, 1st March	25,217	5,983	25,912	911	9	6,909	311	1,188	5 13 1
*22·23	,, ,, 8th ,, ...	35,938	9,731	25,488	932	6	10,675	480	1,232	8 10 8
*22·23	,, ,, 15th ,, ...	28,282	6,847	20,727	887	14	7,748	349	1,288	5 15 6
*22·23	,, ,, 22nd ,, ...	24,519	6,119	21,144	909	7	7,033	316	1,188	5 14 9
*22·23	,, ,, 29th ,, ...	23,183	5,775	20,503	784	7	6,566	295	1,188	5 6 5
*22·23	,, ,, 5th April	26,153	6,023	25,290	765	9	7,396	333	1,188	6 3 7
*22·23	,, ,, 12th ,, ...	39,346	11,171	18,948	809	12	11,992	539	1,320	9 1 4
*22·23	,, ,, 19th ,, ...	36,141	11,853	14,017	826	10	12,694	571	1,364	9 4 11
*22·23	,, ,, 26th ,, ...	21,448	5,895	17,728	814	10	6,709	302	1,188	5 10 4
*22·23	,, ,, 3rd May ...	22,815	5,403	19,816	724	8	6,135	276	1,188	5 2 8
*22·23	,, ,, 10th ,, ...	25,311	6,202	14,010	630	8	6,930	312	1,188	5 13 4
*22·23	,, ,, 17th ,, ...	23,748	5,340	14,883	525	8	5,892	265	1,188	4 15 3
22·23	,, ,, 24th ,, ...	21,878	5,412	12,195	700	8	6,120	275	1,188	5 2 5
22·23	,, ,, 31st ,, ...	20,494	5,023	13,101	719	9	5,751	259	1,188	4 13 5
22·23	,, ,, 7th June ...	20,550	5,469	10,577	613	9	6,091	274	1,188	5 1 11
22·23	,, ,, 14th ,, ...	22,721	5,450	14,524	569	9	6,028	271	1,188	5 1 2
22·23	,, ,, 21st ,, ...	26,390	6,350	11,160	416	9	6,775	305	1,188	5 11 3
	Totals up to date ...	608,969	1,53,831	4,64,245	18,442	214	1,72,487	316	29,700	5 12 11

* Audited figures.

Abstract of progressive weekly returns of all earnings for 1902 in comparison with 1901—concluded. *1901.*

		No. of passengers.	Rs.	Mds.	Rs.	Rs.	Rs.	Rs.	No.	Rate. Rs. A. P.
22·23	12 days of Jan. ...	33,281	7,800	24,778	1,111	5	8,916	401	2,068	4 5 0
22·23	Week ended 19th ,, ...	20,171	4,583	14,418	533	11	5,127	231	1,188	4 5 1
22·23	,, ,, 26th ,, ...	22,762	5,482	12,236	763	5	6,250	281	1,188	5 4 2
22·23	,, ,, 2nd Feb. ...	25,458	6,499	15,999	625	4	7,032	316	1,188	5 14 9
22·23	,, ,, 9th ,, ...	27,779	6,877	23,441	943	6	7,826	358	1,188	6 9 5
22·23	,, ,, 16th ,, ...	24,473	5,845	23,577	939	6	6,790	305	1,188	5 11 5
22·23	,, ,, 23rd ,, ...	37,141	9,943	21,136	846	10	10,799	486	1,188	9 1 5
22·23	,, ,, 2nd Mar. ...	23,256	5,630	21,865	898	8	6,552	295	1,188	5 8 3
22·23	,, ,, 9th ,, ...	26,690	6,690	21,807	922	8	7,620	343	1,188	6 6 8
22·23	,, ,, 16th ,, ...	22,698	5,739	21,930	904	11	6,714	302	1,188	5 10 5
22·23	,, ,, 23rd ,, ...	24,908	6,114	20,433	786	3	6,903	311	1,188	5 13 0
22·23	,, ,, 30th ,, ...	22,646	5,556	26,349	1,223	9	6,788	305	1,188	5 11 5
22·23	,, ,, 6th April ...	29,185	7,704	20,336	749	9	8,462	381	1,144	7 6 4
22·23	,, ,, 13th ,, ...	42,011	12,411	20,984	732	4	13,137	591	1,308	10 1 11
22·23	,, ,, 20th ,, ...	33,421	9,297	16,937	987	8	10,292	463	1,386	7 6 10
22·23	,, ,, 27th ,, ...	22,870	5,040	19,058	725	15	6,380	287	1,188	5 5 11
22·23	,, ,, 4th May ...	25,593	6,619	16,121	672	7	7,298	328	1,188	6 2 3
22·23	,, ,, 11th ,, ...	26,340	6,092	18,979	793	6	6,891	310	1,188	5 12 10
22·23	,, ,, 18th ,, ...	22,858	5,464	15,496	623	12	6,098	274	1,188	5 2 2
22·23	,, ,, 25th ,, ...	21,123	5,060	18,820	760	15	5,835	262	1,188	4 14 7
22·23	,, ,, 1st June ...	27,244	6,817	16,324	703	3	7,523	338	1,188	6 5 4
22·23	,, ,, 8th ,, ...	26,793	6,143	18,903	573	8	6,724	302	1,232	5 7 4
22·23	,, ,, 15th ,, ...	21,602	4,861	14,460	641	10	5,512	246	1,188	4 10 3
22·23	,, ,, 22nd ,, ...	21,120	4,893	19,284	919	6	5,518	248	1,188	4 10 4
	Totals up to date ...	630,362	1,57,676	4,63,676	19,122	189	1,76,987	332	29,700	5 15 4

DELHI-UMBALLA-KALKA RAILWAY.

Approximate Return of Traffic for week ended 21st June 1902 on 162·24 miles open.

	Coaching Traffic.		Merchandise and Mineral Traffic.		Other earnings (estimated).	Total earnings.	Traffic Train-miles run.		
	No. of passengers.	Coaching receipts.	Weight carried.	Receipts.			Coaching.	Merchandise.	Total.
		Rs. A. P.	Mds. S.	£ Rs. A. P.	Rs. A. P.	Rs. A. P.			
Total traffic for the week ...	23 040	18,511 1 0	1,15,491 30	13,854 5 0	56 0 0	32,421 6 0	8,569	4,157	12,726
Or per mile of railway ...	...	114 1 6	.. ..	85 0 4	0 5 6	199 13 4	.....	.....	.....
For previous 23½ weeks of half-year	512,031*	4,44,610 11 0*	31,89,194 0†	3,01,206 3 0†	1,514 0 0‡	7,47,420 14 0	190,409§	107,808§	307,2[illegible]
Total for 24½ weeks ...	535,071	4,63,121 12 0	33,04,675 30	3,15,150 8 0	1,570 0 0	7,79,842 4 0	207,978	111,965	319,943
Comparison.									
Total for corresponding week of previous year.	22,773½	17,155 14 1	1,69,363 0	19,867 5 0	36 0 9	37,059 3 10	8,031	3,910	11,941
Per mile of railway corresponding week of previous year.	.....	105 11 10	.....	122 7 4	0 3 7	228 6 9	.....	.....	.....
Total for corresponding 24½ weeks of previous year.	482,063½	4,30,114 12 2	33,78,797 0	3,60,021 4 6	1,640 2 9	7,91,776 3 5	209,027½	95,368§	304,396

* Added No. of passengers 838 and Rs. 809
† Deducted Mds. 33,993 and Rs. 825
‡ Ditto " 17
} On account of difference between the approximate and audited figures for the week ended 17th May 1902.
§ Audited figures up to 17th May 1902.

1902. *Abstract of progressive weekly returns of all earnings for 1902 in comparison with 1901.*

Open mileage.	Period.	Coaching Traffic.		Merchandise and Mineral Traffic.		Other earnings.	Total.	Per mile of railway.	Train mileage.	
		No. of passengers.	Rs.	Mds.	Rs.	Rs.	Rs.	Rs.	No.	Rate. Rs. A. P.
* 162·24	11 days of Jan. ...	25,067	20,571	1,55,401	18,783	66	39,420	243	12,247	3 3 7
* 162·24	Week ended 18th " ...	16,445	11,690	1,01,583	10,895	65	22,650	140	12,074	1 14 0
* 162·24	" " 25th " ...	18,825	13,955	2,77,622	16,113	48	30,116	186	12,590	2 6 3
* 162·24	" " 1st Feb. ..	19,333	16,696	1,13,114	11,007	70	27,763	171	12,313	2 4 1
* 162·24	" " 8th " ...	18,762	16,526	87,205	10,927	69	27,522	170	12,203	2 4 1
* 162·24	" " 15th " ...	19,477	15,891	2,82,758	15,004	61	30,956	191	12,612	2 7 3
* 162·24	" " 22nd " ...	21,267	17,153	1,93,081	16,088	94	33,333	205	11,997	2 12 5
* 162·24	" " 1st March ...	22,775	18,083	1,71,585	14,391	77	33,151	204	11,751	2 13 2
* 162·24	" " 8th " ...	23,825	19,525	94,365	11,710	95	31,330	193	12,504	2 8 1
* 162·24	" " 15th " ...	22,945	23,093	1,35,608	11,414	83	34,589	214	13,139	2 10 2
* 162·24	" " 22nd " ...	21,916	21,852	1,25,823	15,379	66	37,297	230	14,668	2 8 8
* 162·24	" " 29th " ..	22,083	24,283	1,44,747	16,558	45	40,886	252	15,127	2 11 3
* 162·24	" " 5th April ..	25,317	25,509	2,30,615	12,978	90	38,577	238	14,142	2 11 8
* 162·24	" " 12th " ...	21,024	21,051	1,10,624	12,766	83	33,900	209	13,086	2 7 8
* 162·24	" " 19th " ...	20,155	19,142	1,13,127	11,866	51	31,059	191	13,606	2 4 6
* 162·24	" " 26th " ...	24,072	22,822	1,16,616	13,960	44	36,826	227	14,417	2 8 10
* 162·24	" " 3rd May ...	22,247	21,093	1,12,040	9,385	61	30,539	188	14,034	2 3 10
* 162·24	" " 10th " .	23,153	19,317	89,960	12,425	59	31,801	196	14,490	2 3 1
* 162·24	" " 17th " ...	24,040	20,057	92,624	12,352	51	32,460	200	13,592	2 6 3
162·24	" " 24th "	23,389	18,780	1,29,406	13,467	64	32,311	199	12,189	2 10 5
162·24	" " 31st " ...	25,307	17,360	1,21,323	10,984	63	28,407	175	12,691	2 3 10
162·24	" " 7th June ...	23,873	19,544	1,03,726	12,434	56	32,034	197	12,247	2 9 10
162·24	" " 14th " ...	24,684	20,058	85,541	10,110	56	30,224	188	12,805	2 6 2
162·24	" " 21st " .	23,040	18,511	1,15,492	13,854	56	32,421	200	12,726	2 8 9
	Totals up to date ...	535,071	4,63,122	33,04,676	3,15,150	1,570	7,79,842	196	319,943	2 7 0

* Audited figures.

Abstract of progressive weekly returns of all earnings for 1902 in comparison with 1901—concluded. *1901.*

		No. of passengers.	Rs.	Mds.	Rs.	Rs.	Rs.	Rs.	No.	Rate. Rs. A. P.
162·24	12 days of Jan. ...	20,766	22,477	1,25,266	16,296	65	38,838	239	20,837	1 13 10
162·24	Week ended 19th " ...	15,707	13,931	1,78,597	11,864	41	25,836	159	12,943	2 0 9
162·24	" " 26th " ...	16,332	13,878	1,40,538	11,559	62	25,499	157	12,142	2 1 8
162·24	" " 2nd Feb. ..	16,321	14,083	1,57,744	11,308	71	25,522	157	12,238	2 1 4
162·24	" " 9th " ...	18,754	15,095	83,151	10,131	71	25,297	156	12,167	2 1 3
162·24	" " 16th " ...	19,741	17,279	1,48,093	10,573	73	27,925	172	11,700	2 6 2
162·24	" " 23rd " ..	19,823	18,290	1,26,868	10,975	75	29,340	181	12,295	2 6 2
162·24	" " 2nd March ...	19,304	16,230	1,44,528	13,161	93	29,484	182	11,953	2 7 6
162·24	" " 9th " ...	18,307	16,404	1,05,167	11,901	62	28,367	175	12,102	2 5 6
162·24	" " 16th " ...	23,701	22,244	1,00,333	13,540	104	35,888	221	11,790	3 0 8
162·24	" " 23rd " ...	24,606	23,021	1,17,448	15,601	107	37,729	233	12,518	3 0 3
162·24	" " 30th " ...	21,564	22,171	1,63,513	19,755	68	41,993	259	13,390	3 2 2
162·24	" " 6th April ...	21,385	21,904	1,83,593	18,549	104	40,557	250	13,864	2 14 10
162·24	" " 13th " ...	20,845	19,063	1,41,007	15,785	73	34,920	215	12,958	2 11 1
162·24	" " 20th " ...	17,644	13,547	1,27,665	12,027	54	30,628	189	12,558	2 7 0
162·24	" " 27th " ...	14,557	10,678	1,09,725	14,324	57	31,059	191	12,161	2 8 10
162·24	" " 4th May ...	17,652	17,358	2,15,145	14,180	51	31,589	195	11,980	2 10 2
162·24	" " 11th " ..	17,473	15,994	1,41,080	16,959	60	33,013	203	11,058	2 13 2
162·24	" " 18th " ...	18,463	18,406	1,05,023	13,809	47	35,262	217	11,667	3 0 4
162·24	" " 25th " ..	20,016	16,851	1,33,131	20,842	73	37,766	233	12,120	3 1 10
162·24	" " 1st June ...	22,520	15,707	1,86,402	18,413	60	34,240	211	12,901	2 10 6
162·24	" " 8th " ...	22,535	20,107	1,41,187	18,032	46	39,087	241	12,445	3 2 5
162·24	" " 15th " .	23,289	18,173	1,33,638	16,000	67	34,840	215	11,778	2 15 4
162·24	" " 22nd " ...	22,774	17,156	1,09,363	19,867	36	37,059	228	11,941	3 1 8
	Totals up to date ...	482,064	4,30,115	33,78,797	3,60,021	1,640	7,91,776	197	304,396	2 9 7

SOUTH BEHAR RAILWAY.

Approximate Return of Traffic for week ended 21st June 1902 on 78·76 miles open.

	Coaching Traffic.		Merchandise and Mineral Traffic.		Other earnings (estimated).	Total earnings.	Traffic Train-miles run		
	No. of passengers.	Coaching receipts.	Weight carried.	Receipts.			Coaching.	Merchandise.	Total
		Rs. A. P.	Mds. s.	Rs. A. P.	Rs. A. P.	Rs. A. P.			
Total traffic for the week ..	16,576	7,349 8 0	32,882 10	2,522 2 0	22 0 0	9,893 10 0	1,801	1,176	2,97
Or per mile of railway	.....	93 5 1	...	32 0 4	0 4 6	125 9 11	.....	.....	.....
For previous 23½ weeks of half-year	326,201*	1,67,979 15 0*	11,43,908 0†	79,340 8 0†	496 0 0‡	2,47,816 7 0	46,497§	23,043§	69,54
Total for 24½ weeks .	342,777	1,75,329 7 0	11,76,790 10	81,863 10 0	518 0 0	2,57,710 1 0	48,298	24,213	72,61
COMPARISON.									
Total for corresponding week of previous year .	14,309	6,815 0 5	45,303 30	3,757 11 0	20 12 9	10,599 8 2	2,066	1,221½	3,80
Per mile of railway corresponding week of previous year ...	.....	86 8 0	.....	47 11 4	0 5 5	134 0 3	.....	...	.....
Total for corresponding 24½ weeks of previous year ...	329,340§	1,61,775 13 2	12,67,276 0	86,117 8 0	839 10 9	2,48,731 15 11	49,880	31,378½	81,26

* Added number of passengers 551 and Rs. 112 } On account of difference between the approximate and audited figures for the week ended
† Deducted Mds. 697 and ,, 154 } 17th May 1902.
‡ Deducted ,, 3
§ Audited figures up to 17th May 1902.

1902. *Abstract of progressive weekly returns of all earnings for 1902 in comparison with 1901.*

Open mileage.	Period.	Coaching Traffic.		Merchandise and Mineral Traffic.		Other earnings.	Total.	Per mile of railway.	Train mileage.	
		No. of passengers.	Rs.	Mds.	Rs.	Rs.	Rs.	Rs.	No.	Rate. Rs. A. P.
*78·76	11 days of Jan. ...	19,440	10,417	55,727	3,647	20	14,084	179	4,567	3 1 4
*78·76	Week ended 18th ,, ...	11,359	5,438	35,388	2,697	19	8,154	104	2,835	2 14 0
*78·76	,, ,, 25th ,, ...	13,043	6,982	35,925	2,865	33	9,880	125	2,835	3 7 9
*78·76	,, ,, 1st Feb. ...	12,345	6,248	33,970	2,178	9	8,435	107	3,150	2 10 10
*78·76	,, ,, 8th ,, ...	13,181	6,716	32,169	2,230	14	8,950	114	3,071	2 14 8
*78·76	,, ,, 15th ,, ...	12,218	6,804	30,604	2,133	16	8,953	114	2,835	3 3 6
*78·76	,, ,, 22nd ,, ...	14,725	8,159	33,766	2,476	21	10,656	135	2,993	3 9 0
*78·76	,, ,, 1st March ...	15,053	9,408	37,721	2,219	21	11,648	148	2,835	4 1 9
*78·76	,, ,, 8th ,, ...	14,492	8,578	50,922	3,579	26	12,183	155	2,678	4 8 9
*78·76	,, ,, 15th ,, ...	14,340	8,140	62,926	5,236	22	13,398	170	2,993	4 7 7
*78·76	,, ,, 22nd ,, ...	16,128	9,619	55,914	4,328	17	13,964	177	2,993	4 10 8
*78·76	,, ,, 29th ,, ...	13,451	8,179	52,316	4,037	26	12,242	155	3,071	3 15 9
*78·76	,, ,, 5th April ...	13,590	8,293	71,005	5,026	32	13,341	169	2,993	4 7 4
*78·76	,, ,, 12th ,, ...	15,185	7,531	62,610	4,620	23	12,174	155	2,835	4 4 8
*78·76	,, ,, 19th ,, ...	15,786	7,075	46,931	3,836	15	10,926	139	2,814	3 12 0
*78·76	,, ,, 26th ,, ...	12,271	5,737	85,983	4,012	22	9,771	124	3,071	3 2 11
*78·76	,, ,, 3rd May ...	12,705	5,760	55,762	4,105	29	9,894	126	3,150	3 2 3
*78·76	,, ,, 10th ,, ...	14,402	6,856	48,096	3,623	18	9,997	127	2,993	3 5 5
*78·76	,, ,, 17th ,, ...	14,037	6,084	50,037	3,448	22	9,554	121	2,993	3 3 1
78·76	,, ,, 24th ,, ...	14,077	6,803	47,530	3,392	24	10,219	130	2,835	3 9 8
78·76	,, ,, 31st ,, ...	13,794	6,119	57,641	3,610	23	9,752	124	2,993	3 4 2
78·76	,, ,, 7th June ...	13,775	6,989	48,940	3,134	22	10,145	129	2,835	3 9 3
78·76	,, ,, 14th ,, ...	13,634	6,555	51,886	2,929	22	9,506	121	3,072	3 1 6
78·76	,, ,, 21st ,, ...	16,576	7,349	32,882	2,525	23	9,894	126	3,071	3 3 7
	Totals up to date ...	342,777	1,75,329	11,76,790	81,863	518	2,57,710	133	72,611	3 6 9

* Audited figures.

Abstract of progressive weekly returns of all earnings for 1902 in comparison with 1901—concluded. *1901.*

		No. of passengers.	Rs.	Mds.	Rs.	Rs.	Rs.	Rs.	No.	Rate. Rs. A. P.
78·76	12 days of Jan. ...	18,079	8,256	69,743	4,259	47	12,562	160	5,580	2 4 0
78·76	Week ended 19th ,, ...	11,073	5,045	49,632	3,026	20	8,091	103	3,228	2 8 1
78·76	,, ,, 26th ,, ...	13,676	6,005	46,172	2,802	41	8,998	144	3,150	2 13 8
78·76	,, ,, 2nd Feb. ...	14,872	7,292	48,810	2,789	23	10,104	128	3,229	3 2 1
78·76	,, ,, 9th ,, ...	14,755	8,170	45,089	2,641	63	10,874	138	3,308	3 4 7
78·76	,, ,, 16th ,, ...	15,629	8,451	51,727	3,670	59	12,180	155	3,228	3 13 4
78·76	,, ,, 23rd ,, ...	15,705	8,235	63,645	4,120	36	12,391	157	3,380	3 10 6
78·76	,, ,, 2nd March ...	16,528	7,947	54,799	3,240	46	11,233	143	2,835	3 15 5
78·76	,, ,, 9th ,, ...	14,406	7,522	40,820	2,609	46	10,237	130	3,308	3 1 6
78·76	,, ,, 16th ,, ...	15,781	8,770	48,067	3,702	50	12,522	159	3,229	3 14 1
78·76	,, ,, 23rd ,, ...	13,829	8,173	65,998	4,002	51	12,826	163	3,465	3 11 3
78·76	,, ,, 30th ,, ...	12,723	6,459	59,729	4,634	31	11,124	141	3,307	3 5 10
78·76	,, ,, 6th April ...	11,701	5,804	52,237	3,541	41	9,386	119	3,308	2 13 5
78·76	,, ,, 13th ,, ...	13,588	6,177	47,302	2,953	33	9,163	116	3,307	2 12 4
78·76	,, ,, 20th ,, ...	11,989	5,383	43,064	3,181	39	8,583	100	3,308	2 9 6
78·76	,, ,, 27th ,, ...	11,128	5,224	50,706	3,597	38	8,840	112	3,307	2 10 10
78·76	,, ,, 4th May ...	9,572	4,161	48,733	3,476	27	7,664	97	3,308	2 5 1
78·76	,, ,, 11th ,, ...	12,575	6,349	56,998	4,304	17	10,670	134	3,307	3 3 1
78·76	,, ,, 18th ,, ...	11,917	5,678	71,608	4,929	21	10,628	135	3,308	3 3 5
78·76	,, ,, 25th ,, ...	13,442	6,274	67,254	4,558	23	10,855	138	3,544	3 1 0
78·76	,, ,, 1st June ...	12,782	5,562	55,972	3,667	28	9,257	116	3,386	2 11 8
78·76	,, ,, 8th ,, ...	15,172	6,947	52,815	3,619	23	10,489	133	3,307	3 2 9
78·76	,, ,, 15th ,, ...	14,971	7,117	29,569	2,520	19	9,656	123	3,308	2 14 8
78·76	,, ,, 22nd ,, ...	14,309	6,815	45,303	3,758	27	10,600	135	3,307	3 3 3
	Totals up to date ...	320,241	1,61,776	12,67,276	86,117	839	2,48,732	128	81,264	3 1 0

BENGAL CENTRAL RAILWAY COMPANY, LIMITED.

Approximate Return of Traffic and Mileage for the week ended 21st June 1902 on 139 miles open.

	Coaching Traffic.		Merchandise and Mineral Traffic.		Other earnings.	Total earnings.	Traffic Train-miles run.		
	Number of passengers.	Coaching receipts.	Weight carried.	Receipts.			Coaching.	Merchandise.	Total.
		Rs. A. P.	Mds. s.	Rs. A. P.	Rs. A. P.	Rs. A. P.			
Total traffic for the week ...	39,150	19,337 0 0	41,639 0	3,176 0 0	40 0 0	22,562 0 0	3,354	2,637	5,991
Or per mile of railway	301	149 0 0†	299 0	23 0 0	.....	172 0 0	.....	.....	.....
For previous 24 weeks of half-year*	866,701	3,46,093 0 0	14,49,058 0	1,14,155 0 0	90,509 0 0	5,50,757 0 0	82,501	59,180	141,681
Total for 25 weeks ...	905,851	3,65,430 0 0	14,00,697 0	1,17,331 0 0	90,558 0 0	5,73,319 0 0	85,855	61,817	147,672
Comparison.									
Total for corresponding week of previous year ...	34,778	14,284 0 0	50,936 0	5,858 0 0	308 0 0	20,450 0 0	3,639	2,271	5,910
Per mile of railway corresponding week of previous year ..	263	110 0 0	386 0	42 0 0	2 0 0	154 0 0	.....	.....	.....
Total to corresponding date of previous year	922,560	3,70,515 0 0	14,30,447 0	1,06,580 0 0	1,23,594 0 0	6,00,689 0 0	102,736	55,209	157,945

* Audited up to week ending 26th April 1902.
† Coaching traffic calculated on 130 miles only.

ASSAM-BENGAL RAILWAY.

Approximate Return of Traffic for the week ended 21st June 1902 on 558 miles open for all descriptions of traffic and an additional 31 miles for goods and parcels traffic only.

	Coaching Traffic.		Merchandise and Mineral Traffic.		Other earnings.	Total earnings.	Traffic Train-miles run.		
	No. of passengers.	Coaching receipts.	Weight carried.	Receipts.			Coaching.	Merchandise.	Total.
		Rs. A. P.	Mds. s.	Rs. A. P.	Rs. A. P.	Rs. A. P.			
Total traffic for the week ...	30,289	18,422 0 0	1,06,210 0	14,564 0 0	932 0 0	33,918 0 0	7,031	5,988	13,019
Or per mile of railway	54·28	33 01	190·33	24·73	1·58	59·32	12·60	10·17	22·77
For previous 24 weeks of half-year	891,855	5,61,861 0 0	25,09,413 0	2,97,355 0 0	33,314 0 0	8,92,530 0 0	160,695	137,295	297,990
Total for 25 weeks ...	922,144	5,80,283 0 0	26,15,623 0	3,11,919 0 0	34,246 0 0	9,26,448 0 0	167,690	143,283	310,979
Comparison.									
Total for corresponding week of previous year	31,589	19,934 0 0	1,34,454 0	18,440 0 0	1 921 0 0	40,215 0 0	6,035	7,644	13,709
Per mile of railway corresponding week of previous year	56·61	35·76	232·62	31·90	3·15	70·81	10·87	13·22	24·09
Total to corresponding date of previous year n.	917,160	6,05,034 0 0	29,46,951 0	3,91,810 0 0	72,456 0 0	10,69,306 0 0	126,985	173,184	300,169

FINANCIAL YEAR.

Approximate Statement of Gross Receipts of the Assam-Bengal Railway.

Receipts for the week ending 21st June 1902.			Receipts for the week ending 22nd June 1901.			Total receipts from 1st April 1902 to 21st June 1902.			Total receipts from 1st April 1901 to 22nd June 1901.			Total increase in 1902.	Total decrease in 1902.
Mean mileage worked.	Receipts.	Per mile worked.	Mean mileage worked.	Receipts.	Per mile worked.	Mean mileage worked.	Total receipts.	Per mile worked per week.	Mean mileage worked.	Total receipts.	Per mile worked per week.		
	Rs.	Rs.		Rs.	Rs.		Rs.			Rs.		Rs.	Rs.
589	33,918	59·32	578	40,215	70·81	589	3,93,740	...	578	5,01,022	...	.....	1,02,282

SEGOWLIE-RAKSAUL BRANCH RAILWAY.

(WORKED BY THE B. & N.-W. RAILWAY.)

Audited Return of Traffic for week ending 10th May 1902 on 18 miles open.

	Coaching Traffic.		Merchandise and Mineral Traffic.		Other earnings.	Total earnings.	Traffic Train-miles run.		
	Passengers carried.	Receipts.	Weight carried.	Receipts.			Coaching.	Merchandise.	Total.
	No.	Rs. A. P.	Mds.	Rs. A. P.	Rs. A. P.	Rs. A. P.			
Total traffic for the week on 18 miles open	2,744	470 14 0	10,789	649 15 2	10 8 0	1,140 5 2	372	132	504
Or per mile of railway	152·44	26 10 6	599·33	36 1 9	0 9 4	63 5 7	.....	.....	.....
For previous 17½ weeks of half-year	46,724	8,111 7 0	2,05,649	5,303 4 5	779 2 0	14,193 13 5	6,643	2,249	8,892
Total for 18½ weeks ...	49,468	8,591 5 0	2,16,437	5,953 3 7	789 10 0	15,334 2 7	7,015	2,381	9,396
COMPARISON.									
Total for corresponding week of previous year on 18 miles open	2,268	346 10 9	13,866	260 13 4	10 1 0	617 9 1	378	126	504
Per mile of railway corresponding week of previous year ...	126 00	19 4 2	770·33	14 7 10	0 8 11	34 4 11	.....	.....	.....
Total to corresponding date of previous year	38,434	6,490 3 0	2,33,257	6,894 1 0	625 13 0	14,010 1 0	6,795	2,178	8,973

Printed at the Printing Office, and published by the Book Depôt, of the Bengal Secretariat, Writers' Buildings, in the City of Calcutta, on 9th July 1902.

REGISTERED No. C 209.]

No. 29 of 1902.

The Calcutta Gazette.

WEDNESDAY, JULY 16, 1902.

CONTENTS.

	Page
PART I.—Orders and Notifications by the Lieutenant-Governor of Bengal, the High Court, Government Treasury, &c.	999—1022
PART IA.—Orders and Notifications by the Government of India	117—121
PART IB.—Orders by the Lieutenant-Governor of Bengal	139—142
PART II.—Advertisements	881—898
PART III.—Acts of the Bengal Council	*Nil*
PART IV.—Bills of the Bengal Council	*Nil*
PART IVA.—Proceedings of the Bengal Legislative Council	*Nil*
PART V.—Acts of the Governor-General's Council assented to by the Governor-General	*Nil*
PART VI.—Bills introduced into the Council of the Governor-General for making Laws and Regulations or published under Rule 23	*Nil*
APPENDIX.—Marine Notifications	265—276
SUPPLEMENT No. 29:—	
Statistical Return of Crops, Meteorology, Rainfall, Irrigation Operation and Irrigation Operation of Fasl Rabi for the year 1901-1902, Circular and Eastern Canal, Results of Meteorological Observations, Railway Traffic Receipts, &c., &c.	1011—1037

PART I

Orders and Notifications by the Lieutenant-Governor of Bengal, the High Court, Government Treasury, &c.

ORDERS BY THE LIEUT.-GOVERNOR OF BENGAL.

TOUR OF HIS HONOUR THE LIEUTENANT-GOVERNOR OF BENGAL DURING JULY AND AUGUST 1902.

Miles. (by rail).	Day of the— Week.	Day of the— Month.	Place.		Time (Railway time).	Remarks.
	Saturday	July 19th	Darjeeling ...	dep.	13-25	By special train. Tea at Kurseong at 15-42.
51	.....	.....	Siliguri ...	arr.	19-45	Dinner. Change to Eastern Bengal State Railway.
				dep.	21-15	By special train.
	Sunday ...	July 20th	Sara Ghat ...	arr.	5-30	
				dep.	7-30	By special steamer.
208	.....	.....	Damukdia Ghat.	arr.	8-5	
				dep.	8-30	By special train. Breakfast in train.
64	.....	.....	Goalundo ..	arr.	11-0	Embark on *Rhotas*.
				dep.	12-0	After arrival of Calcutta mail at 11-30.
					19-0	Anchor below Narainganj.

Miles (by rail).	Day of the— Week.	Month.	Place.	Time (Railway time).	Remarks.
	Monday	July 21st	Dacca ... arr.	11-30	Land at Ahsan Munzil, where His Honour will reside. Public arrival.
	Tuesday	„ 22nd	Halt.		
	Wednesday	„ 23rd			
	Thursday	„ 24th	Dacca ... dep.	0-55	By Mail train. Private departure.
75	.....	.....	Mymensingh arr.	6-18	Leave the train at 7-30 A.M. local time. Public arrival.
			dep.	23-0	By special train. Private departure.
75	Friday	July 25th	Dacca ... arr.	5-0	Leave the train early and embark on *Rhotas*, which will leave at once. Private departure. Anchor in Dhullasory river.
	Saturday	„ 26th	*En route* ...	...	Call at Goalundo for mails about 10 A.M. Anchor below Kushtea.
	Sunday	„ 27th		...	Call at Kushtea early for mails and at Sara Ghat about 11 A.M. Anchor below Rampur Boalia.
	Monday	„ 28th	.....	...	Anchor at Godagiri.
	Tuesday	„ 29th	Malda ... arr.	19-0	Private arrival.
	Wednesday	„ 30th	Halt ...	...	Visit Pandua.
	Thursday	„ 31st			Visit Gaur.
	Friday	Aug. 1st			
	Saturday	„ 2nd	Malda ... dep.	5-30	Anchor at night off mouth of Bhagirathi river.
	Sunday	„ 3rd	Azimganj ... arr.	16-0	Private arrival.
	Monday	„ 4th	.....	...	Drive to Berhampur and rejoin *Rhotas*.
	Tuesday	„ 5th	Halt.		
	Wednesday	„ 6th	Berhampur... dep.	5-30	Anchor off Krishnagar at night.
	Thursday	„ 7th	Halt.		
	Friday	„ 8th	Krishnagar dep.	5-30	
			Calcutta ... arr.	...	Land at Takta Ghat some time during the afternoon. Arrival private.
473					

NOTE.—The party accompanying His Honour will be—

Throughout the tour:
- Lady Woodburn ... ...
- Miss Woodburn ... ...
- The Hon'ble Mr. C. E. Buckland, C.I.E., Chief Secretary to Government.
- Major Strachey, Private Secretary ...
- Captain Bignell, Aide-de Camp ...
- Mrs. Lord, Housekeeper ...
- An English maid ... ...
- Three clerks, Private Secretary's Office ...
- About 20 servants ... ...
- The Postmaster, Lieutenant-Governor's Camp Post Office.

Mr. D. B. Horn, Secretary to Government, Public Works Department ... From Godagiri to Berhampur.

The Hon'ble Mr Bourdillon, C.S.I., Member of the Board of Revenue, and Mrs. Bourdillon ... ... At Malda.

Captain Anderson, I.M.S., and a Hospital Assistant ... ... From Goalundo to Calcutta.

The usual salute will be fired on His Honour's arrival at Calcutta.

DARJEELING,
The 6th July 1902.

J. STRACHEY, MAJOR,
Private Secy. to the Lieut.-Govr. of Bengal.

No. 3049A.

APPOINTMENTS AND TRANSFERS.

GENERAL.—*No. 1928A.D.—The 12th July 1902.*—Mr. R. R. Pope, Officiating Judicial Commissioner of Chota Nagpur, is confirmed in that appointment.

Chota Nagpur.

No. 1930A.D.—The 12th July 1902.—Mr. C. Fisher, Officiating District and Sessions Judge, Dinajpur, is confirmed in that appointment, *vice* Mr. R. R. Pope.

Dinajpur.

POLICE.—*No. 1939A.D.—The 12th July 1902.*—Mr. R. S. F. Macrae, Officiating District Superintendent of Police, Palamau, is transferred to Noakhali.

Palamau. Noakhali.

No. 1941A.D.—The 12th July 1902.—Mr. T. C. Simpson, Officiating District Superintendent of Police, Khulna, is transferred to Backergunge.

Khulna. Backergunge.

No. 1943A.D.—The 12th July 1902.—Mr. C. E. Briscoe, District Superintendent of Police, Backergunge, is transferred to Palamau.

Backergunge. Palamau.

PROMOTION.

POLICE.—*No. 2088A.D.—The 14th July 1902.*—Mr. H. A. S. Burt, Officiating Assistant Superintendent of Police of the first grade, is confirmed in that grade, with effect from the 11th May 1902, *vice* Mr. J. Samuels, retired.

LEAVE.

GENERAL.—*No. 1872A.D.—The 9th July 1902.*—Mr. F. W. Ward, Officiating Joint-Magistrate and Deputy Collector, Kurseong, Darjeeling, was on special leave, under article 348 of the Civil Service Regulations, from the afternoon of the 1st May to the afternoon of the 23rd June 1902.

Darjeeling.

No. 1925A.D.—The 12th July 1902.—Maulvi Syed Mohamed Abul Hayat, substantive *pro tempore* Deputy Magistrate and Deputy Collector, Hooghly, is allowed leave for three days, under article 273 (*a*) of the Civil Service Regulations, in extension of the leave granted to him under the order of the 4th April 1902.

Hooghly.

No. 1959A.D.—The 12th July 1902.—Mr. Samuel Chandra, Deputy Magistrate and Deputy Collector, Singhbhum, is allowed leave for fifteen days, under article 291 of the Civil Service Regulations, in extension of the leave granted to him under the order of the 10th June 1902.

Singhbhum.

No. 2085A D.—The 14th July 1902.—Mr. J. R. Blackwood, Deputy Chairman of the Corporation of Calcutta, is allowed leave for three months, under article 291 of the Civil Service Regulations, with effect from the afternoon of the 7th August 1902.

Calcutta.

VOLUNTEERS.—*No. 1861A.D.—The 8th July 1902.*—Captain W. F. Harnett, Eastern Bengal State Railway Volunteer Rifles, has been granted, by the General Officer Commanding the Presidency District, leave of absence for three months, in extension of the leave granted to him and notified in the order of the 18th January 1902.

No. 1961A.D.—The 14th July 1902.—Captain and Paymaster T. C. Deverell, Calcutta Port Defence Volunteers, has been granted, by the General Officer Commanding the Presidency District, leave of absence for four months, with effect from the 10th July 1902.

POLICE.—*No. 2122A.D.—The 15th July 1902.*—Maulvi Jannat Hosain Khan, Khan Bahadur, District Superintendent of Police, Balasore, is allowed leave for three weeks, under article 291 of the Civil Service Regulations, with effect from the date on which he may avail himself of it.

Balasore.

No. 3047A.—The 15th July 1902.—Mr. J. V. Ryan, Officiating District Superintendent of Police, Jalpaiguri, is allowed combined leave for two years, viz., privilege leave for three months under article 264A of the Civil Service Regulations, and furlough for the remaining period under article 340 (*b*) of the Regulations, with effect from the date on which he may avail himself of it.

Jalpaiguri.

EDUCATION.—*No. 1945A.D.—The 12th July 1902.*—Babu Radha Kisor Chakravarti, Officiating Assistant Inspector of Schools, Dacca Division, is allowed leave for one month, under articles 291 and 377 of the Civil Service Regulations, with effect from the 3rd June 1902, or any subsequent date on which he availed himself of it.

Dacca Division.

POWERS.

GENERAL.—*No. 1933A.D.—The 12th July 1902.*—Mr. W. D. R. Prentice, Assistant Magistrate and Collector, Dinapore, Patna, is vested with the powers of a Deputy Collector.

Patna.

No. 1936A.D.—The 12th July 1902.—The following officers are vested with the powers of a Deputy Collector:—

Champaran.	Mr. J. C. Leighton, Assistant Magistrate and Collector, Champaran.
Muzaffarpur	Mr. G. Milne, Assistant Magistrate and Collector, Muzaffarpur.
Bhagalpur.	Mr. F. M. Luce, Assistant Magistrate and Collector, Bhagalpur.
Darbhanga.	Mr. J. A. L. Swan, Assistant Magistrate and Collector, Darbhanga.

No. 2090A.D.—The 14th July 1902.—Babu Basanta Krishna Bose, Deputy Collector, Monghyr. Monghyr, is vested with the powers of a Collector, under Act I of 1894, in that district.

The following orders are republished from the *Assam Gazette*:—

No. 5124G.—The 30th June 1902.—Mr. A. Porteous, C.I.E., I.C.S., Officiating Judge and Commissioner of the Assam Valley Districts, is granted privilege leave for three months, combined with furlough for eighteen months, under articles 264A and 340 of the Civil Service Regulations, with effect from the date on which he may be relieved.

No. 5125G.—The 30th June 1902.—Mr. J. C. Arbuthnott, C.I.E., I.C.S, Deputy Commissioner, Sibsagar, is appointed to officiate as Judge and Commissioner of the Assam Valley Districts, pending the arrival of Mr. P. G. Melitus, C.I.E., I.C.S., or until further orders, with effect from the date of taking over charge from Mr. A. Porteous, I.C.S.

No. 5126G.—The 30th June 1902.—Mr. L. O. Clarke, I.C.S., Assistant Commissioner, Jorhat, on return from leave, is appointed to officiate as Deputy Commissioner, Sibsagar, during the absence of Mr. J. C. Arbuthnott, C.I.E, I.C.S., or until further orders, with effect from the date of taking over charge.

No. 2986J.—The 1st July 1902.—Under the provisions of section 25 of Act XII of 1887 (The Civil Courts Act), the Chief Commissioner confers temporarily upon Babu Nalini Kanta Bose, sub. *pro tem.* Munsif of Sylhet, the jurisdiction of a Judge of a Court of Small Causes for the trial of suits cognizable by such a Court up to the value of Rs. 100, within the limits of the Sadar Munsifi of Sylhet, during the absence, on deputation, of Babu Khetter Nath Datta.

C. E. BUCKLAND,
Chief Secy. to the Govt. of Bengal.

NOTIFICATION—No. 1962A.D.

The 14th July 1902.—The following statement shows the number of furloughs which may be allotted to officers of the Indian Civil Service during the second-half of 1902:—

Total number of Indian Civilians serving under the Government of Bengal on the 1st July 1902	214
Twenty per cent. of 214	42·8
Deduct number of officers absent on furlough, other than medical furlough, on the 1st July 1902	30
Deduct number of furlough recently granted	1
Number of furloughs at present available	11·8
Number of furloughs which may be expected to be available by the return of officers before the 1st October 1902	3
Total number of furloughs which may be expected to be available before the 1st October 1902	14·8

C. E. BUCKLAND,
Chief Secy. to the Govt. of Bengal.

REVENUE DEPARTMENT—(FORESTS).

NOTIFICATION—No. 1511T.R.

The 10th July 1902.—Mr. T. I. Pocock, Extra-Assistant Conservator of Forests, attached to the Sunderbans Division, is granted privilege leave for two months and five days under articles 277 and 291 of the Civil Service Regulations, with effect from the 16th July 1902, or from such subsequent date as he may be relieved of his duties.

Sunderbans.

W. C. MACPHERSON,
Offg. Secy. to the Govt. of Bengal.

REVENUE DEPARTMENT—(OPIUM).

NOTIFICATION—No. 1587T.R.

The 14th July 1902.—Mr. G. W. D. Dick-Lauder, Sub-Deputy Opium Agent, Gonda, is granted privilege leave for two months and twenty-eight days, under article 291 of the Civil Service Regulations, with effect from the 24th July 1902, or any subsequent date on which he may avail himself of it.

Gonda.
Bahraich.

Mr. W. B. Talbot, Assistant Opium Agent, Bahraich, is appointed to perform the duties of Sub-Deputy Opium Agent, Gonda, during the absence, on leave, of Mr. G. W. D. Dick-Lauder, or until further orders.

W. C. MACPHERSON,
Offg. Secy. to the Govt. of Bengal.

REVENUE DEPARTMENT—(LAND REVENUE).

NOTIFICATION—No. 1549T.R.

The 11th July 1902.—Mr. G. J. Monahan, Assistant Settlement Officer, in charge Monghyr, is allowed combined leave for six months, viz., privilege leave for eighteen days under article 264A of the Civil Service Regulations, with effect from the afternoon of the 21st May 1902, and furlough for the remaining period under article 340 (*a*) of the Regulations.

Monghyr.

W. C. MACPHERSON,
Offg. Secy. to the Govt. of Bengal.

NOTIFICATION—No. 1589T.R.

The 14th July 1902.—Whereas a survey and the preparation of a record of rights are calculated to settle serious disputes existing between the landlord and tenants of villages Akua and Shehora, appertaining to estate No. 8, in the district of Mymensingh:

Mymensingh.

In exercise of the powers conferred upon him by section 101 (2) (*b*) of the Bengal Tenancy Act, VIII of 1885, as amended by Act III (B.C.) of 1898, the Lieutenant-Governor of Bengal is pleased to direct that a survey shall be made and a record of rights prepared in respect of all lands in villages Akua and Shehora, appertaining to estate No. 8, pargana Alapsingh, in the district of Mymensingh.

The particulars to be recorded in the survey and record of rights shall be the following:—

(*a*) The name of each tenant or occupant.

(*b*) The class to which each tenant belongs, that is to say, whether he is a tenure-holder, raiyat holding at fixed rates, settled raiyat, occupancy raiyat, non-occupancy raiyat or under-raiyat, and if he is a tenure-holder, whether he is a permanent tenure-holder or not, and whether his rent is liable to enhancement during the continuance of his tenure.

(*c*) The situation and quantity and one or more of the boundaries of the land held by each tenant or occupier.

(*d*) The name of each tenant's landlord.

(*e*) The rent payable at the time the record of rights is being prepared.

(*f*) The mode in which that rent has been fixed, whether by contract, by order of a Court or otherwise.

(*g*) If the rent is a gradually increasing rent, the time at which, and the steps by which, it increases.

(*h*) The special conditions and incidents, if any, of the tenancy.

(*i*) If the land is claimed to be held rent-free, whether or not rent is actually paid, and, if not paid, whether or not the occupant is entitled to hold the land without payment of rent, and if so entitled, under what authority.

(*j*) The name of the proprietor, with the character and extent of his interest, and the situation, quantity, and boundaries of the proprietor's private lands as defined in Chapter XI of the Act.

W. C. MACPHERSON,
Offg. Secy. to the Govt. of Bengal.

REVENUE DEPARTMENT—(AGRICULTURE).

NOTIFICATION—No. 1471T.—R.

The 7th July 1902.—It is hereby notified for general information that the Lieutenant-Governor has been pleased to sanction the following revised rules for the admission of students to the Bengal Veterinary College and of animals into the Veterinary Hospital attached to it, in supersession of those published under Notification No. 523T.—R., dated the 14th June 1899 :—

Rules for admission of students to, and regulation of their studies in, the Bengal Veterinary College.

1. The course of study for the diploma of qualification will extend over at least three years. Each year will comprise nine teaching months, and will be divided in accordance with the terms of the Calcutta Medical College.

2. New students are required to join on the 15th April, in order to give them time to settle down and acquire some practical knowledge of the work before the lectures commence on the 1st July.

3. Each candidate for admission as a student is required to produce the following certificates :—

(*a*) of age (no applicant under 16 years of age can be admitted as a student);
(*b*) of physical fitness and of good morals;
(*c*) that he has passed the Entrance examination of the Calcutta University, or has been promoted to the first class of a High School, or has passed the Middle English Scholarship examination.

The College Medical Officer will examine the candidates as to physical fitness.

As the teaching will be in English, a good colloquial knowledge of that language is important, which will be tested by the College staff.

There will be no restrictions as to the caste or nationality of students.

It is desirable that students should on admission be between 18 and 26 years of age.

4. All applications for admission as a student are to be made in writing to the Principal of the Bengal Veterinary College, who will decide on the advisability of admission in all doubtful cases.

5. Government will allot annually not less than 30 stipends each of the monthly value of five rupees.

There will be three classes of stipends—

(*a*) For first-year students, or Class "A," tenable for eleven and-a half months, from 15th April to 31st March following.
(*b*) For second-year students, or Class "B," tenable for twelve months, from 1st April to 31st March following.
(*c*) For third-year students, or Class "C," tenable for twelve months, from 1st April to 31st March following.

6. The stipends will be held conditionally on the good behaviour and satisfactory progress of the holders.

7. The stipends will be awarded by the Principal after such examination or other test of the fitness of the candidates as he may think right to prescribe.

8. The Principal may stop the whole or part of the stipend of any District Board or other student for indifferent progress or misbehaviour, and shall make a note of such occurrences in the student's monthly progress report.

9. Annual examinations will be held in March for the first and second year students, in order to determine their qualification for promotion to Classes "B" and "C." The stipends mentioned in rule 5 (*b*) and (*c*) will be allotted in accordance with the results of the annual examinations.

10. It shall be within the discretion of the Committee of Management to decide how many stipends are to be awarded to each class in any year.

11. A student already in the enjoyment of a stipend or a scholarship shall not be eligible to compete for a Government scholarship.

12. The stipend of a student who fails at a yearly examination shall be stopped altogether, or for such period as the Principal deems desirable.

13. The Principal will report to the Committee as to the desirability of retaining any student who has failed at the annual examination.

14. All students shall be bound to conform to the rules of the College and to attend during the hours of instruction, unless specially granted leave of absence.

15. A student absenting himself without leave from the Practical, Gymnastic, or Riding Class, or from a lecture, will be liable to fine.

16. The students may be divided into batches for attendance during the vacations in order that the work of nursing and dressing the sick may not suffer. The stipend of any student who fails to attend in his turn will be paid to his *locum tenens*.

17. In addition to the Government stipends, the Sheo Baksh Bogla Veterinary Scholarship of Rs. 9-8 per mensem will be available. It was founded by Dr. Kenneth McLeod, late Professor of Surgery at the Calcutta Medical College, in 1892, in recognition of

Raja Sheo Baksh Bogla's liberality in connection with the establishment of the first Veterinary School and Hospital in Bengal, and is subject to the following conditions :—

(1) that the candidate must have passed (*a*) the Entrance Examination of the Calcutta University, or (*b*) Middle English, or (*c*) the Middle Vernacular Scholarship Examination, preference being given to these examinations in the order stated;
(2) that in awarding the scholarship, preference be given to an inhabitant of the district of Jessore;
(3) that in the event of more than one candidate possessing the necessary qualification coming forward, preference be given to the candidate who has attained the largest number of marks in the examination;
(4) that the scholarship be tenable for a period of three years in connection with the Bengal Veterinary College.

18. The Principal will select such candidates as he may consider fit to fill the vacancies in the list of Government stipends and to obtain the Sheo Baksh Bogla Scholarship according to the prescribed conditions. He will report his nominations to the Committee.

19. *Studies.*—The following *will be the curriculum of studies :—*

FIRST YEAR.

ANATOMY (UP TO ARTHROLOGY).

Text-book.—Strangeway's Veterinary Anatomy.

ELEMENTARY PHYSIOLOGY.

Text-book.—Ashley's Physiology.

ELEMENTARY BOTANY.

Text-book.—Bentley's Botany (Primer Series).

ELEMENTARY CHEMISTRY.

Text-book.—Roscoe's Chemistry (Primer Series).

MATERIA MEDICA AND PHARMACY.

Text-book.—Tuson's Veterinary Pharmacopœia and Mill's and Symond's Veterinary Pharmacopœia.

HANDLING OF ANIMALS.

Text-book.—Dhakmarvala's Handling of Domestic Animals.

During this year students shall be practically instructed in nursing and dressing, the handling, casting, and securing of animals, and the names of the various instruments and appliances used in ordinary practice.

SECOND YEAR.

ANATOMY (THE WHOLE, INCLUDING COMPARATIVE ANATOMY).

Text-book.—Strangeway's Veterinary Anatomy.

THEORETICAL EQUINE MEDICINE AND SURGERY.

Text-book.—Adam's Diseases of the Horse.

THEORETICAL BOVINE MEDICINE AND SURGERY.

Text-book.—Steel's Diseases of the Ox, amplified by all information brought up to date in the Agricultural Ledgers, Veterinary Series.

THERAPEUTICS, INCLUDING TOXICOLOGY.

Text-book.—Wallis Hoare's Veterinary Therapeutics.

THEORETICAL PRINCIPLES OF HORSE-SHOEING.

Text-book.—Hunting's Horse-shoeing.

During this year students shall attend hospital practice, receive clinical instruction, be instructed in the uses of the various veterinary instruments and appliances. They should also attend at the Forge and Pharmacy, carry out dissections and perform operations on the dead subject.

THIRD YEAR.

PRACTICAL EQUINE MEDICINE AND SURGERY.

Text-book.—Adam's Diseases of the Horse and Hayes.

PRACTICAL BOVINE MEDICINE AND SURGERY.

Text-book.—Steel's Diseases of the Ox, amplified by all information brought up to date in the Agricultural Ledgers, Veterinary Series.

OPERATIVE SURGERY.

Text-book.—Cadiot's Exercises in Surgery.

HYGIENE, LIMITED TO GENERAL PRINCIPLES AS APPLIED TO INDIA.

Text-book.—Myrick's Stable Management.

OBSTETRICS, INCLUDING THE GENERAL PRINCIPLES OF BREEDING AND REARING.

Text-book.—Steel's Diseases of the Ox.

PEASE'S MANUAL ON BREEDING AND REARING, SOUNDNESS OF HORSES AND AGEING OF DOMESTICATED ANIMALS, INCLUDING THE DETECTION OF LAMENESS.

Text-book.—Moore's Guide to Examination of Horses for soundness.

BROWNE'S PRIMER ON DENTITION.

Veterinary Law, limited to Indian Acts having reference to Animals.

MEAT AND MILK INSPECTION.

Text-book.—Walley's Guide to Meat Inspection.

During this year students will be required to perform the duties of clinical clerks and dressers, to perform operations on dead subjects and afterwards on living animals, and to conduct *post-mortem* examinations. They will be instructed in the manipulation of the various instruments used in preventive inoculation against rinderpest and the various methods of inoculation. They will also be instructed in the diagnosis of glanders by means of mallein.

20. All students are required to go through a course of Equitation and Gymnastics.

21. The examinations to be passed for diplomas are three in number, corresponding to the years of professional study and to the subjects taught during these years. These examinations, which shall be entirely *viva voce*, will be conducted under special regulations by a Board appointed for the purpose by the Government of Bengal.

22. The following are the subjects for the examinations, with the maximum number of marks that will be awarded for each of them :—

First examination at the end of the year's study—

	Marks.
(1) Anatomy up to Arthrology inclusive	100
(2) Elementary Physiology	100
(3) Ditto Chemistry	100
(4) Ditto Botany	100
(5) Materia Medica and Pharmacy	100
(6) Handling of Animals	100
Total ...	600

Second examination for those students who have passed the first examination and have gone through the second-year course of study—

	Marks.
(1) Anatomy, whole, including Comparative Anatomy ...	100
(2) Theoretical Equine Medicine and Surgery ...	100
(3) Theoretical Bovine ditto ditto ...	100
(4) Therapeutics, including Toxicology	100
(5) Theoretical Principles of Horse-shoeing	100
Total ...	500

Final or diploma examination for those students who have passed the second examination and have gone through the third-year course of study :—

	Marks.
(1) Practical Equine Medicine and Surgery	200
(2) Ditto Bovine ditto ditto	200
(3) Operative Surgery	200
(4) Hygiene limited to general principles as applied to India	100
(5) Obstetrics, including the general principles of breeding and rearing	100
(6) Soundness of Horses and Agency of domesticated animals, including the detection of lameness ...	200
(7) Veterinary Law limited to Indian Acts having reference to Animals	100
(8) Meat and Milk Inspection	100
Total ...	1,200

This examination will be of a general nature calculated to test the knowledge acquired by the students during the whole of their three-years' course.

23. In the first and second year class examinations 33 per cent. in each subject with an aggregate of 50 per cent. will be required to ensure a "Pass."

24. In the final Diploma Examinations 33 per cent. in each subject with the exception of Equine and Bovine Medicine and Surgery and Operative Surgery in which 50 per cent. will be required for a "Pass," the aggregate of all subjects being 50 per cent.

25. For admission to any examination by the Board, a candidate must have studied at the College for such time as may be prescribed, and have attended at least three-fourths of the year's lectures and have done practical work in each of the various classes. He must also have obtained from the Principal a certificate permitting him to appear for examination. Lists of the students who have passed the examination successfully will be published as soon as possible after completion of each examination

26. A diploma as Graduate of the Bengal Veterinary College will be awarded to students who have gone through a full course of study at the College and have passed the final examination. Special certificates of proficiency will be awarded to students who have passed the final examination, and who have, during their period of study, been elected clinical clerks, prosectors, and monitors, and have performed their duties satisfactorily.

27. Strict discipline will be maintained within the College. Infringement of rules and regulations by students will be punished by fines, rustication, expulsion, or such other punishment as may be considered advisable by the Principal after due enquiry. Each student, when his name is enrolled on the College books, will receive a copy of the rules and regulations, and on entering the College he will be required to acknowledge by signature his acceptance of such rules and regulations as are in force when he enters, and also such as may be authoritatively introduced from time to time.

28. All officials and servants of the College will be under the control of the Principal for discipline and the due performance of their duties.

29. The officers of the College in accepting their appointments will be considered to accept the rules and regulations then in force and such modification as may be made from time to time under due authority. Each officer will be held responsible for the exact performance of the duties in his branch of the College work and for the results of his teaching.

30. The Principal and Assistant Principal will exercise general supervision over all departments and be in immediate charge of the hospital wards, pharmacy, library, and other parts of the College. The officers engaged in instruction will every week make a report to the Principal of the attendance of the students at their classes and of the individual progress as shown at weekly oral examinations. They will record the matter taught by them weekly in the form of a syllabus for the information of the Principal and Examiners.

31. The Instructor in shoeing will be in immediate charge of the forge building, and will be held responsible for the condition of the feet of all animals in hospital.

32. Clinical clerks will be selected from the senior and more experienced students, and each in turn placed in charge of one of the wards of the hospital to superintend the medical treatment, nursing of the patients, and proper record of cases. Satisfactory performance of the duties of clinical clerk will be recognised by the award of a certificate on graduation.

33. Every student who is not a clinical clerk will perform the duties of dresser. He will be responsible that all instructions as to the nursing and medical treatment of the animals under his charge are carried out by himself.

34. Two students, to act as prosectors, may be appointed by the Lecturer on Anatomy every session. To them will be entrusted the preparation of all "subjects" required to illustrate his lectures, the hanging of diagrams, placing of specimens on the lecture table, &c. Satisfactory performance of these duties will also be recognised by the award of a special certificate.

35. The Principal will furnish a monthly report during the terms to each person or body of persons by whom the students are supported at the College as to their regularity of attendance, progress, and conduct while on the College premises. The progress of each student will be judged from the weekly examinations.

36. Damage to property in the College (as writing on or defacing the doors or walls) is strictly prohibited. The Principal will periodically inspect all the buildings of the College, and enquire into any damage that may have been done.

37. Tables of the times and subjects of the lectures will be posted on the Notice Board at the commencement of each term, to which both teachers and students will adhere.

38. A library and reading-room will be established in the College to assist the students and for professional reference. It will be conducted under special rules, which will be posted up in the room and which will be strictly observed.

39. Models, mounted specimens, diagrams, and expensive instruments, not frequently required, will be kept in the museum. They will there be on view for purposes of study, but in no case be removed except by the teachers when required for use in the lecture-room or hospital.

40. The museum will be under the charge of a Curator, who will be responsible for order and discipline in the museum.

41. The records of the College will be kept by the clerk under the immediate supervision of the Principal or Assistant Principal.

42. The records of the hospital will be kept by the clinical clerks under the immediate supervision of the Assistant Principal.

43. The class-rooms and library of the College will be available for students' meetings at the discretion of the Principal. No students' society, bearing the name of the College, may be formed without his consent.

44. The dissecting-room will be open during daylight to all students, but advanced students only will be allowed to dissect there under the supervision of the Instructor on Anatomy, whose duty it will be to distribute "parts" and "subjects" and record attendance and work.

45. Dissections will be carried on throughout the cold weather session, between 1st November and 28th February, and no student shall, on any pretext whatsoever, be exempt from this most important part of his duties. The strictest discipline, cleanliness, and order are at all times to be preserved in the dissecting-room.

46. A small plot of ground will be arranged on the premises as a botanical garden in such a way as to render it of value to the students in obtaining practical acquaintance with medicinal, dietetic, and poisonous plants. It will at all times be open to the students, and the gardener will, so far as possible, supply them with plants for the practical study of botany.

47. *Post-mortem* examinations are to be made in the case of all animals dying in the hospital, except when the owner has expressed a wish to the contrary. The result will be recorded in a book kept specially for the purpose.

48. The isolation wards will, when occupied, be placed in charge of a special clinical clerk fully instructed as to the measures necessary for the protection of the attendants and the prevention of contagion.

49. The pharmacy and drug store will be in the immediate charge of the Assistant Principal. No student or attendant will be allowed to enter into this part of the hospital without special permission. The Hospital Assistant will be responsible for the proper preparation of medicines, and that neither waste nor mistakes in dispensing be made.

50. Menial servants of the College as sanctioned by Government are to be mustered monthly in the presence of the Principal and then receive their pay. They will hold their posts during good behaviour and satisfactory performance of their duties. Their work will be explained thoroughly to them before they join, and they will be constantly in attendance daily for such hours as may be determined from time to time.

Rules for the admission of animals into the Hospital of the Bengal Veterinary College.

1. Accommodation is available for 250 head of cattle and for 50 horses as patients in the hospital.

2. Animals manifestly suffering from any incurable disease will not be admitted into the hospital without the special sanction of the Principal or Assistant Principal in each case.

3. For the purposes of convenience and accounts, the animals admissible as patients will be dealt with in five classes, as follows:—

Class I.—Horses and ponies belonging to well-to-do owners.

	Rs.	A.	
(*a*) In-patients	1	0	per diem.
with a minimum charge of	12	0	
(*b*) Out-patients	5	0	each case.
(*c*) Charge for examination and written opinion as to soundness	16	0	

Class II.—Horses and ponies belonging to persons of small means and hackney-carriage drivers.

	Rs.	A.	
(*a*) In-patients, horses	0	6	per diem.
with a minimum charge of	5	0	
In-patients, ponies	0	4	per diem.
with a minimum charge of	3	0	
(*b*) Out-patients, horses and ponies	1	0	each case.
(*c*) Examination for soundness and verbal opinion—			
Horses	5	0	
Ponies	5	0	

Class III—Cattle.

	Rs.	A.	
(*a*) In-patients, if fed by owners	Free.		
(*b*) In-patients, if fed by hospital—			
Well-to-do owners	0	6	per diem.
with a minimum charge of	1	8	
Cartmen, goalas, and pack-bullock drivers ...	0	1	per diem.
with a minimum charge of	0	6	
People who are, in the opinion of the Superintendent, unable to pay	Free.		
(*c*) Out-patients—			
Well-to-do owners	0	8	each case.
Others	Free.		

Class IV.—Dogs.

	Rs.	A.	
(*a*) In-patients	0	4	per diem.
with a minimum charge of	3	0	
(*b*) Out-patients for a course of treatment	1	0	
(*c*) Charge for examination	5	0	
(*d*) The property of poor people	Free.		

Class V.—Sheep and Goats.

	Rs.	A.	
(*a*) In-patients	0	2	per diem.
with a minimum charge of	0	8	
(*b*) Out-patients for a course of treatment	0	4	
(*c*) The property of poor people	Free.		

4. The fees mentioned in rule 3 include feeding, nursing, operations, and general treatment.

5. Animals, if not taken away after a week's notice has been given to the owner to the effect that the patient may be removed, will, if able to travel, be sent to the Pinjrapole at Sodepur, by permission of the Committee of the Pinjrapole Society.

6. Out-patients (*i.e.*, animals brought to the hospital and taken away after inspection and advice) in classes II and III will receive advice and medicine *gratis* between the hours of 7 and 11 A.M. Urgent cases will be admitted at any hour.

7. Patients in class I must in each case be accompanied by a syce, who must remain with the animal. Animals in the other classes must be similarly attended to if the Principal or Assistant Principal considers it necessary.

8. With regard to feeding, nursing, and treatment, all patients will be looked after with equal care, irrespective of their classification.

9. All accounts must be settled and charges paid before any animal is removed.

10. Owners of animals may visit the College to see their animals at any time in the day, but will not be allowed to interfere in any way with the treatment of patients.

11. All important operations will be conducted on patients with the aid of chloroform or other anæsthetic.

12. A few horses may be shod in the forge attached to the College. The uniform rate will be Re. 1-8 for shoeing and 12 annas for removals.

13. All animals sent to the College for treatment, &c, receive every care and attention, but the College does not hold itself responsible for any unavoidable accidents or deaths.

14. Advance of money must be made by the owners for treatment when necessary.

W. C. MACPHERSON,
Offg. Secy. to the Govt. of Bengal.

GENERAL DEPARTMENT—(EDUCATION.)

NOTIFICATION—No. 1313T.G.

The 12th July 1902.—In Notification No. 1000T.G., dated the 23rd June 1902, published at page 913 of Part I of the *Calcutta Gazette*, dated the 25th June 1902, *for* "the Hon'ble Prince Mahomed Baktear Shah, C.I.E.," *read* "Sahibzada Muhammad Bakhtiyar Shah, C.I.E."

W. C. MACPHERSON,
Offg. Secy. to the Govt. of Bengal.

FINANCIAL DEPARTMENT.

ADDENDUM—No. 1068T.F.

The 9th July 1902.—The following clause should be added to rule 22 of the Rules relating to money-orders other than revenue money-orders in favour of Government and local bodies entitled to bank at treasuries or sub-treasuries, published under notification No. 791T.F., dated the 19th June 1902, in Part I, pages 913-14 of the *Calcutta Gazette* of the 25th idem:—

"In the case of sub-treasuries a note should be made in the 'Remarks' column of the duplicate list showing on what account each money-order was sent as indicated on the coupon. This column will be blank when received from the post office. The duplicate list will be forwarded to the district treasury with the sub-treasury 'daily sheet.'"

E. W. COLLIN,
Offg. Secy. to the Govt. of Bengal.

MEDICAL DEPARTMENT.

No. 1281T.M.—The 9th July 1902.—Under section 2, Act XXXVI of 1858, the Lieutenant-Governor is pleased to appoint Assistant Surgeon Tarak Nath Mittra to be a visitor of the Patna Lunatic Asylum, *vice* Assistant Surgeon Purna Chunder Singh, transferred.

Patna.

No. 1300T.M.—The 10th July 1902.—Assistant Surgeon Gopal Chunder Mukerjee, on duty in connection with anti-cholera inoculation, is appointed, with effect from the 31st May 1902, to act, in addition to his own duties, as Deputy Sanitary Commissioner, Western Bengal Circle, during the absence, on deputation, of Captain E. E. Waters, I.M.S., or until further orders.

No. 1309T.M.—The 10th July 1902.—Military Assistant Surgeon R. Sharples, employed on plague duty as Assistant Health Officer of the Chapra Municipality, in the district of Saran, is posted temporarily to the Medical College Hospital, during the absence, on deputation, of Military Assistant Surgeon W. D. Neal, or until further orders.

Saran.
Calcutta.

No. 1311T.M.—The 10th July 1902.—Lieutenant-Colonel J. B. Gibbons, I.M.S., Officiating Civil Surgeon of Howrah, is appointed to act as a Civil Surgeon of the first class, with effect from the 4th June 1902, during the absence, on leave, of Lieutenant-Colonel R. Cobb, I.M.S., or until further orders.

Howrah.

No. 1313T.M.—The 10th July 1902.—Major Narendra Prosunno Sinha, I.M.S., Officiating Civil Surgeon of Burdwan, is appointed to act as a Civil Surgeon of the first class, with effect from the 4th June 1902, during the absence, on leave, of Lieutenant-Colonel D. G. Crawford, I.M.S., or until further orders

Burdwan.

No. 1351T.M.—The 11th July 1902.—Lieutenant-Colonel R. R. H. Whitwell, I.M.S., has been granted by His Majesty's Secretary of State for India a further extension of leave on medical certificate for four months.

E. W. COLLIN,
Offg. Secy. to the Govt. of Bengal.

JUDICIAL DEPARTMENT

No. 3050A.

APPOINTMENTS AND TRANSFERS.

No. 1885A.D.—The 10th July 1902.—Babu Jamini Kanta Mukhopadhya, B.L., is appointed to act as a Munsif in the district of Backergunge, to be ordinarily stationed at Patuakhali, during the absence, on deputation, of Babu Ram Narayan Sarkar, or until further orders.

Backergunge.

No. 1914A.D.—The 11th July 1902.—Babu Nagendra Nath Chatterji, Munsif of Bhagalpur, on leave, is appointed to be a Munsif in the district of Dacca, to be ordinarily stationed at Munshiganj, and is vested with the powers of a Judge of a Court of Small Causes for the trial of suits cognizable by such a Court up to the value of Rs 100, within the local limits of the Munshiganj Munsifi.

Bhagalpur.
Dacca.

No. 1918A.D.—The 11th July 1902.—The services of Babu Annada Charan Sen, Munsif of Munshiganj, in the district of Dacca, are placed at the disposal of the Honourable the Chief Commissioner of Assam.

Dacca.

No. 1948A.D.—The 12th July 1902.—Babu Tara Prosonno Dass, Munsif of Aurangabad, in the district of Gaya, is appointed to be a Munsif in the district of Tippera, to be ordinarily stationed at Comilla, and is vested with the powers of a Judge of a Court of Small Causes for the trial of suits cognizable by such a Court up to the value of Rs. 100, within the local limits of the Comilla Munsifi.

Gaya.
Tippera.

No. 1950A.D.—The 12th July 1902.—Babu Hari Nath Ray, Munsif of Comilla, in the district of Tippera, who is now acting as Subordinate Judge of Jessore, is appointed to be a Munsif in the district of Gaya, to be ordinarily stationed at Aurangabad, but will continue to act in his present appointment as Subordinate Judge of Jessore.

Tippera.
Jessore.
Gaya.

No. 1952A.D.—The 12th July 1902.—Babu Nani Gopal Mukerjee, M.A., B.L., is appointed to act as a Munsif in the district of Gaya, to be ordinarily stationed at Aurangabad, during the absence, on deputation, of Babu Hari Nath Ray, or until further orders.

Gaya.

No. 2116A.D.—The 14th July 1902.—Babu Jagadis Chandra Sen, B.L., is appointed to act as a Munsif in the district of Mymensingh, to be ordinarily stationed at Bajitpur, during the absence, on leave, of Maulvi Mirza Bedar Bakht, or until further orders.

Mymensingh.

This cancels the order of the 30th June 1902, appointing Babu Khetter Mohan Roy, B.L., to act as a Munsif in the district of Mymensingh, to be ordinarily stationed at Bajitpur.

No. 2024J.D.—The 9th July 1902.—Babu Trailokya Nath Ghosh is appointed to be an Honorary Magistrate of the Sadar (Balasore) Bench, in the district of Balasore.

Balasore.

No. 1930J.D.—The 10th July 1902.—Babu Srish Chandra Banerjee is re-appointed to be an Honorary Magistrate of the Independent Bench at Raiganj, in the district of Dinajpur.

Dinajpur.

No. 1988J.D.—The 10th July 1902.—Dr James Dyer is appointed to be an Honorary Magistrate of the Regular Bench at Giridih, in the district of Hazaribagh.

Hazaribagh.

No. 2047J D.—The 12th July 1902.—Babu Ambica Charan Mukerjee is appointed to be an Honorary Magistrate of the Independent Bench at Satkhira, in the district of Khulna.

Khulna.

No. 2124J.D.—The 12th July 1902.—The following gentlemen are re-appointed to be Honorary Magistrates of the Sadar Independent Bench, in the district of Dinajpur:—

Dinajpur.

Babu Surendra Narayan Rai. | Babu Nanda Dulal Dhar.

No. 2125J.D.—The 12th July 1902.—The undermentioned gentlemen are appointed to be Honorary Magistrates of the Sadar Independent Bench, in the district of Dinajpur:—

Dinajpur.

Babu Hari Charan Sen. | Babu Purna Chander Sen.
Babu Purnendu Narayan Rai.

LEAVE.

No. 3044A.—The 7th July 1902.—Babu Nagendra Nath Chatterji (No. II), Munsif of Bhagalpur, is allowed leave for eight days, under article 306 (*b*) of the Civil Service Regulations, in extension of that granted to him on the 2nd June 1902.

Bhagalpur.

No. 3045A.—The 8th July 1902.—Babu Khetra Mohan Mitra, Munsif of Arambagh, in the district of Hooghly, is allowed leave for one month, under article 306 (*b*) of the Civil Service Regulations, in extension of that granted to him on the 8th May 1902.

Hooghly.

No. 3046A.—The 10th July 1902.—Babu Nagendra Nath Dhar, Munsif of Kasba, in the district of Tippera, is allowed leave for thirteen days, under article 306 (*b*) of the Civil Service Regulations, in extension of that granted to him on the 9th June 1902.

Tippera.

The 10th July 1902.—Babu Devendro Nath Pal, Munsif of Jangipur, in the district of Murshidabad, is allowed leave for fifteen days, under article 306 (*b*) of the Civil Service Regulations, in extension of that granted to him on the 7th June 1902.

Murshidabad.

No. 1877A.D.—The 9th July 1902.—Babu Gobind Chandra Basak, Subordinate Judge of Tirhut, is allowed leave for sixteen days, viz., nine days under article 309 of the Civil Service Regulations, and the remaining period under article 306 (*b*) of the Regulations, with effect from the date on which he may be relieved.

Tirhut.

RESIGNATION.

No. 2011J.D.—The 10th July 1902.—The Lieutenant-Governor accepts the resignation tendered by Maulvi Masudal Haq of his appointment as an Honorary Magistrate of the Kotchandpur Municipal Bench, in the district of Jessore.

Jessore.

POWERS.

No. 1887A.D.—The 10th July 1902.—Babu Ram Narayan Sarkar, Munsif of Patuakhali, on deputation to Barisal, in the district of Backergunge, is temporarily vested with the powers of a Judge of a Court of Small Causes for the trial of suits cognizable by such a Court up to the value of Rs. 100, within the local limits of the Barisal Munsifi, and also with powers, under section 19 (2) of the Bengal, North-Western Provinces and Assam Civil Courts Act, XII of 1887, to try, under the ordinary procedure, original suits up to the value of Rs. 2,000, arising within the local limits of the original jurisdiction of the District Judge of Backergunge, during the absence, on leave, of Babu Jogendra Nath Mukerjee, or until further orders.

Backergunge.

No. 1916A.D.—The 11th July 1902.—Babu Bunwari Lal Banerjee, Munsif of Munshiganj, in the district of Dacca, is vested with the powers of a Judge of a Court of Small Causes for the trial of suits cognizable by such a Court up to the value of Rs. 100, and with the functions of a District Court under section 26, sub-section (1), of Act VII of 1889, and also with the powers conferred on District Judges under sections 344 to 359, both inclusive, of the Code of Civil Procedure, in regard to cases where the amount of debts owing by the insolvents does not exceed Rs. 1,000, within the local limits of the Munshiganj Munsifi.

Dacca.

No. 1936A.D.—The 12th July 1902.—The following officers are vested with the powers of a Magistrate of the second class:—

Champaran.	Mr. J. C. Leighton,	Assistant Magistrate,	Champaran.
Muzaffarpur.	,, G. Milne,	ditto,	Muzaffarpur.
Bhagalpur.	,, F. M. Luce,	ditto,	Bhagalpur.
Darbhanga.	,, J. A. L. Swan,	ditto,	Darbhanga.

No. 1954A.D.—The 12th July 1902.—Babu Akshay Kumar Basu, Subordinate Judge, Hooghly. Hooghly, is appointed to perform the functions of a Court under section 3, clause (*d*), of the Land Acquisition Act, I of 1894, within the local limits of the original jurisdiction of the District Judge of Hooghly.

No. 1952J.D.—The 9th July 1902.—Mr. Charles William Ansell, Honorary Magistrate of the Independent Bench at Kurseong, in the district of Darjeeling, Darjeeling. is vested with the powers of a Magistrate of the second class. He is also authorised to sit singly for the trial of such cases as may be made over to him by the Subdivisional Officer of Kurseong.

No. 2025J.D.—The 9th July 1902.—Babu Trailokya Nath Ghosh, an Honorary Magistrate of the Sadar (Balasore) Bench, in the district of Balasore, Balasore. is vested with the powers of a Magistrate of the third class.

No. 1931J.D.—The 10th July 1902.—Babu Srish Chandra Banerjee, who has been re-appointed to be an Honorary Magistrate of the Independent Dinajpur. Bench at Raiganj, in the district of Dinajpur, is vested with the powers of a Magistrate of the third class.

No. 1989J.D.—The 10th July 1902.—Dr. James Dyer, who has been appointed to be an Honorary Magistrate of the Regular Bench at Giridih, in the Hazaribagh. district of Hazaribagh, is vested with the powers of a Magistrate of the third class.

No. 2048J.D.—The 12th July 1902.—Babu Ambica Charan Mukerjee, who has been appointed to be an Honorary Magistrate of the Independent Bench Khulna. at Satkhira, in the district of Khulna, is vested with the powers of a Magistrate of the third class.

No. 2126J.D.—The 12th July 1902.—The following gentlemen, who have been re-appointed to be Honorary Magistrates of the Sadar Independent Dinajpur. Bench, in the district of Dinajpur, are vested with the powers of a Magistrate of the third class:—

Babu Surendra Narayan Rai. | Babu Nanda Dulal Dhar.

Babu Surendra Narayan Rai is also authorised to sit singly for the trial of such cases as may be made over to him.

No. 2127J.D.—The 12th July 1902.—The undermentioned gentlemen, who have been appointed to be Honorary Magistrates of the Sadar Independent Dinajpur. Bench, in the district of Dinajpur, are vested with the powers of a Magistrate of the third class:—

Babu Hari Charan Sen. | Babu Purna Chander Sen.
Babu Purnendu Narayan Rai.

C. E. BUCKLAND,
Chief Secy. to the Govt. of Bengal.

NOTIFICATION—No. 1798½J.D.

The 4th July 1902.—The following revised scale of charges for the treatment of animals admitted under the Prevention of Cruelty to Animals Act in the Hospital attached to the Bengal Veterinary College at Belgachia is sanctioned by the Government of Bengal:—

		Rs.	A.	
Class	I.—Horses, ponies and buffaloes	0	4	per diem.
	With a minimum charge of	3	0	
,,	II.—Cattle, deer, small wild herbivora, dogs and cats	0	1	per diem.
	With a minimum charge of	0	6	
,,	III.—Sheep and goats	Free.		
,,	IV.—Poultry and small birds	Do.		
,,	V.—Camels	1	0	per diem.
	With a minimum charge of	12	0	
	Elephants	5	0	per diem.
	With a minimum charge of	60	0	
	Ostriches	1	0	per diem.
	With a minimum charge of	12	0	

C. E. BUCKLAND,
Chief Secy. to the Govt. of Bengal.

PROCLAMATION—No. 2122J.D.

The 12th July 1902.—Under section 15 of Act V of 1861 (as amended by Act VIII of 1895), the Lieutenant-Governor declares that the conduct of the inhabitants of the village of Purbodhola, in the jurisdiction of police-station Netrakona, in the district of Mymensingh, has rendered it expedient to increase the number of the police force by the appointment of an additional force to be quartered therein at the cost of the inhabitants of the said village. This proclamation shall remain in force for a period of six months from this date.

Mymensingh.

C. E. BUCKLAND,

Chief Secy. to the Govt. of Bengal.

POLITICAL DEPARTMENT.

NOTIFICATION—No. 935P.D.

The 14th July 1902.—The following rules have been prescribed by Government regulating the visit of Europeans to Sikkim, in modification of those published under Notification No. 589P.D., dated the 15th June, 1894, and are published for general information:—

I.

Europeans visiting Sikkim are required to carry a pass, and unless provided with such, will not be allowed beyond the Darjeeling frontier.

II.

The Deputy Commissioner of Darjeeling is authorised to issue passes for the ordinary routes on which bungalows are situated, in accordance with the rules laid down regarding travellers' bungalows in Darjeeling and Sikkim.

III.

The Political Officer in Sikkim (head-quarters at Gangtok) is authorised to issue passes to persons wishing to leave the ordinary bungalow routes in Sikkim or to visit Yatung.

Such passes do not authorise the holders thereof to diverge from the road to Yatung or diverge from Yatung in any direction.

C. E. BUCKLAND,

Chief Secy. to the Govt. of Bengal.

POLITICAL DEPARTMENT—(JAILS).

NOTIFICATION.

No. 1406P.—The 15th July 1902.—The Reverend E. H. Whitley is appointed to be a non-official visitor of the Ranchi Jail, *vice* the Reverend F. C. Boyd.

Ranchi.

C. E. BUCKLAND,

Chief Secy. to the Govt. of Bengal.

PUBLIC WORKS DEPARTMENT.

ESTABLISHMENT.

The 11th July 1902.

No. 151.—Mr. C. Addams-Williams, Assistant Engineer, second grade, held charge of the Cossye Division from the forenoon of 18th June to the afternoon of 2nd July 1902.

The 14th July 1902.

No. 152.—Babu Mohendro Nath Dutt, Assistant Engineer, third grade, passed the Lower Standard examination in Urdu on the 7th July 1902.

The 15th July 1902.

No. 153.—The following extract from a notification issued by the Government of India in the Public Works Department is republished for information :—

No. 236, dated the 9th July 1902.—The Governor-General in Council is pleased to order the following promotions and reversions of Chief and Superintending Engineers attached to the Irrigation, Roads and Buildings Branch, with effect from the dates specified :—

NAMES.	From—	To—	Nature of promotion.	With effect from—
*	*	*	*	*
Gwyther, W. B. ...	Executive Engineer, 1st grade, and Officiating Superintending Engineer.	Superintending Engineer, 3rd class.	Temporary	21st May 1902.
Joscelyne, D. ...	Chief Engineer, 1st class, sub. *pro tem.*	Chief Engineer, 1st class.	Permanent	27th „ „
*	*	*	*	*
Toogood, J. H. ...	Superintending Engineer, 1st class, sub. *pro tem.*	Superintending Engineer, 1st class.	Permanent	27th May 1902.
*	*	*	*	*

D. B. HORN,
Offg. Secy. to the Govt. of Bengal.

IRRIGATION DEPARTMENT.

The 15th July 1902.

No. 154.—Notification.—In supersession of this Department Notification No. 133, dated the 9th July 1900, the Hon'ble the Lieutenant-Governor of Bengal is pleased, under section 6 of Act V (B.C.) of 1864, to fix the undermentioned rates and place for tolls to be levied on all steamers, flats, country boats, &c, plying in the new Madaripur bhil route between the rivers Kumar and Madhumati, with effect from the 16th July 1902 :—

I.—Schedule of Tolls.

	Description of vessels.	Rate.
		Rs. A.
1.	On all steamers, per ton, on the gross tonnage ...	0 4
2.	On cargo carried on steamers or on flats, per 100 maunds...	2 0
3.	On steamers plying to or from Naraingunge, per ton on the gross tonnage	0 2
4.	On flats plying to or from Naraingunge, per 100 maunds...	1 0
5.	On all cargo and passenger boats, per 100 maunds ...	0 8
6.	On floats of timber, each timber	0 3
7.	On rafts of bamboos, for each hundred or portion of each hundred	0 4
8.	Minimum toll on all boats	0 1
9.	*Excess tolls.*—Vessels which are passing through the route, and which enter either empty or partially loaded, shall be liable to pay excess tolls at the above rates, if their tonnage by canal measurement is greater on leaving the route than when they entered it.	
10.	*Demurrage.*—Boats will ordinarily be allowed three days in which to make the passage of the route. Demurrage at the rate of half the toll paid will be levied per diem on all boats which remain in the channel longer than three days, subject to a maximum of Rs. 5 per diem.	

II.—Place where tolls are to be levied.

Jolinpar in the 18th mile from the Madhumati river and the 4th mile from the Kumar river.

NOTE.—In the case of steamers and flats belonging to the India General Navigation and Railway Company and the Rivers Steam Navigation Company the gross tonnage of the steamers shall be taken from the steamer's certificate and the amount of cargo carried from the vessel's manifest.

D. B. HORN,
Offg. Secy. to the Govt. of Bengal.

RAILWAY DEPARTMENT.

The 15th July 1902.

No. 148 R.—Declaration.—Whereas it appears to the Lieutenant-Governor of Bengal that land is required to be taken by Government at the public expense for a public purpose, viz, for borrow-pits to fill in plinth of the Agartala station, Assam-Bengal Railway, in the village of Ganganagar, pargana Nurnagar, zilla Tippera, itis hereby declared that for the above purpose a piece of land measuring, more or less, 6 bighas 13 cottahs 5 chitaks of standard measurement, bounded on the north and west by the Railway acquired land, on the east by Bishamber and Gaya Nath's land, and on the south by the Maharaja's khas land, is required within the aforesaid village of Ganganagar.

This declaration is made, under the provisions of section 6 of Act I of 1894, to all whom it may concern.

A plan of the land may be inspected in the office of the Collector of Tippera.

W. A. INGLIS,
Offg. Secy. to the Govt. of Bengal.

MARINE DEPARTMENT.

The 9th July 1902.

No. 92 Marine.—Mr. H. S. Tozer, Senior Master Pilot, is granted, under article 746 (*a*) of the Civil Service Regulations, privilege leave for two months and twenty-eight days, with effect from the 21st July 1902, or such subsequent date as he may avail himself of it.

D. B. HORN,
Offg. Secy. to the Govt. of Bengal.

The 12th July 1902.

No. 93 Marine.—The following notification No. 1627, dated the 4th July 1902, published by the Government of India, relative to the occurrence of plague cases in Constantinople, is republished for general information.

D. B. HORN,
Offg. Secy. to the Govt. of Bengal.

No. 1627, dated Simla, the 4th July 1902.

NOTIFICATION—By the Government of India, Home Department.

THE following telegram is published for general information:—

Telegram dated Therapia, the 1st July 1902.

From—His Britannic Majesty's Ambassador Extraordinary and Plenipotentiary at Constantinople,

To—His Excellency the Viceroy.

Two cases of plague and two suspected Constantinople. Medical inspection of departures.

The 15th July 1902.

No. 94 Marine.—Mr. J. J. Page, late Acting Branch Pilot, who was on the sick list from the 4th to the 9th June 1902, is granted leave for six days under article 743 of the Civil Service Regulations, with effect from the 4th June 1902.

D. B. HORN,
Offg. Secy. to the Govt. of Bengal.

SUBORDINATE CIVIL SERVICE.

No. 3051A.

No. 2093 A.D.—The 14th July 1902.—Babu Annada Charan Guha, Sub-Deputy Collector, Lalbagh, in the district of Murshidabad, is transferred temporarily to the Jangipur subdivision of that district.

Murshidabad.

No. 2095 A.D.—The 14th July 1902.—Babu Balaram Das Gupta, Sub-Deputy Collector, Monghyr, is transferred to the head-quarters station of the Pabna district.

Monghyr.
Pabna.

No. 2097 A.D.—The 14th July 1902.—Babu Nisi Kanta Chatterjee, Sub-Deputy Collector, Pabna, is transferred to the Chandpur subdivision of the Tippera district.

Pabna.
Tippera.

C. E. BUCKLAND,
Chief Secy. to the Govt. of Bengal.

SUBORDINATE EDUCATIONAL SERVICE.

No. 2124A.D.—The 15th July 1902.—The following promotions are sanctioned in the Subordinate Educational Service :—

Promoted to Class II.

Babu Hari Nath Sen, B.A., on leave, with effect from the 1st July 1902, *vice* Babu Adinath Mitra, retired.

Kalika Nanda Mukherjee, on leave, with effect from the 1st July 1902, *vice* Babu Tarak Bandhu Chakravarti, retired.

W. C. MACPHERSON,

Offg. Secy. to the Govt. of Bengal.

CIVIL MEDICAL DEPARTMENT, BENGAL.

No 2004D., dated Darjeeling, the 9th July 1902.—Assistant Surgeon Brojendra Nath Basu did supernumerary duty at the Medical College Hospital, Calcutta, from the afternoon of the 23rd April to the forenoon of the 4th May 1902 and from the forenoon of the 10th May to the afternoon of the 19th June 1902.

No. 2007D., dated Darjeeling, the 9th July 1902.—Assistant Surgeon Badrika Nath Mukerjee, of the Bhola Nath Bose's Dispensary at Barrackpore, is allowed sick leave for six months, under article 369 of the Civil Service Regulations, with effect from the 20th June 1902.

No. 2010D., dated Darjeeling, the 9th July 1902.—Assistant Surgeon Brojendra Nath Basu is appointed to act at the Bhola Nath Bose's Dispensary, Barrackpore, with effect from the 20th June 1902, during the absence, on leave, of Assistant Surgeon Badrika Nath Mukerjee, or until further orders.

No. 2013D., dated Darjeeling, the 9th July 1902.—Assistant Surgeon Lalit Mohun Laha, of the Patna City Dispensary, is allowed privilege leave for three months, under article 291 of the Civil Service Regulations, with effect from the date on which he is relieved of his duties.

No. 2016D., dated Darjeeling, the 9th July 1902.—Assistant Surgeon Premananda Das is appointed to do supernumerary duty at the Medical College Hospital, Calcutta, until further orders, with effect from the forenoon of the 16th June 1902.

No. 2042D., dated Darjeeling, the 9th July 1902.—Assistant Surgeon Premananda Das is appointed to act at the Patna City Dispensary, during the absence, on leave, of Assistant Surgeon Lolit Mohun Laha, or until further orders.

No. 2143D., dated Darjeeling, the 12th July 1902.—Assistant Surgeon Shah Jahan Ali, of the Sassaram Subdivision and Dispensary, in the Shahabad district, is allowed privilege leave for fifteen days, under article 291 of the Civil Service Regulations, in extension of the leave granted him in Civil Medical Department Notification No. 1567D., dated the 21st June 1902.

No. 2149D., dated Darjeeling, the 12th July 1902.—Assistant Surgeon Mohendra Nath Dutt, Inspector in charge of the Central Animal Vaccination Depot, Calcutta, is appointed to the Siliguri Subdivision and Dispensary, in the Darjeeling district, *vice* Assistant Surgeon Mohendra Kumar Chakravarti, transferred.

No. 2153D., dated Darjeeling, the 12th July 1902.—Assistant Surgeon Mohendra Kumar Chakravarti, of the Siliguri Subdivision and Dispensary, in the Darjeeling district, is appointed as Inspector in charge of the Central Animal Vaccination Depôt, Calcutta, *vice* Assistant Surgeon Mohendra Nath Dutt, transferred.

T. H. HENDLEY, COL., I.M.S.,

Inspector-General of Civil Hospitals, Bengal.

TREASURY NOTICES.

UNCOVENANTED DEPUTY COLLECTOR BABU JOTINDRA NATH DAS has been placed in charge of the Purnea Treasury and is authorised to draw bills on other Treasuries.

H. C. WILLIAMS, *Commissioner.*

COMMR.'S OFFICE, BHAGALPUR DIVN., *the 7th July 1902.*

HIGH COURT NOTICE.

Dates of the 4th and 5th Criminal Sessions for the year 1902.

No. of Sessions.	Day of the week	Date.
Fourth Sessions	... Monday	... August 18th.
Fifth Do.	... Do.	... December 1st.

By order,

J. G. APCAR, *Clerk of the Crown.*

HIGH COURT, CROWN OFFICE, *the 25th day of June 1902.*

EDUCATION DEPARTMENT, BENGAL.

Subordinate Educational Service.

The 22nd June 1902.—The following arrangements are sanctioned consequent on the retirement, with effect from the 1st July 1902, of Babu Hem Chandra Banerjea, Assistant Head Master of the Ravenshaw Collegiate School, Cuttack:—

(1) Babu Suresh Chandra Gupta, B.A., an Assistant Master in the Ravenshaw Collegiate School (class VI), is appointed to be Assistant Head Master of the same institution, on the pay of his own grade, *vice* Babu Hem Chandra Banerjea.

(2) Babu Nilmani Sadhukhan, M.A., Head Master, Ranchi Training School (class VIII), is appointed to be an Assistant Master in the Ravenshaw Collegiate School and Lecturer in the Ravenshaw College, Cuttack, on the pay of his own grade, *vice* Babu Suresh Chandra Gupta.

(3) Babu Hira Lal Bhattacharjea, M.A., Assistant Head Master of the Darjeeling High School, under training at the Kurseong Training College (class VI), is appointed to be Head Master of the Ranchi Training School, on the pay of his own grade, *vice* Babu Nilmani Sadhukhan, transferred.

(4) Babu Satis Chandra Mittra, B.A., an Assistant Master and now Officiating Assistant Head Master of the Darjeeling High School (substantive *pro tempore* in class VIII), is confirmed in the latter appointment, on the pay of his own grade, *vice* Babu Hira Lal Bhattacharjea, transferred.

(5) Babu Jogendra Nath Bose, B.A., an Assistant Master in the Darjeeling High School (now officiating in class VIII), is appointed substantively *pro tempore* to that class in the resulting vacancy consequent on the retirement of Babu Hem Chandra Banerjea.

The 5th July 1902.—The following arrangements are sanctioned consequent on the resignation by Babu Kanhya Lal of his appointment as an Assistant Master in the Bihar School of Engineering:—

(1) Babu Kumud Nath Chaudhuri, M.A., Laboratory Assistant in the Civil Engineering College, Sibpur (class VIII), to be an Assistant Master in the Bihar School of Engineering, on probation for six months and on the pay of his own grade, *vice* Babu Kanhya Lal.

(2) Babu Bijay Krishna Sen Gupta (Agricultural scholar), Officiating Science Teacher in the Dacca Training School (officiating in class VIII), to be Laboratory Assistant in the Civil Engineering College, Sibpur, on probation for six months, *vice* Babu Kumud Nath Chaudhuri, and substantively *pro tempore* in class VIII, in the resulting vacancy consequent on the resignation of his appointment by Babu Kanhya Lal.

The 7th July 1902.—Babu Sri Mohan Banerjea, a Sub-Inspector of Schools under the District Board of the 24-Parganas, was granted by the Board medical leave for one month, with effect from the 18th April 1902.

Babu Sris Chandra Chaudhuri, a Sub-Inspector of Schools under the District Board of the 24-Parganas, has been granted by the Board privilege leave for three months, with effect from the 19th May 1902.

Babu Bhubaneswar Sanyal, Sub-Inspector of Schools, Giridih (class VII), has been granted by the District Board of Hazaribagh privilege leave for one month, with effect from the 8th June 1902.

Babu Tarak Ram Dubey, Sub-Inspector of Schools, Singhbhum (class VI), is allowed leave of absence for three months, under article 294 of the Civil Service Regulations, with effect from the 15th June 1902, or such subsequent date as he may have availed himself of it.

The 8th July 1902.—Babu Naga Ram, a Sub-Inspector of Schools under the District Board of Shahabad (class VII), has been granted by the Board furlough for eighteen months, with effect from the 11th June 1902.

The 9th July 1902.—Babu Prabodh Chandra Sen, M.A., is appointed, on probation for six months, to be an Assistant Master of the Dacca Collegiate School, *vice* Babu Bharat Bandhu Laha, transferred.

Babu Prabodh Chandra Sen is also appointed substantive *protempore* to class VIII in the resulting vacancy consequent on the retirement of Babu Rajani Kanta Ghosh.

The 10th July 1902.—Babu Kedar Nath Mukherjea, B.A., Deputy Inspector of Schools, Ranchi (class V), is allowed leave of absence for two months, under article 291 of the Civil Service Regulations, with effect from the 15th June 1902.

Babu Ram Chandra Banerjea, Sadar Sub-Inspector of Schools, Ranchi (class VII), is appointed to act as Deputy Inspector of Schools, Ranchi, on the pay of his own grade, during the absence, on leave, of Babu Kedar Nath Mukherjea, or until further orders.

The 11th July 1902.—Babu Madhusudhan Das, B.A., Assistant Master in the Cuttack Training School (class VII), on deputation to the Kurseong Training College for special training, is appointed to be an Assistant Master in the Balasore Zilla School, on the pay of his own grade, *vice* Babu Upendra Narayan Datta Gupta, transferred.

Babu Gopi Nath Das, B.A., Assistant Master in the Balasore Zilla School, is appointed to act in class VIII, consequent on the absence, on deputation, partly of Babu Upendra Narayan Datta Gupta and of Babu Madhusudhan Das.

Mr. A. Greene, B.A., is confirmed in his appointment as an Assistant Master in the Victoria Boys' School, Kurseong, and in class VI, with retrospective effect from the date of his probationary appointment.

Maulvi Kabiruddin Ahmad, B.A., Deputy Inspector of Schools, Faridpur (class IV), is allowed leave of absence for thirty-one days, under article 291 of the Civil Service Regulations, with effect from the 12th July 1902, or such subsequent date as he may avail himself of it, on being relieved by Babu Sarada Prasad Banerjea, who has been appointed Additional Deputy Inspector of Schools, Faridpur, and who will hold charge of the office of the Deputy Inspector of Schools, Faridpur, in addition to his own duties.

Erratum.—The 14th July 1902.—In the notification dated the 24th June 1902, published at page 957, Part I of the *Calcutta Gazette* of the 2nd July 1902, confirming Babu Kesav Lal Saha in his appointment as Sub-Inspector of Schools, Darjeeling, Terai, and in class VIII of the Subordinate Educational Service, with effect from the 1st July 1902, *vice* Babu Pran Krishna Banerjee, *read* "Babu Kesav Lal Saha" *for* "Babu Kesar Lal Saha."

A. PEDLER,
Director of Public Instruction, Bengal.

Results of the Final Examination of the Dacca Survey School for the year 1902.

FIRST DIVISION.

1. Amrita Lal Bandopadhaya.
2. Lalit Mohon Ghatak.

SECOND DIVISION.

1. Sital Chandra Banerjee.
2. Basanta Kumar Mazumdar.
3. Baroda Kanta Chakraburty.
4. Jogesh Chandra Das Gupta.
5. Surendra Kishore Bose.
6. Sirish Chandra Basak.
7. Banowari Lal Bhoumic.
8. Upendra Chandra Dey.
9. Ramoni Mohon Sanyal.
10. Durga Charan Das Gupta.
11. Kazi Mahammad Fariduddin.
12. Satish Chandra Bals.
13. Ram Lal Taluqdar.
14. Jadu Nath Sannyal.
15. Mohendra Chandra Lodh.
16. Devendra Chandra Goon.
17. Subodh Kumar Banrjee.

THIRD DIVISION.

1. Satish Chandra Bandopadhaya.
2. Tarak Chandra Roy.
3. Jatindra Nath Das Gupta.
4. Digendra Mohon Nandy.
5. Biswa Nath Dhar.
6. Phanindra Mohon Chatterjee.
7. Jajneswar Kundu.
8. Nishi Kanta Dey.
9. Upendra Kishore Dutta.
10. Mohesh Chandra Dey.
11. Narendra Kumar Das.
12. Kadam Ali.
13. Upendra Nath Chakladar.
14. Abala Bandhu Das.
15. Suresh Chandra Biswas.
16. Devendra Nath Bhattacharjee.
17. Rajani Kanta Ray.
18. Syed Wares Uddin.
19. Brojendra Kumar Dutta.
20. Kamakhya Charan Ray.
21. Kailash Chandra Biswas.
22. Lal Mohon Gosh.
23. Jogendra Nath Sen.

A. PEDLER,
Director of Public Instruction, Bengal.

The 14th July 1902.

TRAINING SCHOOLS FOR BENGAL.

COURSE FOR THE SESSION 1902-1903.

THE following Courses of studies are prescribed :—

FIRST-YEAR CLASS.

Subject.			Names of books.
I.—Bengali literature,	Prose	...	Charupatha, III, by Akshay Kumar Datta (first 150 pages).
	Poetry ...	...	Raghuvansa, by Nabin Chandra Das (Cantos XIII, XIV and XV).
	History of Bengali literature	...	By Dinesa Chandra Sen. Vaishnab literature (from page 101 to the end of page 386).
	Grammar (Bengali)	...	By Nakuleswar Vidyabhushan (the first half).
	Letter-writing.		
	Essay-writing (on historical and scientific subjects treated of in the text-books).		
II.—Sanskrit	...	...	Rijupatha, I (first half).
Grammar	...	...	Upakramanika, by Vidyasagar.

III.—History of India, General Geography, with special reference to the Geography of Bengal and Physical Geography—

History of India ... By Haraprasad Sastri, or by Hemlata Devi, or by Isan Chandra Ghosh.

Geography—General. Physical Geography—Bhuvidya, by Radhika Prasanna Mukerji (first half).

IV.—Arithmetic and Algebra—

Arithmetic (the whole).

Algebra (up to end of fractions).

V.—Geometry and Mensuration—

Euclid (Books I and II and first 19 propositions of the third book).

Mensuration of lines and surfaces. Pierpoint's Middle School Mensuration (Longmans').

VI.—Elementary Science—

Physics (Arts. 43—66 of Balfour Stewart's Physics Primer).

Hygiene up to Standard IV.

Chemistry up to Standard IV.

Botany up to Standard IV.

Agriculture up to Standard IV.

Natural History up to Standard IV.

VII.—Drawing and Practical Geometry—

Practical Geometry (first 53 problems of Morris's Geometrical Drawing).

Drawing—

(*a*) Straight lines, simple and compound curves, to be drawn to the exact size of examples.

(*b*) Straight lines and curves to be enlarged or reduced on a given scale.

VIII.—Art of Teaching—Notes from Salmon's or Barnett's Art of Teaching—

Object lessons (up to Standard III).

Kindergarten (up to the Infant stage).

IX.—Manual work (Optional)		...	Seed-placing, paper-plaiting, stick-laying, clay-modelling or rope-work.
Drill	...	...	Sharp's book (first half).

SECOND-YEAR CLASS.

I.—Bengali Prose	...	...	Nanaprabandha, by Raj Krishna Mukerjea (from page 55 to the end).
Poetry	...	...	Meghnadbadha (last three Cantos).
Grammar	...	...	By Nakuleswar Vidyabhushan (second half).
Letter-writing and essay.			
History of Bengali literature		...	By Dinesa Chandra Sen (whole, omitting first 100 pages).
II.—Sanskrit	...	...	Rijupatha, III, up to Jatugrihadaha.
Vyakaran-Sangraha	...	...	By Heramba Tattwaratna (whole).
III.—Translation of Lethbridge's History of the World.			
Physical Geography		...	Bhuvidya, by Radhika Prasanna Mukerji.

IV.—(*a*) Algebra (to end of Quadratic equations).

(*b*) Statics (Arts. 1 to 25, 28, 29, 36 to 38, 51 to 55, 96 to 103, 115, 116, 122 to 127, 133 to 136, 138, 159, 162 from Loney's Elements of Statics 5th Edition).

Dynamics (Arts. 1 to 7, 9 to 12, 32, 34, 35, 40 to 44 from Loney's Elements of Dynamics, 5th Edition).

V.—Geometry and Surveying—

Euclid (Books I to IV).

Surveying—General elementary surveying, chain and compass surveying, plotting and field-book.

VI.—Elementary Science—

Physics (Revision of first-year Course and Arts. 67—90 of Balfour Stewart's Physics Primer).

Chemistry up to Standard VI.

Hygiene up to Standard VI.

Agriculture up to Standard VI.

Botany up to Standard VI.

Natural History up to Standard VI.

VII.—Practical Geometry (first 120 problems—Morris's Geometrical Drawing).

Drawing—

(*a*) Free-hand Drawing.

(*b*) Model Drawing. Delineation in outline of simple solids, as cubes, cones, etc.

VIII.—Art of Teaching—Notes from Salmon's or Barnett's Art of Teaching—

Object lessons (up to Standard IV).

Kindergarten (up to Infant stage).

IX.—Manual work (optional) and drill—

Mat-weaving and basket-making in addition to the first-year Course.

Drill ... ... Sharp's book (whole).

A. PEDLER,

The 15th July 1902. *Director of Public Instruction, Bengal.*

CHITTAGONG DIVISION.

Rules for the admission of Private Students to the University Examinations of 1903.

I.—ENTRANCE EXAMINATION.

1. A student who does not appear from any school, or who has been transferred since the 1st of September next preceding the examination, without the consent of an Inspector of Schools, to the school from which he appears, will be treated as a private student.

2. The term "private student" includes school-masters.

3. Private students are required to attend the test examination of one of the undermentioned high schools, on dates to be fixed by the Head-masters :—

(1) Comilla Zilla School.
(2) Brahmanbaria Annada High School.
(3) Chandpur High School.
(4) Noakhali Zilla School.
(5) Feni High School.
(6) Chittagong Collegiate School (with the Principal's permission).
(7) Chittagong Madrasa.
(8) Chittagong Municipal High School.
(9) Rangamati Government High English School.

4. Applications for permission to appear at the test examination should be made to the Inspector of Schools, and they must reach his office on or before the 15th November 1902.

5. Every private candidate shall state in his application whether he is an ordinary private candidate or a school-master, his age, residence and father's name, the school at which he desires to appear for the test examination and his postal address, which should be written legibly and distinctly, so that no mistake may be likely to occur.

6. A private candidate who is not a school-master should file with his application the Transfer Certificate (in original) granted him from the school in which he last studied; or, if he failed at a previous Entrance Examination and did not join a school afterwards, the Registrar's receipt (in original) for the fee paid; or he will furnish satisfactory proof that he has not failed at the test examination of any entrance school in the current session, and that he is of good moral character.

7. A school-master will have to file with his application a certificate from the Secretary or Proprietor of the school in which he is serving to the effect that he has been a *bond fide* paid teacher of the school since the 2nd June 1902. In case he has served in more than one school, he must produce certificates from the several schools of his having been a *bond fide* paid teacher all along since the 2nd June 1902.

8. If this office is satisfied that the necessary conditions have been fulfilled, the permission asked for will be granted and sent to the applicant, who must produce it before the Head-master of the school at which he desires to appear for the test examination.

9. A private candidate should be identified to the satisfaction of the officer conducting the test examination.

10. Each private student will pay a fee of Rs. 2 to the Head-master of the school at which he appears for the test examination. The fee is intended to meet the cost of the examination and charges for postage, &c.

11. The Head-master of each of the abovenamed schools is requested to direct the private candidates who may pass at the test examination from his school to appear before him on a fixed date, which should not be later then the 2nd January, and cause them to fill in the forms of application for admission to the Entrance Examination in his presence. He will then sign the certificates appended to the applications, and forward them to this office (in a registered cover, if sent by post) for countersignature. Under no circumstances should the entrance fee be sent to this office.

12. After countersignature the applications will be sent by the Inspector direct to the candidates, who must make their own arrangements for the transmission of their applications and fees to the Registrar of the Calcutta University, so as to be received at his office on or before the 22nd January 1903.

13. The Entrance Examination will be held on the 2nd March 1903 and following days.

II.—F.A. AND B.A. EXAMINATIONS.

1. Deputy Inspectors of Schools, Sub-Inspectors of Schools and *bonâ fide* masters of English schools, who have served as such for the full period of two academical years after passing the Entrance, will be admitted to the F.A examination; and those who have served for the same period after passing the F.A. will be admitted to the B.A. Examination. Candidates who have failed in the F.A. or B.A. examination may be admitted to the same examination if they have served for a term of six months since the date of the last examination.

2. By *bonâ fide* masters of English schools are to be understood teachers who hold regularly paid appointments in recognised English schools teaching at least the Middle English course.

3. All applications from school-masters to the Inspector for permission to appear at the F.A. or B A. examination should be accompanied by certificates of length of service (with dates) from the Secretaries of the schools in which they are employed, and should reach this office not later than the 5th January 1903.

4. The application of a school-master for admission to the F.A. or B.A. examination should be signed by him in the presence of the Secretary or a member of the Managing Committee of the school in which he is employed. It should then be forwarded to the Inspector for his signature, accompanied by (1) a certificate from the Secretary or a member of the Managing Committee to the effect that it has been signed by the candidate in his presence; (2) the University certificate of the candidate in proof of his having passed the Entrance or F.A. examination, as the case may be; and (3) the Registrar's receipt to prove, if this be the case, that the candidate has appeared at the examination of any previous year. The B.A. candidates should also send in their Entrance pass certificates.

5. After signature by the Inspector, the application, together with the documents that accompanied it, will be returned to the candidate, who will have to send the application and the examination fee to the Registrar of the Calcutta University, so as to reach his office on or before the 2nd February 1903.

6. The F.A. and B.A. Examinations will be held on the 16th March 1903 and following days.

CHITTAGONG,
The 24th June 1902.

MUHAMMAD IBRAHIM,
Inspector of Schools, Chittagong Division.

NOTIFICATIONS OF THE BOARD OF REVENUE.

No. 1716B.

NOTICE is hereby given that the Eighth Sale of Opium, the Provision of 1900-1901, will be held at the Government Opium Sale-room, No. 2 Bankshall Street, on Monday, the 4th August 1902, at 11 A.M., and will comprise 4,000 chests, viz:—

		Chests.
Opium manufactured at the Patna Factory, consisting of	... ...	2,000
Ditto ditto at the Ghazipur Factory, consisting of	...	2,000
Total	...	4,000

2nd.—The general conditions of the sale now advertised will be the same as usual. They may be ascertained by reference to the Notification issued on the 19th November 1901, and published in the *Government* and *Exchange Gazettes*, or on personal application at the Office of the Board of Revenue.

3rd.—The latest dates for deposit and clearance will be the 9th and 19th August 1902, respectively, that is to say, no Bank of Bengal Receipts, Government Promissory Notes, or other public securities that may be tendered for deposit in redemption of Promissory Notes given by purchasers in the sale-room will be received after 1-30 P.M. of Saturday, the 9th August 1902, and no Bank of Bengal Receipts in full payment of lots will be accepted after 3-30 P.M. of Tuesday, the 19th August 1902.

4th.—In addition to the quantity above advertised for sale, the following quantities, more or less, of the opium manufactured at the Patna and Ghazipur Factories will be brought to sale down to December next, on or about the dates specified below. The Board of Revenue, however, reserve to themselves the right of altering these dates, should circumstances render it expedient to do so:—

DATES.	Manufactured at the Patna Factory; about chests.	Manufactured at the Ghazipur Factory; about chests.	Total; about chests.
On or about Monday, 1st September 1902 ...	2,000	2,000	4,000
On or about Monday, 29th September ,, ...	2,000	2,000	4,000
On or about Monday, 3rd November ,, ...	2,000	2,000	4,000
On or about Monday, 1st December ,, ...	2,000	2,000	4,000
Total ...	8,000	8,000	16,000

By order of the Board of Revenue, L. P.,
H. WHEELER, *Secretary.*

BOARD OF REVENUE, L. P., CALCUTTA, *the 1st July 1902.*

ELECTION OF MUNICIPAL COMMISSIONERS.

NOTIFICATION.

IT is hereby notified for general information that at the bye-election held on Monday, the 23rd June 1902, Babu Hardwar Mull was duly elected a Commissioner in Ward No. III of the Darbhanga Municipality, in the district of Darbhanga, *vice* Babu Hori Mohon Banerjee, resigned under section 27 (*a*) (2) of the Act.

E. F. GROWSE, *Offg. Additional Commissioner.*

PATNA COMMR.'S OFFICE, BANKIPORE, *the 8th July 1902.*

NOTIFICATION.

IT is hereby notified for general information that a bye-election will be held on Saturday, the 30th August 1902, in Ward No. V of the Santipur Municipality, in the district of Nadia, to elect a Commissioner for that ward in the place of Babu Jasada Nandan Pramanik, deceased.

CHANDI DAS GHOSE, *Persl. Asst.*, for *Commr.*

COMMR.'S OFFICE, PRESY. DIVN., CALCUTTA, *the 15th July 1902.*

NOTIFICATION.

THE following gentlemen have been appointed to be members of the Committee for the management of the Bihar Dispensary, in the district of Patna:—

(1) Maulvi Syed Muhamad Nazim, *vice* Maulvi Mohamad Zahir, deceased.
(2) ,, Shaikh Muhamad, *vice* Babu Nanda Ram Bhatta, resigned.

E. F. GROWSE, *Offg. Additional Commissioner.*

PATNA COMMR.'S OFFICE, BANKIPORE, *the 12th July 1902.*

NOTIFICATION.

IT is notified for general information that Babu Devendra Nath Sarkar has been appointed to be a member of the Bagnapara Union Committee, in the district of Burdwan, under section 43 of the Local Self-Government Act, *vice* Babu Beni Madhab Ghosh, resigned.

RAJMOHAN CHAKRABUTTY, *Persl. Asst.*, for *Commr. on tour.*

BURDWAN COMMR.'S OFFICE, CHINSURA, *the 14th July 1902.*

The Calcutta Gazette.

WEDNESDAY, JULY 16, 1902.

PART IA.

Orders and Notifications by the Government of India, &c.

[*Reprinted from the "Gazette of India."*]

The following orders, issued by the Government of India in the Home Department, are republished for general information.

C. E. BUCKLAND,
Chief Secy. to the Govt. of Bengal.

NOTIFICATIONS.

MUNICIPALITIES.

Simla, the 8th July 1902.

No. 119.—In exercise of the powers conferred by section 6 of the Provident Funds Act, 1897 (IX of 1897), the Governor-General in Council is pleased to extend the provisions of the said Act to the Provident Fund established by the Corporation of Calcutta, under section 73, clause (*c*) of the Calcutta Municipal Act, 1899 (Bengal Act III of 1899).

JUDICIAL.

The 11th July 1902.

No. 1050.—The services of Major G. A. Welman, 13th Madras Infantry, are placed temporarily at the disposal of the Government of Bengal for employment as an Officiating Cantonment Magistrate.

J. P. HEWETT,
Secy. to the Govt. of India.

GOVERNMENT OF INDIA.

HOME DEPARTMENT.

APPOINTMENT OF A COMMISSION TO INQUIRE INTO THE ADMINISTRATION OF THE POLICE IN BRITISH INDIA.

Nos. 510—527.

Extract from the Proceedings of the Government of India in the Home Department (Police),—under date Simla, the 9th July 1902.

RESOLUTION.

The Governor-General in Council has determined, with the approval of the Secretary of State, to appoint a Commission to inquire into the administration of the police in British India.

2. The matters into which the Commission will inquire and report are—

(*i*) whether the organization, training, strength, and pay of the different ranks of the district police, both superior and subordinate, foot and mounted, whether on ordinary duty or in the reserve, are adequate to secure the preservation of the public peace and the proper investigation and detection of crime, and, if not, what changes are required in them, respectively, in each province with regard to its local conditions, in order to attain these objects;

(*ii*) whether existing arrangements secure that crime is fully reported or require to be supplemented in any way; and, in particular, whether the village officers and the rural police in each province are efficient aids to the district police in the matter of reporting crime, and, if not, how the relations between the former and the latter can (subject to the condition that the rural police in each province must not be enrolled under the Police Act) be improved;

(*iii*) whether the system of investigating offences now in force in each province, the object being to provide for the full investigation of all serious crime, while avoiding interference by the police in trivial matters, is capable of improvement, and, if so, in what manner; and whether the institution of fully-organized Criminal Investigation Departments, either Imperial or Provincial, is recommended;

(*iv*) whether the form of statistical returns now adopted is satisfactory or capable of improvement, and whether the use to which such returns are now put as tests of police working is appropriate or not;

(*v*) whether the general supervision exercised by the Magistracy over the police, and the control of the superior officers (including Inspectors) over the investigation of crime are adequate to prevent oppression on the part of the subordinate police; and, if not, how they can be made so;

(*vi*) whether the existing organization of the railway police, its operation as between provinces and states, and its connection with the district police are in a satisfactory condition, and, if not, what improvements can be effected; and

(*vii*) whether the career at present offered to natives in the police in each province is sufficiently attractive to induce the proper stamp of men to enter it; and, if not, what steps can be taken to remedy this evil consistently with the recognized measure of necessity for European control in the district charges.

3. It is to be understood that, while in some matters [as, for instance, those referred to under heads (*iii*), (*iv*) and (*vi*)] it is important to secure uniformity throughout India, in others and especially in those dealt with under head (*i*), uniformity is neither desirable nor possible; and that what should be aimed at is not mechanical symmetry, but due proportion with regard to such considerations as the criminality of the people, the number and gravity of the offences to be dealt with, the density of the population, the area to be policed, and so forth.

4. The Commission will consist of the Hon'ble Mr. A. H. L. Fraser, C.S.I., Chief Commissioner of the Central Provinces, President; the Hon'ble Mr. Justice Candy, Puisne Judge of the Bombay High Court; the Hon'ble the Maharaja of Darbhanga, K.C.I.E., Additional Member of the Council of the Governor-General; the Hon'ble Srinavasa Raghava Aiyangar, C.I.E., Dewan Bahadur, Additional Member of the Council of the Governor of Madras; the Hon'ble Lieutenant-Colonel J. A. L. Montgomery, Member of the Council of the Lieutenant-Governor of the Punjab; Mr. W. M. Colvin, Barrister-at-Law, of Allahabad; and Mr. A. C. Hankin, C.I.E., Inspector-General of Police in the Hyderabad State. The Secretary of the Commission will be Mr. H. A. Stuart, Inspector-General of Police in the Madras Presidency. During the visit of the Commission to each province, where its inquiries will be conducted, a local member will be appointed to the Commission by the Local Government or Administration, in order to represent the views of the local authorities and to see that the local circumstances and conditions are fully laid before the members of the Commission. The local Commissioners will not be required to join in the preparation of the final report.

5. In order to facilitate the inquiries of the Commission, and to ensure that a definite and concise statement of the case as it presents itself to each Local Government and Administration may be placed before the Commissioners in anticipation of their inquiries, each Local Government and Administration should proceed without delay to appoint a Committee, consisting of a District and Sessions Judge, a District Magistrate, and District Superintendent of Police, in the provinces of Madras, Bombay, the United Provinces, and the Punjab, and elsewhere of a District Magistrate and District Superintendent of Police, to proceed to such districts as are considered most important from a police point of view, and inquire into the matters set out in the heads of the order of reference. The Bengal Government has recently made a local inquiry into the organization of the police in that province, and the Government of India will therefore not require a local Committee to be appointed in Bengal. The Government of India are not aware that any other Local Government or Administration has recently collected, by means of a similar inquiry, the material necessary to prepare its case for presentation to the Commission, but in any province in which this has been done, a local Committee need not be appointed unless the Local Government or Administration desires to follow this course. It is not intended that the Committees conducting these preliminary inquiries should record any formal evidence or prepare a formal report. They should discuss the questions referred for the opinion of the

Commission orally on the spot, taking particular care to ascertain the views of non-official natives of India on them. On the completion of their inquiries they should present a statement of the case into which the Commission is to inquire for the consideration of the Local Government or Administration. This statement would describe the existing arrangements in each province under each of the heads of reference; note the defects which had been brought to the notice of the Committee and the remedies which had been proposed; suggest the officials and non-officials that would be most able to assist the Commission in the capacity of witnesses; and, while avoiding the discussion of either defects or remedies (beyond noticing the degree of importance attached to each by public opinion generally), serve as a summary of the case for inquiry to be placed, together with the views of the Local Government upon it, before the Commission for its information and assistance. It is intended that the Commission should assemble on the 15th of October, and it is necessary that the Committees to undertake these preliminary inquiries should be appointed and set about their business without any delay, since the provincial statements of the case should reach the Government of India in time to be placed in the hands of the members of the Commission before they enter upon their labours.

6. The general inquiry will be public, and its conduct and the regulation of the course of business are entrusted to the President in communication with the members. The inquiries of the local Committees will place before the Commission valuable information as to the witnesses who may be expected to assist it in its work, but this arrangement is not intended to limit the Commission in the selection of any witnesses whom it may desire to examine. The Governor-General in Council leaves it to the President to determine the procedure to be adopted in obtaining and recording evidence. The Commission, through the Secretary, acting under instructions from the President, will correspond directly with Local Governments. The Governor General in Council desires that all communications or requisitions for information emanating from the Commission may be treated as urgent and complied with promptly, and that, in each province which the Commissioners visit, they may be afforded every facility for prosecuting their inquiries.

ORDER.—Ordered that a copy of this Resolution be forwarded to all Local Governments and Administrations, and to the President and members of the Commission for information and guidance.

Ordered, also, that the Resolution be published in the *Supplement to the Gazette of India*.

[TRUE EXTRACT.]
J. P. HEWETT,
Secretary to the Government of India.

The following order, issued by the Government of India in the Department of Revenue and Agriculture, is republished for general information.

C. E. BUCKLAND,
Chief Secy. to the Govt. of Bengal.

NOTIFICATION.

EMIGRATION.

Simla, the 10th July 1902.

No. 1569—23-6.—The following draft of a Notification which it is proposed to issue in exercise of the powers conferred by section 80 of the Indian Emigration Act, 1883 (XXI of 1883), is published, as required by section 81 of the said Act, for the information of persons likely to be affected thereby, and notice is hereby given that the draft will be taken into consideration by the Governor-General in Council on or after the 12th August 1902.

2. Any objection or suggestion which may be received from any person with respect to the draft before the date fixed as aforesaid will be considered by the Governor-General in Council.

Draft Notification.

In exercise of the power conferred by section 80 of the Indian Emigration Act, 1883 (XXI of 1883), the Governor-General in Council is pleased to direct that the following amendment be made in the rules as published with the Notification of the Government of India in the Department of Revenue and Agriculture, No. 94E., dated the 18th March 1886, and subsequently amended, namely :—

In Schedule A for the rule regarding "Iron decks," the following shall be substituted :—

"*Iron decks.*—Every vessel bound to any place west of the Cape of Good Hope, or to Fiji *viâ* South Australia, having iron between-decks, shall have either a substantial watertight wooden deck properly laid over it, or sleeping platforms properly fitted on each side of the vessel in a fore and aft direction equal in area to the between-deck accommodation. These platforms shall be in two tiers at most; but where the platforms do not provide sufficient accommodation, then additional platforms may be similarly fitted amidships either in a single or double row as may be required, care being taken to provide sufficiently wide clear passages fore and aft between the rows of platforms. The bottom of the lower tier shall be not less than twelve inches from the deck, and the bottom of the upper tier not less than two feet six inches from the bottom of the tier below, and the bottom boards of the lower tier shall be fitted loose in an athwartship direction in sections convenient for easy removal and deck cleaning. A margin board six inches high shall be fitted along the edges of the platforms and, where a double row of platforms is fitted

amidships, a board nine inches high shall be fitted fore and aft, dividing such platforms into two equal width of six feet.

"Mats and extra blankets shall also be supplied for the use of the emigrants to such extent as may be determined by the Surgeon-Superintendent in charge."

R. G. HARDY,
Offg. Secy. to the Govt. of India.

The following orders, issued by the Government of India in the Foreign Department, are republished for general information.

C. E. BUCKLAND,
Chief Secy. to the Govt. of Bengal.

NOTIFICATIONS.

Simla, the 8th July 1902.

No. 1130G.—With the sanction of His Majesty's Government, the Governor-General in Council is pleased to recognise provisionally the appointment of Monsieur Charles Jambon as Consul for Uruguay at Calcutta.

The 11th July 1902.

No. 1159G.—The services of Mr. J. Leng, of the Indian Civil Service, a Political Agent of the 4th class, on furlough, are replaced at the disposal of the Home Department with effect from the 6th June 1902.

No. 1166G.—The following changes are made in the graded list of the Political Department:—

* * * * * * * *

Consequent on the grant of privilege leave and furlough combined to Major G. F. Chenevix Trench, Indian Staff Corps, a Political Agent of the 3rd (officiating 2nd) class, and with effect from the 15th June 1902,—

* * * * * * * *

Mr. E. V. Gabriel, of the Indian Civil Service, an Officiating Political Assistant of the 2nd class (on privilege leave), to officiate as a Political Assistant of the 1st class.

H. S. BARNES,
Secy. to the Govt. of India.

The following orders, issued by the Government of India in the Finance and Commerce Department, are republished for general information.

C. E. BUCKLAND,
Chief Secy. to the Govt. of Bengal.

NOTIFICATIONS.

ACCOUNTS.
LOANS.

Simla, the 9th July 1902.

No. 3785A.—In exercise of the powers conferred by sections 5 and 7 of the Local Authorities Loan Act 1879 (XI of 1879), the Governor-General in Council is pleased to direct that the following rule be substituted for rule 4 of the rules published with the Notification of the Government of India in the Finance and Commerce Department, No. 16, dated the 1st January 1889, as amended by the like Notification No. 4105, dated the 9th August 1889, namely:—

"4. (1) A loan shall not be raised except—

(*a*) for the construction or repair of works of public utility within the local limits of the area subject to the control of the Local Authority; or

(*b*) otherwise for the benefit of the inhabitants within those limits.

(2) The term of a loan shall not extend, except for very special reasons, over a period exceeding twenty years and, save as hereinafter otherwise provided by sub-rule (3), shall not extend over a period exceeding thirty years.

(3) In the case of the Rangoon Municipality, the term of a loan may, with the previous sanction of the Governor-General in Council, extend over a period not exceeding forty-four years."

ACCOUNTS AND FINANCE.
PUBLIC DEBT.

The 11th July 1902.

No. 3824-A.—The following draft of a Notification which it is proposed to make in exercise of the power conferred by section 14 of the Indian Securities Act, 1886 (XIII of 1886), is published, as required by section 15, sub-section (*1*) of the said Act, for the information of persons likely to be affected thereby, and notice is hereby given, as required by the said section 15, sub-section (*2*), that the draft will be taken into consideration by the Governor-General in Council on or after the twelfth day of August 1902.

2. Any objection or suggestion which may be received from any person with respect to the draft before the date fixed as aforesaid will be considered by the Governor-General in Council.

Draft Notification.

"In exercise of the power conferred by section 14 of the Indian Securities Act, 1886 (XIII of 1886), the Governor-General in Council is pleased to direct that the following rule be substituted for rule 4 of the rules published with the Resolution of the Government of India in the Finance and Commerce Department, No. 96, dated the 7th January 1888, namely:—

(1) Every endorsement purporting to be signed by a native female shall be attested by the signatures of two respectable witnesses.

(2) Such witnesses shall appear in person before—

(*a*) an officer in charge of a Treasury, or

(*b*) an officer in charge of a Sub-Treasury (not being a ministerial officer) empowered by law to take evidence, or

(*c*) a Justice of the Peace or Magistrate,

and shall testify to the genuineness of the endorsement.

(3) Such officer or Magistrate shall authenticate the examination of every such witnesses in the following form, namely:—

"Examined before me.

(Sd.) A. B.

Treasury Officer.

Sub-Treasury Officer.

Magistrate."

E. N. BAKER,

Offg. Secy. to the Govt. of India.

The Calcutta Gazette.

WEDNESDAY, JULY 16, 1902.

PART IB.

MUNICIPAL AND LOCAL.

NOTIFICATION.

No. 1260T M.—The 8th July 1902.—Whereas a notification No. 1533M, dated the 1st April 1902, was published at page 78, Part IB of the *Calcutta Gazette* of the 9th April 1902, declaring the intention of the Lieutenant-Governor to confirm the rules set forth below, which were framed by the Commissioners of the Chaibassa Municipality, in the district of Singhbhum, under section 3 of Act XX of 1887, for the protection of wild birds and game, and whereas no objection has been made to the proposal within one month from the date of publication of the aforesaid notification within the Municipality, it is hereby notified that the said rules are confirmed by the Lieutenant-Governor under clause 4 of the said section of the Act, and are published for general information under clause 5 of section 6 of the General Clauses Act, I of 1887:—

Singhbhum.

Rules.

1. "Wild birds" for the purposes of these rules shall include jungle-fowl, pea-fowl (excepting domesticated pea-fowl), pheasants, partridges, plover, jays, doves, egrets, golden oriel and green flycatchers.

2. The Local Government having by notification No. 1532M., dated the 1st April 1902, declared that the provisions of section 3, Act XX of 1887, shall apply to hares, the following rules will apply to that animal as well as to wild birds

3. The breeding season for the purposes of these rules shall extend from 15th March to the 1st of October.

4. Whoever during the breeding season has in his possession within the limits of the Municipality of Chaibassa any wild birds or hare recently killed or taken, or exposes for sale any such bird or animal, living or dead, shall be liable to a fine not exceeding Rs. 5 for each such bird or animal.

5. Whoever during the breeding season imports into the town the plumage of any kind of wild birds recently killed or taken, or the fur or skin of any hare recently killed or taken, shall be liable to a fine not exceeding Rs. 5 for the plumage of every such bird or the fur or skin of every such hare. In the case of a second conviction the fine may extend to Rs. 10 for each such bird or animal.

6. A reward not exceeding half the fine imposed and realised under rules 4 and 5 may be granted by the adjudicating Magistrate to any person who has afforded information leading to a conviction for a breach of any of the above rules.

E. W. COLLIN,
Offg. Secy. to the Govt. of Bengal.

NOTIFICATION.

No. 1288T.M.—The 9th July 1902.—It is hereby notified for general information that, in exercise of the power vested in him by section 139, clause 2 of the Bengal Local Self-Government Act, III of 1885, the Lieutenant-Governor confirms the additional bye-laws set forth below, which have been framed by the District Board of Saran under clause 1 of the said section:—

Saran.

1. Any person found committing a nuisance anywhere within the limits of a fair in which due sanitary arrangements are made by the District Board of Saran, except in such

places as are specially set apart for the purpose, shall, on conviction before a Magistrate, be liable to a fine not exceeding Rs. 10.

2. Any person erecting or constructing a private latrine within the limits of any fair in which public latrines are erected and other sanitary arrangements are made by the District Board of Saran without first obtaining a license to do so from the Chairman of the District Board or other officer deputed by him to issue such licenses shall, on conviction before a Magistrate, be liable to a fine not exceeding Rs. 20 for such offence.

3. Any person who may be found polluting any well reserved by the District Board of Saran for drinking purposes only by bathing his person or washing his garments on the platform within the limits of any fair in which sanitary arrangements are made by the District Board of Saran shall, on conviction before a Magistrate, be liable to a fine not exceeding Rs. 10 for each offence.

E. W. COLLIN,
Offg. Secy. to the Govt. of Bengal.

NOTIFICATION.

No. 1294T.M.—The 10th July 1902.—It is hereby notified that, under section 17 of the Bengal Municipal Act, III of 1884, as amended up to the 1st November 1896, the Lieutenant-Governor is pleased to appoint the following gentlemen to be Commissioners of the Daudnagar Municipality, in the district of Gaya:—

Gaya.

Maulvi Syed Abbas Ali.	Babu Mahadeo Lall.
„ Zaharul Hussain.	„ Paryag Lall.
„ Kazim Hussain.	„ Kanhaiya Lall.
„ Abdul Ghofoor.	„ Ghasita Lall.
Babu Bissesswar Puri.	„ Gajadhar Lall.
„ Poona Lall.	Munshi Lachmi Narayan.

2. The Lieutenant-Governor is also pleased to appoint, under section 23 of the Act, the Subdivisional Canal Officer to be the Chairman, *ex-officio*, of the above Municipality.

E. W. COLLIN,
Offg. Secy. to the Govt. of Bengal.

NOTIFICATION.

No. 1329T.M.—The 11th July 1902.—It is hereby notified for general information that the Notification No. 1454M., dated the 27th March 1902, published at page 71, Part IB of the *Calcutta Gazette* of the 2nd April 1902, declaring the intention of the Lieutenant-Governor to extend the provisions of sections 252, 275 and 276 of Part VI of the Bengal Municipal Act, III of 1884, as amended up to 1st November 1896, to the Noakhali Municipality, is cancelled.

Noakhali.

E. W. COLLIN,
Offg. Secy. to the Govt. of Bengal.

NOTIFICATION.

No. 1332T.M.—The 11th July 1902.—Whereas a notification No. 1530M., dated the 1st April 1902, was published at pages 77-78, Part IB of the *Calcutta Gazette* of the 9th idem, declaring the intention of the Lieutenant-Governor to revise the boundaries of the Naraingunj Municipality, in the district of Dacca, and whereas no valid objection has been raised to the proposal, it is hereby notified for general information that, in exercise of the power vested in the Local Government by section 9 (*c*) of the Bengal Municipal Act, III of 1884, as amended up to 1st November 1896, the Lieutenant-Governor is pleased to revise the boundaries of the said Municipality, so as to include within its limits portions of the villages of Godnail, Nobiganj and Gopichar.

Dacca.

2. The revised boundaries of the Municipality after inclusion of the above areas will be as follows:—

On the North.—A straight line drawn from the north-east corner of the Chasara railway station to the south-east corner of Bashi Dutta's tank at the corner of the village Tolla, thence skirting the villages Tolla and Kutabpore and the Jaluabari khal, north of the premises of Mr. S. M. Sarkies, thence in a straight line across the river passing north of Messrs. Mactavish and Company's premises to the north bank of the Nobiganj khal, including that khal up to the corner of Nobiganj village

On the South.—The Saidpore *khari*, the river Lakhya (south of a straight line drawn from the north-east corner of the Saidpore *khari* to the south-west corner of Madanganj, where the river Lakhya meets the river Dhaleswari) and the river Dhaleswari.

On the East.—The bank of the Madanganj khal skirting the villages Balia, Jeodhara, Feraji-Kandi, Puran Bandar, Usaria Bandar and part of Aima.

On the West.—The east side of the villages Ichdail and Mashdair (excluding Chamarpatty) and a straight line drawn from the north-west corner of Golachipa Moholla up to the end of Lakshmi Narayanjy's Akra road (near the south-east corner of Akra tank), thence proceeding in a straight line up to Baburail (including portion of Deobhog and the villages Deobhog, Goalbund and Cossipore and Cossipore khal, and thence in a straight line across the old bed of Burigunga to the west of Messrs. Georgiadi and Company's premises up to the cattle track of Gopichur and the village Gopichur (excluding the portion of Gopichur between the cattle track and the river Lakhya).

E. W. COLLIN,
Offg. Secy. to the Govt. of Bengal

NOTIFICATION.

No. 1347 T M.—The 11th July 1902.—It is hereby notified that, under section 19 of the Bengal Local Self-Government Act, III of 1885, Mr. E. H. Berthoud has been elected by the members of the Sitamarhi Local Board, in the district of Muzaffarpur, to be a member of the Muzaffarpur District Board, *vice* Mr. J. F. Jeffries, resigned.

Muzaffarpur.

E. W. COLLIN,
Offg. Secy. to the Govt. of Bengal.

NOTIFICATION.

No. 1349T.M.—The 11th July 1902.—It is hereby notified that the members of the Sitamarhi Local Board, in the district of Muzaffarpur, having at a meeting, under section 25 of the Bengal Local Self-Government Act, III of 1885, requested the Lieutenant-Governor to appoint a Chairman, the Lieutenant-Governor is pleased, under sections 25 and 29 of the Act, to appoint Mr. E. H. Berthoud to be the Chairman of that Local Board, *vice* Mr. J. F. Jeffries, resigned.

Muzaffarpur.

E. W. COLLIN,
Offg. Secy. to the Govt. of Bengal.

NOTIFICATION.

No. 1353T.M.—The 11th July 1902.—It is hereby notified for general information that, under rule 32 of the rules framed under section 138 (*a*) of the Bengal Local Self-Government Act, III of 1885, the Lieutenant-Governor is pleased to fix Saturday, the 23rd August 1902, as the date for holding an election, under section 19 of the Act, in thana Baraset, in the district of 24-Parganas, for the purpose of filling the vacancy in the representation of that thana on the Local Board of Baraset caused by the resignation of Mr. S. C. Biswas.

24-Parganas.

E. W. COLLIN,
Offg. Secy. to the Govt. of Bengal.

NOTIFICATION.

No. 1358T.M.—The 12th July 1902.—It is hereby notified that the members of the Alipur Local Board, in the district of Jalpaiguri, having at a meeting, under section 25 of the Bengal Local Self-Government Act, III of 1885, requested the Lieutenant-Governor to appoint a Chairman, the Lieutenant-Governor is pleased, under sections 25 and 29 of the Act, to appoint Mr. A. W. Stark to be the Chairman of that Local Board, *vice* Mr J. S. Davidson, resigned.

Jalpaiguri.

E. W. COLLIN,
Offg. Secy. to the Govt of Bengal.

NOTIFICATION.

No. 1360T.M.—The 12th July 1902.—It is hereby notified for general information that, under section 6 (*f*) of the Bengal Ferries Act, I of 1885, the Lieutenant-Governor is pleased to discontinue the public ferry, known as Chandraganj ferry, in the district of Noakhali.

Noakhali.

E. W. COLLIN,
Offg Secy. to the Govt. of Bengal.

NOTIFICATION.

No. 1363T.M.—The 12th July 1902.—It is hereby notified that, under section 59 of the Bengal Municipal Act, III of 1884, as modified up to 1st November 1896, the Lieutenant-Governor approves the election by the Commissioners of the Baduria Municipality, in the district of 24-Parganas, of Babu Upendro Nath Roy to be their Chairman, *vice*, Babu Ram Tarau Mitra, deceased.

24-Parganas.

E. W. COLLIN,
Offg Secy. to the Govt of Bengal.

NOTIFICATION.

No. 1365T.M.—The 12th July 1902.—It is hereby notified that, under sections 15 and 19 of the Bengal Local Self-Government Act, III of 1885, the Lieutenant-Governor is pleased to appoint the Cess Deputy Collector, Purnea, to be an *ex-officio* member of the Sadar Local Board, in the district of Purnea, *vice* Babu Jagdam Sahai, resigned.

Purnea.

E. W. COLLIN,
Offg. Secy to the Govt. of Bengal.

DECLARATION.

No. 1290T M.—The 10th July 1902.—Whereas it appears to the Lieutenant-Governor of Bengal that land is required to be taken up by Government at the expense of the District Board of Balasore for a public purpose, viz., for the Pachahara pound, in the village of Berpachahara, pargana Sunhat, zilla Balasore, it is hereby declared that for the above purpose a piece of land measuring, more or less, ·29 acre of standard measurement, is required. The land is bounded on the north by the cultivated land of Raghab Sahani, on the east by a road, on the south by a road, and on the west by a tank.

Balasore.

A plan of the land may be inspected in the office of the District Board, Balasore.

This declaration is made, under the provisions of section 6 of Act I of 1894, to all whom it may concern.

E. W. COLLIN,
Offg. Secy. to the Govt. of Benga..

DECLARATION.

No. 1783M.—The 15th July 1902.—Whereas it appears to the Lieutenant-Governor of Bengal that land is required to be taken up by Government at the expense of the Calcutta Municipality for a public purpose, viz., for a Gowkhana, it is hereby declared that for the above purpose a piece of land No. 73 Grey Street in Calcutta, district 24-Parganas, measuring, more or less, 6 bighas 16 cottahs and 7 chitaks, is required. The boundaries of the land are as follow:—

24-Parganas.

On the North—Grey Street;
On the South—The remaining portions of the premises;
On the East—Partly Bhalukpara Lane and partly the remaining portions of the premises; and
On the West—Dalimtola Lane.

A plan of the land may be inspected at the office of the Commissioners.

This declaration is made, under the provisions of section 6 of Act I of 1894, to all whom it may concern.

E. W. COLLIN,
Offg. Secy. to the Govt. of Bengal.

The Calcutta Gazette.

WEDNESDAY, JULY 16, 1902.

PART II

Advertisements.

[N. B.—Advertisements, Notices, &c., intended for insertion in this part of the Gazette cannot be received after Noon on Monday.]

LAND SALE NOTICES.

Advertisement of Sale.

NOTICE is hereby given that the proprietary right of Government, as specified in the conditions of sale below, to the undermentioned estates situated in the district of Midnapore, will be put up to sale at the Midnapore Collectorate on Friday, the 26th September 1902, corresponding with the 10th of Aswin 1309 B S. and 11th of Aswin 1310 A.S.

The purchasers will be subject to the following conditions of sale:—

Conditions of Sale.

1st.—Each estate to be sold to the highest bidder above the upset price, which will be fixed by the Collector at the time of sale. The purchasers of these estates will be considered as the proprietors of the estates, and the entire proprietary right of Government in such estates will be transferred to them, free of revenue.

2nd.—The sales to be subject to existing leases and to the rights conferred by the settlement proceedings and by the laws in force, and the purchasers to be bound to respect the rights of resident cultivators who have signed the schedule of assessment prepared by the revenue authorities.

3rd.—If the amount of purchase-money do not exceed Rs 100, the whole amount to be paid down at once.

4th.—If the amount of purchase-money exceed Rs. 100, one-fourth of the amount bid to be immediately deposited. If the balance be not paid by noon of the fifteenth day after the sale, reckoning the day of sale as one, or if that day be a close holiday, then by noon of the first succeeding office day, the sale is to be cancelled (the sum deposited being forfeited to Government), and the estate to be again put up to sale at the risk of the defaulting purchasers, after issue of advertisement, as in the case of original sale.

Number on the district roll.	Name of estate and pargana.	Approximate area in acres	Government revenue assessed.	Remarks.
1	2	3	4	5
2706	Hiradharpur, pargana Chandrakona ...	A. R. P. 0 0 7	Rs. A. P.	Both these estates will be sold revenue free.
2707	Ditto, ditto ,,	0 0 21	.....	

Midnapore Collectorate, the 18th June 1902.

H. Luson, Collector.

Notification of Sale.

NOTICE is hereby given, under sections 6 and 13, Act XI of 1859, read with Act VII (B.C.) of 1868, that the undermentioned tenures or shares of tenures in estate Kothdesh, in the district of Puri, will be put up for sale at the office of the Collector of that district on the 28th July 1902 at 12 A.M. for arrears of revenue and other demands which by above laws are realizable as arrears of land revenue.

N.B.—When in columns 5, 7 and 9 of the appended statement it is stated that only a share is to be sold, it is to be understood that a separate account is kept for that share, and that all other shares besides those specified will be excluded from the sale.

Number of tenure.	Name of tenure, mahal, and pargana.	Sadar jama of whole tenure.		Whether the whole tenure is to be sold.	If only a share is to be sold, specification of such share or shares. All other shares besides that specified are excluded from sale.	Names of proprietors of property to be sold.	If only a share is to be sold, the sadar jama of such share.		If the whole tenure is to be sold, the arrears due from it.		If only a share is to be sold, the arrears due from it.	
		Rent.	Cesses.				Rent.	Cesses.	Rent.	Cesses.	Rent.	Cesses.
1	2	3		4	5	6	7		8		9	
67 68	Mauza Bhairpur Makadami, taluk Kothdesh, thana Pipli, pargana Kothdesh.	Rs. 581	Rs. A. 38 7	The whole	.....	Madhu Nayak and others.	Rs. A. P.	Rs. A. P.	Rs. A. P. 35 5 0	Rs. A. P. 2 8 9	Rs. A. P.	Rs. A. P. .....
86 87	Biswarpur ditto, thana Gope, pargana Antarodh.	631	44 9	Ditto ...	.....	Durgaprasad Bhagat and others.	.....	.....	157 0 0	11 2 3	.....	.....
90 91	Biswanathpur ditto, thana Pipli, pargana Kothdesh.	1,299	85 3	.....	6p. 7g. 1k. 2k. ...	Gadadhar Pani and others.	517 3 8	33 14 10	.....	.....	107 3 4	7 8 2
125 138	Danua, pargana ditto, thana ditto.	1,243	71 15	.....	14p. 15g. ...	Durgaprasad Bhagat and others.	1,164 5 3	66 5 1	.....	.....	45 3 2	4 8 11
141 144	Garadi Punchan, ditto, pargana ditto.	880	52 12	The whole	.....	Chandhury Kritibas Das and others.	.....	.....	137 8 0	8 3 11	.....	.....
158 161	Hansapada, pargana ditto, thana ditto.	1,105	57 12	Ditto ...	.....	Durgaprasad Bhagat and others.	.....	.....	293 0 0	14 7 0	.....	.....
246 253	Nariso ditto, thana Gop, pargana Antarodh.	1,118	86 3	.....	8p. 15g. 1k. 29d.	Baikuntha Sarangi and others.	613 1 0	47 5 2	.....	.....	19 13 0	1 8 6
266 274	Pampalo ditto, thana ditto, pargana Kothdesh.	1,036	66 0	.....	13p. 2k. 1k. 12b.	Cha. Chandrasikhar Das and others.	779 1 5	49 10 5	... .	.....	284 12 8	20 11 3
266 274	Mauza Pampalo Makadami, taluk Kothdesh, thana Pipli, pargana Kothdesh.	1,036	66 0	.....	3p. 1g. 1k. 1k. 4b.	Sambhunath Das.	198 10 2	12 10 2	.....	...	99 5 1	6 5 1
291 299	Ratilo, pargana ditto, thana ditto.	921	51 14	.....	12p. 5g.	Durgaprasad Bhagat and others.	705 2 3	39 11 6	.....	.....	176 9 6	9 14 10
315 323	Sarkana ditto, thana ditto, pargana ditto.	1,327	101 2	The whole	.....	Parasuram Mahapatra and others.	.....	.....	345 0 3	26 2 6	.....	.....
331 339	Saulakhal ditto, thana ditto, pargana ditto.	485	34 0	.....	13p. 7d.	Durgaprasad Bhagat and others	304 5 8	27 9 2	.....	.....	33 2 9	7 3 2
334 342	Talatania ditto, pargana ditto, thana ditto.	534	41 1	.....	3p. 5g.	Keshab Panda and others.	425 3 6	32 11 7	.....	.....	56 14 9	13 11 4
338 346	Tarahoi Sasan, pargana ditto, thana ditto.	748	40 6	The whole	.....	Mahant Raghunandan Ramanuj Das and others.	.....	.....	23 4 9	1 4 1	.....	.....
348 355	Turuntira ditto, pargana Kalijori.	626	48 6	.....	14p. 2g. 2k. ...	Purutam Sahoo and others.	552 10 3	37 6 6	.....	. .	276 5 1	18 11 3
73 74	Bhiligram ditto, thana Gop, pargana Antarodh.	622	43 5	. .	9p. 5g. 3k. 12d.	Madhusudan Mahaswar.	89 1 9	6 3 3	... ..	..	44 8 11	3 1 3
277 285	Prataprudrapur ditto, thana Pipli, pargana Kothdesh.	1,446	100 3	.....	7p. 1g. 3k. ...	Mahant Raghunandan Ramanuj Das.	640 8 11	44 6 1	. .	.....	.....	1 10 7

Puri Collectorate, the 14th June 1902.

A. GARRETT, Collector.

Notification B.

NOTICE is hereby given, under sections 5 and 13, Act XI of 1859, that unless the arrears mentioned below are paid on or before the next latest date of payment, viz., the 28th June 1903, the undermentioned estates or shares of estates in the district of Tippera will be put up for sale at the office of the Collector of that district on the 26th September 1902 at 12 o'clock for the said arrears.

When in columns 5, 7 and 9 of the appended statement it is stated that only a share is to be sold, it is to be understood that a separate account is kept for that share.

Tauzi No.	Name of mahal and pargana.	Sadar jama of whole estate.	Whether the whole estate is to be sold.	If only a share is to be sold, specification of such share or shares.	Names of proprietors of property to be sold.	If only a share is to be sold, the sadar jama of such share.	If the whole estate is to be sold, the arrears due from it.	If only a share is to be sold, the arrears due from it.	Nature and amount of demand for which to be sold.
1	2	3	4	5	6	7	8	9	10
1925	Pargana Uttar Sahapur chur near Nagarer Kandi, No. 211.	Rs. A. P. 1,206 10 9	Whole ...	.....	Ishan Chandra Datta and others.	Rs. A. P.	Rs. A. P 202 9 4	Rs. A. P.	Rs. A. P. 202 9 4

Tippera Collectorate the 29th May 1902.

H. W. SCROOPE, Offg. Collector.

Advertisement of Sale.

NOTICE is hereby given that the undermentioned plots of land, no longer required by Government, situated along the East Coast (now Bengal-Nagpur) Railway, Puri Branch, in the district of Puri, will be put up to sale at 12 o'clock on the 4th day of August 1902, corresponding with the 20th Sraban 1309 Fasli, at the Puri station.

The purchasers of the several plots of land will be subject to the following conditions:—

1st.—The purchasers will have no power to make any excavations on the land nearer than 15 feet from the railway fencing, or plough the lands closer than 3 feet from its foundation.

2nd.—If the amount of purchase-money does not exceed Rs. 100, the whole amount must be paid down at once.

3rd.—If the amount of purchase-money exceed Rs. 100, one-fourth of the amount must be immediately deposited. If the balance be not paid by noon of the fifteenth day after the sale, reckoning the day of sale as one, or if that day be a close holiday, then by noon of the first succeeding office day, the sale shall be cancelled, the sum deposited being forfeited to Government, and the lot again put up for sale at the risk of the defaulting purchaser, after issue of advertisement, as in the case of original sale.

4th.—The plots of land will be sold revenue-free to the highest bidders.

5th.—The purchasers shall be put in possession on receipt by the District Collector of the orders of the Board confirming the sale.

Consecutive lot No.	Name of district.	Pargana and mauza.	Number of mile on which land is situate.	Situated on which side of the railway.	Approximate area of lot in bighas and in acres.		Land excluded from sale from each lot.		Commencement and termination of lot.	Boundary of lot.
					B. K. CH.	A. R. P.	Reasons for exclusion.	A. R. P.		
1	2	3	4	5	6		7		8	9
										(*Lot No. 1.*)
1	Puri ...	Pargana Rahang, ma. Somong.	At mile No 24.	East of the Railway line.	.....	1 3 30	..	.. ...	Lot Nos. 1 to 4 ...	*North*—Somong Bharathipur, tanki bajapti land of Hina Biswal. *South*—Kasiharipur. The land to be relinquished in the 25th mile. *East*—Somong Bharathipur, waste land of Bhagban Ramanuj Das and Durga Charan Jagadeb Ray; raiyati land of Apartia Bhoi and lakhraj bajapti land of Balabhadra Prusti and Bhagaban Raitsing. *West*—Somong Bharathipur, railway line.
										(*Lot No. 2.*)
2	Do. ...	Ditto ...	Ditto	West of the Railway line.	.....	4 3 18	Required temporarily by P. W. D. for brickfield.	4 3 18	.. .	*North*—Somong Bharathipur, lakhraj bajapti land of Ajib Sundra and Desa Baral and a *jora* (water channel) of Radyanath Brahmachari. *South*—Somong Bharathipur. The land to be relinquished in the 23th mile. *East*—Somong Bharathipur, railway line. *West*—Somong Bharathipur, tanki jaslri land of Mahadeb Mahapatra and Narain Mahapatra; tanki bajapt land of Radyanath Brahmachari and tanki bahal land of Gadadhar Brahmachari.
										(*Lot No. 3.*)
3	Do. ..	Pargana Rahang, ma. Kasiharipur.	At mile No. 25.	East of the Railway line.	.....	3 2 39	.....	.....	.....	*North*—Kasiharipur and Somong Bharathipur. The land to be relinquished in the 25th mile. *South*—Kasiharipur, lakhraj bajapti land of Durga Charan Bharathi. *East*—Kasiharipur embankment, tanki bahal land of Siba Prusti and Durga Charan Bharathi. *West*—Kasiharipur, railway line.
										(*Lot No. 4.*)
4	Do. ...	Ditto ...	Ditto	West of the Railway line.	...	11 1 24	Required temporarily by P. W. D. for brickfield.	1 1 14	.	*North*—Somong Bharathipur. The land to be relinquished in the 24th mile. *South*—Kasinaripur, lakhraj bajapti land of Balunkeswar Deb, Siba Prusti and Maguni Raut. *East*—Kasiharipur, railway line. *West*—Kasiharipur, raiyati land of Gobind Padhan and Abhi Jena; lakhraj bajapti land of Siba Prusti and Brundu Raut and tanki bahal land of Siba Prusti.
		Total ...	.....	.....	.....	21 3 21	...	6 0 32		

Puri Collectorate, the 11th June 1902.

A. GARRETT, Collector.

Notification of Sale.

NOTICE is hereby given, under sections 5 and 13, Act XI of 1859, read with Act VII (B C.) of 1868, that unless the arrears mentioned below are paid on or before the next latest date of payment, viz., the 28th April 1902, the undermentioned tenure or shares of tenure in estate Kothdesh, in the district of Puri, will be put up for sale at the office of the Collector of that district on the 28th July 1902 at 12 o'clock noon for the arrear.

When in columns 5, 7 and 9 of the appended statement it is stated that only a share is to be sold, it is to be understood that a separate account is kept for that share, and that the other share or shares in the tenure are excluded from the sale.

No. of tenure.	Name of tenure, mahal and pargana.	Sadar jama of whole tenure.		Whether the whole tenure is to be sold.	If only a share is to be sold, specification of such share or shares. All other shares besides that specified are excluded from sale.	Names of proprietors of property to be sold.	If only a share is to be sold, the sadar jama of such share.		If the whole tenure is to be sold, the arrears due from it.		If only a share is to be sold, the arrears due from it.		Nature and amount of demand for which to be sold.
		Rent.	Cesses.				Rent.	Cesses.	Rent.	Cesses.	Rent.	Cesses.	
1	2	3	4	5	6	7	8	9	10	11	12	13	14
90/91	Mauza Biswanathpur, taluk Kothdesh, thana Pipli, pargana Kothdesh.	Rs. 1,299	Rs. a. 85 3	.....	6p. 7g. 1k. 2kr.	Gadadher Pany and others.	Rs. a. p. 517 3 8	Rs. a. p. 33 14 10	.....	.....	Rs. a. a. 258 9 10	Rs. a. p. 16 15 5	.....

Puri Collectorate, the 17th April 1902

R. C. BANERJEE, Deputy Collector in charge.

Notice of Lease of Waste Lands in the Sunderbans, under Rule 19, Section 11 of the Waste Lands Manual, 1898.

NOTICE is hereby given that the lease of the land specified in the Schedule hereto annexed, and of which the plan is open to inspection at the office of the Commissioner of the Sunderbans, has been applied for by Purnendu Narain Singha, and will be sold at 12 o'clock noon on the 2nd of October 1902, Thursday, at the Sunderbans Commissioner's office at Alipur, unless meantime the sale is stopped or postponed in consequence of claims or objection under Act XXIII of 1863 (to provide for the adjudication of claims to waste lands), or owing to any other cause.

2. The lease of the land will be granted subject to the conditions which are specified below, as well as to the general terms annexed to the Rules for the Sale of Leases of Waste Lands in the Sunderbans of the 24-Parganas, Khulna, and Backergunge, dated 12th November 1879.

Conditions.

That the land shall be subject to all existing rights of way and water and other easements.

That the right of using all streams and channels in any way navigable shall be reserved to the public, as also the use of a towpath not less than 25 feet in width on each side of every such stream and channel.

That no charge will be made for wood and timber standing on the land at the time it is leased, nor for any wood which may be cut and burnt to effect clearances, or which may be used on the land. But for wood and timber exported for sale a duty shall be levied at such rate and in such manner as may, from time to time, be prescribed by Government.

That the Government reserves to itself the right to all minerals on the land, together with such rights of way and other reasonable facilities as may be requisite for working, getting, and carrying away such minerals. It also retains its proprietary right in the land, and only confers on the lessee an occupancy right, which shall be hereditary and transferable.

Schedule.

Number of lot.	District, subdivision and thana.	Area.	Boundaries.
Lot No. 141	24-Parganas, Basirhat, Hasnabad.	Bighas. 14,916	*North*—By a portion of the Poonjali river. *East*—By a portion of the Roymangal river. *South*—By the Pagna river. *West*—By a portion of the Sharsha river and by a portion of the Poonjali river. All the above boundaries are as shown in Mr. Sunderbans Commissioner Sunder's map of season 1901-1902.

Alipur, the 27th June 1902.

D. SUNDER, Commissioner in the Sunderbans, Bengal.

Notification A.

NOTICE is hereby given, under sections 6 and 13, Act XI of 1859, that the undermentioned estates and shares of estates in the district of Puri will be put up for sale at the office of the Collector of that district on the 21st July 1902 at 12 noon for arrears of revenue and other demands which by law are realisable as arrears of land revenue.

When in columns 5, 7, and 9 of the appended statement it is stated that only a share is to be sold, a separate account is kept for that share, and the other shares in the estate are excluded from the sale.

Tauzi No.	Name of mahal and pargana.	Sadar jama of whole estate.	Whether the whole estate is to be sold.	If only a share is to be sold, specification of such share or shares (all other shares besides that specified are excluded from the sale).	Names of proprietors of property to be sold.	If only a share is to be sold, the sadar jama of such share.	If the whole estate is to be sold, the arrears due from it.	If only a share is to be sold, the arrears due from it.
1	2	3	4	5	6	7	8	9
		Rs. A. P.				Rs. A. P.	Rs. A. P.	Rs. A. P.
785	Kalla Rupas, pargana Athies.	1,649 6 0	.....	9p. 6g. 2k. 2c. ...	Trilochan Chaudhuri and others.	985 5 0	.....	91 3 11½
2								
228	Taluk Sohanpur, pargana Damarkhand.	708 0 0	Whole ...	.....	Balaram Bhramarabari Rai.	.....	153 15 11½	.....
63								
2	Taluk Pursotumpur, pargana Kotrahang.	1,216 0 0	.....	12 *pans*	Gopi Nath Das	912 0 0	.....	255 15 11½
257	Taluk Delang, pargana Lembai.	43,564 0 0	Whole ...	.....	Raja Mukund Deb ...	.....	15,382 0 0	.....
147	Mauza Herakristapur, pargana Rahang.	2,143 0 0	Do. ...	.....	Bhikari Misra and others	.....	1,071 15 11½	.....

Puri Collectorate, the 12th June 1902.

A. GARRETT, Collector.

APPENDIX XXX.

Advertisement of Sale.

NOTICE is hereby given that the undermentioned plots of land no longer required by Government, situated along the main line of the East Coast (now Bengal-Nagpur) Railway, in the district of Puri, will be put up to sale at 12 o'clock on 8th day of August 1902, corresponding with the 24th Sraban 1309 Fasli at the Puri station.

The purchasers of the several plots of land will be subject to the following conditions:—

1st.—The purchasers will have no power to make any excavations on the land nearer than 15 feet from the railway fencing, or plough the land closer than three feet from its foundation.

2nd.—If the amount of purchase-money does not exceed Rs. 100, the whole amount must be paid down at once.

3rd.—If the amount of purchase-money exceed Rs. 100, one-fourth of the amount must be immediately deposited. If the balance be not paid by noon of the fifteenth day after the sale, reckoning the day of sale as one, or if that day be a close holiday, then by noon of the first succeeding office day, the sale shall be cancelled, the sum deposited being forfeited to Government, and the lot again put up for sale at the risk of the defaulting purchaser after issue of advertisement as in the case of original sale.

4th.—The plots of land will be sold revenue-free to the highest bidders.

5th.—The purchasers shall be put in possession on receipt by the District Collector of the orders of the Board confirming the sale.

Consecutive lot number.	Name of district.	Pargana and mauza.	Number of mile on which land is situate.	Situated on which side of the Railway.	Approximate area of lot in bighas and acres.		Land excluded from sale from each lot.		Commencement and termination of lot.	Boundary of lot.
					B. K. G.	A. R. P.	Reasons for exclusion.	A. R. P.		
1	2	3	4	5	6		7		8	9
1	Puri ...	Mauza Nayagur, zilla Rameswar, kila Khurda, district Puri.	449	West of the Railway line.	.....	2 0 10	.....	.....	Lots Nos. 1 and 2.	Lot No. 1. *North.*—Markand Patra's garden and Government waste land. *South.*—Mulikhan's garden. *East.*—Cultivated land of Pandab Srichamidan and Bhizar Khan. *West.*—Cultivated land of Usir Khan, Shaik Fakir, and Pandab Srichandan.
2	Do. ...	Mauza Taladihi, zilla Kuhuri, kila Khurda, district Puri.	449	East of the Railway line.	.....	2 0 10	.....	.....	.....	Lot No. 2. *North.*—Chanda Santra's land. *South.*—Road. *East.*—Road. *West.*—Chanda Santra's land.

Puri, the 16th June 1902.

A. GARRETT, Collector.

NOTICE is hereby given, under sections 6 and 13, Act XI of 1859, that the undermentioned estates or shares of estates in the district of Bhagalpur will be put up for sale at the office of the Collector of that district on the 4th August 1902 for arrears of revenue and other demands which by law are realisable as arrears of land revenue.

When in columns 5, 7, and 9 of the appended statement it is stated that only a share is to be sold, it is to be understood that a separate account is kept for that share. All other shares besides that specified will be excluded from the sale.

Tauzi No.	Name of estate, thana or pargana.	Sadar jama of whole estate.	Whether the whole estate is to be sold.	If only a share is to be sold, specification of such share or shares.	Names of proprietors of property to be sold.	If only a share is to be sold, the sadar jama of such share.	If the whole estate is to be sold, the arrears due from it.	If only a share is to be sold, the share due from it.
1	2	3	4	5	6	7	8	9
833	Makrohi, pargana Narodegar, thana Supoul.	Rs. A. P. 3,768 0 0	.....	Residuary ijmali share— A. G. C. KT. Bishenpur ... ... 10 13 1 1 Beldra ... ... 5 6 2 2 Bharha ... ... 16 0 0 0 Piprasi ... ... } 16 0 0 0 Badal Kalapatti ... } Dubiahi ... ... 11 8 0 0 Debi Patti ... ... 16 0 0 0 Dina Patti ... ... 16 0 0 0 Gamharpur 16 0 0 0	Raja Surendra Narain Singh, &c. Durga Narain Singh. Bishunman Singh, &c. Ditto. Ditto. Rai Babu Narendra Narain Singh, &c. Ditto. Bishunman Singh, &c.	Rs. A. P. 1,520 10 0	.....	Rs. A. P. 32 15 0
3558	Mohanpur Nowhatta, pargana Kabkhand, thana Bongong.	865 12 0		Residuary ijmali share— 16 annas Mohanpur Kalan, asli with dakhli, 3a. 3g. 1c. 1kt. in Nowhatta.	Mardan Ali Kha and others.	632 9 0	.....	24 7 0

Bhagalpur Collector's Office, the 3rd July 1902.

A MARR, *for* Collector.

Statement of the Affairs of the Bank of Bengal for the week ending 8th July 1902.

LIABILITIES.

	Rs.	A.	P.
Capital paid up	2,00,00,000	0	0
Reserve Fund	1,14,00,000	0	0
Public Deposits at Head Office ... ... Rs. 94,71,117 10 0			
Ditto ditto at Branches „ 1,27,08,371 7 7	2,21,79,489	1	7
Other Deposits at Head Office and Branches ...	8,43,62,929	8	0
Bank Post Bills, &c.	4,54,117	13	5
Sundries	16,19,740	3	8
Rupees ...	14,00,16,276	10	8

ASSETS.

	Rs.	A.	P.
Government securities	1,36,36,075	0	0
Other authorised investments	70,04,855	0	0
Loans on Government and other authorised securities	2,46,67,860	5	9
Accounts of credit on ditto ditto	1,54,79,755	3	11
Bills discounted and purchased	2,04,19,994	3	10
Balances with other Banks	11,69,110	9	11
Bullion	.....		
Dead Stock	16,07,711	15	5
Stamps	13,509	2	2
Sundries	12,66,777	6	0
	8,52,65,648	15	0
Cash & Currency Notes at Head Office* ... Rs. 2,68,48,552 6 4			
Cash & Currency Notes at Branches† ... „ 2,79,02,075 5 4	5,47,50,627	11	8
Rupees ...	14,00,16,276	10	8

* Includes Sovs. and ½ Sovs. value Rs. 82,035 0 0
† Do. do. do. „ 1,25,482 8 0
Rs. 2,07,517 8 0

BANK OF BENGAL,
Calcutta, the 10th July 1902.

E. J. BIRCH, Chief Accountant.
Rate for Demand Loans 3 per cent.
Percentage 50·40.

By order of the Directors,
W. D. CRUICKSHANK,
Secretary and Treasurer.

(371—1)

Pure Sulphate of Quinine.

MANUFACTURED AT THE BENGAL GOVERNMENT CINCHONA PLANTATION.

FROM 1st April 1902 the price of this quinine will be as follows:—

1 Pound tin	Rs. 17,	or, post free,	Rs. 17-8
½ " "	8-8 "	" "	8-14.
¼ " "	4-4 "	" "	4-10.

Analysis shows this quinine to be of the purest manufacture; and it is guaranteed to be free from wilful mixture with the inferior alkaloids, cinchonine and cinchonidine. It is for sale only to Government officers, and only for cash, and may be had from the Superintendent, Botanic Garden, Sibpur, near Calcutta.

Cinchona Febrifuge.

Cinchona Febrifuge can be purchased by all Government officers and by any one taking *six pounds* and upwards at a time from the Superintendent, Botanic Garden, Calcutta, for cash only at the following rates—

	Government officers.	General public.	Postage extra.
	Rs. A.	Rs.	As.
1 Pound tin ...	10 0	12	8
½ " " ...	5 0	6	6
¼ " " ...	2 8	3	4

RAJENDRA CHANDRA CHUCKERBUTTY, B.L., intends to be enrolled as a Vakil, High Court.

(368—4—919)

LALIT MOHAN GHOSE, M.A., B.L., intends to be enrolled as a Vakil of the High Court, Calcutta.

(367—4—918)

BABU NIKHIL NATH ROY, B.L., Pleador, District Judge's Court, Murshidabad, intends to be enrolled as Vakil, Calcutta High Court. (322—4—393)

WANTED a Cashier for the Ratan Court of Wards' office on a salary of Rs. 25 per month. None need apply who has no experience of the Court of Wards' work. The successful candidate will have to furnish security of Rs. 500 in cash or in Government securities.

Applications will be received by the undersigned up to 31st July 1902.

F. J. JEFFRIES,
Collector of Monghyr.
S. MOHAMAD,
Manager, Ratan Ward's Estate, Monghyr.

Monghyr, the 2nd July 1902. (347—2)

WANTED at once a permanent Head Clerk for the District Engineer's Office, Palamau. Pay Rs. 40. Must have experience of work in an Executive or District Engineer's Office. Apply stating full particulars of past service and enclosing copies of testimonials to the Chairman, District Board, Palamau, Daltonganj Post Office.

SARAT CH. SEN GUPTA,
for Chairman, District Board.

Palamau, the 2nd July 1902. (349-2)

WANTED a Draughtsman for about three months at Chaibassa, Singhbhum District. Pay Rs. 30 per month. Apply at once with copies of testimonials to the undersigned.

H. H. HAINES,
Deputy Conservator of Forests.
Singhbhum Division, Chaibassa.

Wanted

BY the District Board of Muzaffarpur a Sub-Inspector of Schools on a monthly salary of Rs 50, exclusive of travelling allowance, not exceeding Rs. 360 a year, admissible under the Civil Service Regulations. Only candidates qualified under Government Notifications Nos. 486T.—G., 105T.—G., and 658, dated the 2nd September 1893, 24th May 1899, and 8th February 1901, respectively, need apply. Applications with copies of the requisite certificates will be received by the undersigned up to 30th July 1902. The selected candidate will be on probation for six months.

E. V. LEVINGE, Chairman, District Board

Muzaffarpur District Board's Office, the 8th July 1902. (375—2)

Wanted

A SUB-INSPECTOR OF SCHOOLS under the District Board of Midnapore on a salary of Rs. 50 a month besides travelling allowance.

Applicants must be qualified under the rules prescribed by the Government of Bengal in Notification No. 486T.G., dated the 2nd September 1893.

Applications with copies of testimonials will be received by the undersigned up to the 26th instant.

H. LUSON, Chairman.

District Board, Midnapore, the 12th July 1902. (380—2)

WANTED at once an Overseer qualified under the rules. Pay Rs. 60 per mensem. Engagement certain for eight months. Experience in building construction essential. Apply, stating full particulars of past service and enclosing copies of testimonials, to the

Chairman, District Board, Palamau.

Daltonganj, the 9th July 1902. (377—1)

WANTED for three months an experienced Overseer for the Rampur Boalia Municipality on a salary of Rs. 50 and a horse allowance of Rs. 10 per month. Applications will be received up to 27th instant.

R. C. ROY, Vice-Chairman.

Rampur Boalia Municipality, the 10th July 1902. (381—2)

WANTED a Sub-Inspector of Schools, Muhammadan preferred, for the District Board of Murshidabad, Berhampore. Salary Rs. 50, exclusive of allowances. Ability to ride indispensable. Applications stating age with copies of testimonials will be received up to the 20th of July.

CHARU KRISHNA MAJUMDAR, Vice-Chairman.

Murshidabad District Board's Office, Berhampore, the 10th July 1902. (378—2)

Notice.

WANTED at once a Muhammadan teacher for a Government Zilla School on Rs. 20 a month. None need apply who has not at least passed the Entrance Examination and has not fair knowledge in Bengali.

RADHA NATH RAI,
Inspector of Schools, Burdwan Division.

Chinsurah, the 4th July 1902.

Notice.

WANTED from about 1st December 1902 for the Hooghly Collectorate a Sharistadar on a monthly salary of Rs. 120 rising to Rs. 200 by a biennial increment of Rs. 8.

None without previous experience need apply. Applications stating nature of experience and accompanied by copies of testimonials should reach the Collector not later than the 30th September.

R. C. HAMILTON, Collector.

Hooghly Collectorate, the 10th July 1902.

Notice.

SEALED TENDERS for the supply to the Bombay Dockyard by 8th of September 1902 of 5,000 tons Indian steam coal will be received by the Director of the Royal Indian Marine at his office in the Royal Indian Marine Dockyard, Bombay, up to 1 P.M. gunfire of Monday, the 21st July 1902, after which hour no tender will be received.

2. The coal must be fresh and unscreened, and will be taken delivery of by weighment overside in Bombay Harbour from the vessel bringing it from Calcutta. Any tender making stipulations not provided for either in this notice or in the printed tender form will be summarily rejected.

3. Tenders must be accompanied by a Bank of Bombay or Bengal receipt for the amount to be deposited, or by Government Loan Paper duly endorsed to the Accountant-General, Bombay, and forwarded by registered post. Tenders delivered in any other way will not be received. Informal tenders will be rejected, and no reason assigned for the rejection of any tender. The Director of the Royal Indian Marine does not bind himself to accept the lowest or any tender.

4. Printed tender forms and any information in connection with the contract can be obtained in this Office or from the Deputy Director of the Royal Indian Marine, Kidderpore Dockyard, Calcutta

5. Tenders to be superscribed "Tender for the supply of Indian steam coal to the Bombay Dockyard."

GEORGE WILSON,
Offg. Director of the Royal Indian Marine.
R. I. M. Dockyard, Calcutta, the 4th July 1902.

Notice.

IN continuation of this office notice dated 12th March 1902, published in the *Calcutta Gazette* of the 19th March 1902, Part II, page 314, it is hereby notified for general information, under section 33 of Act IV (B.C.) of 1887, the following rates will be charged for hire of the cranes at the Chittagong Jetties for day and night work:—

Rules and rates for day work.

It is optional with a vessel whether she uses her own or the jetty cranes. If she uses the latter, the charges will be as follows:—

	Rs.	A.
For each 35-cwt. crane per day ...	5	0
Ditto 35 ,, ,, per half day	2	8
Ditto 5-ton ,, per day ...	10	0
Ditto 5 ,, ,, per half day	5	0

(2) Day to be from 6 A.M. to 6 P.M.; half day to be from 6 A.M. to noon or noon to 6 P.M.

(3) Any part of a day less than a half will be charged as a half day.

(4) On a ship applying for cranes, if they are supplied, payment must be made for at least half-a-day whether they are used or not.

(5) Should the application have been for the first half only of a day and the crane be required for a longer time, another application must be made through the Jetty Superintendent at least one hour before the expiration of the first half of the day.

(6) Application for cranes required for the whole or half of the following day to be made by 4 P.M. to the Jetty Superintendent.

(7) Should cranes for which application has been made for the whole day not be required for more than the first half day, written notice must be given to the Jetty Superintendent at least one hour previous to the end of the half day, or full day will be charged for.

(8) All applications for cranes to be in regular book forms with counterfoils, and to be signed by the ship's officer on duty, showing number of cranes required, from what time and for how long.

For night work.

Vessels berthed alongside the jetty when working at night shall pay the following charges, which include use of cranes, electric light on jetty and in vessel's holds as far as available—

	Rs.
From 7 P.M. to 1 A.M.	100
For any time in excess of the above six hours up to 6 A.M.	50

R. S. GREENSHIELDS,
Chairman, Port Commissioners.
Chittagong, the 27th June 1902. (344—3)

Notice.

NOTICE is hereby given that Probate of the Will of Jane Maria Henderson, late of 1, 4, 7, and 8 Dacre's Lane, Calcutta, having been granted by the High Court, Calcutta, to Hector M. Webster and Ernest Acton, all persons having claims against the estate of the deceased are hereby required to send a statement of their claims to the undersigned on or before the 31st day of July 1902, at the expiration of which date all such claims will be settled and adjusted and the estate distributed among the beneficiaries, and no claim received subsequent to the adjustment will be recognised.

H. M. WEBSTER,
E. ACTON, } Executors.

Calcutta, No. 3 Wellesley Place, the 27th day of June 1902. (328—1—921)

Chota Nagpur Tea Company, Limited.

NOTICE is hereby given that at Extraordinary General Meetings of the Shareholders of the Chota Nagpur Tea Company, Limited, held at the Registered Office of the Company, No. 20 Strand Road, Calcutta, on the 11th day of June 1902 and the 4th day of July 1902, respectively, the following special resolutions were passed:—

1. That the Company be wound up voluntarily, and that Mr. Gerald Kingsley, of 20 Strand Road, Calcutta, be and he is hereby appointed Liquidator for the purpose of such winding up.

2. That the said Liquidator be and he is hereby authorised, pursuant to section 204 of the Indian Companies Act, 1882, to sell to the Assam Frontier Tea Company, Limited, all the lands, tea estates and other property of the Company, together with all assets of the Company (save cash in hand, the proceeds of the 1901 crop, recoverable outstandings, and new and unissued stores) as on and from the 1st day of January 1902, at the price of £5,000, to be paid and satisfied in fully paid £10 preference and ordinary shares of the said Assam Frontier Tea Company, Limited, the said shares to be allotted to the Shareholders of this Company on the basis of one preference and one ordinary share for every three shares held by them in this Company, and so that in the case of odd shares for which the allotment cannot be made the Liquidator shall be at liberty to sell the same at the price of Rs. 80 each, to enter into all necessary contracts and deeds for effecting and completing the said sale and transfer upon such terms and conditions and generally in such manner as to the Liquidator may seem fit.

3. That the remuneration of the said Liquidator in the said winding up be the sum of Rs. 250.

SHAW, WALLACE & Co., Managing Agents.
Calcutta, the 4th July 1902. (351—2—922)

Currency Notes.

THE following Currency Notes of the Calcutta Circle are stated to have been destroyed, and payment of their value has been claimed by the person whose name is placed against the numbers. Any other person claiming a right to them is warned to communicate at once with the undersigned:—

Notes wholly lost.

Register No.	No. of Notes.	Value.	Name of claimant.
	O/97 60746	Rs. 100	
	,, 42420	100	
	,, 58097	100	
W334 of 1881	,, 56116	100	Nocoor Krishna Mukerjee, Jansi, Serampore.
	,, 54809	100	
	,, 56115	100	
	,, 35039	100	
	,, 29724	100	
	,, 29725	100	
	,, 41853	100	

FRED. BREWIN, Assistant Comptroller-General, in charge Paper Currency.

Paper Currency Office, the 12th July 1902.

Bank of Bengal.

NOTICE.

THE Annual General Meeting of the Proprietors and Shareholders of the Bank of Bengal will be held at the Bank on Monday, the 4th proximo, at 10-15 A.M., for the transaction of the following business:—

I.—To receive the Directors' report and the audited accounts up to 30th June 1902.

II.—To elect two Directors in the room of Mr. W. A. Bankier and Mr. C. E. Smyth, who go out by rotation, but who are eligible for re-election.

III.—To elect two Auditors and to fix their remuneration.

W. D. CRUICKSHANK, Secretary and Treasurer.

Bank of Bengal, the 14th July 1902. (402—1)

Estate Patrick Charles Lyon, deceased.

NOTICE is hereby given that all creditors and other persons having any claims against the Estate of Patrick Charles Lyon, late of Calcutta, who died in Madras on the 25th November 1899, are hereby required to send in writing the particulars thereof to the undersigned, to whom Letters of Administration of the property and credits of the said deceased have been granted by the High Court of Judicature at Fort William in Bengal, on or before the 13th day of August 1902, after which date no claims will be admitted and the assets of the estate of the said deceased will be distributed. Dated the 7th day of July 1902.

J. W. BAKER, Administrator to the Estate of the late P. C. Lyon.

5 Lyon's Range, Calcutta. (356—1—940)

Howrah Mills Company, Limited.

NOTICE is hereby given that the Twenty-fourth Half-yearly Ordinary General Meeting of Shareholders will be held at the Registered Office of the Company, No. 9 Clive Row, Calcutta, on Friday, the 25th July 1902, at 12-45 P.M., to receive the Directors' Report, pass the audited accounts to 30th June 1902, declare a dividend and transact any other business that may be brought forward.

Dividend warrants will be made out in favour of Shareholders whose names are in the Company's books on the 10th July 1902.

The Share Transfer Register of the Company will be closed from Friday, the 11th, to Friday, the 25th, July 1902, both days inclusive.

By order of the Directors,

ERNSTHAUSEN LD.,

Managing Agents.

Calcutta, the 4th July 1902. (350—3—912)

Uncovenanted Service Family Pension Fund.

Results of Votes on the questions submitted in Circulars Nos. 1 and 2, dated the 4th March 1902.

SUBJECT.	Yes.	No.
Whether Mrs. Crouch* and family shall be admitted to the reduced pensions under Rule 40F, as recommended in Circular No. 1.	897	24
Whether Mr. F. W. deMonte shall be granted the gratuity recommended for him in Circular No. 2.	760	163

* *P.S.*—It having been ascertained that Mrs. Crouch has remarried, it was ruled by the Board that she is entitled to the proposed reduced pension up to the date of her second marriage.

By order of the Directors,

G. E. WARDE, Secretary.

(372—1)

Notification of Sale.

ESTATE NISTARINI DASSEE.

Peary Lall Maitra *versus* Gopal Chunder Chatterjee.

TO be sold by the Official Receiver of the High Court as Receiver of the estate of Nistarini Dassee, deceased, at the hour of 1 o'clock at noon, on Saturday, the 9th day of August next, at his office on the third floor of the High Court building, pursuant to an order of the said High Court made in this suit and dated the 27th day of August, the undermentioned landed properties:—

Re premises No. 28 Durga Charun Mitter's Street.

All that three-storied brick built messuage, tenement or dwelling-house, land, hereditaments, and premises, together with the piece and parcel of land whereon the same is erected and built, containing by estimation 14 chitaks, more or less, situate, lying, being at and numbered 28 Durga Charun Mitter's Street, in the town of Calcutta, and butted and bounded on the north by Durga Charun Mitter's Street, on the east by a common pathway, on the south by 28-1 Durga Charun Mitter's Street (property of Beni Madhub Baisack), and on the west by 27 Durga Charun Mitter's Street (the house of Nomai Chund Dutt and Brothers) howsoever, otherwise the same is or at any time heretofore was butted, bounded known or described.

Re permises No 25 Brindabun Bysack's Street.

All that two-storied brick-built messuage, tenement, dwelling-house, hereditaments and premises, together with the land whereon the same is erected and built, containing by estimation 1 cottah 1 chitak and 2 kanchas, more or less, situate, lying and being at and numbered 25 Brindabun Bysack's Street, Sootanoty, in the northern division of the town of Calcutta, and butted and bounded on the north by the privy and compound wall, municipal drain, filled-up lane, on the south by Brindabun Bysack's Street, on the east by the premises No. 24 Brindabun Bysack's Street, dwelling-house of Gopal Chunder Dass, and on the west by No. 26, Brindabun Bysack's Street, the dwelling-house of Panchanun Bhur or howsoever, otherwise the said house, land, hereditaments, and premises or any part thereof now are or is or heretofore were or was situated, bounded, called, known, numbered, described or distinguished.

Re premises No. 9 Ahireetolla Street.

All that three-storied brick-built messuage, tenement, dwelling-house, hereditaments, and premises, together with the rent-free land whereon the same is erected and built, containing by estimation 1 cottah, more or less, situate, lying, and being at and numbered 9 Ahireetollah Street, Sootanooty, in the northern division of the town of Calcutta, and butted and bounded on the north by Ahireetolla Street, on the south by No. 7 bustee in Durmahatta Street, a municipal drain and the raiyati land of Babu Dutt, on the east formerly by the land of Juggo Mohun Mookerjee and now by a filled-up drain, and on the west formerly by No. 8 Durmahatta Street, the land of Gocool Chandra Dutt, and now by the tenanted house belonging to Chandra Mullick or howsoever, otherwise the said house, land, hereditaments and premises or any part thereof now are or is or heretofore were or was situated, bounded, called, known, numbered, described or distinguished.

Re premises Nos. 4 and 4-1 Dhania Bagan Road.

All that two-storied brick-built messuage, tenement or dwelling house, land, hereditaments and premises, together with the land appertaining thereto and containing by estimation 1 cottah 11 chitaks, more or less, which is bounded on the north by No. 6 Dhania Bagan or Nikaseepara Lane, the dwelling-house and land of Raj Chandra Dass Boiragee, on the east by Nikaseepara, Lane, a municipal lane, on the west by the dwelling-house of Moti Bibee Nikaree, and on the south partly by Nikaseepara Lane, a public lane, and partly by the passage leading to the said house and that of Moti Bibee Nikaree, and which said premises form part of the piece or parcel of land contained in tauzi No 298, division No. 2, subdivision No. 12, in mauza Gourcebara, in Nikaseepara, at Shambazar, in thana Ultadighee, sub-registration district of Sealdah, and holding No. 97—44, and premises Nos. 4 and 4-1 Dhania Bagan Road, in the district of the 24-Parganas.

The conditions of sale can be seen at the office of the said Receiver and also at the office of Babu Navadwip Chandra Roy any time before the sale and will be produced at the sale.

C. E. GREY, Offg. Official Receiver, High Court.

High Court, Receiver's Office, the 8th July 1902.

(369—4)

In the goods of John Campbell, deceased.

PURSUANT to section 320 of Act X of 1865 and section 42 of Act XXVIII of 1866, notice is hereby given that all persons having claims against the estate of John Campbell, late a British subject of No 5 Lyon's Range, in the town of Calcutta, Merchant, deceased, should, on or before the 12th day of August 1902, send in particulars of such claims to the undersigned, after which date no claims will be admitted, and the assets of the estate of the deceased will be distributed.

J. W. BAKER, Administrator in India to the estate of the above deceased.

5 Lyon's Range, Calcutta, the 12th July 1902.

(384—1—941)

Notification.

TO be peremptorily sold by the Registrar of the Calcutta High Court, Original Side, in his sale-room in the Court-house on Saturday, the 16th August next, at 12 o'clock, noon, pursuant to a decree and an order of the said Court, made in suit No. 449 of 1898 (wherein Kanti Chunder Bhaduri is the plaintiff and Jogendra Chunder Bose is the defendant), and dated, respectively, the 5th day of September 1898 and the 7th day of March 1900, the defendant's following property:—

Lot I.—All that the northern portion of the premises No. 63 (formerly 21-A) and after that No 33 Bachu Chatterjee's Street with buildings thereon and the land thereunto belonging, containing by estimation 3 cottahs and 8 chittaks, be the same a little more or less, included in Holding No. 605 in Block No. 14, North Division, paying an annual revenue of Re. 1-4-7 for the entire holding to the Calcutta Collectorate, and such northern portion being bounded on the north partly by a public lane and partly by the common passage (3 feet wide) belonging to the defendant and his brother Surendra Nath Bose, on the east by the land belonging to the late Baney Madhub Dutt, on the south by the common passage (3 feet wide) belonging to the defendant and his brother Girindra Chunder Bose, and on the west partly by the house of Abhoy Churn Bonerjee and partly by the house of Sreemutty Annopurna Dassee.

The conditions of sale and abstract of title may be seen at the office of Babu Kalidas Bhunjo at No 4 Strand and at the office of the Registrar, High Court, Original Jurisdiction, on any day before the sale and will be produced at the sale.

W. R. FINK, Registrar.

Kalidas Bhunjo, Plaintiff's Attorney.

Calcutta High Court, Original Jurisdiction, the 1st July 1902. (403—1)

Notification.

IT is notified that the Mandal Estate, Balasore, will not be responsible for debts contracted by Babus Birendra Coomar Mandal and Hemendra Coomar Mandal, of Chinsurah and Balasore, without the sanction of the District Judge of Cuttack, from 20th October 1901, the date on which the Common Manager took over charge.

By order,

J. N. DUTT, Common Manager.

Balasore, the 6th July 1902. (370—3)

Notice.

EXECUTION CASE No. 280 OF 1902.

PRESENT:

Babu Pran Krishna Biswas, Munsif, 1st Court, Diamond Harbour.

Narattam Dass and others, decree-holders, *versus* Raja Sir Sourindra Mohon Tagore, judgment-debtor.

Amount of claim Rs. 1,143-7-9.

THE right, title and interest of the judgment-debtors in the property as per schedule hereto annexed and the profits arising out of the *mela* held on the same in the Pous Makar Sankranti of every year are to be sold on 14th July 1902 by the Nazir of this Court by public auction sale. The price set on the property by the decree-holders is Rs 700 and the annual jama payable to each of the three decree-holders by the judgment-debtor is Rs. 65.

Schedule.—Sagore island, which is bounded on the north by the Ganges and the Tapee, and on the east, south and west by the Bay of Bengal

PRAN KRISHNA BISWAS, Munsif.

(374—1)

INSOLVENT NOTICES.

In the Court for the Relief of Insolvent Debtors at Calcutta.

In the matter of SONTOSH LALL DUTT, an insolvent.

On Wednesday, the 18th day of June last, it was ordered that the matters of the petition of the said insolvent be heard on Tuesday, the 5th day of August next, and that the said insolvent do then attend to be examined before the said Court.

Manick Lall Seal, Attorney. (357—2)

In the matter of BHOLA NATH SIRKAR, an insolvent.

On Wednesday, the 18th day of June last, it was ordered that the matters of the petition of the said insolvent be heard on Tuesday, the 5th day of August next, and that the said insolvent do then attend to be examined before the said Court.

Manmatho Nath Sen, Attorney. (358—2)

In the matter of LESLIE COWAN BELL, an insolvent.

On Monday, the 30th day of June last, it was ordered hat the matters of the petition of the said insolvent be heard on Tuesday, the 5th day of August next, and that the said insolvent do then attend to be examined before the said Court.

C. G. Lewis, Attorney. (359—2)

In the matter of MALIRAM and MADAN GOPAL, lately carrying on business as dealers in piece-goods at No. 51 Cross Street, in the town of Calcutta, insolvents.

On Tuesday, the 17th day of June last, it was, on the petition of Jokhiram, residing at No. 3 Jugo Mohun Mullick's Lane, in the town of Calcutta, Mathra Das, residing at Cawnpore, in the United Provinces, and Iswar Das, residing at No. 3 Jugo Mohun Mullick's Lane, aforesaid, all carrying on business in copartnership as merchants at No. 3 Jugo Mohun Mullick's Lane, in Calcutta, under the name, style and firm of Lal Chand Buldeo Das, creditors of the said insolvents, adjudged that the said Maliram and Madan Gopal have committed an act of insolvency under the provisions of the Act XI Vic., Chapter XXI, and by another order of the same date the estate and effects of the said insolvents were vested in the Official Assignee.

O. C. Gangooly, Attorney. (360—2)

Chief Clerk's Office, the 7th day of July 1902.

In the matter of HENRY LAWRENCE SMITH an insolvent.

On Monday, the 30th day of June last, it was ordered that the matters of the petition of the said insolvent be heard on Tuesday, the 2nd day of September next, and that the said insolvent do then attend to be examined before the said Court.

Jogendra Nath Chatterjee, Attorney. (386—2)

In the matter of AGA SYED BAKUR SHIRAZI, an insolvent.

On Monday, the 2nd day of June last, it was ordered that the matters of the petition of the said insolvent be heard on Tuesday, the 5th day of August next, and that the said insolvent do then attend to be examined before the said Court.

S. Md. Sultan Alum, Attorney. (387—2)

In the matter of KANYE LAL AGARWALLA, an insolvent.

On Friday, the 6th day of June last, it was ordered that the matters of the petition of the said insolvent be heard on Tuesday, the 5th day of August next, and that the said insolvent do then attend to be examined before the said Court.

Fox and Mandal, Attorneys, (388—2)

In the matter of ROGER JOHN DENNETT, an insolvent.

On Thursday, the 12th day of June last, it was ordered that the matters of the petition of the said insolvent be heard on Tuesday, the 5th day of August next, and that the said insolvent do then attend to be examined before the said Court.

T. H. Wilson & Co., Attorneys. (389—2)

In the matter of FOOL CHAND, an insolvent.

On Thursday, the 12th day of June last, it was ordered that the matters of the petition of the said insolvent be heard on Tuesday, the 5th day of August next, and that the said insolvent do then attend to be examined before the said Court.

Kali Mohun Rakshit, Attorney. (390—2)

In the matter of SAGORMULL BAGARIA, an insolvent.

On Friday, the 13th day of June last, it was ordered that the matters of the petition of the said insolvent be heard on Tuesday, the 5th day of August next, and that the said insolvent do then attend to be examined before the said Court.

Akshay Kumar Mitter, Attorney. (391—2)

In the matter of SATISH CHUNDER BOSE and SARAT CHUNDER BOSE, carrying on business as Jute Balers at No. 16, Nilmoney Mitter's Street, in the town of Calcutta, under the name of Sarat Chunder Bose, insolvents.

On Monday, the 30th day of June last, it was, on the petition of Ghanu Lal Sanyal, residing at No. 111, Aheeritolla Street, in the town of Calcutta, a creditor of the above-named insolvents, Satish Chunder Bose and Sarat Chunder Bose, adjudged that the said Satish Chunder Bose and Sarat Chunder Bose have committed an act of insolvency under the provisions of the Act XI, Vic Cap. XXI, and by another order of the same date the estate and effects of the said insolvents were vested in the Official Assignee.

Mani Lal Sen, Attorney for the said creditor, Ghanu Lal Sanyal. (392—2)

In the matter of CHOONILAL, an insolvent.

Notice that an application for an *ad interim* protection order has been this day made by the said insolvent, and that such application will be heard and disposed of by the Acting Commissioner of the Insolvent Court on Monday, the 21st day of July instant, at the hour of half-past ten o'clock in the forenoon.

☞Any creditor of the said insolvent desirous of opposing such application must appear before the said Court at the time and place aforesaid.

Charu Chundra Bose, Attorney. (393—1)

In the matter of ISWAR DAS, an insolvent.

Notice that an application for an *ad interim* protection order has been made by the said insolvent on the 12th day of July instant, and that such application will be heard and disposed of by the Acting Commissioner of the Insolvent Court on Monday, the 21st day of July instant, at the hour of half-past ten o'clock in the forenoon.

☞Any creditor of the said insolvent desirous of opposing such application must appear before the said Court at the time and place aforesaid.

Opurbo Coomar Gangooly, Attorney. (394—1)

In the matter of HENRY LAWRENCE SMITH, a Guard on the East Indian Railway, residing at No. 40, Telkul Ghat, Howrah a European British subject, an insolvent.

Notice that the petition of the said insolvent seeking the benefit of the Act XI Vic., Chapter XXI, was filed in the Office of the Chief Clerk on Monday, the 30th day of June last, and by an order of the same date the estate and effects of the said insolvent were vested in the Official Assignee.

J. N. Chatterjee, Attorney. (395—1)

In the matter of TOLARAM BOTHRA, residing at No. 229, Harrison Road, in the town of Calcutta, carrying on business as a dealer in piece-goods at Nos. 95-96, Cross Street in Calcutta aforesaid, under the name and style of Tolaram Bothra, a trader, an insolvent.

Notice that the petition of the said insolvent seeking the benefit of the Act XI Vic., Chapter XXI, was filed in the Office of the Chief Clerk on Tuesday, the 10th day of June last, and by an order of the same date the estate and effects of the said insolvent were vested in the Official Assignee.

Fox and Mandal, Attorneys. (396—1)

In the matter of SAGORMULL BAGARIA, residing at No. 161, Radha Kant Deb's Street, in the town of Calcutta, lately employed as gomasta of the firm of Gajadhar Shaw Prayagram, at present having no employment, an insolvent.

Notice that the petition of the said insolvent seeking the benefit of the Act XI Vic, Chapter XXI, was filed in the Office of the Chief Clerk on Friday, the 13th day of June last, and by an order of the same date the estate and effects of the said insolvent were vested in the Official Assignee.

Akhoy Kumar Mitter, Attorney. (397—1)

In the matter of FOOL CHAND, lately residing at No. 23, Hanspooker Street, in the town of Calcutta, lately carrying on business in Calcutta aforesaid as a broker, and now a prisoner in the civil side of the Presidency Jail, an insolvent.

Notice that the petition of the said insolvent seeking the benefit of the Act XI Vic., Chapter XXI, was filed in the Office of the Chief Clerk on Thursday, the 12th day of June last, and by an order of the same date the estate and effects of the said insolvent were vested in the Official Assignee.

Kalimohun Rakshit, Attorney. (393—1)

In the matter of ROGER JOHN DENNETT, lately carrying on business at Jhansi in the North-Western Provinces of India, under the name of the Pioneer Cycle and Machine Works, a European British subject of His Majesty, at present residing at Kharagpur, in the district of Midnapur, Bengal, and employed as a Driver in the Bengal-Nagpur Railway, an insolvent.

Notice that the petition of the said insolvent seeking the benefit of the Act XI Vic, Chapter XXI, was filed in the Office of the Chief Clerk on Thursday, the 12th day of June last, and by an order of the same date the estate and effects of the said insolvent were vested in the Official Assignee.

T. H. Wilson & Co., Attorneys. (399—1)

In the matter of KANYE LAL AGARWALLA, residing at No 15, Raj Mohun Bose's Lane, in the town of Calcutta, formerly a gomasta in the employ of Delsookroy Ramjus of No. 26, Baustollah Gully, Calcutta, but now without occupation, an insolvent.

Notice that the petition of the said insolvent seeking the benefit of the Act XI Vic., Chapter XXI, was filed in the Office of the Chief Clerk on Friday, the 6th day of June last, and by an order of the same date the estate and effects of the said insolvent were vested in the Official Assignee.

Fox and Mandal, Attorneys. (400—1)

In the matter of AGA SYED BAKUR SHIRAZI of No. 22, Lower Chitpur Road, in the town of Calcutta, at present a prisoner in the Presidency Jail, an insolvent.

Notice that the petition of the said insolvent seeking the benefit of the Act XI Vic., Chapter XXI, was filed in the Office of the Chief Clerk on Monday, the 2nd day of June last, and by an order of the same date the estate and effects of the said insolvent were vested in the Official Assignee.

S. Md. Sultan Alum, Attorney. (401—1)

Chief Clerk's Office, the 14th day of July 1902.

CALCUTTA POST OFFICE NOTICE.

Mails for—	Date and hour of closing at the General Post Office, Calcutta.		Route by which despatched.
	1902.	P.M.	
United Kingdom, Aden, Egypt, Europe, America, West Africa *vid* United Kingdom and East Africa *vid* Aden (and also South Africa, if superscribed on the cover *vid* United Kingdom or Aden).	17th July	At 6-30	Per P. & O. steamer from Bombay.
Parcels and money-orders for the United Kingdom and other Foreign places.	16th ,,	Parcels P.M. At 5 M.-O. P.M. At 4	Ditto ditto.
* Australasian Colonies ...	22nd ,,	,, 7-30	*Vid* Tuticorin and Colombo.*
† Straits Settlements (also China and Japan, if the steamer's name is superscribed on the cover).	18th ,,	,, 8-30	Per steamer *Suisang*.
Burma	17th ,,	,, 7-30	Per B. I. S. N. Co.'s steamer.
Burma, Penang and Singapore.	19th ,,	,, 7-30	Ditto ditto.
Akyab, Kyaukpyu and Sandoway.	19th ,,	,, 7-30	Ditto ditto.
Burma, Tavoy and Mergui ...	21st ,,	,, 7-30	Ditto ditto.
Port Blair	19th ,,	,, 7-30	*Vid* Rangoon.
Mauritius, Réunion, Mayotte, and Nossi-Be.	23rd ,,	,, 7-30	Per steamer *Wardha* from Colombo.
Port Blair	21st ,,	,, 7-30	*Vid* Rangoon.
South Africa (Letters) ..	16th ,,	,, 7-30	Per steamer *City of Belfast* from Colombo.
Ditto (Parcels for Natal and Cape Colony only).	16th ,,	,, 5	Ditto ditto.

* Although the date entered in column 2 is, as far as can be calculated, the latest safe date of posting for the next Mail steamer, full allowance being made for the steamer being in advance of her published timing, Mails for the places mentioned in column 1 are despatched daily to Colombo, so that they may proceed by any steamer that has been unusually accelerated or retarded, or by any special opportunity that may be afforded by a steamer not belonging to one of the regular lines.

† Correspondence for China and Japan is despatched daily to Colombo, so that they may proceed by the first steamer available.

1. The letter-box for Inland articles will be cleared for the forenoon Mails at the following hours :—

For Goalundo, Arakan and Chittagong, at 5-30 A.M.
For Midnapore and Orissa districts, at 8-30 A.M.
For the Eastern districts, as far as Dacca and Mymensingh, at 6-30 A.M.
For Khulna and Jessore districts, at 7-30 A.M.
For Bombay, Central Provinces and Midnapore, *vid* Bengal-Nagpur Railway, at 10-45 A.M., and with a late fee of ½ anna up to 11-35 A.M.

2. The letter-box will be cleared for the evening Mails at the following hours, viz :—

For the East Indian Railway Loop Mail, at 2-30 P.M., and with a late fee of ½ anna up to 2-55 P.M.
For the Northern Bengal, Darjeeling and Assam Mails, at 3-25 P.M., and with a late fee of ½ anna up to 3-50 P.M.
For the Bombay Mail, *vid* Jubbulpore, at 6 P.M., and with a late fee of ½ anna up to 6-30 P.M.

For the Punjab Mail, at 7-30 P.M.
For Midnapore, Orissa and Madras Presidency, at 7-30 P.M.
For the Khulna Mail, at 7-30 P.M.
For the Eastern Bengal Mail, at 7-30 P.M.
} and with a late fee of ½ anna up to 8 P.M. and with a late fee of 1 anna up to 8-45 P.M.

3. Late registered letters will be received between the following hours :—

For the Bombay Mail, *vid* Jubbulpore, from 5 P.M. to 6-15 P.M.
For the Punjab Mail, from 6 P.M. to 7 P.M.
For the Eastern Bengal Mail, from 6 P.M. to 7 P.M.
For the Khulna Mail, from 6 P.M. to 7 P.M.
For Midnapore, Orissa and the Madras Presidency, from 6 P.M. to 7 P.M.

NOTE.—The late fee on each registered letter will be 2 annas which must be prepaid in stamps on the letter.

4. Articles for Burma and for Port Blair by sea are received without late fee up to 7-30 P.M., and with a late fee of ½ anna up to 8 P.M.

5. On the latest safe day of despatch of Mails for the Australasian Colonies, or any other Foreign Countries, *vid* Madras or Tuticorin, the letter-box for Foreign articles will be cleared for the last time at 7-30 P.M., and late letters and papers fully prepaid will be received up to 8-45 P.M.

6. On the day of despatch of the Mail for Europe (Thursday), the letter-box for Foreign articles will be cleared for the last time, for articles, without the late fee, at 6-30 P.M., and late letters and papers fully prepaid will be received up to 6-45 P.M. Late registered articles will be received from 5 to 6 P.M. On other days the letter-box for Foreign articles will be cleared for the last time, without the late fee, at 6 P.M., and late letters and papers will be received up to 6-30 P.M. for despatch by any Foreign Mails, *vid* Bombay, the same night and up to 8-30 P.M., late letters and papers up to 9 P.M., for any Foreign Mails despatched by sea. Foreign Mails for despatch *vid* Madras or Tuticorin are received up to 7-30 P.M., and with a late fee up to 8-45 P.M. The late fee for Foreign articles is 4 annas, which must be prepaid in stamps affixed to the articles.

JOHN OWENS,
Presidency Postmaster.

CALCUTTA G. P. O.,
The 15th July 1902.

NADIA RIVERS.

Report showing the least depths of water for the week ending Friday, the 11th July 1902.

Name of river.	Reach of river.	Least depth of water sounding.	Remarks.
		Ft. in.	
Bhagirathi.	Entrance from Ganges .	6 0	
	Thence to Giriah .	4 0	Giriah.
	From Giriah to Jangipur ...	5 3	Alampur.
	,, Jangipur to Berhampore	4 0	Lalbagh.
	,, Berhampore to Katwa	3 6	Mirzapur.
	,, Katwa to Nadia ...	4 9	Gotipara.
Bhyrab-Jalangi.	Entrance from Ganges ...	10 0	
	Thence to Akrigan)	10 0	Chakharpara.
	Akrigan) to junction of the Bhyrub and Jalangi	9 0	Horharia.
	Thence to Patkabari	5 9	Lalnagar.
	Patkabari to Nadia	8 0	Fetudanga.
Mathabhanga.	Entrance from Ganges ...	4 9	
	Thence to Dewangan)	5 0	Jamalpur.
	From Dewangan) to Shibarpur	4 9	Kurmipara.
	,, Shibarpur to Boalia ..	5 0	Shamp r.
	,, Boalia to Chuadanga ...	5 6	Dasapara.
	,, Chuadanga to Kisangan) and Hanskhali..	5 9	Ganjaghat.

Gauge Readings.

	Locality.	Date.	Hour.	Height above zero.	Height above mean sea level	Remarks.
			A.M.	Ft.	Ft.	
Ganges ...	Sahebgan) ...	12-7-1902	6	10·00	78·00	Rising.
	Rampur Boalia...	12-7-1902	Noon	9·39	51·39	Do.
	Entrance of Bhagirathi Geriah...	10-7-1902	A.M. 7	...	57·30	Do.
	Entrance of Bhyrub Jalangi Akhrigan) ...	13-7-1902	A.M. 7	...	48·90	Do.
Bhagirathi.	Entrance of Mathabhanga ...	11-7-1902	...	7·75	...	Do.
	Jangipur ...	11-7-1902	...	...	55·65	Do.
	Berhampore ...	14-7-1902	A.M. 10	10 12	43·87	Do.
	Katwa ...	10-7-1902	...	14·15	29·31	Do.
Jalangi	Krishnagar ...	11-7-1902	...	7·25	...	Do.
	Sarupgan) ...	11-7-1902	Noon	...	10·50	Do
Mathabhanga.	Hanskhali ...	11-7-1902	P.M. 4	6 70	...	Do.

A. K. BANERJEE, *Accts.*,
For *Exe. Engr., Nadia Rivers Division.*
Berhampore, the 14th July 1902.

GOVERNMENT PUBLICATIONS FOR SALE

At the Bengal Secretariat Book Depôt, Writers' Buildings, Calcutta, and by the following Agents :—

AGENTS IN INDIA.

Messrs. Thacker, Spink & Co., Calcutta and Simla.
Messrs. Newman & Co., Calcutta.
Messrs. Higginbotham & Co., Madras.
Messrs. Thacker & Co., Ld., Bombay.
Messrs. A. J. Combridge & Co, Bombay.
Mr. E. Seymour Hale, 53 Esplanade Road, Fort, Bombay, and Calcutta.
The Superintendent, American Baptist Mission Press, Rangoon.
Rai Sahib M. Gulab Singh & Sons, Proprietors of the Mufid-i-am Press, Lahore, Punjab.
Messrs. S. K. Lahiri & Co., Printers and Booksellers, College Street, Calcutta.
Messrs. V. Kalyanarama Iyer & Co., Booksellers, &c. Madras.
Messrs. D. B. Taraporevala, Sons & Co., Booksellers, Bombay.

AGENTS IN ENGLAND.

Mr. E. A. Arnold, 37 Bedford Street, Strand, London.
Messrs. Constable & Co., 2 Whitehall Gardens, London.
Messrs. Sampson Low, Marston & Co., St. Dunstan's House, Fetter Lane, London.
Messrs. Luzac & Co., 46 Great Russell Street, London.
Messrs. Kegan Paul, Trench, Trubner & Co., Charing Cross Road, London.
Mr. B. Alfred Quaritch, 15 Piccadilly, London.
Messrs. P. S. King & Son, 2 & 4 Great Smith Street, Westminister, London.
Messrs. H. S. King & Co., 65 Cornhill, London.
Messrs. Williams and Norgate, Oxford.
Messrs. Deighton Bell & Co., Cambridge.

AGENTS ON THE CONTINENT.

Messrs. R. Friedlander & Sohn, Berlin, N. W. Carlstrasse, 11.
Mr. Otto Harrassowitz, Leipzig.
Mr. Karl Hiersemann, Leipzig.
Mr. Ernest Leroux, 28 Rue Bonaparte, Paris.
Mr. Martinus Nijhoff, The Hague.

NOTICE.—Books required for private use can be purchased. Applications should be accompanied by a remittance in each case.

All remittances on account of subscriptions to, or prices of, Gazettes, Indian Law Reports or other Government publications available for sale at the Bengal Secretariat Book Depôt, or for cost of advertisements published in the Gazettes should, in future, be made payable to the "Treasurer, Bengal Secretariat, Calcutta." Advices of such remittances, if separately sent, should be addressed to the "Accountant, Bengal Secretariat." All advertisements intended for publication in the *Calcutta* or *Bengali Gazette* should be sent direct to the Superintendent, Government Printing, Bengal.

Books required for the Public Service should be obtained through the Heads of Departments.

☞ The amounts within parentheses are for packing and postage.

NEW PUBLICATIONS ISSUED DURING THE CURRENT QUARTER.

APPOINTMENT DEPARTMENT.

Quarterly Civil List of Bengal, corrected up to 1st July 1902. Super-Royal 8vo. Paper cover. Rs. 3. (4*a*.)

GENERAL DEPARTMENT.

Report of Emigration from the Port of Calcutta to British and Foreign Colonies, 1901. By the Protector of Emigrants, Calcutta. F'cap. Paper cover. 12*a*. (1*a*.)

LEGISLATIVE DEPARTMENT.

The Bengal Vaccination Act, 1880 (Bengal Act V of 1880), as modified up to 1st June 1902. Royal 8vo. Paper cover. Price 4*a*. (1*a*.)

POLITICAL DEPARTMENT.

Administration Report on the Jails of Bengal for the year 1901. F'cap. Board. Paper cover. Re. 1. (3*a*.)

REVENUE DEPARTMENT.

Season and Crop Report of Bengal for the year 1901-1902 F'cap. Paper cover. 8*a*. (1*a*.)
The Sale Law Manual, a Manual of the Revenue and the Patni Sale Laws with Notes and the rules, &c., under them. Royal 8vo. Board. Paper cover. Re. 1-4. (3*a*.)
Price-list of staple food-crops in the Local areas of Bengal, for the period from 1st January to 31st March 1901. F'cap. Board. Paper cover. Re 1. (2*a*.)

PUBLICATIONS ISSUED BETWEEN THE 1ST APRIL AND THE 30TH JUNE, 1902.

APPOINTMENT DEPARTMENT.

Quarterly Civil List of Bengal corrected up to 1st April 1902. Super-royal 8vo. Paper cover. Price Re. 1. (4*a*.)

FINANCIAL DEPARTMENT.

The Stamp Manual, 1902. A Manual for the guidance of officers in the administration of the Stamp Department. Royal 8vo. Board, Paper cover. Price Re. 1-8 (6*a*.)
Annual Report on the consumption of Stationery in Bengal during 1900-1901. F'cap. Paper cover. Re. 1. (2*a*.)

GENERAL DEPARTMENT.

List of Officers in the Subordinate Educational Service, Bengal, corrected up to 1st April 1902 F'cap. Paper cover. 8*a*. (1*a*.)

CALCUTTA POST OFFICE NOTICE.

Mails for—	Date and hour of closing at the General Post Office, Calcutta.		Route by which despatched.
	1902.	P.M.	
United Kingdom, Aden, Egypt, Europe, America, West Africa *vid* United Kingdom and East Africa *vid* Aden (and also South Africa, if superscribed on the cover *vid* United Kingdom or Aden).	17th July	At 6-30	Per P. & O. steamer from Bombay.
Parcels and money-orders for the United Kingdom and other Foreign places.	16th ,,	Parcels P.M. At 5 M.-O. P.M. At 4	Ditto ditto.
* Australasian Colonies ...	22nd ,,	,, 7-30	*Vid* Tuticorin and Colombo.*
† Straits Settlements (also China and Japan, if the steamer's name is superscribed on the cover).	18th ,,	,, 8-30	Per steamer *Swisang*.
Burma	17th ,,	,, 7-30	Per B. I. S. N. Co.'s steamer.
Burma, Penang and Singapore.	19th ,,	,, 7-30	Ditto ditto.
Akyab, Kyaukpyu and Sandoway.	19th ,,	,, 7-30	Ditto ditto.
Burma, Tavoy and Mergui ...	21st ,,	,, 7-30	Ditto ditto.
Port Blair	19th ,,	,, 7-30	*Vid* Rangoon.
Mauritius, Réunion, Mayotte, and Nossi-Be.	23rd ,,	,, 7-30	Per steamer *Wardha* from Colombo.
Port Blair	21st ,,	,, 7-30	*Vid* Rangoon.
South Africa (Letters) ...	16th ,,	,, 7-30	Per steamer *City of Belfast* from Colombo.
Ditto (Parcels for Natal and Cape Colony only).	16th ,,	,, 5	Ditto ditto.

* Although the date entered in column 2 is, as far as can be calculated, the latest safe date of posting for the next Mail steamer, full allowance being made for the steamer being in advance of her published timing, Mails for the places mentioned in column 1 are despatched daily to Colombo, so that they may proceed by any steamer that has been unusually accelerated or retarded, or by any special opportunity that may be afforded by a steamer not belonging to one of the regular lines.

† Correspondence for China and Japan is despatched daily to Colombo, so that they may proceed by the first steamer available.

1. The letter-box for Inland articles will be cleared for the forenoon Mails at the following hours :—

For Goalundo, Arakan and Chittagong, at 5-30 A.M.
For Midnapore and Orissa districts, at 8-30 A.M.
For the Eastern districts, as far as Dacca and Mymensingh, at 6-30 A.M.
For Khulna and Jessore districts, at 7-30 A.M.
For Bombay, Central Provinces and Midnapore, *vid* Bengal-Nagpur Railway, at 10-45 A.M., and with a late fee of ½ anna up to 11-35 A.M.

2. The letter-box will be cleared for the evening Mails at the following hours, viz :—

For the East Indian Railway Loop Mail, at 2-30 P.M., and with a late fee of ½ anna up to 2-55 P.M.
For the Northern Bengal, Darjeeling and Assam Mails, at 3-25 P.M., and with a late fee of ½ anna up to 3-50 P.M.
For the Bombay Mail, *vid* Jubbulpore, at 6 P.M., and with a late fee of ½ anna up to 6-30 P.M.
For the Punjab Mail, at 7-30 P.M.
For Midnapore, Orissa and Madras Presidency, at 7-30 P.M.
For the Khulna Mail, at 7-30 P.M.
For the Eastern Bengal Mail, at 7-30 P.M.
} and with a late fee of ½ anna up to 8 P.M. and with a late fee of 1 anna up to 8-45 P.M.

3. Late registered letters will be received between the following hours :—

For the Bombay Mail, *vid* Jubbulpore, from 5 P.M. to 6-15 P.M.
For the Punjab Mail, from 6 P.M. to 7 P.M.
For the Eastern Bengal Mail, from 6 P.M. to 7 P.M.
For the Khulna Mail, from 6 P.M. to 7 P.M.
For Midnapore, Orissa and the Madras Presidency, from 6 P.M. to 7 P.M.

NOTE.—The late fee on each registered letter will be 2 annas which must be prepaid in stamps on the letter.

4. Articles for Burma and for Port Blair by sea are received without late fee up to 7-30 P.M., and with a late fee of ½ anna up to 8 P.M.

5. On the latest safe day of despatch of Mails for the Australasian Colonies, or any other Foreign Countries, *vid* Madras or Tuticorin, the letter-box for Foreign articles will be cleared for the last time at 7-30 P.M., and late letters and papers fully prepaid will be received up to 8-45 P.M.

6. On the day of despatch of the Mail for Europe (Thursday), the letter-box for Foreign articles will be cleared for the last time, for articles, without the late fee, at 6-30 P.M., and late letters and papers fully prepaid will be received up to 6-45 P.M. Late registered articles will be received from 5 to 6 P.M. On other days the letter-box for Foreign articles will be cleared for the last time, without the late fee, at 6 P.M., and late letters and papers will be received up to 6-30 P.M. for despatch by any Foreign Mails, *vid* Bombay, the same night and up to 8-30 P.M., late letters and papers up to 9 P.M., for any Foreign Mails despatched by sea. Foreign Mails for despatch *vid* Madras or Tuticorin are received up to 7-30 P.M., and with a late fee up to 8-45 P.M. The late fee for Foreign articles is 4 annas, which must be prepaid in stamps affixed to the articles.

JOHN OWENS,
Presidency Postmaster.

CALCUTTA G. P. O.,
The 15th July 1902.

NADIA RIVERS.

Report showing the least depths of water for the week ending Friday, the 11th July 1902.

Name of river.	Reach of river.	Least depth of water soundings.	Remarks.
		Ft. in.	
Bhagirathi.	Entrance from Ganges ..	6 0	
	Thence to Giriah ..	4 0	Giriah.
	From Giriah to Jangipur ...	5 3	Alampur.
	,, Jangipur to Berhampore	4 0	Lalbagh.
	,, Berhampore to Katwa	3 6	Mirzapur.
	,, Katwa to Nadia ...	4 0	Gotipara.
Bhyrab-Jalangi.	Entrance from Ganges ...	10 0	
	Thence to Akriganj ...	10 0	Chakharpara.
	Akriganj to junction of the Bhyrub and Jalangi	9 0	Horharia.
	Thence to Patkabari	8 9	Lalnagar.
	Patkabari to Nadia	8 0	Petudanga.
Mathabhanga.	Entrance from Ganges ...	4 9	
	Thence to Dewanganj	5 0	Jamalpur.
	From Dewanganj to Shikarpur	4 9	Kurmipara.
	,, Shikarpur to Boalia ...	5 0	Shamp r.
	,, Boalia to Chundanga ...	5 6	Dasspara.
	,, Chundanga to Krisnaganj and Hanskhali..	5 9	Ganjaghat.

Gauge Readings.

	Locality.	Date.	Hour.	Height above zero.	Height above mean sea level	Remarks.
			A.M.	Ft.	Ft.	
Ganges ...	Sahebganj ...	12-7-1902	6	10·00	78·00	Rising.
	Rampur Boalia...	12-7-1902	Noon	9·30	51·30	Do.
	Entrance of Bhagirathi Geriah...	10-7-1902	A.M. 7	...	57·30	Do.
	Entrance of Bhyrub Jalangi Akhriganj ...	13-7-1902	A.M. 7	...	48·90	Do.
Bhagirathi.	Entrance of Mathabhanga ...	11-7-1902	...	7·75	...	Do.
	Jangipur ...	11-7-1902	...	...	53·65	Do.
	Berhampore ...	14-7-1902	A.M. 10	10 12	43·87	Do.
	Katwa ...	10-7-1902	...	14·15	29·31	Do.
Jalangi	Krishnagar ...	11-7-1902	...	7·25	...	Do.
	Sarupganj ...	11-7-1902	Noon	...	10·50	Do
Mathabhanga.	Hanskhali ...	11-7-1902	P.M. 4	6 70	...	Do.

A. K. BANERJEE, *Accts.*,
For *Exe. Engr., Nadia Rivers Division.*
Berhampore, the 14th July 1902.

GOVERNMENT PUBLICATIONS FOR SALE

At the Bengal Secretariat Book Depôt, Writers' Buildings, Calcutta, and by the following Agents :—

AGENTS IN INDIA.

Messrs. Thacker, Spink & Co., Calcutta and Simla.
Messrs. Newman & Co., Calcutta.
Messrs. Higginbotham & Co., Madras.
Messrs. Thacker & Co., Ld., Bombay.
Messrs. A. J. Combridge & Co, Bombay.
Mr. E. Seymour Hale, 53 Esplanade Road, Fort, Bombay, and Calcutta.
The Superintendent, American Baptist Mission Press, Rangoon.
Rai Sahib M. Gulab Singh & Sons, Proprietors of the Mufid-i-am Press, Lahore, Punjab.
Messrs. S. K. Lahiri & Co., Printers and Booksellers, College Street, Calcutta.
Messrs. V. Kalyanarama Iyer & Co., Booksellers, &c. Madras.
Messrs. D. B. Taraporevala, Sons & Co., Booksellers, Bombay.

AGENTS IN ENGLAND.

Mr. E. A. Arnold, 37 Bedford Street, Strand, London.
Messrs. Constable & Co., 2 Whitehall Gardens, London.
Messrs. Sampson Low, Marston & Co., St. Dunstan's House, Fetter Lane, London.
Messrs. Luzac & Co., 46 Great Russell Street, London.
Messrs. Kegan Paul, Trench, Trubner & Co., Charing Cross Road, London.
Mr. B. Alfred Quaritch, 15 Piccadilly, London.
Messrs. P. S. King & Son, 2 & 4 Great Smith Street, Westminster, London.
Messrs. H. S. King & Co., 65 Cornhill, London.
Messrs. Williams and Norgate, Oxford.
Messrs. Deighton Bell & Co., Cambridge.

AGENTS ON THE CONTINENT.

Messrs. R. Friedlander & Sohn, Berlin, N. W. Carlstrasse, 11.
Mr. Otto Harrassowitz, Leipzig.
Mr. Karl Hiersemann, Leipzig.
Mr. Ernest Leroux, 28 Rue Bonaparte, Paris.
Mr. Martinus Nijhoff, The Hague.

NOTICE.—Books required for private use can be purchased. Applications should be accompanied by a remittance in each case.

All remittances on account of subscriptions to, or prices of, Gazettes, Indian Law Reports or other Government publications available for sale at the Bengal Secretariat Book Depôt, or for cost of advertisements published in the Gazettes should, in future, be made payable to the "Treasurer, Bengal Secretariat, Calcutta" Advices of such remittances, if separately sent, should be addressed to the "Accountant, Bengal Secretariat." All advertisements intended for publication in the *Calcutta* or *Bengali Gazette* should be sent direct to the Superintendent, Government Printing, Bengal.

Books required for the Public Service should be obtained through the Heads of Departments.

☞ *The amounts within parentheses are for packing and postage.*

NEW PUBLICATIONS ISSUED DURING THE CURRENT QUARTER.

APPOINTMENT DEPARTMENT.

Quarterly Civil List of Bengal, corrected up to 1st July 1902. Super-Royal 8vo. Paper cover. Rs. 3. (4*a*.)

GENERAL DEPARTMENT.

Report of Emigration from the Port of Calcutta to British and Foreign Colonies, 1901. By the Protector of Emigrants, Calcutta. F'cap. Paper cover. 12*a*. (1*a*.)

LEGISLATIVE DEPARTMENT.

The Bengal Vaccination Act, 1880 (Bengal Act V of 1880), as modified up to 1st June 1902. Royal 8vo. Paper cover. Price 4*a*. (1*a*.)

POLITICAL DEPARTMENT.

Administration Report on the Jails of Bengal for the year 1901. F'cap. Board. Paper cover. Rs. 3. (3*a*.)

REVENUE DEPARTMENT.

Season and Crop Report of Bengal for the year 1901-1902 F'cap. Paper cover. 8*a*. (1*a*.)
The Sale Law Manual, a Manual of the Revenue and the Patni Sale Laws with Notes and the rules, &c., under them. Royal 8vo. Board. Paper cover. Re. 1-4. (3*a*.)
Price-list of staple food-crops in the Local areas of Bengal, for the period from 1st January to 31st March 1901. F'cap. Board. Paper cover. Re 1. (2*a*.)

PUBLICATIONS ISSUED BETWEEN THE 1ST APRIL AND THE 30TH JUNE, 1902.

APPOINTMENT DEPARTMENT.

Quarterly Civil List of Bengal corrected up to 1st April 1902. Super-royal 8vo. Paper cover. Price Rs. 3. (4*a*.)

FINANCIAL DEPARTMENT.

The Stamp Manual, 1902. A Manual for the guidance of officers in the administration of the Stamp Department. Royal 8vo. Board. Paper cover. Price Re. 1-8 (6*a*.)
Annual Report on the consumption of Stationery in Bengal during 1900-1901. F'cap. Paper cover. Rs. 3. (2*a*.)

GENERAL DEPARTMENT.

List of Officers in the Subordinate Educational Service, Bengal, corrected up to 1st April 1902. F'cap. Paper cover. 8*a*. (1*a*.)

JUDICIAL DEPARTMENT.

Question Papers set at the Pleadership and Muktearship Examinations for the year 1902. Royal 8vo. Paper cover. Price 2*a*. (1*a*.)

Question Papers set at the Examination of candidates for appointment as Sub-Inspectors of Police. July and November 1901. Royal 8vo. Paper cover. Price 5*a*. (1*a*.)

Question Papers set at the Examination of candidates for recruiting the staff of Superior Police Officers in Bengal and Assam, held in November 1901. Royal 8vo. Paper cover. Price 8*a*. (1*a*.)

LEGISLATIVE DEPARTMENT.

The Court of Wards' Act, 1879 (Bengal Act IX of 1879), in Hindi, as modified up to the 1st July 1901. Royal 8vo. Paper cover. Price 6*a* (1*a*.)

The Calcutta Port Act, 1890 (Bengal Act III of 1890), as modified up to 1st April 1902. Royal 8vo. Paper cover. Price 10*a*. (1*a*.)

MUNICIPAL DEPARTMENT.

Annual Returns of the Lunatic Asylums in Bengal with brief notes for the year 1901. Compiled by the Inspector-General of Civil Hospitals. F'cap. Paper cover. Price Re. 1. (2*a*.)

Account Rules under the Local Self-Government Act, Part VIII. F'cap. Paper cover. Price 8*a*. (.)

Annual Report of the Chemical Examiner's Department, Bengal, 1901. F'cap. Paper cover Price 8*a*. (2*a*.)

PUBLIC WORKS DEPARTMENT.

Distribution Return of Officers and Subordinates employed on Local Works in Bengal, corrected up to 31st December 1901. Super-royal 8vo. Paper cover. Price 2*a*. (1*a*.)

Embankment and Drainage Report of the Government of Bengal, Irrigation Department, for the year 1900-1901. F'cap. Boards Paper cover. Price Re. 1 (3*a*.)

Classified List and Distribution Return of Establishment corrected up to 31st March 1902. Super-royal 8vo. Paper cover. Price 4*a*. (1*a*.)

Dacca Electric Lighting License, 1902. F'cap. Paper cover. Price 14*a*. (1*a*.)

Notes on the construction of Railways in India (for students) with 5 charts. F'cap Paper cover. Price Re. 1. (1*a*.)

REVENUE DEPARTMENT.

Annual Report of the Burdwan Experimental Farm for the year 1900-1901. F'cap. Paper cover. Price 3*a*. (1*a*.)

Annual Report on the Survey Operations in Bengal during the year 1900-1901 (from 1st October 1900 to 30th September 1901). F'cap. Paper cover. Price Re. 1-8. (2*a*.)

Annual Report of the Director of the Department of Land Records, Bengal, on Settlements, for the year ending 30th September 1901. F'cap. Paper cover. Price 8*a*. (1*a*.)

The Practice and Procedure Manual, published under the authority of the Board of Reven Royal 8vo. Board. Paper cover. Price 12*a*. (3*a*).

OLDER PUBLICATIONS.

A General Catalogue of all Government Publications (corrected up to 31st December, 1901) may be obtained *gratis* on application to the Officer in charge, Bengal Secretariat Book Depôt.

Publications for sale at the office of the Chief Inspector of Explosives with the Government of India.

Rules for the manufacture, possession and sale of explosives issued by each of the Loca Governments and Administrations. Price 12*a*.

Rules for the transport and importation of explosives issued by the Government of India. Price 12*a*.

Rules for the transport and importation of explosives at the Port of Calcutta. Price 4*a*.

GOVERNMENT PUBLICATIONS FOR SALE

BY THE SUPERINTENDENT OF GOVERNMENT PRINTING, INDIA, 8 HASTINGS STREET, CALCUTTA.

[A General Catalogue of all Government Publications may be obtained gratis from the Government Central Press, Calcutta.]

All books published by the Superintendent of Government Printing, India, can be purchased, either directly or through the following or any other booksellers:—

AGENTS IN INDIA.

Messrs. Thacker, Spink & Co., Calcutta and Simla.
Messrs. Newman & Co., Calcutta.
Messrs. Higginbotham & Co., Madras.
Messrs Thacker & Co., Ld., Bombay.
Messrs. A J. Combridge & Co, Bombay.
Messrs. V. Kalyanarama Iyer & Co., Madras.
Messrs. D. B. Taraporevala, Sons & Co., Bombay.
Superintendent, American Baptist Mission Press, Rangoon.
Rai Sahib M. Gulab Singh and Sons, Mufid-I-Am Press, Lahore.
Manager, Educational Book Depôts, Nagpur and Jubbulpore.*
Manager of the Imperial Book Depôt, 63 Chandni Chauk Street, Delhi.*

AGENTS IN EUROPE.

Mr. E. A. Arnold, 37 Bedford Street, Strand, London.
Messrs. Constable & Co., 2 Whitehall Gardens, London.
Messrs. Sampson Low, Marston & Co., St. Dunstan's House, Fetter Lane, London.
Messrs. Luzac & Co., 46 Great Russel Street, London.
Messrs. Kegan Paul, Trench, Trübner & Co., Charing Cross Road, London.
Mr. B. Alfred Quaritch, 15 Piccadilly, London.
Messrs. P. S. King and Son, 2 & 4 Great Smith Street, Westminster.
Messrs. H. S. King & Co., 65 Cornhill, London, are also Agents for the sale of the Indian Army List.
Mr. Otto Harrassowits, Mr. Karl Hiersemann } Leipzig.
Messrs. R. Friedlander & Sohn, Berlin, N. W. Carlstrasse, 11.
Mr. Ernest Leroux, 28 Rue Bonaparte, Paris.
Mr. Martinus Nijhoff, the Hague, Holland.
Messrs. Williams and Norgate, Oxford.
Messrs. Deighton Bell & Co., Cambridge.

* Agents for sale of the Legislative Department publications.

NOTICE.—Books and Acts required for private use only can be purchased. Applications should be accompanied by a remittance, unless it is wished that the books should be sent by value-payable post, in which case, besides the ordinary postage, an additional charge is made for registration and commission.

Books and Acts required for the public service should be obtained through Local Governments to whom the applicant is subordinate.

Applications for Government publications which are no longer in print should be made to the Agents of the particular Government under whose orders they were originally issued.

The amounts within parentheses are for packing and postage

List of New Books published during the Current Quarter.

FINANCE AND COMMERCE DEPARTMENT.

List of Officers in the Finance and Commerce Department. Corrected to 1st May 1902. Royal 8vo. Paper cover. 4*a.* or 5*d.* (1*a.*)

STATISTICAL DEPARTMENT.

Review of the Trade of India in 1901-1902. F'cap. Paper cover. 8*a.* or 9*d.* (2*a.*)

MILITARY DEPARTMENT.

List of Light houses and Light-vessels in British India, including those in the Gulf of Aden as existing at the end of 1901. 21st Issue. Royal 8vo. Board. Re. 1 or 1*s.* 6*d.* (2*a.*)

List of Books published from January to June 1902.

LEGISLATIVE DEPARTMENT.

Chronological Tables of the Indian Statutes compiled, under the orders of the Government of India, by F. G. Wigley, Esq. Royal 8vo. Cloth. *Rs.* 4 or 6*s.* (7*a.*)

The Indian Penal Code (Act XLV of 1860), as modified up to the 1st July 1899, and with foot-notes brought down to 1st April 1901. *Rs.* 2-8 or 3*s.* 9*d.* (6*a.*)

The Indian Factories Act, 1881, as modified up to the 1st April 1891 (with foot-notes brought down to 1st July 1901). 5*a.* 6*p.* or 6*d.* (1*a.* 6*p.*)

Effect of Legislation for 1898, 1899, and 1900. *Re.* 1 or 1*s.* 6*d.* (2*a.*)

Chronological Tables of the Indian Statutes, 1901. *Re.* 1 or 1*s.* 6*d.* (2*a.*)

A Digest of Indian Law Cases, Vol. III. Cloth bound. *Rs* 12 or 18*s.* (10*a.*)

Ditto ditto ditto. Quarter bound. *Rs* 13 or 19*s.* 6*d.* (10*a.*)

Act IX of 1 01. An Act further to amend the Indian Articles of War. 1*a.* or 1*d.* (1*a.*)

Act X of 1901. An Act further to amend the Court-fees Act, 1870. 1*a.* 3*p* or 1*d.* (1*a.*)

Act XI of 1901. An Act to facilitate the cita-tion of certain Enactments and to amend and repeal certain obsolete Enactments.

Regulation III of 1901. A Regulation further to provide for the suppression of crime in certain frontier districts. 7*a.* 6*p.* or 9*d.* (1*a.* 6*p.*)

Regulation IV of 1901. A Regulation to make better provision for the suppression of murderous outrages in certain frontier tracts. 2*a.* 6*p.* (1*a.*)

Regulation V of 1901. A Regulation further to amend the Upper Burma Land and Revenue Regulation, 1899. 1*a.* 3*p.* or 2*d.* (1*a.*)

Regulation VI of 1901. A Regulation to re-peal so much as is unrepealed of the Punjab Frontier Regulation, 1872, and of the Hazara Settlement Rules, 1*a.* or 1*d* (1*a.*)

Regulation VII of 1901. A Regulation to alter certain of the laws in force in the North-West Frontier Province, to declare that certain Enactments are in force therein, and to bar the application of certain others hereto. 11*a.* or 1*s.* 3*d.* (2*a.*)

Corrigendum slip for Act XIII of 1900. 1*a*.

Title-page and Contents to Acts of 1901. 1*a*. 6*p*. (1*a*.)

Index to Acts of 1901. 2*a*. 9*p*. or 3*d*. (1*a*.)

The European Vagrancy Act, 1874 (IX of 1874), as modified up to 1st December, 1901. 6*a*. 6*p*. or 7*d*. (1*a*.)

The Chaukidars Act, 1856 (XX of 1856), as modified up to 1st December, 1901. 7*a*. 6*p*. or 8*d*. (1*a*.)

The Registration of Ships Act, 1841 and 1850 (X of 1841 and XI of 1850), as modified up to 1st December 1893, and with foot-notes brought down to 1st December, 1901. 7*a*. or 7*d*. (1*a*.)

Table showing the effect of Legislation in the Governor-General's Council during 1901. 6*a*. or 6*d*. (1*a*.)

LIST OF TRANSLATIONS AND TRANSLITERATIONS OF ACTS PUBLISHED FROM 1ST OCTOBER 1901 TO 31ST MARCH 1902.

The Cattle-trespass Act, 1871 (I of 1871), as modified up to the 1st April 1901. In Urdu. 2*a*. (1*a*.)

Ditto. In Hindi. 2*a*. (1*a*.)

Act IX of 1901 (an Act further to amend the Indian Articles of War). In Urdu. 3*p*. (1*a*.)

Ditto. In Hindi. 3*p*. 1*a*.

Act X of 1901 (an Act further to amend the Court-fees Act, 1870). In Urdu. 3*p*. (1*a*.)

Ditto. In Hindi. 3*p*. (1*a*.)

HOME DEPARTMENT.

Chronological Tables for 1902, embodying Notifications by the Government of Bengal and Government of India prescribing holidays during the year with corresponding dates in English, Bengali, Velati, Fusli, etc. Royal 8vo. Paper cover. 4*a*. or 4*d*. (1*a*.)

Annual Report of the Sanitary Commissioner with the Government of India, 1900, with Appendices and Returns of Sickness and Mortality among European Troops, Native Troops, and Prisoners in India, for the year. F'cap. Boards. *Rs*. 3 or 4*s*. 6*d*. (8*a*.)

Report of Proceedings of the Central Indigenous Drugs Committee of India, Volume I. Royal 8vo. Board. Rs. 3-8 or 5*s*. 3*d*. (7*a*.)

List of Europeans and others in the English Factories in Bengal at the time of the Siege of Calcutta in the year 1756, with an appendix containing lists of European Sufferers. By S. Charles Hill, Esq., B.A., B.SC. Super-Royal 4to. Paper cover. Rs. 2 or 3*s*. (3*a*.)

Judicial and Administrative Statistics for British India. 6th issue, 1900-1901, and preceding years. F'cap. Board. Re. 2 or 3*s*. (10*a*.)

The Countess of Dufferin's Fund Seventeenth Annual Report of the National Association for Supplying Female Medical Aid to the Women of India for the year 1901. Super-Royal 8vo. Re. 1 or 1*s*. 4*d*. (3*a*.)

DEPARTMENT OF REVENUE AND AGRICULTURE.

List of Officers in the Survey and other Scientific and Minor Departments subordinate to the Government of India in the Department of Revenue and Agriculture, corrected to 1st July 1901. Royal 8vo. Paper cover. 8*a*. or 9*d*. (2*a*.)

Report of the Committee on the Establishment of Co-operative Credit Societies in India. F'cap. Paper cover. 4*a*. or 5*d*. (2*a*.)

Forest Flora of the School Circle, North-Western Provinces, being a descriptive list of the indigenous woody plants of the Shaharanpur and Debra Dun districts and the adjoining portions of the Tehri-Garhwal State in the North-Western Provinces, with Analyses. Double-Crown. 16mo. Full cloth. Re. 1-8 or 2*s*. (3*a*.)

Archæological Exploration in Chinese Turkestan. By Dr. M. A. Stein. Royal 4to. Cloth. Rs. 4 or 6*s* (4*a*.)

Land Revenue Policy of the Indian Government. Royal 8vo. Cloth. 10*a*. or 1*s*. (4*a*.)

FOREIGN DEPARTMENT.

Report on the Administration of the Baluchistan Agency for 1900-1901. Re. 1-8 or 2*s*. 3*d*. (3*a*.)

Report on the Administration of the Hyderabad Assigned Districts for the year 1900-1901. F'cap. Limp cover. Rs. 3-12 or 5*s*. 6*d*. (6*a*.)

Report on the Political Administration of the territories within the Central India Agency for 1900-1901. F'cap. Limp cover. *Re*. 1-8 or 2*s*. (3*a*.)

Annotated Returns of the Dispensaries in Central India for 1900. F'cap. Limp cover. *Re*. 1-8 or 2*s*. (3*a*.)

Report on the Administration of the Civil and Military Station of Bangalore for the year 1900-1901. F'cap. Board. 8*a*. or 9*d*. (2*a*.)

Grammar and Vocabulary of Waziri Pashto. By J. G. Lorimer, Esq., I.C.S. Royal 8vo. Board. Rs. 3 or 4*s*. 6*d*. (5*a*.)

FINANCE AND COMMERCE DEPARTMENT.

List of Officers in the Finance and Commerce Department. Corrected to December 1901; to April 1902. 4*a*. or 5*d*. (1*a*.) each.

Papers relating to the proposed Establishment of a Central Bank in India. F'cap. Board. Re. 1 or 1*s*. 6*d*. (4*a*.)

Administration Report of the Mint at Bombay and Calcutta for 1900-1901. F'cap. Paper cover. Re. 1 or 1*s*. 6*d*. (2*a*.)

Schedule IV of the Indian Tariff Act (VIII of 1878) of 1902. Royal 8vo. Stitched. 6*a*. or 6*d*. (1*a*.)

STATISTICAL DEPARTMENT.

Trade and Navigation Accounts of British India for the months of December 1901 to May 1902. Royal 8vo. Stitched. 8*a*. or 9*d*. (2*a*.) each.

Accounts of the External Land Trade of British India for the months of September 1901 to March 1902. Royal 8vo. Stitched. 8*a*. or 9*d*. (2*a*.) each.

Accounts relating to the Trade carried by Rail and River in India in the quarter ending September 1901. Compared with the corresponding periods of the years 1899 and 1900 No. 2 of 1901-1902. F'cap. Paper cover. 8*a*. or 9*d*. (2*a*.)

Ditto ditto ending December 1901. Compared with the corresponding periods of the years 1899 and 1900. No 3 of 1901-1902. F'cap. Paper cover. 8*a*. or 9*d*. (2*a*.)

Accounts of the Trade of the French Possessions in India in the year ending 31st March 1901, and the four preceding years. F'cap. Paper cover. 2*a* or 3*d*. (1*a*.)

Statistics of Cotton Spinning and Weaving in the Indian Mills in January, February, and March 1902; in the ten months, April 1901 to January 1902; in the eleven months, April 1901 to February 1902, and in the twelve months, April 1901 to March 1902. Compared with the corresponding period of 1899-1900 and 1900-1901. Royal 8vo. Stitched. 2*a*. or 2*d*. (1*a*.) each.

Accounts of the Trade of Aden in the year ending 31st March 1901, and the four preceding years. F'cap. Paper cover. 10*a*. or 1*s*. (2*a*.)

Accounts of the Trade of the Portuguese Possessions in India in the year 1899-1900 and the four preceding years. F'cap. Paper cover. 2*a*. or 3*d*. (1*a*.)

Prices and Wages in India. Nineteenth issue, 1902. Super-Royal 4to. Board. Re. 1-8 or 2*s* (9*a*.)

COMPTROLLER-GENERAL.

Finance and Revenue Accounts of the Government of India for 1900-1901. F'cap. Board. Rs. 2 or 3*s*. (8*a*.)

Appropriation Report on the Accounts of the Government of India for 1900-1901. By A. F. Cox, Esq. F'cap. Board. 8*a*. (5*a*.)

MILITARY DEPARTMENT.

The Monthly Indian Army List for February to March, May, June 1902. Royal 8vo. Paper cover. Re 1-8 or 2*s.* 3*d.* (4*a.*) each.

Return of Wrecks and Casualties in Indian Waters for the year 1900. F'cap. Stiff cover. 12*a.* or 1*s.* (8*a.*)

Military Works Services Classified List and Distribution Return. Corrected up to 31st December 1901. Royal 8vo. Paper cover. 4*a.* or 6*d.* (1*a.*)

ndian Military Budget Estimate for the year 1902-1903. F'cap. Board. Re. 1-8 or 2*s.* 3d. (8*a.*)

PUBLIC WORKS DEPARTMENT.

Public Works Department Classified List and Distribution Return of Establishment. Corrected up to 31st December 1901. Super-Royal 8vo. Paper cover. Rs. 2 or 3*s.* (4*a.*)

Classified List (Public Works Department), Subordinate Establishment. Corrected up to 31st December 1901. Super-Royal 8vo. Paper cover. 4*a.* or 4*d.* (1*a.*)

Budget Estimate of the Indo-European Telegraph Department for the year 1902-1903. F'cap. Paper cover. 8*a.* or 9*d.* (1*a.* 6*p.*)

Budget Estimate of the Indian Telegraph Department for the year 1902-1903. F'cap. Paper cover. 8*a.* or 9*d.* (1*a.* 6*p.*)

History of Services of the Officers of the Engineer, Accounts, and State Railway Revenue Establishments. Corrected to 31st December 1901. In two Volumes. Royal 8vo Board. Vol. I, Rs. 2-8 or 3*s.* 9*d.* (6*a.*). Vol. II Rs. 2-8 or 8*s.* 9*d.* (6*a.*). Complete, Rs. 5 or 7*s.* 6*d.* (9*a.*)

List of new books for sale at the Thomason College, Roorkee, which were not advertised before.

Roorkee Treatise on "Railways," 4th Edition, revised by F. Wolley Dod, F.C.H. Price, Rs. 3 per copy.

Roorkee Treatise on "Irrigation Works." By Lieutenant-Colonel J. Clibborn, I.S.C., B.A., L.C.E., C.I.E. Price Rs. 9 per copy.

Roorkee Treatise on "Sanitary Engineering." Compiled by Lieutenant-Colonel J. Clibborn, I.S.C., B.A., L.C.E., C.I.E. Price, Rs. 4-8 per copy.

Roorkee Manual of "Applied Mechanics," Volume II. The stability of structures mostly by graphic methods, by Lieutenant-Colonel J. H. C. Harrison, R.E. Price, Rs. 8-2 per copy.

Roorkee Manual of Hydraulics. Price per copy, Re. 1-4. (No. XIX, Elementary Treatise). By E. F. Tipple, Esq., B.A.

Designs for Wooden Bridges, together with rules for calculating the area of waterway, &c., and Plates. By late Rai Bahadur Kunhya Lal. Price per set, Rs. 4-2

Pamphlet on Examination for Acid Radicals: Tables giving Analysis of Acids. Price per copy, 8*a.*

Pamphlet on Examination for Acid Bases: Tables giving Analysis of Metallic Bases. Price, 8*a.* per copy.

Pamphlet on Note on Masonry Arches (College publication). Price, 4*a.* per copy.

Pamphlet on Small Direct Well Pumping Installations. Price, 4*a.* per copy.

Pamphlet on Experiments made on the passage of water through the sand of the Chenab River at the Khanki Weir. By Lieutenant-Colonel J. Clibborn, I.S.C., C.A., L.C.E., C.I.E. Price per copy, 12*a.*

Indian Household Account Book for a period of two years, comprising Daily Table Expense Account, Bread, Butter and Milk Account, Dhobey's Account, Servants' Wages Account, etc. Price, Rs. 3 per copy.

Cash must accompany order. Articles are sent by V.-P. P. to persons in Government employment only.

Application is to be made to the Curator, Thomason College Book Depôt, Roorkee.

Half-yearly list of new books and periodicals for sale at the Library of the Asiatic Society of Bengal, 57 Park Street, Calcutta.

ASIATIC SOCIETY'S PUBLICATIONS.

Proceedings Nos. 9 to 11 of 1901 and No. 1 of 1902, at 8*a.*

Journal, Part I, No. 2 of 1901, at Rs. 2.

" Part II, No. 2 of 1901, at Rs. 2.

" Part III, No. 2 of 1901, and Part III, No. 1 of 1902, at Rs. 2.

BIBLIOTHECA INDICA.

Upamitibhavaprapancha Katha. Fasc. 4 at 6*a.*

Catapatha Brahmana. Vol. I, Fasc. 5, at 6*a.*

Varsakriya Kaumudi. Fasc. 3 and 4, at 6*a.*

Nityacarapaddhati. Fasc. 2 and 3, at 6*a.*

Apastamba Sranta Sutra. Vol. III, Fasc. 16, at 6*a.*

Mahabhasyaprodipodyata. Vol. II, Fasc. 2 and 3, at 6*a.*

Al-Muquddasai. (English.) Vol. I, Fasc. 2, at 12*a.*

NOTICE TO SUBSCRIBERS.

SUBSCRIBERS are hereby informed that, unless complain of non-receipt of any number is made to the Publisher of the series within three months of the date of publication, the benefits of the subscription rates for copies ost in transit will not be allowed, and full rates will be charged. The price per copy of each of the four series at subscription rates and at full rates is shown below —

	Per copy. Subscription rate. Town.			Mofussal.		
	Rs.	A.	P.	Rs.	A.	P.
Calcutta Series	0	8	9	0	10	3
Each of the Madras, Bombay and Allahabad Series ...	0	5	3	0	5	9

	Full rate. Town.			Mofussal.		
	Rs.	A.	P.	Rs.	A.	P.
Calcutta Series	2	0	0	2	0	0
Each of the Madras, Bombay and Allahabad Series ...	1	0	0	1	0	0

The Indian Law Reports.

Published under Authority.

THE Indian Law Report published under the authority of the Governor-General in Council, appear in monthly parts, published as soon as possible after the first of each month at Calcutta, Madras, Bombay, and Allahabad, and comprise four series—one for the Calcutta High Court, a second for the Madras High Court, a third for the Bombay High Court, and a fourth for the Allahabad High Court. The cases heard by the Privy Council on appeal rom each High Court are reported in the Series for that High Court. Cases heard by the Privy Council on appeal from Provinces in India not subject to any High Court are reported in the Calcutta Series.

The Calcutta Series is distributed by the Bengal Secretariat Book Depôt, and the Madras, Bombay, and Allahabad Series are distributed direct from Madras, Bombay, and Allahabad respectively.

In supersession of the previous advertisements, on and from the 1st January 1889 the terms of subscription and sale will be as follows for current issues as well as for back numbers of the reports from 1876:—

Terms of subscription payable annually in advance.

For the complete series, *including postage* (Inland rate) Rs. 22-8.

Ditto ditto (Overland rate) Rs. 28.

	Without postage. Rs.	A.	P.	With postage. Rs.	A.	P.
For the Calcutta Series	10	0	0	12	8	0
„ each of the Madras, Bombay, and Allahabad Series	6	0	0	7	0	0
„ a part of the Calcutta Series purchased separately (*inclusive of postage in India*)	.....			2	0	0
„ a part of each of the Madras, Bombay, and Allahabad Series purchased separately (*inclusive of postage in India*)	.....			1	0	0

The following are the rates at which deductions will be made for parts out of print and at which duplicate copies will be supplied to subscribers when required in place of copies lost in transit, provided complaint of non-receipt is made to the Publisher within three months of the date of publication :—

	For town. Rs.	A.	P.	For mufassal. Rs.	A.	P.
For the Calcutta Series, per copy ...	0	8	9	0	10	3
„ each of the Madras, Bombay, and Allahabad Series, per copy ...	0	5	3	0	5	9
„ the Calcutta Series. For the year	7	2	6	8	6	3
„ each of the Madras, Bombay and Allahabad Series. For the year	4	4	6	1	11	3

Persons desiring to subscribe for or purchase the Report should apply to—

The Superintendent, Government Press, Madras.
„ Superintendent, Government Central Press, Bombay.
„ Curator of Government Books, North-Western Provinces and Oudh.
„ Officer in charge, Bengal Secretariat Book Depôt.

Orders and subscriptions for 1902 should be at once registered and remitted by money-order payable to the Treasurer, Bengal Secretariat, Calcutta.

ADVERTISEMENTS will be received for publication on the wrappers of the Indian Law Reports, Calcutta Series, at the following rates, payable in advance—

	One page. Rs.	Half page. Rs.	Quarter page. Rs.
For one issue ...	20	14	9
„ three issues ...	55	36	4
„ six „ ...	100	68	45
„ nine „ ...	145	96	64
„ twelve „ ...	180	12	80

SEVERAL volumes of the BENGAL LAW REPORTS, from August 1868 to December 1875, and FULL BENCH RULINGS, Parts I and II, are available at the following rates:—

	Without postage. Rs.	A.	P.	With postage. Rs.	A.	P.
Benga Law Reports, for one year ... Single copies, Rs. 2 per copy.	0			22	8	0
Full Bench Rulings, Parts I and II ...	20	0	0	22	8	0

Obtainable at the Bengal Secretariat Book Depôt, Writers' Buildings, Calcutta.

Remittances to be forwarded to the Treasurer, Bengal Secretariat, Writers' Buildings, Calcutta.

The complete series of the INDIAN LAW REPORTS for the years 1876 to 1885, 1887, and 1890 to 1901 having now been reprinted, are available, and may be purchased for all the years, or any particular year, on application to the Officer in charge, Bengal Secretariat Book Depôt.

The wanting parts of the Reports for the remaining years are being reprinted, and complete Reports from the beginning to date will be available shortly. The subscription, Rs. 22-8 per annum, should be remitted in advance to the Treasurer, Bengal Secretariat.

Notice.

THE *CALCUTTA GAZETTE.*

The 1st March 1901.—From this date the subscription to, and postage for, the *Calcutta Gazette* will be at the following rates, payable in advance:—

PER ANNUM.	For Calcutta. Rs.	A.	For the Mufussal, including postage. Rs.	A.
Entire *Gazette*	15	0	20	0
Parts I, IA and IB together ...	5	0	7	8
Part II	1	0	2	12
Parts III, IV and IVA together	4	0	6	0
„ V and VI together ..	2	0	3	0
Appendix (Marine Notifications)	1	0	2	12
Supplement	5	0	7	8
PER ISSUE.				
Entire *Gazette*	0	8	0	10
Supplement	0	4	0	5

N. B.—Separate Parts of each issue of the *Gazette*, and occasionally important Rules and Extracts, can be obtained from the Officer in charge, Bengal Secretariat Book Depôt, at the rate of one anna for every sixteen pages or a fraction thereof. Postage according to weight.

RATES FOR ADVERTISEMENTS in the *Calcutta Gazette*:—

Full page, per issue	Rs. 20
Half „ „ „	„ 10

Casual advertisements, 4 annas per line.

Annual Statement of the Sea-borne Trade and Navigation of the Bengal Presidency and of its Chief Port (Calcutta), and each of its Subordinate Ports Chittagong, Balasore, Cuttack, Pooree, and Narainguge), Volumes I and II. Price Rs. 20 for 1899, 1900. Published at the Calcutta Custom House Previous years' volumes can also be obtained at the same price.

APPENDIX TO

The Calcutta Gazette.

WEDNESDAY, JULY 16, 1902.

NOTICES TO MARINERS.

GOVERNMENT OF BENGAL—MARINE DEPARTMENT.

NOTICE TO MARINERS—No. 202.

[First Publication.]

INDIA, WEST—BOMBAY COAST.

Rájpuri point—Whale reef buoy removed.

THE Bombay Government has given notice (No. 73 of 1902) that the red buoy on the north side of the 'Whale Reef' off Rájpuri Point was removed for the south-west monsoon on the 30th ultimo.

E. J. BEAUMONT, COMDR., R.I.M.,
Port Officer of Calcutta.

Published for general information.

C. B. BAYLEY,
CALCUTTA, *the 7th July 1902.* *Asst. Secy., Marine Department.*

GOVERNMENT OF BENGAL—MARINE DEPARTMENT.

NOTICE TO MARINERS—No. 203.

[First Publication.]

BAY OF BENGAL—BURMA COAST.

Rangoon river—Buoy placed to mark the Middle bank extension.

THE Bombay Government has given notice (No. 75 of 1902) that information has been received from the Principal Port Officer, Rangoon, dated 11th June 1902, that a third-class Can Buoy with Staff and St. George's Cross has been placed N. 53° E. (magnetic) distance 4·6 cables from 'Dark foliaged tree' on east side of the entrance to 'Deserters' Creek.

This tree has a pole with two balls on it.

E. J. BEAUMONT, COMDR., R.I.M.,
Port Officer of Calcutta.

Published for general information.

C. B. BAYLEY,
CALCUTTA, *the 7th July 1902.* *Asst. Secy., Marine Department.*

GOVERNMENT OF BENGAL—MARINE DEPARTMENT.

NOTICE TO MARINERS—No. 204.

[First Publication.]

BAY OF BENGAL—BURMA COAST.

Rangoon river—Upper Hastings Channel buoy relaid.

THE Bombay Government has given notice (No. 76 of 1902) that information dated 14th June 1902 has been received from the Principal Port Officer, Rangoon, that the Upper Hastings Channel Buoy has been relaid 300 feet N. 36° W. (magnetic) of its former position in 6 feet reduced.

This Notice affects the following Admiralty Chart :—Rangoon River and Approaches, No. 833, and Bay of Bengal Pilot, 3rd edition, 1901, page 353.

E. J. BEAUMONT, COMDR., R.I.M.,
Port Officer of Calcutta.

Published for general information.

C. B. BAYLEY,
Asst. Secy., Marine Department.

CALCUTTA, *the 7th July 1902.*

GOVERNMENT OF BENGAL—MARINE DEPARTMENT.

NOTICE TO MARINERS—No. 205.

[First Publication.]

INDIA, WEST—BOMBAY COAST.

Certain buoys removed for the S. W. monsoon.

THE Bombay Government has given notice (No. 77 of 1902) that the undermentioned buoys were removed from their positions on the dates noted against each :—

Alibág Buoy	16th May 1902.
Bánkot Buoy	18th " "
Anjanvel Buoy	20th " "
Ambulgad Reef Buoy (Jaitápur)	18th " "
Chaldea Rock Buoy	16th " "
Málvan outer Rock Buoy	19th " "
Johnston Castle Buoy	20th " "
Málvan Harbour Buoys	21st " "
Vengurla Harbour Buoys	16th " "
Kárwár Harbour Buoys	20th " "
S.S. *Brahmani* Wreck Buoy	27th " "

E. J. BEAUMONT, COMDR., R.I.M.,
Port Officer of Calcutta.

Published for general information.

C. B. BAYLEY,
Asst. Secy., Marine Department.

CALCUTTA, *the 7th July 1902.*

GOVERNMENT OF BENGAL—MARINE DEPARTMENT.

NOTICE TO MARINERS—No. 206.

[First Publication.]

AUSTRALIA—CORAL SEA.

Bellona reefs—Reefs reported to the eastward.

THE British Admiralty has given notice (No. 363 of 1902) that the Master of the schooner *Waiwera* reports having seen to the eastward of the Bellona reefs a reef about 3½ miles long, enclosing a lagoon, the northern end of the reef being in about lat. 20° 32′ S., long. 159° 35′ E. On the reef was a sandy cay.

Also, another reef, on which was seen the wreck of a wooden vessel, in about lat. 21° 25′ S., long. 159° 27′ E.

This Notice affects the following Admiralty Charts :—Pacific ocean, No. 780; Coral sea No. 2763 : Also, Australia Directory, vol. II, 1898, page 532.

E. J. BEAUMONT, COMDR., R.I.M.,
Port Officer of Calcutta.

Published for general information.

C. B. BAYLEY,
Asst. Secy., Marine Department.

CALCUTTA, *the 12th July 1902.*

GOVERNMENT OF BENGAL—MARINE DEPARTMENT.

NOTICE TO MARINERS—No. 207.

[First Publication.]

EASTERN ARCHIPELAGO—JAVA, EAST COAST.

Banjuwangi—Light established—Prohibited anchorage.

THE British Admiralty has given notice (No. 365 of 1902) that a *red fixed* light, visible from a distance of 3 miles, has been established upon an iron framework support 19 feet high, painted white, erected at a distance of about 1¼ cables S. 74° E. from the lighthouse at Banjuwangi.

This light, in line with the principal light N. 74° W., marks the southern limit of the anchorage, and vessels are prohibited from anchoring to the southward of it on account of the telegraph cables.

Approximate position, lat. 8° 13′ S., long. 114° 23′ E.

(*Variation 1° Easterly in 1902.*)

This Notice affects the following Admiralty Charts:—Surabaya strait, No. 934; plan of Banjuwangi on Chart No. 932: Also, List of Lights, part VI, 1902, page 94; Eastern Archipelago, part II, 1893, page 167; and Supplement, 1899, page 21.

E. J. BEAUMONT, COMDR., R.I.M.,
Port Officer of Calcutta.

Published for general information.

C. B. BAYLEY,
Asst. Secy., Marine Department.

CALCUTTA, *the 12th July 1902.*

GOVERNMENT OF BENGAL—MARINE DEPARTMENT.

NOTICE TO MARINERS—No. 208.

[First Publication.]

EASTERN ARCHIPELAGO—SUMATRA, SOUTH-WEST COAST.

Maki bay—Reef reported.

THE British Admiralty has given notice (No. 366 of 1902) that a reef with a depth of 3¼ fathoms over it is reported to exist in the approach to Maki bay, situated with Batu Tonkah point bearing N. 7° W., distant 5 cables, and pulo Sukodono S. 52° E.

Approximate position, lat. 3° 24¼′ N., long. 97° 3¼′ E.

Depths of from 7 to 8 fathoms surround this reef.

(*Variation 1° Easterly in 1902.*)

This Notice affects the following Admiralty Chart:—Acheh head to Tyingkok bay, No. 2760: Also, China Sea Directory, vol. I, 1896, page 273.

E. J. BEAUMONT, COMDR., R.I.M.,
Port Officer of Calcutta.

Published for general information.

C. B. BAYLEY,
Asst. Secy., Marine Department.

CALCUTTA, *the 12th July 1902.*

GOVERNMENT OF BENGAL—MARINE DEPARTMENT.

NOTICE TO MARINERS—No. 209.

[First Publication.]

CHINA, SOUTH-EAST COAST—MIRS BAY.

Long harbour—Shoals.

THE British Admiralty has given notice (No. 368 of 1902) of the existence of the undermentioned shoals in Long Harbour, Mirs bay:—

1. A shoal composed of stones and sand, with a depth of 12 feet over it at low water springs, extending for a distance of 1¾ cables from the western side of Grass island; the western extremity of this shoal is steep to and situated with the western extremity of Grass island bearing N. 2° W., distance 3 cables, and Sam mau shak N. 79° W.
2. A rock, circular in shape and 75 yards in diameter, with a depth of 4½ fathoms over it at low water springs, situated with the western extremity of Grass island bearing N. 33° E., distant 6$\frac{1}{10}$ cables, and Sam mau shak N. 31° W.
   This rock is steep to.

3. A rock, with a depth of 4 feet over it at low water springs, situated with the western extremity of Grass island bearing N. 13° W., distant 7 cables, and Sam mau shak N. 56° W.

This rock is steep to on its northern side, the 5-fathom contour line extends 45 yards to the westward of it.

4. A rock, circular in shape and 35 yards in diameter, with a depth of 4½ fathoms over it at low water springs, situated with western extremity of Grass island bearing N. 3° W., distant 8½ cables, and Sam mau shak N. 41° W.

This rock is steep to.

Approximate position, western extremity of Grass island, lat. 22° 29′ N., long. 114° 21′ E.

(*Variation 1° Easterly in 1902.*)

This Notice affects the following Admiralty Charts:—Macao to Pedro Blanco, No. 3026; Mirs bay, No. 1964: Also, China Sea Directory, vol. III, 1894, page 126; and Supplement, 1898, page 14.

E. J. BEAUMONT, COMDR., R.I.M.,
Port Officer of Calcutta.

Published for general information.

C. B. BAYLEY,
Asst. Secy., Marine Department.

CALCUTTA, *the 12th July 1902.*

GOVERNMENT OF BENGAL—MARINE DEPARTMENT.

NOTICE TO MARINERS—No. 210.

[First Publication.]

NEW ZEALAND—NORTH ISLAND, EAST COAST.

Firth of Thames, Middle bank—Its non-existence.

THE British Admiralty has given notice (No. 370 of 1902) that a very careful but unsuccessful search has been made for Fishing or Middle bank, Firth of Thames, and that depths of 14 fathoms and upwards were found everywhere near the reported position; this shoal, on which there was supposed to be a depth of 3 fathoms, has therefore been expunged from the Charts.

Approximate position, lat. 36° 54¾′ S., long. 175° 21′ E.

This Notice affects the following Admiralty Chart:—Tutukaka harbour to Mayor island, No. 2543: Also, New Zealand Pilot, 1901, page 112.

E. J. BEAUMONT, COMDR., R.I.M.,
Port Officer of Calcutta.

Published for general information.

C. B. BAYLEY,
Asst. Secy., Marine Department.

CALCUTTA, *the 12th July 1902.*

GOVERNMENT OF BENGAL—MARINE DEPARTMENT.

NOTICE TO MARINERS—No. 211.

[First Publication.]

PACIFIC OCEAN—LUZON, WEST COAST.

Lingayen gulf—Shoal reported.

THE British Admiralty has given notice (No. 371 of 1902) of the existence of a coral reef about one-third of a mile long, and with a depth of 2½ fathoms over it in the entrance to Lingayen gulf, situated with San Fernando point lighthouse bearing N. 1° W., distant 2½ miles.

Approximate position, lat. 16° 35½′ N., long. 120° 17′ E.

(*Variation Nil in 1902.*)

This Notice affects the following Admiralty Chart:—The island of Luzon, No. 2454 Also, Eastern Archipelago, part I, 1890, page 43; Revised Supplement, 1898, relating to that work, page 4; China Sea Directory, vol. II, 1899, page 323; and Supplement, 1901, page 13.

E. J. BEAUMONT, COMDR., R.I.M.,
Port Officer of Calcutta.

Published for general information.

C. B. BAYLEY,
Asst. Secy., Marine Department.

CALCUTTA, *the 12th July 1902.*

GOVERNMENT OF BENGAL—MARINE DEPARTMENT.

NOTICE TO MARINERS—No. 212.

[First Publication.]

NEW ZEALAND—NORTH ISLAND, EAST COAST.

Hauraki gulf—Rock on the westward of Rakino island.

THE British Admiralty has given notice (No. 372 of 1902) of the existence of a rock, with a depth of 4 feet over it at low water springs, situated with the summit (195 feet) of Rakino island bearing S. 71° E., distant 8¼ cables, and the western extremity of Tapu island S. 26° W.

Approximate position on Chart No. 1896, lat. 36° 43′ S., long. 174° 55¾′ E.

(*Variation 14° Easterly in 1902.*)

This Notice affects the following Admiralty Charts:—Tutukaka harbour to Mayor island, No. 2543; Entrance to Auckland harbour, No. 1896: Also, New Zealand Pilot, 1901, page 49.

E. J. BEAUMONT, COMDR., R.I.M.,
Port Officer of Calcutta.

Published for general information.

C. B. BAYLEY,
CALCUTTA, *the 12th July 1902.* *Asst. Secy., Marine Department.*

GOVERNMENT OF BENGAL—MARINE DEPARTMENT.

NOTICE TO MARINERS—No. 213.

[First Publication.]

AUSTRALIA—TORRES STRAITS, INNER ROUTE.

Tih Tih reef—Beacon re-erected.

THE Portmaster, Brisbane, has given notice (No. 4 of 1902) that the Beacon on Tih Tih Reef reported to be down has now been re-erected.

Chart affected—No. 2921; Australia Directory, vol. 2.

E. J. BEAUMONT, COMDR., R.I.M.,
Port Officer of Calcutta

Published for general information.

C. B. BAYLEY,
CALCUTTA, *the 12th July 1902.* *Asst. Secy., Marine Department.*

GOVERNMENT OF BENGAL—MARINE DEPARTMENT.

NOTICE TO MARINERS—No. 214.

[First Publication.]

AUSTRALIA—FITZROY RIVER.

Upper Flats lightship—Discontinuance of tide signals.

THE Acting Portmaster, Brisbane, has given notice (No. 5 of 1902) that the improvements in this portion of the Fitzroy River having rendered tide signals no longer necessary, notice is hereby given that on and after 30th June they will not be exhibited from the Lightship.

Chart affected—No. 363; Australia Directory, vol. 2.

E. J. BEAUMONT, COMDR., R.I.M.,
Port Officer of Calcutta.

Published for general information.

C. B. BAYLEY,
CALCUTTA, *the 12th July 1902.* *Asst. Secy., Marine Department.*

GOVERNMENT OF BENGAL—MARINE DEPARTMENT.

NOTICE TO MARINERS—No. 215.

[First Publication.]

AUSTRALIA—INSKIP POINT.

Discontinuance of Pilot service.

THE Portmaster, Brisbane, has given notice (No. 6 of 1902) that, on and after the 30th instant, the Pilot Service at Inskip Point will be discontinued.

Vessels leaving Brisbane, and requiring the services of a Pilot through Sandy Straits, are requested to give notice to the Marine Department at least twenty-four hours before departure.

Vessels from the North are requested to give similar notice to the Harbour Office, Rockhampton or Townsville.

Chart affected—No. 1068; Australia Directory, vol. 2.

E. J. BEAUMONT, COMDR., R.I.M.,
Port Officer of Calcutta.

Published for general information.

C. B. BAYLEY,
CALCUTTA, *the 12th July 1902.* *Asst. Secy., Marine Department.*

GOVERNMENT OF BENGAL—MARINE DEPARTMENT.

NOTICE TO MARINERS—No. 190.

[Second Publication.]

PACIFIC OCEAN—FIJI ISLAND.

Kadavu—The light at Cape Washington installed.

WITH reference to Notice to Mariners issued by this office, No. 58, dated the 8th March 1902, the Acting Receiver-General, Suva, has given further notice, dated the 10th May 1902, that on the 1st March 1902 the light was installed in the light-house at Cape Washington, the most westerly point of the island of Kadavu (latitude 19° 6′ S., longitude 177° 58′ E.).

The height of the light is 202 feet above high-water level.

The light is a Fourth Order White Dioptric Fixed Light, and is visible between the magnetic bearings of S. 3° W. through W. to N. 13° E.

E. J. BEAUMONT, COMDR., R.I.M.,
Port Officer of Calcutta.

Published for general information.

C. B. BAYLEY,
CALCUTTA, *the 30th June 1902.* *Asst. Secy., Marine Department.*

GOVERNMENT OF BENGAL—MARINE DEPARTMENT.

NOTICE TO MARINERS—No. 191.

[Second Publication.]

PACIFIC OCEAN—FIJI ISLANDS.

Koro island—The light on Vunuku point installed.

WITH reference to Notice to Mariners No. 131, dated the 13th May 1902, issued by this office, the Acting Receiver-General, Suva, has given further notice that on the 1st March 1902 the light was installed in the light-house at Vunuku, the most easterly point of the island of Koro (latitude 17° 22′ S., longitude 179° 26′ E.).

The height of the light is 187 feet above high-water level.

The light is a Fourth Order Red Dioptric Fixed Light, and is visible between the magnetic bearings of S. 40° W. through E. to N. 40° E.

E. J. BEAUMONT, COMDR., R.I.M.,
Port Officer of Calcutta.

Published for general information.

C. B. BAYLEY,
CALCUTTA, *the 30th June 1902.* *Asst. Secy., Marine Department.*

GOVERNMENT OF BENGAL—MARINE DEPARTMENT.

NOTICE TO MARINERS—No. 192.

[Second Publication.]

PACIFIC OCEAN—FIJI ISLANDS.

Wailagilala—The light replaced.

WITH reference to Notice to Mariners No. 58, dated the 8th March 1902, issued by this office, the Acting Receiver-General, Suva, has given further notice that on the 10th April 1902 the Catoptric Light at Wailagilala (latitude 16° 45′ S., longitude 179° 6′ W.) was replaced by a Fourth Order White Dioptric Fixed Light, which is visible between the magnetic bearings of N. 64° E. through N. to S. 42° W.

The height of the light is 95 feet above high-water level.

E. J. BEAUMONT, COMDR., R.I.M.,
Port Officer of Calcutta.

Published for general information.

C. B. BAYLEY,
CALCUTTA, *the 30th June 1902.* *Asst. Secy., Marine Department.*

GOVERNMENT OF BENGAL—MARINE DEPARTMENT.

NOTICE TO MARINERS—No. 193.

[Second Publication.]

PACIFIC OCEAN—FIJI ISLANDS.

Wakaya reef—Light-house erected.

WITH reference to Notice to Mariners No. 131, dated the 13th May 1902, issued by this Office, the Acting Receiver-General, Suva, has given further notice that a new wooden structure has been erected on the south point of the Wakaya reef. The height of the building is 86 feet above low-water level.

The light will be a Third Order White Dioptric, visible round an arc of the horizon of 230° to the southward.

It is expected that the light will be installed about 31st July 1902, due notice of which will be given.

E. J. BEAUMONT, COMDR., R.I.M.,
Port Officer of Calcutta.

Published for general information.

C. B. BAYLEY,
CALCUTTA, *the 30th June 1902.* *Asst. Secy., Marine Department.*

GOVERNMENT OF BENGAL—MARINE DEPARTMENT.

NOTICE TO MARINERS—No. 194.

[Second Publication.]

INDIA, SOUTH-EAST—CEYLON COAST.

Chuttram—A fixed white light exhibited from a mast.

THE Presidency Port Officer, Madras, has given notice (No. 37 of 1902) that from and after 1st September 1902, a fixed white light, visible from all directions seawards, will be exhibited from a mast near "Chuttram" in longitude 80° 37′ and latitude 9° 12′ as a guide to vessels making the port of Pámban from the south.

E. J. BEAUMONT, COMDR., R.I.M.,
Port Officer of Calcutta.

Published for general information.

C. B. BAYLEY,
CALCUTTA, *the 30th June 1902.* *Asst. Secy., Marine Department.*

GOVERNMENT OF BENGAL—MARINE DEPARTMENT.

NOTICE TO MARINERS—No. 195.

[Second Publication.]

NEW ZEALAND—North island, east coast.

Poverty bay—Position of Hawea buoy altered.

With reference to Notice to Mariners No. 94, dated 12th April last, issued by this office, the British Admiralty has given further notice (No. 336 of 1902) that on 24th April 1902, the red buoy marking Hawea rock, Poverty bay, would be moved about 2¾ cables S. 46° E. to a position southward of the rocks recently discovered from which Gisborne flagstaff bears No. 4° E., distant 12$\frac{6}{10}$ cables, and Pah hill N. 65° E.

Approximate position of Gisborne flagstaff, lat. 38° 39¾′ S., long. 178° 2¼′ E.

(*Variation 14° Easterly in 1902.*)

This Notice affects the following Admiralty Chart:—Poverty Bay, No. 6163: Also, New Zealand Pilot, 1901, page 150.

E. J. Beaumont, Comdr., r.i.m.,
Port Officer of Calcutta.

Published for general information.

C. B. Bayley,
Asst. Secy., Marine Department.

Calcutta, *the 5th July 1902.*

GOVERNMENT OF BENGAL—MARINE DEPARTMENT.

NOTICE TO MARINERS—No. 196.

[Second Publication.]

CHINA—Hong Kong.

Lye mun point—Position of light. Hong Kong harbour—Prohibited anchorage.

With reference to Notice to Mariners No. 68, dated the 10th March last, issued by this office, the British Admiralty has given further notice (No. 337 of 1902) that the position of the *fixed red* light, exhibited from a gibbet on the shore near Lye mun point, is 3¼ cables N. 72° E. from Kung am.

Approximate position, lat. 22° 17¼′ N., long. 114° 14¼′ E.

Also, that anchorage is prohibited in the vicinity of the telegraph cable crossing the harbour from near the Admiralty Dock at Kaulung to a position west of north point Hong Kong. The prohibited area is marked by beacons which have been moved as under:—

At Kaulung—

The eastern beacon has been shifted 300 feet S. 79° E. from its former position.
The western beacon has been shifted 540 feet S. 72° W. from its former position.

At Hong Kong—

The eastern beacon has been moved 310 feet N. 55° E. from its former position.
The western beacon remains unaltered.

The red lights exhibited from these becons are screened as before, viz., so that when two lights on the same side of the harbour are visible anchorage is prohibited.

Approximate position, lat. 22° 18′ N., long. 114° 10′ E.

(*Variation 1° Easterly in 1902.*)

This Notice affects the following Admiralty Charts:—Hong Kong, Nos. 1459, 1466: Also, List of Lights, part VI, 1902, Nos. 705, 706, page 127; China Sea Directory, vol. III, 1894, pages 77, 82, 83; and Supplement, 1898, page 9.

E. J. Beaumont, Comdr., r.i.m.,
Port Officer of Calcutta.

Published for general information.

C. B. Bayley,
Asst. Secy., Marine Department.

Calcutta, *the 5th July 1902.*

GOVERNMENT OF BENGAL—MARINE DEPARTMENT.

NOTICE TO MARINERS—No. 197.

[Second Publication.]

PACIFIC OCEAN—PHILIPPINE ISLANDS, MINDANAO, SOUTH COAST.

Sibuguei and Dumankilas bays—Shoals.

WITH reference to Notice to Mariners No. 249, dated 28th September 1900, issued by this office, the British Admiralty has given further notice (No. 349 of 1902) that a shoal was seen about 3 miles N. 67° W. from Circe shoal in the entrance to Sibuguei bay.

Approximate position, lat. 7° 19′ N., long. 122° 36′ E.

It has been placed on the Charts as a rock with less than 6 feet over it.

Also, that four shoals, with apparently (for they were not examined) depths of 2 to 4 fathoms over them, were observed between Arayat shoal and point Dumankilas.

Approximate position, point Dumankilas, lat. 7° 28′ N, long. 123° 11′ E.

Approximate position, Arayat shoal, lat. 7° 16′ N., long 122° 57′ E.

A note to this effect has been placed on the Chart.

(Variation 1° Easterly in 1902)

This Notice affects temporarily the following Admiralty Charts:—The Philippine islands, No. 943; Sulu sea, No. 2578: Also, Eastern Archipelago, part I, 1890, pages 356, 357, 358 and Revised Supplement, 1898, page 69.

E. J. BEAUMONT, COMDR., R.I.M.,
Port Officer of Calcutta.

Published for general information.

C. B. BAYLEY,
Asst. Secy., Marine Department.

CALCUTTA, *the 5th July 1902.*

GOVERNMENT OF BENGAL—MARINE DEPARTMENT.

NOTICE TO MARINERS—No. 198.

[Second Publication.]

AUSTRALIA, SOUTH—ST. VINCENT GULF.

Port Adelaide and Glenelg jetty lights—Alterations postponed.

WITH reference to Notice to Mariners No. 8, dated 6th January 1902, issued by this office, the British Admiralty has given further notice (No. 341 of 1902) that the alterations contemplated in the lights at Semaphore jetty and Glenelg have been postponed, and that the *green fixed* light on the end of the Semaphore jetty and the *red fixed* light at the end of Glenelg jetty, port Adelaide, will continue to be exhibited until further Notice.

Approximate position, Semaphore jetty, lat. 34° 51′ S., long. 138° 29′ E.

This Notice affects the following Admiralty Charts:— St. Vincent and Spencer gulfs, Nos. 2389a, 2389b; approaches to port Adelaide, No. 1752; port Adelaide, No. 1750: Also, List of Lights, part VI, 1902, Nos. 1075, 1076; Australian Directory, vol. I, 1897, pages 326 and 324.

E. J. BEAUMONT, COMDR., R.I.M.,
Port Officer of Calcutta.

Published for general information.

C. B. BAYLEY,
Asst. Secy., Marine Department.

CALCUTTA, *the 5th July 1902.*

GOVERNMENT OF BENGAL—MARINE DEPARTMENT.

NOTICE TO MARINERS—No. 199.

[Second Publication.]

BAY OF BENGAL—CHITTAGONG COAST.

Karnafuli river—Dolphin shoal buoy adrift.

A TELEGRAPHIC communication has been received from the Port Officer, Chittagong, stating that Dolphin shoal buoy has gone adrift. It will be replaced shortly.

E. J. BEAUMONT, COMDR., R.I.M.,
Port Officer of Calcutta.

Published for general information.

C. B. BAYLEY,
Asst. Secy., Marine Department.

CALCUTTA, *the 5th July 1902.*

GOVERNMENT OF BENGAL—MARINE DEPARTMENT.

NOTICE TO MARINERS—No. 200.

[Second Publication.]

BAY OF BENGAL—Burma coast.

Rangoon river—Extension of the Middle Bank.

The Bombay Government has given notice (No. 70 of 1902) that the Middle Bank has extended into the Channel between the Upper and Centre Buoys as under:—

(*a*) 18 feet reduced is 600 feet outside a line drawn between the above buoys.
(*b*) 14 feet reduced is 300 feet outside the above line.
(*c*) The extension is about half way between the above buoys and will be marked on 3rd or 4th June 1902 by a red conical buoy with a Staff and St. George's Cross moored between the Upper and Centre Middle Bank Buoys.

This Notice affects the Admiralty Chart:—Rangoon River and Approaches, No. 833, and Bay of Bengal Pilot, 3rd Edition, 1901, page 353.

E. J. Beaumont, Comdr., r.i.m.,
Port Officer of Calcutta.

Published for general information.

C. B. Bayley,
Calcutta, *the 5th July 1902.* *Asst. Secy., Marine Department.*

GOVERNMENT OF BENGAL—MARINE DEPARTMENT.

NOTICE TO MARINERS—No. 201.

[Second Publication.]

INDIA, WEST—Sind coast.

Karachi harbour—Breakwater light extinguished.

The Bombay Government has given notice (No. 71 of 1902) that the fixed red light shown from the outer end of the Breakwater on Manora Point has been temporarily extinguished.

This Notice affects the Admiralty Chart:—Karachi Harbour, No. 40, and West Coast of Hindustan Pilot, 4th Edition, 1898, page 303.

E. J. Beaumont, Comdr., r.i.m.,
Port Officer of Calcutta.

Published for general information.

C. B. Bayley,
Calcutta, *the 5th July 1902.* *Asst. Secy., Marine Department.*

GOVERNMENT OF BENGAL—MARINE DEPARTMENT.

NOTICE TO MARINERS—No. 184.

[Third Publication.]

AFRICA, EAST COAST—Port Mombasa.

Light established on leading beacon.

The British Admiralty has given notice (No. 304 of 1902) that on 10th April 1902, a *red fixed* dioptric light, elevated 68 feet above high water, and visible from a distance of 7 miles from the bearing of S. 60° W., through west and north, to N. 20° E., would be exhibited from the front or south-eastern black and white pillar on Ras Serani, port Mombasa.

This light in line with the white fixed light exhibited from the rear pillar, N. 51° W., leads through the fairway into the port.

Approximate position, lat. 4° 4½′ S., long. 39° 41′ E.

(*Variation 8° Westerly in 1902.*)

This Notice affects the following Admiralty Chart:—Port Mombasa, No. 666: Also, List of Lights, part VI, 1902, page 18; Africa Pilot, part III, 1897, page 491; and Supplement, 1900, page 31.

E. J. Beaumont, Comdr., r.i.m.,
Port Officer of Calcutta.

Published for general information.

C. B. Bayley,
Calcutta, *the 28th June 1902.* *Asst. Secy., Marine Department.*

GOVERNMENT OF BENGAL—MARINE DEPARTMENT.

NOTICE TO MARINERS—No. 185.

[Third Publication.]

AUSTRALIA, WEST—FREMANTLE.

Intended alteration in lights.

THE British Admiralty has given notice (No. 305 of 1902) that it is proposed to make the following alterations in the lights exhibited on the North and South breakwaters, Fremantle:—

(1) The white fixed light on the North breakwater will be altered to a *green fixed* light, elevated 46 feet above high water, and visible in clear weather from a distance of 12 miles. The light will be of the 4th order, and shown from an iron cylindrical tower, painted white.

(2) The light on the South breakwater will be altered to a *white occulting* light *every five seconds*, thus:—light, *three seconds*; eclipse, *two seconds*; and it will be elevated 44 feet above high water. The light will be dioptric of the 4th order, and shown from a cylindrical tower painted white.

Approximate position, lat. 32° 3′ S, long. 115° 44′ E.

Further notice will be given when these alterations are made.

This Notice affects the following Admiralty Charts:—Rottnest island to Warnbro' sound, No. 1058; Fremantle harbour, No. 1700: Also, List of Lights, part VI, 1902, Nos. 1041a, b; Australia Directory, vol. III, 1895, page 362; and Supplement, 1898, page 8.

E. J. BEAUMONT, COMDR., R.I.M.,
Port Officer of Calcutta.

Published for general information.

C. B. BAYLEY,
CALCUTTA, *the 28th June 1902.* *Asst. Secy., Marine Department.*

GOVERNMENT OF BENGAL—MARINE DEPARTMENT.

NOTICE TO MARINERS—No. 186.

[Third Publication.]

KOREA, SOUTH COAST—SHADWELL GULF.

A rock in approach.

THE British Admiralty has given notice (No. 311 of 1902) of the existence of a rock, with a depth of 3 feet over it off the southern coast of Shadwell peninsula, situated with the western extreme of the south-western island of the Cho Do group (352 feet) bearing S 11° W., distant 6 cables, and the island summit (365 feet) S. 68° E. This rock is about 20 yards long, N. 11° W. and S. 11° E., and 5 yards broad.

Approximate position on Chart No. 2972, lat. 34° 45′ N., long. 128° 23½′ E.

(*Variation 4° Westerly in 1902.*)

This Notice affects the following Admiralty Charts:—Korean archipelago, No. 164; Shadwell and Cargodo gulf, No. 2972: Also, China Sea Directory, vol. IV, 1894, page 116; and Supplement, 1898, page 6.

E. J. BEAUMONT, COMDR., R.I.M.,
Port Officer of Calcutta.

Published for general information.

C. B. BAYLEY,
CALCUTTA, *the 28th June 1902.* *Asst. Secy., Marine Department*

GOVERNMENT OF BENGAL—MARINE DEPARTMENT.

NOTICE TO MARINERS—No. 187.

[Third Publication.]

AFRICA, NORTH-EAST—Red sea, Arabian coast.

Yenbo approach—Schermo and Thetis reefs marked by approach.

The British Admiralty has given notice (No. 324 of 1902) that beacons have been erected on Schermo and Thetis reefs in the approach to Yenbo.

The beacon on Schermo reef consists of an iron column on a masonry base, the whole surmounted by a ball 30 feet above the sea.

Approximate position, lat. 24° 5′ N, long. 37° 51½′ E.

The beacon on Thetis reef is of similar structure, but the height of the ball is only 10 feet above the sea.

Approximate position, lat. 23° 39′ N., long. 38° 2′ E.

This Notice affects the following Admiralty Chart:—Red sea, No. 8b: Also, Red Sea, &c., Pilot, 1900, pages 260, 263.

E. J. Beaumont, Comdr., R.I.M.,
Port Officer of Calcutta.

Published for general information.

C. B. Bayley,
Asst. Secy., Marine Department.

Calcutta, *the 28th June 1902.*

GOVERNMENT OF BENGAL—MARINE DEPARTMENT.

NOTICE TO MARINERS—No. 188.

[Third Publication.]

EASTERN ARCHIPELAGO—Tenimber islands.

Selaru—Reef reported to the north-westward.

The British Admiralty has given notice (No. 328 of 1902) that the Master of the S.S. *Generaal Pel* reports the existence of a reef situated with the western point of Selaru island bearing S. 18° W. and the northern extreme of the same island S. 84° E.

Approximate position, lat. 8° 4′ S., long. 130° 51′ E.

(*Variation 2° Easterly in 1901.*)

This Notice affects the following Admiralty Chart:—Eastern Archipelago, No. 948b: Also, Eastern Archipelago, part I, 1890, page 457.

E. J. Beaumont, Comdr., R.I.M.,
Port Officer of Calcutta.

Published for general information.

C. B. Bayley,
Asst. Secy., Marine Department.

Calcutta, *the 28th June 1902.*

GOVERNMENT OF BENGAL—MARINE DEPARTMENT.

NOTICE TO MARINERS—No. 189.

[Third Publication.]

AUSTRALIA, WEST.

Position of floating derelict vessel.

The Acting Port Master, Brisbane, has given notice (No. 4 of 1902) that the Master of the steamer *St. Mary* reports that, on the eleventh of May last, he fell in with an abandoned barque named the *Geertruda Garanda*, dismasted, in the following approximate position, viz.—

Latitude	...	...	...	33° 20′ South.
Longitude	...	...	...	100° 46′ East

E. J. Beaumont, Comdr., R.I.M.,
Port Officer of Calcutta.

Published for general information.

C. B. Bayley,
Asst. Secy., Marine Department.

Calcutta, *the 28th June 1902.*

REGISTERED No., C 209.]

No. 29 of 1902.

SUPPLEMENT TO

The Calcutta Gazette.

WEDNESDAY, JULY 16, 1902.

OFFICIAL PAPERS.

[Non-Subscribers to the GAZETTE *may receive the* SUPPLEMENT *separately on payment of five rupees per annum if delivered in Calcutta, or seven rupees and eight annas if sent by post.]*

CONTENTS.

	Page
WEATHER and Crop Report for the week ending the 14th July 1902	1011
Meteorological Report of the Province of Bengal for the month of June 1902	1016
Table of Rainfall recorded at stations in Bengal in June 1902	1018
Irrigation Operations for the year 1901-1902	1030
IRRIGATION Operations of fasl rabi, 1901-1902 .	1031
Circular and Eastern Canal for the week ending Saturday the 12th July 1902	1032
Results of the Meteorological Observations taken at the Alipore Observatory from 6th to 12th July 1902 ...	1033
Weekly Return of Traffic Receipts on Indian Railways ...	1034

WEATHER AND CROP REPORT.

For the week ending the 14th July 1902.

Burdwan.—Rainfall at Sadar 1·72, Kalna 3·09, Katwa 0·30, Raniganj 1·07. Weather hot and sultry. Ploughing and sowing continue. Transplantation commenced in some places. Fodder and water sufficient. Condition of cattle good. Common rice sells at 12 seers per rupee.

Birbhum.—Rainfall at Sadar 1·25, Rampur Hât 0·63. Weather hot and cloudy. More rain wanted. Transplantation going on. Sugarcane promising. Fodder and water sufficient. Common rice sells at 12 seers per rupee.

Bankura.—Rainfall at Sadar 1·17. Weather hot and cloudy with occasional rain. More rain wanted. Sugarcane doing well. Transplantation of paddy going on. Fodder and water sufficient. Rice sells at 12½ seers per rupee.

Midnapore.—Rainfall at Sadar 1·47, Contai 1·57, Tamluk 1·49, Ghatal 1·58. Weather hot. More rain wanted for paddy. Transplantation going on. Fodder and water sufficient. Cattle disease reported from thana Binpur. Common rice sells as follows:—

	Srs. ch.	
Sadar	12 8	per rupee.
Contai	12 6	
Tamluk	11 12	
Ghatal	12 0	

Hooghly.—Rainfall at Sadar 2·76, Serampore 1·76, Arambagh 1·53. Weeding of *aus*, sugarcane and jute progressing. Common rice sells as follows:—

	Srs. ch.	
Sadar	10 0	per rupee.
Serampore	10 10	
Arambagh	12 1½	

Howrah.—Rainfall at Sadar 1·71, Ulubaria 3·05. Fall general, but the amount of rainfall at Ulubaria was nearly double of that in Sadar. It has done good generally to all the crops; and no more rain is wanted at present at Ulubaria, but in the Sadar showers are wanted at intervals. Weather seasonable. Fodder and water sufficient. No cattle-disease. Common rice sells at Sadar at 10½ seers and at Ulubaria at 11 seers per rupee.

24-Parganas.—Rainfall at Sadar 1·53, Barasat 1·43, Basirhat 2·91, Diamond Harbour 4·46. Weather—Intermittent storm and sunshine. State and prospect of standing crops good, but more rain is wanted in Barasat and Basirhat. Transplantation of *aman* going on. Common rice sells at 12 seers. Condition of cattle good. Supply of fodder and water sufficient.

Nadia.—Rainfall at Sadar 1·80, Ranaghat 1·08, Chuadanga 1·85, Meherpur 1·00, Kushtia 0·83. Weather hot and cloudy. Fodder and drinking water sufficient. Common rice sells as follows:—

	Srs. ch.	
Sadar	11 0	per rupee.
Ranaghat	11 0	
Chuadanga	11 0	
Meherpur	10 11	
Kushtia	11 4	

Murshidabad.—Rainfall at Sadar 1·70, Kandi 1·28, Jangipur 4·33, Lalbagh 2·18. Weather seasonable. *Bhadoi* being harvested in Jangipur subdivision. Rain wanted for transplantation of *aman* seedlings in Kandi subdivision. The prospect of jute is good. No cattle-disease. Fodder and water sufficient. Common rice sells as follows:—

	Srs. ch.	
Sadar	10 12	per rupee.
Kandi	12 0	
Jangipur	11 8	
Lalbagh	11 4	

Jessore.—Rainfall at Sadar 1·75, Jhenida 1·54, Magura 1·42, Bangaon 1·30. No report received from Narail. More rain wanted, otherwise weather seasonable. Prospects of crops good. Fodder and water sufficient. No cattle-disease. Common rice sells at 12 seers per rupee.

Khulna.—Rainfall at Sadar 1·62, Bagerhat 2·92, Satkhira 2·08. Weather seasonable. Cultivation and sowing of *aman* going on. State of crops continues favourable. Fodder and water sufficient. Common rice sells as follows:—

	Srs. ch.	
Sadar	12 0	per rupee
Bagerhat	12 0	
Satkhira	10 8	

Rajshahi.—Rainfall at Sadar 1·92, Nator 1·45, Naugaon 1·64. Transplantation of winter paddy in progress. Cutting of jute begun. Sporadic cases of cattle-disease reported from Nator. Common rice sells at 12 seers per rupee.

Dinajpur.—Rainfall at Sadar 6·47. Fall in the district general, varying from 1·09 to 18·11. Weather seasonable. Standing crops good. Transplanting of winter rice progressing. No cattle-disease. Fodder and drinking-water plentiful. Rice selling at 12 seers per rupee.

Jalpaiguri.—Rainfall at Sadar 9·33, Alipore Duars 20·36. Weather seasonable. Transplantation of *haimanti* paddy going on. Prospect of *haimanti* and *bhadoi* paddy satisfactory. Common rice sells at 10¾ seers a rupee. Fodder and water sufficient.

Darjeeling.—Rainfall at Sadar 4·35, Kurseong 11·74, Siliguri 18·23, Kalimpong 4·48. *Hill*—Potato being plucked. *Haimanti dhan* being cultivated. Maize, *chota marua* and *bhadoi dhan* doing well. *Haimanti* paddy being transplanted. Prospects good. Coarse rice sells as follows:—

	Srs. ch.	
Hill	8 0	per rupee.
Terai	11 0	

Maize sells at Darjeeling at 16 seers and at Kalimpong at 18 seers per rupee.

Rangpur.—Rainfall at Sadar 6·71. Fall general. Weather cloudy and rainy. Cutting of *aus* and jute and transplantation of *aman* going on. Prospects not favourable at Nilphamari and Gaibanda. Common rice sells at 11 seers per rupee.

Bogra.—Rainfall at Sadar 2·66. Fall general. Weather hot and cloudy. Cutting of *aus* and jute and transplantation of *aman* commenced. Prospects good. Fodder and water sufficient. Common rice sells at 11¼ seers per rupee.

Pabna.—Rainfall at Sadar 0·09, Sirajganj 3·10. Fall general. Weather hot and partially cloudy. Weeding of paddy and jute continues. Prospects of standing crops fair. Fodder and water sufficient. No cattle-disease. *Aus* harvesting commenced. Common rice sells at 10 seers per rupee.

Dacca.—Rainfall at Sadar 2·02, Manikganj 1·02, Munshiganj 3·58, Narayanganj 5·42. Prospects of crops fair. Weather seasonable. Fodder available. No cattle-disease. Common rice sells at 11 seers per rupee.

Mymensingh.—Rainfall at Sadar 6·30, Jamalpur 7·07, Kishorganj 4·66, Nitrekona 18·01, Tangail 4·49. Weather rainy and hot. *Bhadoi* and jute crops have suffered owing to excessive rain. Transplantation of winter rice continues. Water sufficient. No cattle-disease. Common rice sells as follows:—

	Srs.	ch.	
Sadar	10	0	per rupee.
Kishorganj	11	0	
Jamalpur	11	0	
Netrokona	11	12	
Tangail	10	0	

Faridpur.—Rainfall at Sadar 1·25, Goalundo 0·57, Madaripur 2·34. Weather seasonable. Prospects of crops improving. Fodder sufficient. No cattle-disease. Common rice sells at 11 seers a rupee.

Backergunge.—Rainfall at Sadar 2·23. Fall general. Weather seasonable. Transplantation of *aman* continues. Cattle-disease reported from thana Matbari. Fodder sufficient. Common rice sell at 10 seers per rupee.

Tippera.—Rainfall at Sadar 2·62, Brahmanbaria 1·71, Chandpur 2·63. Weather seasonable. Prospects of standing crops good at Brahmanbaria, but not so at Sadar. Transplantation of *aman* still continues. Fodder and water sufficient. Average price of common rice is 11 seers 6 chitaks per rupee.

Noakhali.—Rainfall at Sadar 3·71, Feni 5·89. Fall general. Weather seasonable. Prospects of *aus* fair. Transplantation of *aman* commenced. Fodder and water sufficient. Cattle-disease at Companygunge. Common rice sells at Sadar at 10 seers and at Feni at 12 seers per rupee.

Chittagong.—Rainfall at Sadar 0·92, Cox's Bazar 1·23. Ploughing for *aman* crops going on. Cattle-disease prevalent in parts of the district. Water and fodder sufficient. Common rice sells at 12 seers per rupee.

Chittagong Hill Tracts.—Rainfall at Sadar 3·68. Fall general. Weather fine with occasional showers. *Joom* crops progressing. Ploughing and sowing continues. No cattle-disease. Common rice selling at 12 seers per rupee.

Patna.—Rainfall at Patna 2·46, Barh 1·12, Bihar 2·81, Dinapore 3·12, Hilsa 1·92, Bikram 2·37. Weather hot and cloudy. Rain has done some good. *Marua* being transplanted. *Dhan* being sown. Sowing of Indian-corn going on. Sugarcane doing well. No cattle-disease. Common rice sells as follows:—

	Srs.	ch.	
Patna	10	8	per rupee.
Barh	11	8	
Bihar	10	0	
Dinapore	11	4	

Gaya.—Rainfall at Sadar 3·22, Jahanabad 4·29, Aurangabad 3·58, Nawadah 3·33. Sowing of maize almost over, but transplantation of *marua* only about half done. Sugarcane doing well. More rain wanted. No cattle-disease. Fodder and water for cattle sufficient. Average price of common rice is 10½ seers per rupee.

Shahabad.—Rainfall at Sadar 1·77, Buxar 3·34, Bhabhua 5·16, Sasaram 3·55, Dehri 2·20. Weather hot with passing clouds. Rain has benefitted the sowing of *bhadoi* and paddy. Sugarcane good. Fodder and water sufficient. No cattle-disease. Common rice sells at Sadar at 11 seers a rupee.

Saran.—Rainfall at Sadar 0·40, Siwan 2·73, Gopalganj 2·13. Weather cloudy and very hot. Standing crops doing fairly well. More rain wanted. Fodder and water sufficient. No cattle-disease. Common rice sells at 11 seers per rupee.

Champaran.—Rainfall at Sadar 8·26, Bettiah 7·73. Weather hot and cloudy. Sowing of maize estimated at 95 per cent., coming up well. Transplantation of rice progressing. Heavy fall has much improved agricultural prospects. No cattle-disease. Fodder and water sufficient. Common rice sells at 12½ seers and maize 23½ seers per rupee.

Muzaffarpur.—Rainfall at Sadar 3·34, Hajipur 1·58, Sitamarhi 1·21. Weather hot and cloudy occasionally. Sowing of paddy and *bhadoi* crops still going on. Prospects of crops improved by recent rain. More rain wanted. Fodder and water sufficient. Cattle-disease in Sitamarhi subdivision much abated. Prices are—Common rice 11½ seers and maize 19 seers a rupee.

Darbhanga.—Rainfall at Sadar 2·08, Samastipur 2·53, Madhubani 0·71. Weather very hot and cloudy. More rain urgently wanted for transplantation of paddy seedlings Fodder and water sufficient. Cattle-disease is reported from Darbhanga and Warisnagar thanas. Common rice sells as follows:—

	Srs.	ch.	
Sadar	11	4	per rupee.
Samastipur	12	0	
Madhubani	11	6	

Monghyr.—Rainfall at Sadar 0·71, Begusarai 2·07, Jamui 0·74. Weather seasonable. *Bhadoi* and paddy sowings going on. The rainfall of the week has been beneficial to the crops, but more rain still wanted. Transplantation of *marua* and paddy commenced in places. Standing crops promising. Fodder and water sufficient. A few cases of cattle-disease reported from Begusarai thana. Common rice sells at Sadar at 10 seers 11 chitaks and at subdivisions at 11 seers per rupee.

Bhagalpur.—Rainfall at Sadar 2·76, Banka 2·10, Madhipura 2·19, Supaul 1·63. Weather cloudy. Transplantation of *bhadoi* and *aghani* paddy going on. Sugarcane and *janera* doing well. Recent rainfall has done immense good. More rain wanted. *Marua* in Supaul has been damaged by drought. Cattle-disease reported from everywhere. Fodder and water sufficient. Common rice sells as follows:—

	Srs.	ch.	
Sadar	12	6	per rupee.
Banka	12	0	
Madhipura	13	0	
Supaul	13	0	

Purnea.—Rainfall at Sadar 0·84, Kishanganj 6·86, Araria 5·06. Fall general, but very scanty at Sadar, where want of rain is keenly felt by the agriculturists. Prospects on the whole good. Weather variable. A few cases of cattle-disease reported from Koari and Palasi outposts. Fodder and water sufficient. Common rice sells at Sadar at 10 seers and at Kishanganj and Araria at 11 seers per rupee.

Malda.—Rainfall at Sadar 2·00, Sibganj 3·10, Gajol 4·04. Weather very hot and cloudy. Transplantation of winter rice going on. No cattle-disease. Fodder and water available. Common rice sells at 11 seers per rupee.

Sonthal Parganas.—Rainfall at Sadar 1·51, Deoghur 1·20, Godda 1·87, Jamtara 2·18, Pakaur 6·49, Rajmahal 9·59. Weather unduly warm though with occasional showers. Indian-corn and sugarcane flourishing. More rain wanted for paddy transplantation. Fodder and water sufficient. Price of common rice at Sadar is 13 seers per rupee.

Cuttack.—Rainfall at Sadar 4·42. Fall general. Weather of settled monsoon character. *Beali* and *sarad* growing well and *beali* being weeded and harrowed in places. Prospects good. Fodder and water sufficient. Common rice sells at 13 seers 2 chitaks at Sadar.

Balasore.—Rainfall at Sadar 2·02. Fall general. Transplantation begun. Weeding of paddy going on, prospects of crop good. Sugar-cane and standing crops progressing. Jute and oilseeds doing well. Rice sells at 13 and 15 seers per rupee at Sadar and Bhadrak respectively. No cattle-disease. Fodder and water ample.

Angul.—Rainfall at Sadar 0·81, Chhindipada 2·09, Tikerpara 3·00, Bissipara 1·77. Monsoon set in. Sowing of *bhadoi* and *sarad* crop nearly over. Seeds germinating well. Fodder and water obtainable. No cattle-disease. Weather rainy with high wind. Common rice sells at 12 and 15 seers per rupee at Sadar and interior respectively.

Puri.—Rainfall at Sadar 2·28. Rainfall general and favourable to *bhadoi* crops. Weather cloudy. Winter rice growing well. Sugarcane, cotton and other miscellaneous crops doing well. Fodder and water-supply sufficient. Rice sells at 13 seers 12 chitaks per rupee.

Hazaribagh.—Rainfall at Sadar 1·75, Giridih 2·01. Weather hot and cloudy. Ploughing and sowing continues. Weeding of *makai* crop commenced. Fodder sufficient. Water scarce. Common rice sells at 11½ seers per rupee. More rain wanted.

Ranchi.—Rainfall 1·68. Weather hot and cloudy. Sowing of *bhadoi* and winter rice in progress. More rain wanted. Cattle-disease reported from three thanas. Fodder and water sufficient. Common rice sells at 13½ seers per rupee.

Palamau.—Rainfall at Sadar 1·70. Fall general. Weather cloudy. *Bhadoi* sowings in progress. Prospects fair. Sugarcane doing well. Cattle-disease decreasing. Fodder and water sufficient. Rice selling at Sadar at 10 seers 2 chitaks per rupee.

Manbhum.—Rainfall at Sadar 0·92, Gobindpur 2 23. Weather hot and cloudy. Prospects of standing crops good. Transplantation of winter rice retarded in most thanas for want of rain. Fodder and water sufficient. Cattle-disease reported from thana Purulia. Common rice selling at Sadar at 12 seers and at Gobindpur at 11 seers per rupee.

Singhbhum.—Rainfall at Sadar 2·49. Weather seasonable. Transplantation of paddy and rearing of *tasar* in progress. More rain needed. Average price of rice is 14 seers 10 chitaks in the district; at Chaibassa 12 seers per rupee.

General Summary.—Rain fell during the week throughout the Province. The fall was heaviest in North Bengal. Several parts of Bihar and Chota Nagpur and a few districts of the Burdwan and Presidency Divisions are in need of more rain. Agricultural operations being pushed on vigorously. Transplantion of winter rice continues. Autumn crops and sugarcane are generally promising. Cutting of early rice and jute has commenced at places. Cattle-disease reported from 13 districts. Fodder sufficient. No want of water except in Hazaribagh. The price of common rice has risen in 8 districts, fallen in 9, and is stationary in the rest.

By order of the Lieutenant-Governor of Bengal,

W. C. MACPHERSON,
Offg. Secretary to the Govt. of Bengal.

REVENUE DEPARTMENT,
The 15th July 1902.

Meteorological Report of the Province of

STATION OBSERVATIONS.

Meteorological Division.	Division.	District.	Representative stations.	Air Pressure.					Wind.		Temperature.					
				Highest, 8 A.M., barometer reading.	Lowest, 8 A.M., barometer reading.	Mean, 8 A.M., reduced to 32°.	Mean reduced to sea-level and constant gravity, Lat. 45°.	Variation from normal mean.	Mean direction at 8 A.M.	Mean velocity in miles daily.	Highest of month.	Lowest of month.	Mean daily maximum temperature.	Mean daily minimum temperature.	Mean daily temperature.	Variation from normal mean.
South-West Bengal.	Burdwan	Burdwan	Burdwan	29·665	29·389	29·517	29·503	+·009	S18°W	85	100·4	70·3	94·6	78·8	86·7	+0·2
			Raniganj	29·432	29·139	29·280	29·559	—	S72°E	41	104·2	69·9	96·9	78·7	87·8	+0·4
		Birbhum	.....													
		Bankura	Bankura	29·423	29·151	29·288	29·533	—	S31°E	108	100·1	69·4	97·8	79·5	88·7	+1·4
		Midnapore	Midnapore	29·593	29·318	29·465	29·559	+·007	S11°E	101	101·3	73·2	95·5	78·9	87·2	+0·2
		Hooghly	.....													
		Howrah	.....													
	Presidency	24 Parganas	Sangor Island	29·748	29·455	29·594	29·563	+·011	S9°W	426	93·9	74·1	91·6	82·0	86·8	+0·8
		Calcutta	Calcutta	29·757	29·446	29·603	29·570	+·017	S1°E	140	97·7	70·6	92·6	78·7	85·6	+0·9
		Nadia	Krishnagar	29·744	29·439	29·582	29·577	—	S28°E	130	99·2	70·2	93·0	77·5	85·3	−0·6
		Murshidabad	Berhampore	29·711	29·398	29·553	29·568	+·008	S31°E	105	100·3	72·3	93·2	78·2	85·7	+0·3
		Jessore	Jessore	29·749	29·435	29·594	29·573	+·005	S35°E	88	95·5	71·2	91·4	78·9	85·2	0
		Khulna	.....													
North Bengal.	Rajshahi	Rajshahi	Rampur Boalia	29·718	29·401	29·557	29·577	+·023	S29°W	69	98·1	70·6	90·5	77·6	84·1	−0·3
		Dinajpur	Dinajpur	29·667	29·328	29·480	29·557	−·022	S74°E	89	97·3	73·5	89·6	76·9	83·3	−0·3
		Jalpaiguri	Jalpaiguri	29·563	29·195	29·369	29·602	−·009	N77°E	52	93·4	72·1	87·6	75·5	81·6	0
		Darjeeling	Darjeeling	23·035	22·790	22·903	—	−·022	S37°W	131	66·7	51·6	65·0	56·0	60·5	−0·2
		Cooch Behar	Cooch Behar	29·680	29·325	29·491	29·603	—	S80°E	38	93·4	71·1	87·5	73·0	81·8	—
		Rangpur	Rangpur	29·706	29·360	29·523	29·601	+·003	S72°E	74	94·2	?	88·7	?	?	?
		Bogra	Bogra	29·730	29·388	29·558	29·571	−·003	S51°E	134	95·2	72·2	89·6	77·0	83·3	−0·2
		Pabna	Sirajganj	29·759	29·405	29·584	29·583	+·002	S38°E	64	93·[illegible]	69·7	85·1	76·6	82·4	−0·6
East Bengal.	Dacca	Dacca	Narayanganj	29·783	29·413	29·625	29·599	+·011	S42°E	164	92·6	71·7	89·1	78·3	83·7	+0·1
		Mymensingh	Mymensingh	29·746	29·391	29·585	29·598	−·017	S61°E	74	92·7	72·6	87·1	76·6	81·9	−0·2
		Faridpur	Faridpur	29·759	29·428	29·605	29·599	+·003	S15°E	110	93·5	73·9	89·5	77·1	83·3	+0·1
		Backergunge	Barisal	29·763	29·434	29·625	29·883	−·009	S45°E	103	93·8	71·1	89·5	77·6	83·1	−0·4
	Chittagong	Tippera	Comilla	29·764	29·340	29·627	29·611	—	S37°E	122	94·3	71·8	88·8	76·7	82·8	+0·4
		Noakhali	Noakhali	29·761	29·416	29·622	29·611	—	S34°E	102	90·7	70·4	87·1	77·4	82·3	+0·8
		Chittagong	Chittagong	29·749	29·426	29·597	29·632	0	S42°E	171	90·5	70·1	87·0	76·0	81·5	−0·1
		Chittagong Hill Tracts	.....													
Bihar.	Patna	Patna	Bankipore	29·624	29·293	29·460	29·533	−·003	N74°E	215	110·0	70·2	99·4	80·6	90·0	+1·8
		Gaya	Gaya	29·308	29·063	29·204	29·527	+·002	N46°W	101	108·8	70·8	102·4	82·5	92·5	+2·6
		Shahabad	Dehri	29·326	29·092	29·227	29·525	+·011	N81°W	170	111·4	72·5	103·5	83·2	93·4	+3·0
			Buxar	29·444	29·183	29·330	29·526	+·011	E	308	109·0	69·6	101·3	82·4	91·8	+3·3
			Arrah	29·322	29·361	29·462	29·541	—	N39°W	107	109·0	69·1	100·0	81·4	91·2	+2·5
		Saran	Chapra	29·525	29·248	29·398	29·530	—	S81°E	105	109·5	69·6	100·2	80·3	90·3	+2·6
		Champaran	Motihari	29·526	29·218	29·363	29·541	—	N84°E	110	102·4	68·8	94·2	77·0	85·9	+0·5
		Muzaffarpur	Muzaffarpur	29·589	29·271	29·416	29·546	—	S85°E	134	105·7	69·2	95·2	78·3	86·8	—
		Darbhanga	Darbhanga	29·590	29·283	29·429	29·548	−·005	S89°E	92	101·3	71·6	93·2	79·3	86·2	+0·5
	Bhagalpur	Monghyr	.....													
		Bhagalpur	Bhagalpur	29·615	29·276	29·433	29·544	+·011	N84°E	10	104·3	69·1	95·5	79·4	87·4	+2·0
		Purnea	Purnea	29·681	29·347	29·497	29·566	−·002	N73°E	94	97·3	73·7	92·6	77·9	85·3	+0·6
		Malda	Malda	29·708	29·340	29·522	29·545	—	S42°E	20	100·1	70·5	94·2	77·8	86·0	−0·4
		Santhal Parganas	Naya Dumka	29·272	28·971	29·120	29·501	+·029	S56°E	113	105·5	69·4	95·5	78·8	87·2	+0·8
Orissa.	Orissa	Cuttack	Cuttack	29·698	29·430	29·550	29·572	+·018	S83°W	81	110·5	74·2	99·7	79·9	89·8	+2·0
			False Point	29·702	29·504	29·621	29·584	+·020	S55°W	283	96·5	72·1	90·2	80·1	85·2	−0·1
		Balasore	Balasore	29·716	29·455	29·573	29·565	+·010	S37°W	134	100·0	71·8	94·4	79·2	86·8	+1·6
		Puri	Puri	29·757	29·518	29·622	29·584	—	S47°W	355	98·7	74·6	89·7	80·3	85·0	—
			Gopalpur	29·739	29·513	29·631	29·581	+·014	S31°W	426	104·8	70·6	92·1	70·7	85·9	+1·0
Chota Nagpur.	Chota Nagpur.	Hazaribagh	Hazaribagh	27·721	27·513	27·622	29·538	+·015	S83°W	203	102·2	71·3	97·2	78·4	87·8	+3·7
		Ranchi	Ranchi	27·617	27·409	27·514	29·545	+·011	S67°W	205	103·2	72·4	97·5	77·7	87·6	+4·6
		Palamau	Daltonganj	28·907	28·751	28·863	29·633	—	S27°W	112	111·1	76·0	106·0	84·8	95·4	—
		Manbhum	Purulia	28·894	28·650	28·781	29·530	—	S76°W	47	107·2	71·4	100·2	79·0	89·6	—
		Singhbhum	Chaibasa	28·950	28·721	28·851	29·541	+·010	S69°W	48	106·2	70·0	99·7	79·6	89·7	+3·2
Assam.	.....	Lakhimpur	Dibrugarh	29·511	29·208	29·342	29·656	—	N36°E	48	94·1	69·0	85·1	72·6	78·9	—
		Sibsagar	Sibsagar	29·522	29·183	29·341	29·630	−·010	N37°E	46	93·2	73·0	86·3	75·7	81·0	−1·9
		Darrang	Tezpur	29·567	29·251	29·405	29·617	—	N79°E	118	91·6	73·9	86·4	76·0	81·2	—
		Goalpara	Dhubri	29·700	29·352	29·528	29·598	−·008	N69°E	182	90·7	70·2	84·8	75·1	80·0	−1·1
		Cachar	Silchar	29·751	29·424	29·585	29·644	−·002	N45°E	67	97·6	71·8	88·7	75·5	82·2	−0·7
		Khasi and Jaintia Hills	Shillong (b)	25·093	24·829	24·964	...	...	...	...	80·1	53·0	74·4	64·0	69·2	...
			Cherrapunji	25·680	25·347	25·538	...	...	...	...	77·3	61·0	72·0	63·9	68·0	...

Bengal for the month of June 1902.

Humidity.		Cloud.			District Observations.										
					Rainfall—										
					Of month.					Since 16th of May 1902					
Mean, 8 A.M.	Variation from normal mean.	Mean cloud amount, 8 A.M.	Variation from normal mean, 8 A.M.	Rainfall.	Mean of district.	Normal mean.	Variation from mean.	Number of rainy days.	Normal mean number of rainy days.	Mean of district.	Normal mean.	Variation.	Mean number of rainy days.	Normal mean number of rainy days.	District.
84	+4	0·4	—0·8	6·94	6·99	10·15	—3·16	8·30	11·90	8 78	13·13	—4·34	17·20	15 17	Burdwan.
81	—	4·7	—	7·01	4·50	11·30	—6·80	9 33	12 23	7·08	14·08	—7·00	12·83	15·57	Birbhum.
78	—	5·9	—	3·90	3·02	10·83	—7·81	6 40	11·66	5·83	13·58	—7·75	8·80	15 02	Bankura.
84	—	3·7*	—	5·15	3·99	10·25	—6 26	8 25	11·75	5·06	13·21	—7 25	11·13	15·27	Midnapore.
					7·49	10·36	—2·87	11·67	12 15	10·64	13·43	—2·79	15·34	15·97	Hooghly.
83	—4	8·2	+0·3	5·87	4·02	10·03	—6 01	10 33	13·17	9·07	13·80	—4 75	14·00	16·55	Howrah.
84	+1	8 3	+1·0	5·47	6·91	10·89	—3·98	10 43	12·50	10·30	13·60	—3 30	13·37	16·51	24-Parganas.
85	—	5·0	—	5·66	5·47	11·04	—5·57	13·00	12·58	10·60	13·99	—3·39	16·00	16 56	Calcutta.
86	+4	8·0	—0·3	5·63	7·03	9·90	—2·06	11·00	12·52	13·52	13·70	—0·18	17·00	17·16	Nadia.
88	+1	8·1	—0·8	7 04	6·04	10·14	—4 10	11·38	11 92	11·27	13·38	—2 11	17·76	16 11	Murshidabad.
					8 02	11·07	—3·07	12·40	13·72	14·90	15·46	—0·56	19·00	18·32	Jessore.
86	—	4 4	—	11·45	9·70	13·74	—3·04	11·80	14·38	14·29	16·24	—1·96	16·20	16 50	Khulna.
89	—	8·4	—	13·50	15·26	10·51	+4·75	13·67	11·99	18·19	14·26	+3·93	20·00	16·59	Rajshahi.
90	—	4·6	—	29·18	12·52	13·78	—1·26	11·60	12·89	15·61	17·65	—2·04	16·40	16·77	Dinajpur.
93	0	(a) 8 6	—0·1	23·10	29·03	26·06	+2·27	19·17	18·47	34·10	35·64	—1·54	23·37	25 61	Jalpaiguri.
92	—	8·6	—	27·64	21·76	22·59	—0·83	20 50	19 93	25·59	28·29	—2·70	27·33	27·48	Darjeeling.
91	—	5·7	—	11·57	26·11	27·44	—1·33	16 60	17·91	33·48	36·62	—3·14	24·30	25 91	Cooch Behar
89	—	7·8	—	14·37	15·70	17·06	—1·36	15·25	14·11	23·44	23·61	—0·17	24·00	29·42	Rangpur.
94	—	8·7	—	21·54	16 55	12 83	+3·72	13 00	13·30	21·83	17·65	+4·03	20 00	18·71	Bogra.
91	+2	9·2	+1·1	18·22	20·04	11·49	+8 55	13·00	13·63	25·74	16·93	+9·81	21·00	18·09	Pabna.
93	—	7·9	—	29·46	19·66	12 64	+7·02	14·60	15·09	28·00	18·17	+9·83	25·40	20·56	Dacca.
90	—	6·4	—	21·01	19·83	17·00	+1·99	16·75	15·37	20·68	24 80	+4 88	25·50	21 79	Mymensingh.
90	—	8·3	—	27·05	16·58	12·37	+4·21	10·67	14 59	24·78	16 94	+7·84	25·67	19·57	Faridpur.
89	—	7·0	—	19·94	23·41	17·37	+6·04	16·00	16·75	34 00	22·28	+11·72	22·37	21·63	Backergunge.
87	—	5·8	—	23·09	20·57	14·58	+5·99	14·88	14·88	27·45	20·29	+7·16	24·02	30 27	Tippera.
87	—1	7·7	—0·3	27·85	27·24	22·20	+5·04	18·50	17 41	32·74	28 30	+4·44	30·00	22 95	Noakhali.
					27·75	23 56	+4·19	21·29	17·76	33 71	30 71	+3·00	27·72	23 57	Chittagong.
73	0	4·2	—2·0	2·05	28·35	19·89	+8·46	22·50	19 37	31·28	26·99	+4·29	29·00	25·20	Chittagong Hill Tracts.
77	+10	3·5	—2·9	1·02	2·89	7 71	—4·82	4·17	7·80	3·68	5·88	—3·20	5·34	9·32	Patna.
55	—	4·8	—	5·95	2·45	6 52	—4·07	4·00	7·46	3·00	7 36	—4 36	5·00	8·61	Gaya
59	—	3·6	—	0·84											
67	—	0	—	1·83	2·58	6·41	—3·83	3·08	7·62	2·78	6·76	—4·03	3 54	8 63	Shahabad.
77	—	4·0	—	3·07											
82	—	4 0	—	5·07	2·36	7·01	—5·35	3 17	7 49	2·01	8·71	—5·80	5 00	8 94	Saran.
82	—	3 1	—	1·83	5·24	9·34	—4·10	7·25	9·46	6·35	10·91	—4·56	9 25	11·89	Champaran.
83	0	5·9	+0·5	5·63	4 89	7·41	—2·52	5·37	7·83	5·57	8·85	—3 28	7·14	9·85	Muzaffarpur.
					5·46	7·47	—2·01	5 80	8·14	6 42	8·89	—2 47	7·40	10 03	Darbhanga.
76	—	5 5	—	4·88	4·85	7·62	—2 77	5·60	5·55	5·57	8 55	—3·28	7·10	10 04	Monghyr.
86	0	3 7	—2·9	8·96	5·11	8·34	—3·23	6·86	9·36	6·23	10·40	—4·17	5·60	11·04	Bhagalpur.
86	—	4·8	—	8·65	5·90	12·00	—2·70	7·43	12 00	11·90	14·07	—2 17	10 57	13·79	Purnea.
78	—	6·3	—	4·25	9·53	10·11	—0·58	9·75	11·73	11·46	13·09	—1 63	13·40	15 20	Malda.
80	+6	6·2	—0·2	7·77	6·30	9·79	—3·49	7·94	11·28	8·44	11·35	—2·91	10·75	14·11	Santhal Parganas.
83	—2	7·8	+0·6	2·95	5 90	9·71	—4·81	7·50	10 30	6·06	12·67	—6·61	9 89	13·10	Cuttack
76	—	5·0	—	3·21											
85	—	5·4	—	4·06	5·62	9·37	—3·75	9·43	10·88	7·47	12 49	—5·02	12 57	14·43	Balasore.
79	—	4 6	—	1·70	5·18	8·63	—3·45	7·00	9·40	6·21	10 41	—4·17	9 29	11 73	Puri.
53	—13	7·0	0	2·38											
62	—	5 2	—	2·45	3·15	8·43	—5·28	5·67	9·85	3 91	9 70	—5·79	7·17	11 83	Hazaribagh.
57	—	1·8	—	0·49	2·44	9·64	—7·20	6·33	11·78	2·83	10 65	—7·82	7·83	13 03	Ranchi.
68	—	5 0	—	4 34	0·48	6·80	—6·32	1·50	7·92	0·79	7·86	—0·77	3·00	9·27	Palamau.
75	—	4 2	—	3·80	4·10	9·59	—5·49	6·86	11·01	5 01	11·39	—0·38	9·29	13 66	Manbhum.
92	—	5·8	—	16·06	4·47	10·57	—6·10	5·67	11·93	5·60	12·37	—7·07	10 80	15·40	Singhbhum.
94	+5	9·5	+0·8	8·18											Lakhimpur.
90	—	7·4	—	14·41											Sibsagar.
90	0	8·7	+1·3	25·64											Darrang
90	+9	9·3	+1·0	27·69											Goalpara.
86	—4	8·8	—	13·50											Cachar.
94	+5	8 7	—	132·29											Khasi and Jaintia Hills.

(a) Mean of 19 days.

Table of Rainfall recorded at stations

Meteorological Division.	Division.	District.	Station.	1	2	3	4	5	6	7	8	9	10	11	12	13	14	15	16	17	18	19	20
South-West Bengal.	Burdwan.	Burdwan	Kalna	0·03	...	0·04	1·28	...	0·22	...	...	...	...	...	2·67	2·79	0·42	...	1 03	...	0·09	0 07	...
			Burdwan	...	0·68	0·01	1·48	0·93	...	0·07	...	...	1·43	...	...	0·01	...	1·32	...	0·01	0·63	...	0·02
			Katwa	1·08	0·21	...	0·38	0·18	...	...	...	...	0·03	0·53	1·30	0·02	0·22	0·70	...	...	...	...	0·40
			Raniganj	...	0·03	...	1·32	...	0·08	0·83	...	..	0·22	...	3·20	...	0·52	...	0·11	...	...	...	...
			Mankur	...	0·50	...	0·71	...	...	...	...	...	0·15	...	...	...	...	...	...	...	...	...	...
		Birbhum	Suri	0·67		0·26	0·90	...	...	...	0 60	0·16	0·03	0·18	...	...	0·01	...	...	...	...	...	0·05
			Hetampur	...	0·29	...	1·72	0·02	...	...	...	...	0 62	0·08	0·35	0·47	...	...	...	...	...	...	...
			Rampur HAt	1·10	0·18	...	1·07	...	...	0·04	...	...	0·01	0·38	0·20	0·25	...	0·45	...	...	...	...	...
			Bolpur	..	0·45	...	1·15	...	...	...	...	...	0·44	0·20	...	0·15	0·09	0·15	...	...	...	...	...
			Murari	0·58	0·25	...	0·12	...	...	0·11	...	...	0·38	...	0·23	0·92	...	0·09	0·12	0·28	...	...	0·44
			Labpur	0·77	0·12	...	0·32	0 15	...	...	...	...	...	...	...	0·57	...	0·65	...	...	...	...	...
		Bankura	Bankura	...	0·45	..	0·04	...	0·16	...	...	...	0·05	...	2·10	...	...	...	0 21	...	...	...	...
			Vishnupur	...	0·58	0 02	1·65	...	0·05	...	...	...	0·75	...	0·10	...	...	...	0·37	...	...	...	...
			Maliara	..	0·86	...	0·35	...	0·54	0·15	...	...	0·07	...	0· 0	...	...	...	0·28	...	...	...	...
			Khatra	...	0·69	0·15	0·04	0·05	...	...	...	0·41	0·47	...	...	...	...	...	...	...	...	...	0·07
			Indas	...	0·49	0·17	1·09	0·35	...	0·14	...	...	0·13	...	...	...	0·05	...	...	...	0·06	...	...
			Kotalpur	...	0·62	0·63	1·50	...	...	...	...	...	1·09	...	...	1·00	...	...	...	...	...	...	...
			Onda	...	0·24	...	1·98	0·13	...	...	...	...	...	...	0·65	...	...	...	...	...	...	...	...
			Gangajalghati	...	0·56	...	0·69	...	0·83	...	...	...	0·22	...	1 15	...	...	...	...	...	...	...	...
			Raipur	...	1·40	...	...	...	0·69	...	...	...	...	...	...	...	...	...	...	...	...	...	0·25
			Sonamukhi	...	0·73	...	0·37	...	...	0·06	...	...	0·72	...	0·14	...	...	...	0·06	...	...	...	...
		Midnapore	Contai	...	0·61	0·62	0·02	.	0·01	...	..	...	0·08	...	...	0·14	0·16	...	0·75	0·47	0·20	...	...
			Tamluk	...	0·44	...	...	0·50	0·98	..	...	...	...	0·40	...	...	...	...	...	0·05	...	...	0·56
			Midnapore	...	...	1·13	0·29	...	0·40	...	...	...	...	0·13	...	...	...	...	...	0·44	...	...	0·85
			Ghatal	...	0·31	...	0·08	0·40	1·11	...	...	...	0·37	...	0·15	...	...	...	0·34	...	...	...	...
			Kukrahaty	...	0·20	0·08	0·19	1·11	0·23	...	...	...	...	0·26	...	0·19	...	...	0·11	...	...	...	...
			Garhbeta	...	1·00	0·70	1·34	0·60	0·26	...	...	0·10	...	0·15	...	...	...	...	0·22	...	0·02	...	...
			Panskura	...	...	...	0·19	0·45	0·35	...	...	...	...	0·09	...	...	...	...	0·05	...	...	...	0·07
			Dantan	...	0·40	0·49	...	...	0·42	0·09	...	...	...	...	...	...	...	0·73	...	1·21	...	0·14	...
		Hooghly	Serampore	...	0·08	...	0·42	0·72	0·62	0·49	...	..	1·34	...	0·07	1·17	...	0·42	...	...	0·43	...	...
			Hooghly	...	0·31	...	0·39	0·85	...	0·34	0·05	1·21	.	1·19	1·70	0·65	...	1·33	...	0·02	0·37	...	...
			Arambagh (Jahanabad).	...	0·29	...	0·77	0·73	...	0·55	...	...	0·53	...	0·42	0·24	0·16	...	0·09	...	0·01	...	...
		Howrah	Howrah	...	0·09	...	0·30	0·56	0·21	...	...	...	0·60	0·25	0·45	0·19	...	...	...	...	0·31	...	...
			Mohesreka	...	0·05	0·02	0·09	1·15	0 02	...	...	...	...	1·25	...	1·44	...	...	0·05	0·09	0·15	...	0·24
			Uluberia	...	0·76	0·02	0·33	0·38	0·12	...	..	...	...	0·82	...	0·15	...	...	0·22	..	0·12	0·40	0·02
			Amta	...	0·30	...	0·21	0·69	0·02	...	...	..	...	1·13	...	...	...	...	..	...	0·08	0·08	...
	Presidency.	24-Parganas	Saugor Island	.	1·77	0·30	0·62	..	0·06	...	...	...	...	0·13	...	...	...	...	1·51	0·94	0 23	...	0·03
			Diamond Harbour.	...	0·97	...	0·24	1·30	...	...	...	...	...	...	0·06	...	...	...	0·70	...	0·85	...	0·15
			Budge-Budge	...	0·42	...	0·21	1·09	0·17	...	...	0·17	0·05	2·00	..	0·06	...	...	0·38	0·02	0·20	0·18	...
			Canning Town	...	0·13	0·21	0·63	0·11	...	0·13	0·25	0·11	...	...	1·52	0·64	...	0·17	.	...	0·25	...	0·19
			Alipore (Obsy.)	0·01	0·18	0·01	0·23	1·04	0·38	0·32	0·10	...	...	0·48	...	0·32	...	...	0·13	0·07	0·24	...	...
			Barrackpore	...	0·21	...	0·69	0·35	0·84	0·30	...	...	0·73	...	...	1·01	0·06	0·75	...	0·06	0·20	...	...
			Dum-Dum	...	0·09	...	0·51	1·02	0·43	...	...	0·70	...	...	0·13	2·61	...	...	...	0·15	0·04	...
			Barasat	...	0·15	...	0·38	0·78	0·52	0·21	...	2·58	...	...	0·56	0·52	...	0·13	...	0·07	0·33	...	...
			Basirhat	..	0·90	...	0·94	0·80	0·11	0·05	...	...	...	...	0·20	0·61	0·02	0·91	...	...	0·38	...	0·10
		Nadia	Ranaghat	0·18	0·42	...	1·10	0·12	...	0·10	0·04	...	...	...	...	1·10	...	0·86	...	...	1·10	...	0·04
			Krishnagar	0·58	0·30	...	0·44	0·38	0·53	...	...	0·04	...	...	0·24	1·11	0·04	0·02	...	0·03	0·04	...	...
			Chuadanga	0·02	0 36	...	0·31	0·26	...	...	...	...	...	0·04	0·21	0·74	0·03	0·45	0·57	...	...	...	...
			Meherpur	1·12	1·38	...	0·46	1·16	...	...	...	...	...	1·14	...	...	0·62	0·24	0·92	...	...	...	...
			Kushtia	2·33	1·67	...	...	...	...	0·28	...	0·02	...	0·59	...	0·42	0·72	0·94	1·65	0·85	...	...	...
		Murshidabad	Kandi	1·13	0·39	...	0·85	0·08	...	0·05	...	...	...	0·88	1·65	...	0·25	0·07	...	0·02	...	...	...
			Berhampore	0·76	1·43	...	0·63	...	...	...	0·17	.	0·05	0·05	0·07	0·41	0·06	0·03	0·10	0·04	...	...	...
			Lalbagh	0·65	1·58	...	...	..	....	...	...	0·48	...	0·36	0·54	..	0·08	0·03	0·33	0·26	...	...	...
			Azimganj	0·69	0·31	...	0·03	...	...	0·13	0·08	0 20	0·19	0·12	0·80	0·20	0·62	0·22	0·18	0·16	...	...	...
			Jangipur	0·47	0·11	...	...	..	...	...	..	1·27	...	0·46	0·03	1·69	0·05	...	0·02	0·39	0·30	...	...
			Lalgola	0·49	...	0·05	0·04	...	...	...	...	0·34	0·05	0·29	0·45	0·20	0·12	...	0·80	0·41	...	0·37	0·30
			Akriganj	0·23	0·12	...	..	..	..	...	...	...	1·74	0·15	0·63	1·58	1·06	...	1·61	0·19	...	...	...
			Pathakhari	...						...													
			Dumkal	0·75	0·00	...	0·04	...	...	0·20	...	...	0·35	0·10	...	1·01	0·10	0·43	0·34	...	...	...	...
		Jessore	Narail	1·48	1·24	0·51	0·30	1·02	0·59	...	...	0·30	...	1·03	1·41	0·52	...	0·23	0·21	0·12	...	...	...
			Jessore	0·18	1·04	...	0·45	0·71	0·35	...	...	0·03	...	1·07	...	0·05	0·04	0·24	0·26	...	0·04	0·13	0·03
			Jhenida	0·36	0·41	...	...	1·55	...	...	...	...	0·85	0·15	0·80	...	0·20	0·40	0·52	...	...	...	...
			Magura	1·02	0·64	...	0·03	2·81	0·02	...	..	...	...	0·25	0·14	..	0·80	0·77	0·06	...	0·08	...	...
			Saugaon	0·77	0·95	...	0·59	...	0·09	0·24	...	...	...	0·12	...	0·29	0·42	0·46	...	0·16	1·80	...	...
		Khulna	Satkhira	...	0·83	0·15	0·48	...	0·30	...	...	...	...	...	...	1·16	...	1·90	0·72	0·35	...	...	...
			Bagerhat	0·20	0·90	0·63	...	0·37	0·33	...	...	...	...	...	0·52	0·44	1·40	0·67	0·10	...	2 15	0·02	0·09
			Khulna	1·08	0·75	...	...	0·80	0·90	...	...	0 26	0·25	0·50	0·48	0·44	0·12	0·05	...	...	0·60	0·20	0·10
			Kaliganj	0·10	...	1·30	0·40	0·52	...	...	...	...	...	...	...	...	...	...	0·88	0·55	...	2·13	...	...
			Nakipur	...	...	...	0 61	0·41	0·64	...	...	1·42	...	...	...	...	...	0·38	0·43	...	...	...	...
			Dumuria	0·28	2·35	...	0·47	...	0·50	...	...	...	...	...	...	...	...	0·50	0·81	...	...	1·03	...
			Rampal	0·93	0·32	0·43	0 72	0·25	..	...	...	1·48	...	...	...	0·76	0·97	..	...	1·30	...	...	0·11
			Kalaroa	0·22	0·70	...	...	...	0·46	...	.	0·01	...	1·47	...	0·01	0·25	0·72	1·63	0·07	0·12	...	...
			Paikgacha	...	0·85	...	3·18	...	0·41	...	...	..	...	0·41	...	..	0·59	2·31	0·40	...	1·26	...	0·05
			Mollahat	0·25	0·65	0 02	...	0·61	1·25	...	0·61	0·02	0·62	0·02	0·25	...	1·02	...	0·02	0·12	...	0·02	0·11
			Moreiganj	0·20	1·42	0·80	0·83	1 70	1 70	...	...	...	...	0·10	0·67	0·62	1·70	2·10	0·25	...	2·50	...	...
			Tala	...	0·77	0·28	0·30	0·47	0·50	...	...	...	...	...	...	...	0·10	1·80	0·50	0·10	0·51	...	0·06
North Bengal.	Rajshahi.	Rajshahi	Boalia	0·66	0·06	0·06	0·08	...	...	0·02	...	1·47	0·58	0·72	0·05	1·96	0·54	0·15	2·14	0·58	0·12	...	0·02
			Nator	2·08	...	1·02	..	0·12	...	0·07	...	1·43	...	1·45	...	0·13	0·36	0·72	1·56	0·71	0·19	...	...
			Naugaon	0·98	...	1·04	0·65	2·66	...	0·05	...	0·20	...	0·53	0·47	0·84	0·91	0·30	0·88	3·55	0·04	...	...
			Lalpur	0·80	0·29	0·03	...	...	...	0·90	...	1·60	1·67	1·10	0·04	0·60	1·11	0·52	1·65	0·04	0·07	...	...
			Manda	...	5·76	...	2·25	...	0·45	...	...	...	1·51	0·45	1·75	4·13	0·40	..	1·61	...	...	...	...
			Mahadebpur	1·00	0·16	0·14	0·29	0·06	...	0·29	...	0·38	...	0·21	0·73	6·04	1·13	...	0·87	2 36	...	...	...
		Dinajpur	*Nithpur*	0·79	0·12	1·13	0·56	...	...	1·62	...	1·60	...	2·23	2·47	3·47	0·02	...	0·78	0·52	0·05	...	...
			Nawabganj	...	...	0·90	...	...	...	...	..	1·02	1·05	...	0·30	..	...	2·30	0·40	0·20	0·80	1·80	...
			Gangarampur	0·13	...	0·04	2·65	...	...	0·60	...	...	0·30	3·10	2·04	1·17	0·48	1·73	1·90	0·70	...	...	...
			Churaman	...	...	0·15	...	0·13	...	0·59	..	0·07	...	0·84	1·72	0·22	...	0·10	1·03	1·34	0·12	...	...
			Raiganj	...	...	...	2·15	...	...	0·07	...	...	...	0·05	3·13	0·41	...	1·03	1·80	1·93	0·22	...	...
			Dinajpur	0·13	...	...	0·12	...	...	0·04	...	...	...	2·15	2·85	0·05	...	2·40	2·45	0·70	0·21	0·58	0·64
			Balurhat	0·74	...	...	1·80	0 09	...	0·06	0·11	0·42	0·03	2·42	0·24	0·01	0·36	1·63	0·17	0·42	0·12	...	...
			Thakurgaon	...	...	...	...	...	...	...	...	...	...	4·00	0·32	0·12	...	1·02	0·28	...	0·23	...	...
			Setabganj	...	...	...	0·05	...	...	...	...	...	...	1·75	1·25	0·15	...	0·15	3·31	0·20	...	0·60	...
			Ramganj	...	...	...	0·01	...	...	0·31	...	...	...	0·72	0·17	0·12	...	0·41	2·89	0·19	0·04	...	0·89
			Atwari	...	3·29	...	...	..	...	0·75	...	0·30	...	2·55	1·15	0·45	...	0·79	0·06	...	1·27	0·16	1·69
			Birganj	0·01	...	...	0·06	...	...	0·93	...	...	...	1·90	1·52	0·14	0·03	0·42	0·40	0·09	0·07	0·17	0·38
			Parbatipur	0·51	...	...	0·24	...	...	0·15	...	...	...	0·89	0·28	0·35	...	0·64	2·42	0·12	0·11	1·98	1·28

in Bengal in June 1902.

21	22	23	24	25	26	27	28	29	30	Number of rainy days.	Average number of rainy days.	Total rainfall for the month.	Average rainfall for the month.	Heaviest rainfall during the month.	Total rainfall from 16th May up to 30th June 1902.	Average rainfall from 16th May up to 30th June.	Station.	District.	Division.	Meteorological Division.
...	...	0·76	...	...	...	...	...	...	0·16	10	11·13	11·06	9·98	2·79	12·07	13·02	Kalna ...	Burdwan.	Burdwan.	South-West Bengal.
0·24	...	...	...	...	...	...	...	0·03	0·08	7	12·71	6·94	10·16	1·48	9·31	13·43	Burdwan			
...	0·42	...	...	0·23	1·21	...	0·34	...	...	13	11·70	7·13	9·99	1·21	8·87	12·89	Katwa.			
...	...	...	...	...	...	...	0·15	...	...	8	12·21	7·01	9·93	3·20	9·15	12·42	Raniganj.			
0·24	...	...	...	...	0·54	...	1·65	...	...	6	11·73	3·79	10·70	1·65	5·47	13·86	Mankur.			
...	0·04	1·01	...	0·03	0·01	...	0·12	...	0·25	8	12·12	3·23	13·40	0·90	4·68	17·36	Shri	Birbhum.		
...	0·04	...	...	...	1·18	...	0·45	0·28	0·62	9	11·06	6·38	10·68	1·72	8·03	18·08	Hetampur ...			
...	...	...	...	...	...	...	0·33	...	0·67	9	12·07	4·77	10·62	1·10	8·88	12·96	Rampur Hat.			
...	0·04	...	0·01	0·10	...	...	...	...	...	7	11·40	2·88	10·30	1·15	4·70	13·58	Bolpur.			
...	...	...	...	...	0·07	...	...	0·33	0·53	13	12·02	5·05	11·40	0·02	8·81	14·17	Murari			
...	...	...	...	0·15	0·25	...	1·67	...	0·13	10	12·71	4·78	11·41	1·67	7·48	13·45	Labpur.			
...	0·17	...	...	0·01	...	...	0·02	...	...	6	11·89	3·90	10·32	2·19	5·99	12·65	Bankura	Bankura.		
...	...	...	0·31	...	...	0·03	0·02	0·02	...	6	12·24	3·88	11·17	1·65	4·89	14·18	Vishnupur			
...	0·34	...	...	...	0·55	...	0·08	...	...	8	12·10	3·02	10·19	0·86	6·17	12·87	Mahara			
0·03	0·08	...	0·09	0·35	...	...	...	...	...	5	12·71	2·43	13·37	0·80	3·71	15·00	Khatra			
...	0·73	0·27	...	0·08	...	...	0·96	0·03	0·04	9	12·50	5·20	10·43	1·69	7·44	14·04	Indas.			
...	0·36	...	1·18	...	...	...	...	...	...	7	10·88	6·34	10·73	1·50	9·34	13·22	Kotalpur.			
...	...	...	...	...	...	...	0·25	...	...	5	11·10	3·25	9·80	1·98	4·80	11·99	Onda.			
...	0·30	0·37	...	...	0·22	...	...	...	0·37	7	10·63	4·03	11·35	1·15	4·83	13·94	Gangajalghati.			
...	...	0·62	...	...	...	...	...	...	...	8	11·67	3·00	11·44	1·49	4·82	15·25	Raipur.			
...	0·09	...	...	...	...	...	0·87	...	...	6	10·81	3·57	10·54	0·87	0·23	13·21	Sonamukhi.			
...	...	...	...	...	...	...	...	...	...	7	10·77	3·15	9·78	0·75	4·42	12·70	Contai ...	Midnapore.		
...	1·68	...	...	...	...	...	...	...	0·59	6	11·17	3·23	9·76	0·98	5·93	12·53	Tamluk.			
...	...	0·09	0·90	...	...	0·19	...	0 20	0·06	9	12·00	5·37	10 51	1·68	6·93	13 07	Midnapore.			
0·01	0·25	...	...	...	...	...	...	...	0·35	9	11·83	4·60	10·64	1·11	6·81	12 85	Ghatal.			
...	...	...	1·70	...	...	0·36	...	...	0·04	8	12·15	2·92	10·12	1·11	7·15	13·80	Kukrahaty.			
...	0·16	0·04	...	...	...	0·24	...	...	0·17	10	11·27	6 30	11·18	1·70	7·89	14·36	Garhbeta.			
...	...	...	0·10	0·12	...	0·18	0·40	...	0·17	6	13·50	1·81	10·79	0·45	2·62	13·84	Panskura			
...	...	...	...	...	0·13	...	...	...	0·89	11	11·25	4·45	9·82	1·21	5·76	12·55	Dantan.			
...	...	0·27	...	...	0·11	...	...	...	0·73	10	12·13	6 78	9·06	1·34	9·56	12·87	Serampore	Hooghly.		
...	1·64	0·22	0·14	...	...	...	...	...	0·41	13	12 18	9·50	10·82	1·70	12·78	14 20	Hooghly.			
										12	12·13	6·20	10·31	1·64	9·64	13·24	*Arambagh (Jahanabad).*			
...	0·24	0·18	...	...	...	1·08	...	...	0·38	11	12·05	4·33	11·41	1·08	8·90	14·01	Howrah ...	Howrah.		
...	0·28	0·84	...	...	...	...	0·07	...	0·14	8	12 31	5·88	10·10	1·44	9·19	13·08	Mohesreka			
...	0·28	0·68	...	...	...	...	...	...	0 25	12	14·56	4·55	11·20	0·88	9·02	14·33	Uluberia			
...	0·34	0·16	...	...	0·03	...	...	...	0·08	6	?	2·12	?	0·60	5·85	?	*Amta.*			
...	0·07	...	...	...	...	0·07	0·14	...	...	8	12·10	5·87	10·74	1·77	8·08	13·49	Saugor Island	24-Parganas.		
...	0·36	0·06	1·00	...	...	0·08	...	0·65	1·05	10	11·07	7·56	10·30	1·30	11·11	13·18	Diamond Harbour.			
...	0·30	0·38	0·22	...	...	...	...	...	0·32	13	?	5 98	?	2·00	10·65	?	*Budge-Budge.*			
...	0·13	...	...	...	...	0·53	...	...	0 32	15	13·53	5·32	11 73	1·52	10·59	15·14	Canning Town.			
...	0·20	0·28	0·02	...	...	0·79	...	...	0·72	13	12·88	5·47	11·04	1·04	10·60	13·99	Alipore (Obsy.)			
...	...	...	...	...	...	...	...	...	0·95	10	12 00	6·24	10·39	1·01	8·87	13·11	Barrackpore			
...	...	0·40	...	...	...	...	...	...	1·47	9	12 39	7·64	11 05	2·61	11·62	14·11	Dum-Dum.			
...	...	...	0·05	...	0 05	...	...	...	0·94	11	12·35	7·57	10 28	2 53	10·17	13·17	Baraset.			
...	...	...	...	...	...	...	...	...	3·26	10	13·19	8 20	11·64	3·26	11·66	15·02	Basirhat.			
...	0·15	...	0·03	...	...	...	...	...	0·20	10	13·10	5·44	9·73	1·10	11·06	13·18	Ranaghat ...	Nadia.		
0·05	0·11	...	...	0·05	1·74	...	...	...	...	9	13·19	5·66	9·88	1·74	7·94	13·05	Krishnagar.			
0·11	0·55	...	...	...	...	...	...	0·55	1·05	11	12·35	6 49	9·50	1·65	10·77	15·61	Chuadanga.			
...	0·13	...	...	0·58	0·40	0·01	...	...	0·33	13	12·39	8·69	10·02	1·38	15·87	15·45	Meherpur			
	0·08			0·44				1·18	2·20	12	13·55	13·37	10·83	2·23	18·95	15·20	Kushtia.			
...	...	...	...	0·83	0·08	...	0·25	0·04	0·02	8	12·69	6·56	10·34	1·65	9·77	12·88	Kandi ...	Murshidabad.	Presidency.	
0·01	1·07	...	...	0 30	0·35	...	...	0·03	...	9	12·00	5·62	9·76	1·43	8·03	12·98	Berhampore			
0·48	0·20	...	0·50	0·18	...	...	...	...	...	11	11·52	6 29	9·21	1·58	13·99	12·55	Lalbagh.			
...	...	...	...	0·38	0·32	...	...	0·04	...	16	11·52	4·74	9·56	0·89	14·07	12·81	Azimganj.			
...	...	...	...	...	0·35	...	...	0·26	...	9	11·78	5·10	9·57	1·80	8·53	12·51	Jangipur.			
0·09	...	...	...	0·15	0·30	...	...	...	...	12	11·81	4·27	10·03	0·80	8·37	13·32	Lalgola.			
...	...	...	...	0·60	...	...	...	...	0·20	11	12·64	8·20	11·63	1·74	13·44	15·70	Akriganj.			
0·85	0·32	...	...	0·80	0·90	...	...	0 22	0·18	15	11·14 13·16	7·48	10·33 10·80	1·00	13·67	13·72 13·95	Patkabari. Dumkal.			
...	0·61	...	...	...	...	...	...	...	2·40	15	13·80	12·75	11·22	2·49	17·97	14·60	Narail ...	Jessore.		
...	0·30	...	...	0·03	...	...	0·05	0·13	1·04	12	14·55	7·04	13·17	1·64	16·43	17·14	Jessore.			
0·02	0·50	...	...	...	...	...	...	...	1·23	11	14·07	6·87	11·98	1·55	15·83	15 94	Jhenidah.			
0·04	0·34	...	...	...	0 20	0·30	...	...	1 80	11	13 60	9·33	11·75	2·81	14·18	16·06	Magura.			
...	0·12	...	...	...	0·72	...	...	...	0·82	13	12·58	7·05	10 33	1·80	12·36	13·76	Bangaon.			
...	0·40	...	...	...	...	...	...	...	1·61	10	13·71	7·10	11·69	1·90	17·05	15·04	Satkhira ...	Khulna.		
...	0·08	...	...	...	...	...	...	0·94	2·05	13	15·00	10·80	14·47	2·15	14·38	18·30	Bagerhat.			
...	...	0·05	...	...	...	...	0·43	..	3·00	10	15·83	10·75	12·94	3·00	15·52	16·06	Khulna.			
...	...	0·13	...	...	...	...	0·00	...	3 50	10	?	10·42	?	3·50	18·21	?	*Kaligunj.*			
...	0·37	...	...	...	1·25	...	0·10	...	0·78	9	11·55	6·02	12·42	1·42	18·14	15·93	Nakipur.			
...	...	...	...	...	...	...	...	...	4·92	10	?	11·34	?	4·92	15·77	?	*Dumuria.*			
...	0·08	...	...	...	...	...	...	0·18	5·50	11	15·20	12·03	12·19	5·50	16·30	15·90	Rampal.			
...	...	...	...	...	...	...	...	...	0·35	9	?	6·14	?	1·63	11·26	?	*Kaliaroa.*			
...	0·02	...	...	...	...	...	...	...	2·05	9	?	11·26,	?	3·18	18·27	?	*Paikgacha.*			
...	0 20	...	...	...	...	...	3·15	...	...	11	?	8·76	?	3 15	15·10	?	*Mollahat.*			
...	0·85	...	...	...	...	0·15	0·15	0·12	2·50	18	?	17·74	?	3·50	30·30	?	*Morelganj.*			
...	...	...	...	...	...	...	...	...	1·80	12	?	7·84	?	1·80	17·62	?	*Tala.*			
...	...	...	...	0·70	1·36	...	...	0·46	0·35	14	12·56	11·32	10·70	2·14	15·81	14·08	Boalia ...	Rajshahi.	Rajshahi.	North Bengal.
...	...	...	...	...	0·27	...	...	1·35	2·13	14	11·77	13·60	10 78	2·13	17·27	15·12	Nator.			
...	0·61	...	...	...	...	...	...	...	2·55	14	12·82	16·27	12·13	3·55	10·25	16·08	Naugaon.			
...	...	...	...	0·50	...	...	...	0·08	2·32	15	10·53	14·12	8·48	2·32	15·62	12·79	Lalpur.			
0·22	...	...	...	...	...	...	...	0·20	2·95	13	11·53	18·03	9·07	4·12	20·76	12·81	Manda.			
...	0·18	...	...	...	...	0·25	...	0·02	3·05	14	12·08	17·30	11·20	6·04	20·40	14·06	Mahadebpur.			
...	0·42	...	...	...	0·23	0·07	...	...	2·86	14	?	18·53	?	3·47	20·46	?	*Nithpur* ...	Dinajpur.		
...	...	...	...	...	0·19	0·36	...	...	3·30	12	?	13·32	?	3·30	23·00	?	*Nawabganj.*			
...	...	...	...	...	...	...	0·18	...	2·17	12	?	16·65	?	3·10	20·02	?	*Gangarampur.*			
...	...	...	...	...	...	...	...	...	1·68	11	11·57	8·86	11·34	1·93	10·29	14·50	Churaman.			
...	...	...	...	...	...	...	0·10	...	1·45	9	12·80	12·14	13·28	3·13	16·01	16·78	Bangaj.			
...	0·27	...	...	...	0·16	...	0·51	0·04	1·06	13	13·45	14·16	16·13	2·85	18·43	20·69	Dinajpur.			
...	...	...	...	...	0·35	...	0·19	...	1·95	16	12·94	17·28	11·33	5·17	10 91	15 26	Balughat			
...	...	...	...	...	...	...	2·72	...	1·32	9	14 31	10·15	10·83	4·00	13·40	21·01	Thakurgaon			
...	...	...	...	...	...	...	0·65	0·15	1·85	10	?	10·10	?	3·80	15·67	?	*Setabganj.*			
...	...	...	...	...	...	...	2·83	0·02	2·00	10	?	10·63	?	2·89	14·85	?	*Ramganj.*			
...	...	...	...	...	0·04	...	1·31	0·24	0·68	13	?	14·68	?	3·89	17·20	?	*Atwari.*			
...	0·06	...	...	0·41	...	...	3·56	0·13	1·32	11	?	11·10	?	3·58	17·06	?	*Birganj.*			
							0·70	0·10	5·16	16	?	15·34	?	5·16	21·13	?	*Parbatipur.*			

Table of Rainfall recorded at stations

Meteorological Division.	Division.	District.	Station.	1	2	3	4	5	6	7	8	9	10	11	12	13	14	15	16	17	18	19	20
North Bengal—*concluded.*	Rajshahi—*concluded.*	Jalpaiguri ...	Jalpaiguri	...	...	0·20	...	0·25	...	0·28	0·58	10·10	0·55	0·50	0·55	0·15	0·05	0·95	3·05	...	1·25	5·63	6·11
			Alipur Duar	...	...	...	...	0·33	...	0·38	..	1·73	...	2·31	0·29	0·10	..	...	...	...	0·78	2·54	5·67
			Falakata ...	...	...	...	...	0·20	...	0·35	0·15	0·30	0·70	0·18	...	...	0·40	...	...	...	1·02	2·35	4·40
			Debiganj ...	...	...	...	0·18	0·21	...	0·01	0·16	0·30	...	0·79	0·61	0·18	0·13	1·44	0·20	0·12	0·29	0·31	0·75
			Bhagatpur (Nagrakatta).	...	...	1·32	0·52	0·42	0·04	0·25	...	0·19	0·17	0·49	...	...	0 61	1·75	1·85	0·03	0·53	4·80	1·90
			Raza	...	...	..	1·02	0·39	0·05	...	0·05	0·05	0·64	0·18	0·17	0·08	0·78	0·10	0·26	0·10	1·04	10·80	5·55
			Kalchini ..	...	...	...	0 99	0·02	0·04	...	0·19	0·15	0·15	0·13	0·60	0·03	...	...	...	0·34	7·95	4·32	1·46
		Darjeeling .	Siliguri	...	1·16	0·85	0·45	1·21	...	0·25	0·19	0·03	1·04	1·34	0·86	0·35	0·03	1·55	1·12	0·16	7·52	2·75	3·32
			Darjeeling	0·02	0·96	...	1·56	1·00	0·88	0·63	0·10	0·07	0·63	2·97	2·62	0·38	0·90	0·51	0·65	0·86	1·04	1·07	1·62
			Kalimpong	...	...	...	2·00	1·06	0·02	0·22	0·18	0·30	0·32	1·94	0·82	0·09	0·42	0·24	0·12	0·41	3·93	0·82	1·14
			Mongpoo ...	..	...	...	3·45	2·22	0·08	0·09	...	0·54	0·10	2·35	2·45	1·05	0·62	...	1·10	0·99	2·20	0·65	1·83
			Kurseong ...	...	0·17	...	3·08	0·82	0·02	0·23	...	0·34	0·02	1·42	1·33	3·25	0·94	1·23	1·72	1·35	2·74	1·00	1·12
			Pedong ...	0·10	...	...	...	0·25	0·11	0·30	...	0·30	0·60	1·61	0·30	0·10	0·23	0 56	0·45	0·70	1·60	0·80	0·40
		Tibet ...	Yatung	...	...	...	0·11	0·45	0 33	0·15	0·11	0·57	0·67	0·85	0·81	0·22	0·27	0·11	0·27	0·60	0·78	1·02	1·04
		Cooch Behar	Dinhatta ..	...	...	...	...	1·39	...	0·61	...	...	...	0·04	0·12	0·52	1·75	...	...	0·02	0·45	0·93	5·15
			Cooch Behar .	...	...	...	...	0·26	...	0·75	0·23	2·28	0·04	0·07	0·25	0·32	0·24	...	...	0 02	0·51	3·56	5·04
			Mekliganj	...	...	...	.	0·43	0·02	0·05	...	0·30	0·07	1·14	0·35	0·09	0 10	0·13	0·12	...	0·18	1·40	4·19
			Mathabhanga	...	...	...	...	0·70	...	0 51	...	0·44	0·67	0·08	0·20	0·73	0·10	0·02	0·06	0·01	0·63	4·45	5·14
			Pulbari ..	...	...	...	...	0·42	0 34	0·15	0·02	0·32	1·27	0·02	0·47	0·47	0·31	...	...	0·05	1·26	1·66	10·50
		Rangpur ...	Bhawaniganj (*Gaibanda*).	0·31	...	0·55	1·97	3 13	1·80	0·30	1 58	0·35	0·72	0·18	0·05	...	0·10	...	2·34	0·31	2·11	0·92	1·01
			Rangpur ..	0·16	...	...	0·12	0·36	0·18	...	...	...	...	0·16	...	6·09	...	0·24	1·34	0·38	0·49	1·39	1·12
			Peerganj ...	...	...	...	0·11	...	...	...	...	0·51	...	2·54	...	0·78	...	...	1·65	0·26	0·75	1·85	1·30
			Kurigaon	0·25	...	...	...	1·20	...	...	...	...	...	0·45	1·50	...	0·18	1 86	...	0·29	3·79	2·45	2·25
			Gobindganj ...	0·35	0·27	1·06	0·08	0 20	0·22	0·05	0·10	0·95	0·20	1·10	1·15	1·47	0·04	0·96	1·18	0 39	1·08	...	...
			Bagdogra (*Nilphamari*)	...	...	...	...	...	...	...	...	0·22	...	2·48	0·76	...	...	...	1·52	0 32	0·10	1·00	0·48
			Ulipur .	0·60	...	...	0·80	2 80	...	...	...	0·20	..	0·13	0·50	0·08	0·13	...	0·30	1·53	...	1·50	0·67
			Sunderganj .	...	..	...	1 32	0·01	0·17	...	...	0·02	0·69	0·31	0·15	0·01	0·06	0·03	1·59	0·20	0·15	1·54	1·38
			Saidpur	...	...	...	0·18	...	0·08	...	...	...	..	2·48	0·38	1·10	...	0·40	0·65	...	...	1·60	0·20
		Bogra ...	Sherpur ..	1·69	...	1·08	3·80	...	0·20	...	...	...	...	1·07	0·10	0·81	0·05	0·48	0·63	1·19	0·65	...	...
			Nowkhilla .	...	...	1·13	0·06	...	...	0·86	...	0·16	0·47	1·50	...	1·12	0·33	0·82	0·55	0·56	0·16	...	...
			Bogra ..	1·32	...	0·13	0·92	0·06	...	0·02	...	...	1·22	0·17	...	0·78	0·28	0·62	0·38	1·76	0·08	...	...
			Panchbibi	...	...	3·97	1·15	..	...	...	1·19	2·15	3·79	1·03	...	...	...	2·11	0·33	0·09	...	...	...
		Pabna ...	Pabna ..	1·22	3·30	...	...	...	...	0·04	...	0·15	...	0·50	...	0·69	1·39	1·20	3·35	3·52	...	...	...
			Sirajganj ..	1·61	...	3·40	0·04	...	...	0·25	..	0·33	1·20	0·05	...	...	1·85	4·15	1·73	2·19	0·18	0·33	...
Dacca.		Dacca ...	Munshiganj...	1·31	0·09	...	...	1·45	...	...	...	0·16	0·00	...	...	0·30	2·26	1·08	1·11	3·47	0·11	...	...
			Dacca ..	1·47	0·95	0·03	0·20	1 10	0·01	...	0·42	0·13	1·39	...	...	...	2·20	1·28	0·54	1·75	0 14	0·01	...
			Narayanganj	1·81	0·41	0·09	0·24	1·26	...	...	...	0·75	0·67	...	...	0·05	4·78	0·75	1·93	1·86	0·13	...	...
			Manikganj ...	1·80	1·20	...	0·13	0·52	0·10	..	3·50	...	0·95	1·10	...	...	0·60	1·80	0·84	2·10	0 51	...	0·18
			Jaydebpur ...	2·35	0·58	0·23	...	0·15	3·52	...	0·75	...	...	...	...	...	3·88	0·86	1·25	2·50	0·30	0·05	...
		Mymensingh...	Kishorganj	0·43	0·10	0·34	0·49	0·14	0·18	...	0·06	0·05	0·08	...	0·19	0·08	1·82	0·65	0·85	5·15	0·40	0·02	...
			Atia (*Tangail*)	1·36	0 06	0·02	1·82	...	0·21	0·04	0·05	...	0·05	...	...	0·02	0·61	1·34	0·18	2 00	0·30	0·09	...
			Mymensingh	1·33	...	0·37	3 60	...	1·70	...	0·07	0·04	1·23	0·60	...	3·70	1·02	0·39	2·76	7·40	0·30	...	...
			Jamalpur .	...	...	1·56	...	0·41	...	0·21	...	0·26	0·96	0·05	...	0·18	...	0·10	1·45	0·45	0·46	...	0·63
			Netrakona ...	0·78	...	3 95	0·55	...	0·20	...	0·95	0·20	1·55	0·35	0·12	0·97	0·65	1·05	0·98	3·33	0·18	1·10	2·05
			Subarnakhali	Not recorded.																			
			Durgapur .	1·70	...	1·07	0·62	...	0·20	...	...	1·00	...	...	...	...	0·45	1·00	2·80	4·50	1·50	1·60	0·70
			Sherpur Town	0·45	...	1 15	0 04	...	...	2·25	...	0·10	0·50	0·12	2·00	1·85	0·10	0·07	2·10	0·50	0·50	0·25	1·83
			Diwanganj ...	...	...	0·15	...	...	...	...	...	0 75	...	...	...	0·23	...	2·94	0·35	2·55	...	1·85	0·45
			Nalitabari ...	0·60	0·45	0·50	0·30	0·15	...	...	0·35	0·30	0·13	...	1·40	0·21	0·04	0·77	5·23	2 23	1·05	3·61	1·02
		Faridpur ..	Madaripur ...	2·14	0·57	0·02	...	0·83	0·12	...	...	...	1·97	0·13	0·58	0·16	1·75	0·36	0·51	0·07	...	0·08	0·01
			Faridpur ..	2·10	0 34	...	0·12	0·23	0 22	..	0·29	0·32	1·26	0·38	0·76	0·03	0·33	0·66	3·60	...	...	...	...
			Goalundo .	1·13	0·28	...	...	. .	0·60	...	0·44	0·02	0·50	0·15	0·62	...	0·90	0·40	1·07	3·54	...	...	...
		Backergunge	Patuakhali ...	0·50	1·73	0·28	0·52	0·03	2·23	...	0·07	0·02	0·53	0·07	1·65	2·15	4·50	2·65	0·42	0·16	0·05	...	0·21
			Pirojpur ..	0·41	0·85	0·33	0·14	...	0·62	...	...	0·05	0·63	...	1 89	0·78	5·91	2·26	0·08	...	3·93	...	0·08
			Barisal ...	1·78	2·32	0·56	0·86	1·45	1·28	...	...	...	0·20	0·98	0·12	4·65	4·10	2·89	1·63	0·47	0·08	—	...
			Gaurnadi ...	2·27	3·21	0·03	0·41	1·04	0·12	..	..	...	0·71	0·07	0·21	0·76	1 24	0·01	0·44	0·05	0·03	0·25	0·05
			Bhola ...	1·69	1·77	0·35	2·27	0·87	0·19	...	0·03	0·02	0·17	0·20	0·26	1·06	2·18	3·86	2·43	2·72	0·04	...	0·02
			Daulatkhan ..	1·53	1·05	0·26	1·90	2·15	0·52	...	...	...	0·86	...	0 09	5·08	2·02	2·56	6·18	0·45	0·04	...	...
			Bauphal ...	...	2·29	0·31	2·31	1·40	1 93	...	...	...	1·67	...	0·78	1·82	4·61	4·63	3·84	1·15	...	...	...
Chittagong.		Hill Tippera .	Agartala ..	...	...	...	2·12	...	...	...	...	1·47	0·11	1·52	0·37	3·05	1·20	2·10	4·20	1·30	0·37	...	...
		Tippera ...	Comilla .	1·76	0·90	...	0·46	0·85	...	...	0·16	0·01	0·04	0·01	0·33	0·16	1·70	0·83	7·02	1·56	0·19	...	...
			Chandpur ..	1·98	0·56	0·13	1·55	1·31	...	...	...	...	0·59	0·12	...	0 63	3·45	0·76	2·07	1 43	0·15	...	...
			Brahmanbaria	0·81	...	...	0·53	1·30	1·67	...	0·13	0·82	...	0·00	0·18	...	2·00	1·55	0·68	2·05	0·50	0·03	...
			Ramchandrapur.																				
			Nasirnagar ..	..	...	2·10	...	2·05	...	...	2·00	...	0·40	0·70	...	0·03	...	2·15	1·00	7·00	0·10	...	...
			Daudkandi ...	1·36	0 34	1·10	1·43	1·05	...	...	...	...	0·38	..	...	0·20	2·10	0·44	2·02	2·06	0·13	...	...
			Kasba ...	1·04	0·16	0·05	0 85	0·05	0·06	0·03	...	1·02	...	...	...	0·78	0·14	1·54	1·73	2·10	1·10	...	...
			Laksam ...	0·50	0·40	0·30	0·40	0 40	0·35	0·70	...	...	0·11	...	0·12	0·22	5·40	1·60	4·40	0·05	0·75	...	0·03
		Noakhali ...	Noakhali ...	1·34	0 74	0·80	1·33	0·39	0·48	..	1·07	..	0·65	...	0·19	0·62	2·80	3·33	1·18	1·71	0·04	0·04	...
			Feuny ...	2·54	0 34	0·35	1 01	0·07	...	...	0·13	0·03	0·40	0·09	0·08	1·08	4·02	2·85	6·10	1·07	0·13	...	0·15
			Harishpur ...	0·90	0·46	0 24	2·45	0·70	...	...	0·32	1·30	0·50	...	0·80	0·70	3 10	3·60	1·30	3·20	0·33	...	1·20
			Ramganj ...	1·70	0·60	0·10	2·15	1·00	...	...	0·30	...	3 28	...	...	0·10	4·80	0·70	1·30	2 70	0·10	...	...
			Chhagalnaya	1·25	0 08	0 11	0 57	0·20	0·25	...	0·14	0·04	0·70	0·05	2·09	0·60	1·95	3·08	3·02	3·45	0·37	...	...
			Hatya ...	2·76	1·9	1·02	0·56	0·84	1·90	...	0·65	...	...	...	1·61	3·50	4·34	3·57	1·32	1·37	0·08	...	0·05
			Lakhmipur ..	2·00	0·82	0·32	1·10	1·40	...	...	...	...	0·38	...	0·02	2·75	7·50	1·35	3·05	1·37	...	0·04	0·47
		Chittagong ...	Cox's Bazar ...	...	.	...	0·09	2·30	1 23	...	2·60	0·61	0·20	...	0·15	0·83	4·09	1·67	0·18	2·12	0·22	5·85	1·40
			Chittagong	0·08	0·30	0·01	0·65	1·61	0·01	...	1·30	0 29	1·26	0·47	0·06	0 74	5·70	6·28	0·25	1·80	0·74	0·91	0·70
			Kutubdia ...	...	...	...	0·26	0·77	0·08	...	1·72	0·20	...	0·20	...	0·65	4·17	5·47	0·50	1·42	1·30	1·81	0·13
			Satkania .	...	0·25	0·11	0·17	...	...	...	0·95	0·73	0·28	0·15	0·35	0·81	5·17	10·20	0·47	0·42	0·58	1·01	0·15
			Kodala ..	0·12	0·10	1·26	0·71	...	...	1·15	0·35	0·70	1·10	0·35	1·51	3·05	6·10	0·15	0·92	0·64	1·80	0·37	0·02
			Fenoa .	0·38	0·04	3·96	0·33	...	...	0·53	0·17	0·63	0·47	1·64	1·37	3·50	5·26	1·27	2·25	1·33	0·05	0·11	0·10
			Mirsarai ...	0·41	0·52	0·71	0·07	0·12	...	...	0·20	0·13	1·24	0·07	1·23	1·12	3 81	6 03	1·50	1·34	0·23	0·06	0·25
		Chittagong Hill Tracts.	Rangamati ..	0·04	...	1·62	0·33	0·23	0 84	...	1·02	0·07	0·02	1·59	2·28	1·80	2·70	4·48	0·30	1·60	0·96	0·81	0·38
			Bandarban ...	...	...	0·33	1·60	1·41	0·22	...	2·45	0·45	0·03	1·11	1·02	0·55	2·06	0·86	0·16	0·18	1·78	0·71	0·44
			Barkal ...	...	0·22	1 60	0·19	...	1·32	...	1·62	...	...	1·52	3·00	0·41	1·66	4·05	0·52	1·20	0·80	1·35	1·27

In Bengal in June 1902—*continued.*

21	22	23	24	25	26	27	28	29	30	Number of rainy days.	Average number of rainy days.	Total rainfall for the month.	Average rainfall for the month.	Heaviest rainfall during the month.	Total rainfall from 16th May up to 30th June 1902.	Average rainfall from 16th May up to 30th June.	Station.	District.	Division.	Meteorological Division.
...	1·00	...	...	0·24	...	1·09	3·75	1·20	0·40	20	18·66	27·79	25·23	6·11	33·97	32·54	Jalpaiguri ...	Jalpaiguri.	Rajshahi—*concluded.*	North Bengal—*concluded.*
1·20	0·00	...	...	0·46	...	1·00	7·93	1·20	3·09	15	16·53	36 07	29·40	9·84	39·18	38·39	Alipur Duar.			
0·62	...	0·15	...	0·07	...	4·26	5·65	1·05	2·80	10	16·33	29·65	23·35	9·35	33·06	31·15	Falakata.			
...	0·15	...	...	0·44	...	5·35	0·86	0·52	0·26	20	15·80	13 19	10 73	5·35	17·64	25·94	Debiganj.			
0·60	0·85	...	0·93	1·40	3·25	2·10	0·22	0·15	1·25	22	20·75	25·30	22·90	4·80	34·68	33·03	Bhawatpur (Nagrakatta)			
2·15	6·31	1·00	0·25	1·91	3 79	0·45	1·80	0·04	1·92	22	22·75	41·49	39·27	10·80	49 31	52·21	Baxa.			
3·65	0·14	...	3·75	1·63	1·32	1·77	0·22	0·07	0·19	19	?	30·04	?	7·05	33·94	?	*Kalchini.*			
0·29	0·43	...	...	0·02	0·56	2·05	2·20	1·20	0·50	23	19·67	31·53	23·57	7·53	37·06	29·92	Siliguri	Darjeeling.		
...	0·03	0·02	...	...	0·06	0·04	0·85	0·26	1·69	21	20 81	23 10	23·40	2·07	25·73	26·24	Darjeeling.			
...	...	0·38	0·01	...	0·11	0·15	0·47	0·50	0·47	21	16·21	16·50	16·80	3·93	18·75	20·25	Kalimpong.			
0·10	0·45	0·22	...	0·03	0·10	0·03	0·60	0·30	1·96	21	15 88	24·11	22·61	5·45	28·46	29·19	Mongpoo.			
...	...	...	...	...	...	0·05	0 56	0·07	1·94	18	22·27	23·23	31·86	3·25	26·41	40·10	Kurseong			
0·04	...	...	...	...	...	1·30	1·21	0·05	0·45	20	21·75	12·06	17·19	1·01	17·07	22·01	Pedong.			
0·30	0·25	0·10	0·06	0·07	...	0·02	...	0·35	0·01		17·00		7·17			9·69	Yatung ...	Tibet.		
0·04	...	0·15	0·41	0·07	...	4·11	0·18	2·55	1·22	14	18·09	19·71	26·70	5·15	28·65	38·46	Dinhatta	Cooch Behar.		
0·04	1·30	...	0·10	0·88	0·24	0·77	1·64	6·20	2·10	18	19·24	27·64	32·15	8·04	33 71	41·17	Cooch Behar			
...	1·45	...	...	...	...	1·90	1·59	5·60	0 29	15	18·09	19·26	25·81	5·50	26 58	33·83	Mickliganj.			
0·02	3·20	0·01	...	0·05	0·64	0·85	2·04	7·08	2·19	16	18·55	32·82	28·23	8·14	37·39	36·88	Matabhanga			
0·55	2·70	0·02	0·75	1·67	0·66	0·86	1·26	2·09	3·90	20	15 57	31·12	24·31	10·50	40·47	34·79	Fulbari.			
...	0·37	0·22	...	0·12	...	...	0·63	0·03	2·03	21	13·70	21·22	15·41	3·12	31·96	21·21	Bhawaniganj (*Gaibanda*)	Rangpur.		
0·34	0·84	0·36	...	...	..	...	0·48	0·84	2·76	17	15·61	11·57	20·01	2·76	21·87	26·64	Rangpur			
...	...	...	...	...	...	...	...	0·48	2·54	11	14·00	12·67	14·60	2·54	21·13	19·20	Peerganj.			
...	1·36	0·46	...	...	...	...	1·29	1·21	4·00	15	15·84	23·21	22·34	4·00	35·19	30·37	Kurigram			
...	6·10	...	...	...	...	...	...	...	3·40	17	13·25	15·20	12·58	3·40	20·04	16·84	Gobindganj			
...	...	...	...	...	...	...	2·50	...	1·40	10	16·58	10·87	21·43	2·50	15·27	28·48	Bardokra. (*Nilphamari*).			
...	...	1·80	...	...	...	...	...	0·55	0·41	8·16	15	13·13	15·35	17·30	8·16	20·49	26·44	Ulipur		
1·19	0·31	0·29	...	...	...	1·67	1·19	3·52	0·02	16	10·75	15·54	12·89	3·52	21·26	19·58	Sunderganj			
...	...	...	0·30	0·45	...	...	2·55	...	1·35	12	?	11·60	?	2·55	16·35	?	*Saidpur.*			
...	...	0·97	...	...	...	...	...	1·15	2·88	14	13·12	17·55	11·62	3·80	21·86	16·61	Sherpur ...	Bogra.		
1·31	1·08	...	...	...	...	...	...	0·14	3·64	15	13·76	13·89	13·02	3·64	19·50	17·81	Nowkhilla.			
0·55	0·32	...	...	...	...	...	...	0·62	5·18	14	14·35	14·97	14·48	5·18	19·30	19·40	Bogra			
...	...	...	...	...	...	...	...	...	3·99	9	13·32	10·80	13·29	3·99	26·06	16·75	Panchbibi.			
...	0·37	...	...	0·62	...	...	...	0·37	3·02	12	13·94	18·54	11·41	3·35	25·80	15·43	Pabna ...	Pabna.		
...	1·20	...	...	0·06	...	...	...	0·47	2·62	14	13·33	21·54	11·57	4·15	25·67	16·43	Sirajganj.			
...	0·61	...	...	0·09	...	1·25	...	0·04	6·19	12	15·90	19·61	14·23	6·19	25·40	19·63	Munshiganj ...	Dacca.	Dacca.	
...	1·21	..	...	0·45	...	...	...	0·90	4·28	16	15·39	18·53	12·08	4·28	27·38	17·09	Dacca			
...	0·88	...	...	0·24	...	...	...	.	4·80	14	15·39	20·04	12·76	4·80	.6·48	18·05	Narayanganj.			
...	0·68	..	...	0·38	...	...	...	0·30	3·62	16	13·32	16·41	10·80	3·50	29·23	15·65	Manikganj.			
...	1·10	...	...	...	...	...	...	...	4·60	13	15·47	21·10	12·46	4·60	31·13	18·97	Jaydebpur.			
1·44	0·70	...	...	0·68	1·41	...	0·40	2·21	3·65	19	16·37	21·32	18·34	5·15	32·47	25·14	Kishorganj ...	Mymensingh.		
...	1·17	...	...	...	...	...	...	1·04	2·60	11	12·70	12·80	12·63	2·60	21·64	17·33	Atia (*Tangail*).			
0·16	0·31	0·03	...	...	1·06	...	...	..	2·68	17	18·19	29 40	19·49	7·40	39 12	26·44	Mymensingh.			
...	...	...	...	...	0·49	...	...	...	2·75	13	14·68	10·01	15·40	2·75	20·12	20·37	Jamalpur.			
0·23	0·97	1·36	0·03	...	1·10	0·05	...	0·16	3·60	23	18·33	26·42	22·41	3·95	40 20	31·36	Netrakona.			
			Not recorded.								12·40		12·77			17·73	Suharnakhali.			
1·20	0·70	0·70	...	0·10	1·00	...	3·70	0·30	5·15	20	17·20	29·90	27·32	5·15	41·38	38·57	Durgapur.			
0·39	0·61	0·06	...	...	0·38	...	...	0·13	2·50	19	16·50	17·88	16·06	2·50	25·68	21·88	Sherpur Town.			
0·75	0·23	...	0·32	...	...	...	0·45	...	...	12	12·87	11·00	10·67	2·94	16·88	24·36	Diwangani.			
...	2·45	...	...	2·44	...	...	...	3·12	...	19	?	26·82	?	5·23	35·19	?	*Nalitabari.*			
0·02	0·46	...	0·30	...	...	...	...	...	1·93	14	15 67	12·10	12·52	2·14	24·22	16·57	Madaripur ...	Faridpur.		
0·03	0 07	...	...	0·91	0·81	3 04	...	0·69	4·02	19	14·28	21·01	12·75	4·02	28 25	17·51	Faridpur.			
0·16	0·22	...	...	1·80	0·12	...	...	0·90	3·16	17	13·83	16·64	11·83	3·54	21 88	16·44	Goalundo			
...	...	...	...	...	0·95	0·56	...	...	3·55	17	17·48	23·73	19·87	4·50	38·78	24·67	Patuakhali	Backergunge.		
...	0·55	...	0·05	0·28	...	0·12	...	...	2·80	15	16·5/	10·63	15·55	2·03	21 49	19·77	Pirojpur.			
...	0·40	0·07	...	...	0·93	...	...	0·30	5·55	18	16·52	20·91	16·27	5·55	40 47	26·74	Barisal			
0·05	0·45	...	...	0·02	0·01	...	0·03	0·01	2·15	14	14·80	14·57	13·28	3·21	24·35	17·56	Gaurnadi.			
...	0·30	...	...	...	4·19	1·04	..	...	1·80	18	17 96	28·25	18·41	4·19	36·09	22·80	Bhola			
...	...	...	...	...	2·02	0·14	..	...	1·95	15	18·56	30·80	23·53	6·18	35·21	29·11	Daulatkhan			
...	...	...	...	...	1·85	0·91	...	...	6·24	15	15·33	34·99	15·66	6·24	46·68	2·.23	Bauphal.			
...	0·70	...	...	0·48	...	...	..	0·20	4·20	15	14·78	23·39	14·71	4·20	28·31	20·55	Agartala ...	Hill Tippera	Chittagong.	East Bengal.
...	0·70	...	...	0·42	0·14	...	.	...	2·70	16	17·39	19·94	17·41	7·02	26·08	23·71	Comilla ...	Tippera.		
...	0·68	...	0·04	...	...	...	...	0·07	2·25	15	17·00	18·37	15·77	3·45	28·91	20·72	Chandpur			
...	1·04	...	...	...	0·70	...	...	...	6 31	15	15·53	20·98	14·85	6·31	29·75	20·01	Brahmanbaria.			
											13·07		11·76			18 42	Ramchandrapur.			
...	...	...	...	...	...	..	...	1·00	...	13	13·67	23·03	13·37	7·00	?	20·53	Nasirnagar.			
0·86	...	...	...	1·05	0·12	...	...	...	...	16	14·00	20·41	13·48	5·17	25·66	17·54	Daudkandi.			
...	...	...	...	...	0·30	...	...	...	3·61	13	15·47	15·28	14·93	3·61	23·05	21·17	Kasba.			
1·00	...	...	...	...	...	2·00	0·20	...	4·17	17	12·80	22·32	15·41	5·40	27·37	21·06	Laksam.			
...	0·28	...	0·27	...	2·35	2·85	..	..	3·62	18	16·39	25·08	23·29	3 62	30·49	29·18	Noakhali	Noakhali.		
...	0·67	...	...	...	0·03	...	0·11	0·54	4·70	16	17·58	26·88	24·30	6·10	31 82	30·46	Penny.			
0·60	...	...	...	...	...	2·20	0·28	3 20	5·00	21	17 33	32·57	24·38	5·00	38·50	31·27	Harishpur.			
...	1·10	...	0·13	..	0·30	...	...	...	4·95	17	16·33	24·41	16·31	4·60	30·32	22·33	Ramganj.			
...	0·50	...	...	...	0·31	..	0·18	0·11	3·80	19	?	23·43	?	3·80	29 13	- ?	*Chhagalnaya.*			
...	...	...	...	...	0·17	0·54	0·17	0·16	2·74	19	?	28 04	?	4·24	33·04	?	*Hatya.*			
...	0·62	0·52	..	...	...	0·55	...	...	2·85	15	?	26·30	?	7·50	32·89	?	*Lakhmipur.*			
0·30	0·58	...	...	...	0·22	0·13	0·08	4·09	1·50	20	18·83	31·94	31·99	5·83	40 12	34·43	Cox's Bazar	Chittagong.		
0·10	0·20	0·07	..	...	0·14	1·86	0·18	0·47	2·21	23	16·74	30·27	22·80	6·28	34·35	28·64	Chittagong			
0·24	...	...	...	...	...	0·39	0·12	1·72	1·83	18	16 53	23·46	21·67	5·47	27·77	31·43	Kutubdia.			
0·11	...	...	0·10	0·07	0·12	0·34	0·41	...	2·04	22	18·07	25·08	21·52	10·29	28·71	27·99	Satkania.			
0·76	0·04	...	...	3·40	0·16	0·02	0·15	1·01	1·20	23	17·61	27·94	18·04	6·10	34·20	25·72	Kodala.			
0·60	0·03	...	...	0·15	0·88	0·03	0·04	1·18	1·80	21	18·88	30·45	22·61	5·28	37·13	31·68	Fenca.			
0·40	0·75	...	...	...	...	0·22	0·41	0·62	4·00	22	17·63	26·09	23 36	6·03	33·64	31·04	Mirsarai.			
0·90	1·05	0·29	...	...	0·33	0·72	0·01	0·47	1·38	22	19·84	27·15	17·86	4·48	30·13	23·55	Rangamati ...	Chittagong Hill Tracts.		
0·17	1·39	0·48	...	...	0·54	0·24	0·05	0·49	1·32	23	18·90	29·54	21·91	9·85	38·42	30 61	Bandarban.			
0·33	...	...	...	...	...	1·10	...	...	2·00	18	?	24·16	?	4·05	27·85	?	*Barkal.*			

Table of Rainfall recorded at stations

Meteorological Division.	Division.	District.	Station.	1	2	3	4	5	6	7	8	9	10	11	12	13	14	15	16	17	18	19	20
BIHAR.	Patna.	Patna	Patna	...	...	...	0·81	...	0·44	...	...	...	0·08	0·12	0·52	...	...	...	...	...	0·08	...	...
			Dinapore	...	...	...	0·59	...	0·30	...	...	...	0·36	0·23	...	...	...	...	...	0·06	0·05	...	...
			Bihar	...	...	...	0·78	...	0·98	...	...	0·10	0·10	...	...	...	...	...	0·06	...	...	...	...
			Barh	...	...	...	1·10	...	...	1·15	...	...	...	0·58	0·05	0·70	...	0·06	...	...	...	...	...
			Bikram	...	...	...	0·95	...	...	0·05	0·50	...	0·06	...	1·32	...	...	...	...	0·03	...	...	...
			Hilsa	...	...	...	0·50	..	0·90	0·45	...	0·43	0·17	2·56	...	...	...	0·07	...	...	...	0·07	...
		Gaya	Aurangabad	...	...	...	...	..	..	..	..	1·31	...	1·40	...	...	...	...	...	...	...	...	...
			Gaya	...	...	...	0·07	...	0·89	..	0·11	...	...	0·71	0·13	...	...	...	0·21	...	...	...	...
			Nawada	...	...	...	1·06	...	0·72	0·02	..	..	0·13	0·37	1·73	...	...	...	...	...	...	...	...
			Jahanabad	...	...	...	0·64	...	0·07	..	1·51	...	0·08	...	0·88	...	...	...	...	0·16	0·03	...	...
			Arwal	...	...	...	0·30	...	0·13	...	0·40	0·03	0·11	0·13	...	...	...	...	...	0·06	...	...	...
			Daudnagar	...	...	...	0·02	...	0·17	...	0·86	0 13	0·65	0·16	...	...	...	...	...	...	...	...	...
			Sherghati	...	...	...	...	...	...	...	...	0·98	0·05	0·07	...	...	...	...	...	...	...	...	...
			Rajauli	...	...	...	0·23	...	...	...	0·98	...	0·51	0·90	...	...	...	...	...	...	...	...	...
			Pakri Sarawan	...	...	...	0·49	...	0·45	...	...	0·48	1·43	0·36	...	...	...	...	...	...	...	...	...
			Deo	...	...	...	...	...	...	...	...	1·50	...	1·50	...	...	...	...	...	...	...	...	...
		Shahabad	Buxar	...	...	...	0·30	...	0·16	...	...	...	...	0·02	...	...	...	...	...	0·06	...	...	...
			Dehri	...	...	...	...	...	...	...	...	2·10	2·32	1 47	...	...	...	0·05	...	...	...	...	...
			Bhabhua	...	...	...	...	...	...	...	...	1·58	...	0·57	...	...	...	0·09	...	...	...	...	...
			Nasaram	...	...	...	..	...	...	1·35	0·32	...	0·38	...	...	...	0·02	...	...	...	...	...	...
			Arrah	...	...	...	1·20	...	0·11	...	...	...	0·32	0·34	...	...	...	...	...	...	0·03	...	...
			Mohansa	...	...	...	...	..	...	...	...	...	...	...	...	...	...	...	...	...	...	...	...
			Khiri	...	...	...	0·52	...	1 35	...	...	0·34	...	...	...	...	...	...	...	...	...	...	...
			Agiaon	...	...	...	0·31	...	0·17	0·92	...	...	...	0·06	...	...	...	...	...	0·10	...	...	...
			Ramagar	...	...	...	...	0·31	...	0·25	...	0·16	...	0·70	...	...	...	...	...	0·10	0·05	...	...
			Koath	...	...	...	...	1·00	0·81	...	...	0·12	...	2·40	...	...	...	...	...	...	...	...	...
			Sikroul	...	...	...	0·94	...	0·40	...	...	...	...	1·95	...	...	...	...	...	0·07	...	...	...
			Bassowan	...	...	...	...	..	...	...	0·04	2·37	1·11	...	...	...	...	0·06	...	...	...	...	...
			Monaharpur	...	...	...	0·49	...	1·96	..	...	...	1·30	0·33	...	...	...	...	...	0·20	...	...	...
		Saran	Gopalganj	...	...	...	0·92	0·17	0·03	...	...	...	...	1·06	...	...	...	...	...	0·32	...	...	
			Siwan	...	...	...	1 01	...	0·2	0·02	...	0·04	...	0·05	...	...	...	0·00	...	...	...	...	...
			Ekma	...	...	...	1·00	...	0·75	...	...	...	...	1·11	1·40	...	...	...	...	...	...	...	...
			Chapra	...	...	...	1·55	...	0·25	...	...	...	0·80	0·45	...	...	...	0·02	...	...	...	...	...
			Hathwa	...	...	...	1·14	...	...	...	0·40	...	...	0·39	...	...	...	...	...	...	...	...	...
			Amnour	...	...	...	1·80	...	0·17	...	...	...	0·30	...	...	...	...	...	...	...	...	...	...
			Basantpur	...	...	...	0·78	...	0·38	...	...	...	...	0·31	...	...	...	...	...	...	...	...	...
			Daraulí	...	...	...	0·05	...	0·26	0·15	...	0·45	0 35	...	...	...	...	...	...	0·29	...	...	...
			Bhoreh	...	...	...	2·00	...	...	...	...	...	...	1·38	...	...	...	...	...	...	...	...	...
			Sripur	...																			
		Champaran	Motihari	...	0·07	...	1·20	0·27	0·85	0·28	0·25	0·14	...	...	0·33	0·79	...	0·54	...	0·55	...	...	...
			Bettiah	...	0·19	0·66	3·61	0·15	0·36	...	...	0·22	...	0·62	...	...	...	0·21	...	0·21	...	...	...
			Bagaha	...	...	0·15	2·19	0·02	0·58	...	0·59	...	...	...	...	...	...	...	...	0·56	...	...	...
			Narnurwa	...	...	...	1·60	0·32	1·37	...	..	...	...	2·00	...	0·07	...	...	...	0·65	...	...	...
			Ramnagar	...	...	...	2·50	0 50	1 07	...	0·50	...	...	0·80	0·59	...	...	...	0·50	1·40	...	...	...
		Muzaffarpur	Sitamarhi	...	...	...	0·26	...	...	6·92	...	0·31	...	...	1·54	0·60	...	0·44	0·79	2·09	...	...	...
			Muzaffarpur	...	...	...	0·90	0·02	...	0·30	...	...	0·09	0·01	0·08	0·38	...	0·20	...	0·14	...	...	...
			Hajipur	...	...	...	1·86	0·02	0·30	0·02	...	...	0·09	0·14	1·23	...	...	...	...	...	...	...	...
			Paru	...	...	...	0·80	...	0·15	...	...	...	0·14	1·11	...	...	...	...	...	0·24	...	...	...
			Mahua	...	...	...	1·50	0·05	...	1·95	...	...	...	...	...	...	...	...	...	0·31	...	...	...
			Shiuhar	...	...	...	0·23	...	...	0·57	...	0·30	...	0·41	0·32	0·17	...	0·50	2·38	...	...	...	...
			Pupri	...	...	...	0·55	...	3·35	...	...	...	...	...	2·95	...	...	0·75	0·55	2·15	...	...	...
		Darbhanga	Tajpur (Samastipur).	...	...	...	1·42	0·06	...	0·95	...	...	...	1·42	0·12	1·26	...	0·14	...	0·74	...	...	...
			Darbhanga	...	...	...	1·32	...	...	1·08	...	...	...	0·01	0·11	0·05	...	1·96	...	0·75	0·05	...	...
			Madhubani	...	...	...	0·13	...	...	2·73	...	...	...	0·12	0·17	0·08	0·08	0·39	0·67	0·96	0·16	...	...
			Bahera	...	...	...	1·40	...	...	...	...	...	...	...	...	1·43	...	...	1·84	0·82	...	...	...
			Rosera	...	...	...	1·20	...	...	1·07	...	...	...	0·42	...	0·18	...	...	...	0·85	...	...	...
	Bhagalpur.	Monghyr	Begusarai	...	...	...	0·84	0·03	...	0·43	...	...	...	0·84	0·11	0·06	...	...	...	0·61	...	...	...
			Monghyr	...	...	...	0·03	0·06	...	0·43	...	...	...	0·26	0·67	...	...	...	...	0·74	...	...	...
			Jamui	...	...	0·15	0·70	...	...	0·22	...	...	...	3·05	...	0·11	0·21	...	...	...	...	...	...
			Gogri	...	...	...	1·50	...	...	...	...	...	...	2·77	1·95	1·72	...	...	...	0·77	...	...	...
			Jamalpur	...	...	...	0·80	...	...	1·88	...	...	...	0·44	1·04	...	...	...	...	0·78	...	...	...
			Shaikhpura	...	...	...	0·15	...	0·32	...	...	0·15	0·33	1·43	...	...	...	...	...	...	...	...	...
			Chakai Bamda	0·35	0·01	...	1·12	...	...	...	...	...	0·30	3·35	0·43	...	0 04	0·02	...	...	...	...	...
			Chupreon	...	...	...	1·07	...	...	0·68	...	0·17	...	...	...	...	...	0·24	0·39	0·60	0·10	...	...
			Gidhour	0·43	...	...	1·80	...	...	0·12	0·05	...	...	5·78	1·49	...	...	0·38	...	...	...	...	...
			Khargpur	...	...	..	0·55	...	...	0·50	...	...	...	0·25	0·75	...	...	...	...	0·59	...	...	...
		Bhagalpur	Madhipura	...	...	..	0·95	...	...	0·70	...	...	...	...	0·50	...	...	2·50	0·75	...	...	...	...
			Bangaon (Sylabad).																	0·87			
			Supaul	...	...	...	0·28	...	...	0·40	...	0·02	...	...	2·06	0·87	...	...	...	...	...	...	...
			Pratapganj	...	...	...	0·02	...	...	0·20	...	...	..	0·39	...	0·22	...	1·69	2·32	0·83	0·40	...	...
			Bhagalpur	...	...	...	0·51	...	...	0·32	...	1·89	...	0 12	0·51	0 60	...	...	0·20	0·88	0·10	...	0·02
			Banka	...	1·00	...	0·16	...	...	0·24	...	0·20	...	...	0·40	...	...	...	0·20	0·73	...	...	...
			Colgong	...	...	...	0·72	...	...	0·55	0·38	...	...	0·45	0·58	0·80	...	...	..	...	0·05	...	...
			Bansil	...	1·25	...	0·80	0·25	...	...	...	...	...	...	0·34	1·66	...	...	0·60	1·75	...	...	...
		Purnea	Kishanganj	...	...	...	1·60	...	...	0·40	...	0·78	...	2·30	0·06	1·40	...	1·75	3·50	0·20	0·07	...	...
			Araria	...	...	...	...	0·48	...	0·40	...	...	...	1·15	...	0·14	...	1·28	3·62	...	0·04	...	...
			Purnea	...	...	...	0·95	...	...	0·01	...	...	...	0·21	1·31	...	0·06	0·10	2·92	2·37	0·23	...	...
			Gondwara (*Korah*).	...	...	...	0·35	...	...	...	...	...	0·10	1·30	...	...	...	1·80	1·16	0·30	...	...	...
			Barsoe	...	...	...	...	...	...	...	...	...	...	0·50	...	...	...	1·60	3·00	2·00	...	...	...
			Forbesganj	...	...	...	...	0·21	...	...	...	...	...	...	0·50	0·10	...	1·85	4·50	0·80	...	...	...
			Kaliagan	...	4·50	1·42	...	...	...	1·32	...	...	...	2·10	0·50	1 08	...	0·20	...	0·08	2·02	...	...
		Malda	Malda	...	1·25	...	...	0·61	...	...	...	...	...	0·23	0·08	1·00	0·78	...	1·85	0·76	0·01	...	...
			Chanchal	...	...	...	1·30	1·05	...	0·25	...	...	...	1·70	0·74	0·81	...	...	1·31	3·24	...	...	...
			Gajol	...	0·24	...	0·55	1·05	...	...	0·15	...	...	0·25	...	1·54	...	...	1·18	1·20	...	...	...
			Sibganj	...	0·72	0·01	...	0·50	...	0·06	0·48	0·36	...	0·83	0·08	0·80	...	...	1·57	0·27	0·32	...	...
		Santhal Parganas.	Rajmahal	...	1·05	...	...	0·35	...	...	1·47	...	...	...	0·11	0·24	4·25	1·75	2·38	0·47	...	0·20	...
			Godda	...	0·38	...	...	0·43	...	...	0·58	...	...	0·04	...	1·07	0·01	...	...	...	0·68	0·05	...	...
			Pakaur	...	0·87	...	...	0·05	...	...	0·04	0·94	...	...	0·37	0·58	1·08	0·29	...	0·41	0·21	...	...
			Naya Dumka	...	0·55	0·45	...	0·64	...	...	...	0·04	...	1·10	...	0·71	...	...	...	...	0·06	...	...
			Deoghur	..	0·15	0·20	0·95	...	...	...	...	...	...	0·10	0·05	1·97	...	...	...	0·04	...	...	...
			Jamtara	...	...	0·52	...	2·65	...	...	...	0·03	...	0·48	0·45	2·38	...	...	...	0·25	0·85	0·08	...
			Mohagama	...	0·10	...	...	...	...	0·42	...	...	...	...	0·37	1·20	0·08	...	...	...	...	...	...
			Nanihat	...	1·09	0·62	...	...	0·40	...	...	...	...	...	...	2·74	...	...	...	...	...	...	...

In Bengal in June 1902—*continued*.

21	22	23	24	25	26	27	28	29	30	Number of rainy days.	Average number of rainy days.	Total rainfall for the month.	Average rainfall for the month.	Heaviest rainfall during the month.	Total rainfall from 16th May up to 30th June 1902.	Average rainfall from 16th May up to 30th June.	Station.	District.	Division.	Meteorological Division.
...	...	...	...	...	...	...	...	...	...	4	7·61	2·05	7·76	0·81	3·09	8·97	Patna ...	Patna.	Patna—*concluded*.	BIHAR.
...	...	...	...	...	...	...	...	...	...	4	7·77	1·58	7 93	0·80	3·22	9·03	Dinapore.			
...	...	...	...	...	...	...	...	...	...	4	7·88	2·02	7·01	0·98	2·42	8·14	Bihar.			
...	...	...	...	...	...	...	...	...	...	4	7 55	3·64	6·17	1·15	4·24	7·30	Barh.			
...	...	...	...	...	...	...	...	...	...	3	6·93	2·91	8·79	1·82	3·48	10·11	Bikram.			
...	...	...	...	...	...	...	...	...	...	6	7·71	5·15	8·53	2·56	5·70	9 69	Hilsa.			
...	...	...	...	...	...	...	...	...	...	2	7·51	2·61	6·33	1·40	3·69	7·23	Aurangabad.	Gaya.		
...	...	...	...	...	...	...	...	...	...	5	8·32	1·92	6·78	0·71	2·41	7·65	Gaya.			
...	...	...	...	...	...	...	...	...	...	5	7·87	4·08	6·93	1·73	4·98	8·02	Nawada.			
...	...	...	...	...	...	...	...	...	...	4	6·89	3·37	6·33	1·51	3·54	7·10	Jahanabad.			
...	...	...	...	...	...	...	...	...	...	5	7·47	1·16	5·82	0·40	1·21	6·80	Arwal.			
...	...	...	...	...	...	...	...	...	...	5	7·07	1·99	6·33	0 86	2·43	6·95	Daudnagar.			
...	...	...	...	...	...	...	0·02	...	...	1	7·47	1·12	6·46	0·98	1·97	7·05	Sherghati.			
...	...	...	...	...	...	...	...	...	...	4	8·69	2·81	7·48	0·90	2·81	8·48	Rajauli.			
...	...	...	...	...	...	...	...	...	...	5	6 15	3·30	6 35	1·43	4·12	6·98	Pakri Barawan.			
...	...	...	...	...	...	...	...	...	...	2	?	3·00	?	1·50	3 55	?	*Deo.*			
...	...	...	...	...	...	...	...	...	...	2	8·06	0·84	5·44	0·30	0·59	5·94	Buxar ...	Shahabad.		
...	0·01	...	...	...	...	...	...	...	...	3	8·06	5·95	6 53	2·34	6·26	7·13	Dehri			
...	...	...	...	...	...	...	...	...	...	2	6·74	2·03	5·40	1·56	3·03	5·84	Bhabhua.			
...	...	...	...	...	...	0·02	...	...	...	3	7 71	2 09	5·02	1·35	2·25	6·17	Sasaram.			
...	...	...	...	...	...	...	...	...	...	4	7 90	2·00	6·95	1·20	2·95	8·00	Arrah.			
...	...	...	...	...	...	...	...	...	...	Nil	6·47	Nil	6·79	Nil	Nil	6 58	Mohanea.			
...	...	...	...	...	...	...	...	...	...	3	6·89	2·21	5·97	1·35	2·36	6·06	Khiri.			
...	...	...	...	...	...	...	...	...	...	4	7·11	1·56	9·16	0 92	1·60	9·54	Agaon.			
...	...	...	...	...	...	...	...	...	...	5	8·11	1·57	7·18	0·70	1·57	7·40	Rumazar.			
...	...	...	...	...	...	...	...	...	...	4	8·22	4·34	5·98	2 40	4·74	6·21	Koath.			
...	...	...	...	...	...	...	...	...	...	3	7·78	3·36	5·43	1·95	3 36	5·78	Sikroul.			
...	...	...	...	...	...	...	...	...	...	2	8·11	3·58	6 00	2·37	?	6·07	Bassowan.			
...	...	...	...	...	...	...	...	...	...	5	7·80	4·28	6·80	1·96	4·48	7·00	Monoharpur.			
...	...	...	...	...	...	...	...	...	...	4	8·38	2·50	6·80	1·06	3·10	8·09	Gopalganj ...	Saran.		
...	...	...	...	...	...	...	...	...	...	1	8·42	1·21	7·23	1·02	1·39	8·31	Siwan.			
...	...	...	...	...	...	...	...	...	...	4	8·00	3·16	9 09	1·90	3·37	9·41	Bkma.			
...	...	...	...	...	...	...	...	...	...	4	7·61	3·07	6·40	1·55	3 81	7·25	Chapra.			
...	...	...	...	...	...	...	...	...	...	3	?	1·93	?	1·14	3·65	?	*Hathwa.*			
...	...	...	...	...	...	...	...	...	...	3	6·00	1·97	9 28	1·50	2·22	10 03	Ammour.			
...	...	...	...	...	...	...	...	...	...	3	6·57	1·47	8·68	0·78	1·56	9·23	Basantpur.			
...	...	...	...	...	...	...	...	...	...	6	?	2·45	?	0·95	2·45	?	*Darauli.*			
...	...	...	...	...	...	...	...	...	...	2	?	3·36	?	2·00	4·76	?	*Bhorsh.*			
...	...	...	...	...	...	...	...	...	...		?		?			?	*Sripur.*			
...	...	...	...	...	...	...	...	...	...	10	9·39	5 07	8·90	1·20	6 81	10·77	Motihari ...	Champaran.		
...	...	...	...	...	...	...	...	...	...	8	8·93	5·63	8·79	3·61	6·98	10·10	Bettiah.			
...	...	...	...	...	...	...	...	...	0·02	6	10·40	4·35	11·40	2·19	4·57	13·30	Begaha.			
...	...	...	...	...	...	...	...	...	...	5	9·13	6·00	8·27	2·00	7·01	9·45	Burhurwa.			
...	...	...	...	...	...	...	...	...	...	8	?	7·87	?	2 50	8·87	?	*Ramnagar.*			
...	...	...	...	...	...	...	...	...	...	8	9·17	7·15	8·79	2·09	8·21	10·32	Sitamarhi ...	Muzaffarpur.		
...	...	...	...	...	...	...	...	...	...	5	8·06	2·12	7·25	0·90	2·80	8 45	Muzaffarpur.			
...	...	...	...	...	...	...	...	...	...	4	7·70	3·60	7·43	1 80	3·82	8·44	Hajipur.			
...	...	...	...	...	...	...	...	...	...	5	7·60	2·44	6·38	1·11	2·85	7·51	Paru.			
...	...	...	...	...	...	...	...	...	...	3	6·57	3·72	7·25	1·85	4·10	8·67	Mahua.			
...	...	...	...	...	...	...	...	...	...	8	7·81	4·83	7·21	2·33	6·11	8 63	Shiuhar.			
...	...	...	...	...	...	...	...	...	...	6	8·08	10·30	7·57	3·35	11·28	9·67	Pupri.			
...	...	...	...	...	...	...	...	...	...	7	8·23	6·11	7·43	1·42	6·53	8·53	Tajpur (Samastipur).	Darbhanga.		
...	...	...	...	...	...	...	...	...	...	5	8·43	5·03	7·80	1·96	6·95	9·01	Darbhanga.			
...	...	...	...	...	...	...	...	...	...	6	9·13	6·38	8 36	2·78	7·37	10·06	Madhubani.			
...	...	...	...	...	...	...	...	...	...	3	7·60	5 47	7 03	1·82	6 40	9 35	Bahera.			
...	...	...	...	...	...	...	...	...	...	5	7·33	3 72	6 28	1·20	4·89	7·51	Koserha.			
...	...	...	...	...	...	...	0·10	...	...	6	8·45	2·90	6·79	0·84	3 89	7·92	Begusarai ...	Monghyr ...		
...	...	...	...	...	...	...	...	...	...	5	8·39	3·00	7·01	0 93	3 30	8·37	Monghyr.			
...	...	...	...	...	...	...	...	...	...	6	8 87	4·44	7·34	3·05	4·81	8 50	Jamui.			
...	...	...	...	...	...	...	...	...	...	5	6·37	3 71	7·42	2·77	3·36	9·80	Gogri.			
...	...	...	...	...	...	...	...	...	...	5	9·33	4·88	9·02	1·85	5 08	9·77	Jamalpur.			
...	...	...	...	...	...	...	...	...	...	5	6 30	2·37	7·43	0·43	2·66	8·62	Sheikhpura.			
...	...	...	...	...	...	...	...	...	...	8	11·63	5·63	10·63	3·33	6·80	11 60	Chakai Bamda.			
...	...	...	...	...	...	0·01	...	...	...	7	7·65	3 83	5·85	1·67	5·14	7·48	Chupreon.			
...	...	...	...	...	...	...	...	...	...	6	8·50	9·55	7·10	5·78	10·35	8·12	Gidhour.			
...	...	...	...	...	...	...	...	0·13	...	6	9·07	2·67	7·63	0·75	4·17	8·31	Khargpur.			
...	...	...	...	...	...	...	...	...	...	5	9·82	5·40	6·31	2·50	6·14	10·74	Madhipura ...	Bhagalpur.		
											6·00		5·59			7·37	Banganga (Sylabad).			
...	...	...	...	...	...	...	...	...	...	7	9·21	7·18	8·70	2·38	8·58	10·70	Sapaul.			
...	...	...	...	...	...	...	...	...	0·17	8	9·78	5·80	10·85	2·20	7·48	14·06	Pratapganj.			
...	...	...	...	...	...	...	...	...	...	8	9 90	4·88	8·28	1·89	5·12	9·89	Bhagalpur.			
...	...	...	...	...	...	...	...	...	...	5	10·06	2·04	8·06	1·00	3·43	9 69	Banka.			
...	...	...	...	...	...	...	...	...	...	8	9·60	5·83	8·71	1·75	7·18	11·85	Colgong.			
...	...	...	...	...	...	0·10	...	...	...	8	10·83	4·75	8·18	1·66	?	9·39	Bansil.			
...	...	...	...	...	...	...	2·30	...	0·70	10	14·03	15·01	15·25	3·50	17·37	19·13	Kishenganj	Purnea.		
...	...	...	...	...	...	...	...	...	1·25	7	11·17	8·31	13·40	3·02	11·36	17·07	Araria.			
...	...	...	...	...	...	...	...	...	0 80	8	11·50	8·06	10·61	2·92	10 74	13 47	Purnea.			
...	...	...	...	...	...	...	...	...	...	6	9·37	5·01	9·31	1·80	5·80	12·77	Gondwara (*Korak*).			
...	...	...	...	...	...	...	...	...	1·20	5	12·35	6·30	11·74	3·10	10·70	14·13	Barsoe.			
...	...	...	...	...	...	...	...	...	2·05	7	11·80	10·01	11·66	4·50	13·85	16 16	Forbesganj.			
...	...	...	...	...	...	...	0·43	...	...	9	14·53	13·71	16·28	4·50	14·01	20 82	Kaliganj.			
...	...	...	...	...	...	...	...	...	1·12	9	12·16	8·65	9·89	1·85	11·89	12·29	Malda ...	Malda.		
...	...	...	...	...	...	...	...	...	1·60	9	11·54	12·09	11 69	3·24	13·66	14·61	Chanchal.			
...	...	...	...	...	...	...	...	...	2·20	9	11·73	8·49	9·65	2·20	9·50	12 41	Gajol.			
...	...	...	...	0·95	...	..	1·15	0·04	0·01	12	11·47	8·96	9·20	1·57	10·75	13·04	Sibganj.			
...	...	...	...	...	...	0·06	...	...	0·48	10	10·83	12·61	9·80	4·25	15 40	13·27	Rajmahal ...	Santhal Parganas.		
...	...	...	...	...	...	...	...	0·80	...		10·57		7 90	1 07		10·16	Godda.			
...	...	...	...	...	0·75	...	...	1·15	...	10	13·75	6·78	10·70	1·15	10·14	13·78	Pakaur.			
...	...	...	...	...	...	0 64	...	...	0·04	6	12 03	4·85	9·96	1·10	7·24	12·12	Naya Dumka.			
...	...	...	...	...	...	1·27	...	...	...	6	10·77	4·60	8·45	1·97	7·59	10·10	Deoghur.			
...	...	...	...	...	0·05	0·20	...	...	...	6	12·64	6·20	9·43	2·65	7 56	11 43	Jamtara			
...	...	...	...	...	3·00	...	...	...	...	7	?	6·35	?	3·00	?	?	*Mohagama.*			
...	...	...	...	...	...	1·20	...	...	...	5	8·47	5·06	7·00	2·74	6·96	8·50	Nanihat.			

Table of Rainfall recorded at stations

Meteorological Division.	Division.	District.	Station.	1	2	3	4	5	6	7	8	9	10	11	12	13	14	15	16	17	18	19	20
Bihar—*contd.*	Bhagalpur—*contd.*	Sonthal Parganas—*contd.*	Asseuboni	0·25	...	1·14	1·06	...	...	...	...	0·23	0·98	0·34	1·15	...	0·05	...	...	...	...	...	...
			Katikund ...	0 95	0·30	0·10	0 45	...	0·14	...	0·38	...	0·35	...	0·35	...	...	...	...	...	...	...	...
			Madhupur ...	...	0·50	...	1·50	...	...	...	...	...	...	0·97	1·30	1·93	...	...	...	0·22	...	...	...
			Sarwan ...	0·04	0·10	...	1·78	...	...	...	0·13	...	0·13	0·05	2·8)	0·07	0·11	...	...	...	...	...	...
			Sarath ...	...	0·39	...	2·07	...	...	...	...	...	0·34	.	0·73	.	...	...	...	...	...	...	...
			Barkope ...	0·75	...	...	1·50	...	...	1·25	1·41	0·85	0·25	1·32	0·48	0·75	0·29	...	...	0·85	0·72	...	...
			Bhagya ...															...	1·40	1 23	..	...	...
			Mohespore ...	0·53	0·03	...	0·18	...	...	...	...	...	0·90	...	0·35	1·30	...	...	0·23	0·17	0·03	...	0·06
			Hiranpur ...	...	...	...	0·20	0·03	...	...	...	...	0·05	0·32	1·0	...	...	0 50	0·31	0·22	...	...	...
			Harharwa ...	0·55	...	0·30	0·31	...	...	0·10	...	0·56	0·24	0·04	0·27	1·52	0·04	...	0·39	0·15	...	...	...
			Sahibganj ...	0·06	...	...	0·34	...	...	0·61	...	...	...	0·29	1·04	2·10	1·13	...	2·68	0·79	0·02	...	...
			Bario ...	...	...	...	0·54	...	...	0·11	...	...	...	0·35	0·22	...	...	0·73	0·33	...	...	...	...
Orissa	Orissa.	Cuttack ...	Jagatsingpur	...	...	...	...	...	...	1·11	...	...	0·12	...	0·26	0·32	...	...	0·46	...	...	...	...
			Banki ...	...	0·12	...	...	...	0·03	2·86	...	...	0·11	0·16	0·06	0·04	0 86	...	...	1·05	0·09	...	...
			Cuttack ...	...	...	...	...	...	..	1·03	...	..	1·18	0·68	0·09	...	0·97	...	...	0·45	0·10	...	...
			False Point ...	...	0·06	...	...	...	0·06	0·16	...	0 21	0·55	0·02	...	0·50	0·30	0·20	0· 6	0·15	...	0·32	0·02
			Kendrapara ..	...	0·05	...	...	...	0·02	1·93	...	...	0·45	...	0·73	0·03	1·52	0·05	0·02	0·59	0·08	...	...
			Jajpur ...	...	...	...	...	0·02	0·07	0·12	...	...	0·41	...	0·15	...	0·97	0·17	...	1·38	0·09	...	...
			Dharmsala ...	...	...	...	...	0·17	1·28	...	...	...	...	...	1 34	...	...	...	0·03	..	...	...	...
			Salepur ...	...	...	...	...	...	...	0·33	...	...	0·60	0·12	0 18	...	0·08	...	0·24	0·25	...	...	...
		Balasore ...	Akhyapada ...	...	...	...	...	...	0·04	0·40	...	...	0·25	...	0·15	...	1·23	0·18	0·03	0·39	...	...	...
			Chandbali ..	...	...	0·14	...	...	0·06		...	...	0·04	...	...	2·70	0·65	0·55	0·05	0·55	...	0·57	...
			Bhadrak ..	...	...	0·30	...	...	0·01	0·26	...	0·86	0·87	0·03	...	1·79	0·28	0·79	...	0·50	...	0·12	...
			Soro ..	...	0·32	0·34	...	...	..	0·05	...	...	0·14	0·16	...	2 19	0·13	0·73	0·03	0·75	...	...	...
			Balasore ...	...	0·25	0·22	...	...	...		...	...	...	...	...	...	1·20	0·32	0·18	0·42	...	...	...
			Jellasore ...	...	0·21	0 74	...	...	0·22	.	...	...	...	...	...	...	0·64	1·61	...	0·18	0·28	...	0·05
			Baripada ...	...	0·20	0·11	...	...	0·83	1·00	...	0·14	...	...	...	...	0·11	...	...	1·80	0·64	...	...
		Angul ...	Angul ...	...	...	...	...	...	...	0·35	...	0·22	...	1·41	..	0·08	0·02	..	0·45	0·02	...	...	0·68
			Bisipara ...	...	...	...	0·18	...	...	...	...	...	0·30	...	0·25	0·80	..	...	...	..	0·15	...	...
			Pal Lahara ...	...	...	...	...	...	...	...	...	...	...	...	0·42	...	0·68	...	0·21	0·16	...	...	...
			Talchar ...	...	...	...	...	0·68	...	0·27	...	...	0·31	0·99	...	...	0·02	...	0·27	0·26	...	...	1·52
			Dhenkanal ...	...	...	...	...	...	0·22	...	...	0·90	0·22	0·31	...	0·90	...	0·11	...	...	...	0·17	...
			Bassinga ...	...	...	...	...	0·90	...	0·10	...	...	2·65	0·47	0·64	...	0·10	...	...	0·47	0·02	...	...
			Baramba ...	...	...	...	...	...	...	0 85	...	...	..	0·30	...	0·08	0·30	...	...	0·34	...	...	...
			Narsingpur ...	...	0·45	...	...	...	...	..	...	...	0·05	0·04	0·10	0·75	...	...	0·55	...	...	...	...
			Chhindipada ...	...	...	...	...	0 10	...	0·26	...	...	...	1·50	0·12	..	0·23	...	0·64	...	...	...	...
			Tikerpara ...	...	...	...	...	...	...	...	...	0·06	...	0·76	0·35	0·95	...	...	...	...	...	...	...
			Kumarkhole																				
		Puri ...	Puri ..	...						0·58			0·04		0·19	0·34	1·26			1·00	0·03		
			Khurda ...	...	0·21	...	...	...	...	2·00	...	...	0·10	0·30	2 07	0 27	0·55	...	...	2·70	0·07	...	...
			Bhanpur ...	...	...	...	...	...	...	...	...	1·07	...	0·01	2·11	0·62	0·02	...	...	1·14	...	...	...
			Gop ...	...	...	...	...	...	...	1·50	...	...	...	...	0·30	0·13	0·40	...	...	0·87	...	...	...
			Satpara ...	...	...	...	...	...	...	...	...	0·07	0·21	0·23	0·35	0·36	0·03	...	...	1·70	0·27	...	...
			Pipli ..	...	...	...	...	...	...	2·10	...	...	0·03	0·02	0·43	0·45	0·45	...	...	1·24	0·18	...	...
			Nayagarh ...	...	...	...	...	...	...	...	...	2·95	...	0·62	1·64	0·09	0·25	...	...	0·45	...	...	...
			Raupur ...	...	...	...	...	...	...	...	0·28	...	0·65	0·10	0·20	0·80	...	...	0·72	...	...	...	...
			Konas ...	...	0·80	...	...	...	...	...	...	...	0·65	...	...	...	0·92	...	...	2·10	0·41	...	...
	Chota Nagpur.	Hazaribagh ...	Pachamba (*Giridih*).	0·01	0·27	...	0·73	...	0·40	...	0·10	...	0·25	0·02	0·10	...	0·40	...	...	...	...	...	...
			Hazaribagh ...	...	...	...	...	...	...	0·05	0·33	...	1·21	0·08	0·44	...	...	0· 7	0·06	0·05	...	...	...
			Barhi ...	...	...	...	0·26	...	...	...	0·47	0·65	1·02	0·85	1·52	...	...	0·16	...	...	...	...	...
			Chatra ..	...	...	...	...	...	...	...	0·11	...	0·09	0·19	...	...	...	...	0·03	0·12	...	...	...
			Kharundiha ...	0·25	...	...	0 30	...	...	0·80	0·50	0·50	...	...	...	...	...	...	...	...	...	...	...
			Ramgar ...	...	...	...	...	1·10	...	1·05	...	0·30	0·50	0·50	...	...	...	...	...	...	...	...	...
		Ranchi ...	Lohardaga ...	...	...	...	...	...	0·10	0·47	0·23	0·07	0·48	0·45	...	...	0·65	...	...	...	...	...	...
			ranchi ...	...	...	0·20	...	...	...	0·40	0·20	...	0·56	...	...	...	0·64	...	...	...	...	...	...
			Silli ...	...	...	...	...	...	...	...	...	...	...	...	1·90	...	...	...	...	...	...	...	...
			Palkot ...	...	...	...	...	...	...	...	...	0·45	0·57	0·15	...	...	...	...	...	...	...	...	...
			Bano ...	...	...	...	0·42	0·04	...	...	...	0·47	0·50	...	...	0·26	...	...	...	...	...	...	...
			Tamar ...	...	...	0 25	...	...	0·60	1·00	0·84	...	0·11	...	...	...	0·20	...	0·05	...	...	...	...
			Kurdeg ...	...	0·10	...	...	...	...	...	...	...	...	...	...	...	...	...	...	0·30	...	...	...
			Chainpur ...	...	...	...	...	...	...	...	...	...	...	...	...	...	...	...	...	...	...	...	...
			Sirguja ...																				
			Jashpur ...																				
			Gangpur ...	...	...	...	...	...	...	...	...	...	0·17	...	0·70	...	...	...	...	...	...	...	...
		Palamau ...	Palamau (*Daltongunj*).	...	...	...	...	...	...	...	...	0·02	0·07	...	...	...	0·13	...	...	...	...	...	...
			Balumath ...	...	...	...	...	...	...	...	...	...	...	0·65	...	...	...	...	...	...	...	...	...
			Husainabad ...	...	...	...	...	...	...	...	...	...	...	...	...	...	...	...	...	...	...	...	...
			Garuwa ...	...	...	...	...	...	...	...	...	...	0·09	0·14	...	...	0·58	...	...	...	...	...	...
			Mahuadaur ...	...	...	...	...	...	...	0·28	...	0·21	0·98	0·22	...	...	0·14	...	...	...	...	...	...
			Panki ...	...	...	...	...	...	0·70	...	...	...	...	...	...	...	...	...	...	...	...	...	...
			Latehar ...	...	...	...	...	...	...	...	...	0·40	1·20	0·50	...	...	0·40	0·20	...	0·05	...	...	...
			Nagerutari ...	...	...	...	...	...	...	...	0·21	...	0·24	...	...	...	0·37	...	...	...	...	...	...
			Ranka ...	...	...	...	...	...	0·10	...	...	0·18	0·07	...	...	...	1·55	...	...	...	...	...	...
			Chattarpur ...	...	...	...	...	...	...	...	...	0·39	...	1·16	...	...	...	...	...	...	...	...	...
		Manbhum ...	Purulia ...	...	0·31	...	0·24	...	0·20	...	0·75	...	1·95	...	0·17	...	...	0·02	0·04	...	...	...	...
			Gobindpur ...	...	0·51	...	0·62	...	...	0·25	...	...	0·48	...	0·19	...	...	...	...	...	...	...	...
			Raghunathpur	...	0·26	...	0·48	...	1·20	..	...	...	1·10	...	1·60	...	...	...	...	...	...	...	...
			Barabhum ...	...	0·60	...	...	...	...	...	0·56	0·24	...	...	0·56	...	...	...	...	...	...	...	...
			Jhalda ...	...	0·13	...	...	...	...	...	1·45	0·04	1·08	0·38	...	...	...	0·12	...	...	...	...	...
			Chas ...	...	0·04	...	...	...	0·45	0·37	0·65	...	1·19	...	0·40	...	...	0·65	0·02	0·20	...	...	...
			Pandra ...	...	0 20	...	0·65	...	...	...	...	...	0·06	0·12	0·68	...	...	...	...	0·05	...	...	...
		Singhbhum ...	Chaibasa ...	...	...	0·54	...	...	0·50	0·30	...	...	0·02	0·19	0·30	...	0·46	0·23	...	0·24	...	...	0·28
			Chakradharpur	...	...	1·61	...	1·23	0·94	...	...	0·20	0·30	...	...	0·51	...	0·02	...	...	...	...	0·31
			Ghatsila ..	...	1·10	0·21	...	...	0·10	0·20	...	...	0·10	...	0·22	...	0·12	...	0·16	...	...	...	...
			Baharagura ...	...	0·53	0·15	...	...	0·26	0·35	0·53	0·04	0·22	...	...	...	0·34	0·61	0·12	...	...	...	...
			Gailkura ...																				
			Kalikapur ...	0·10	0·36	...	...	...	...	1·16	...	0·58	...	...	...	...	0·49	0·62	...	0·40	...	...	...
			Monoharpur ...	...	...	...	...	...	0·25	...	...	0·10	0·36	2·12	...	0·10	...	...	...	...	...	...	...
			Katbari ...	...	...	0·19	...	...	0 45	...	...	0·16	...	0·20	...	...	0·53	0·45	...	0·35	...	...	...
			Seraikilla ...	...	...	0·97	...	...	...	0·06	...	0·78	...	0·05	1·33	...	0·75	0 21	...	0·99	...	...	...
			Kharswan ...	0·23	...	...	...	...	0·15	0·19	...	...	0·30	0·34	10·25	...	0·53	0·03	...	0·78	...	...	0·29
		Orissa Tributary Mahals.	Keonjhar ...	0·13	...	...	0·15	...	0·50	...	...	0·27	0·39	0·47	...	0·87	0·08	...	0·61	...	...	...	...
			Anandpur ...	...	0· 4	...	...	...	0·04	1·54	...	...	0·08	0·04	0·90	...	...	0·70	...	0·72	...	...	1·73
			Kunjabongarh	...	0·05	0·07	...	...	...	...	...	...	0·30	0·06	0·05	0·18	0·12	...	...	0·13	0·16	0·02	...

in Bengal in June 1902—*concluded.*

21	22	23	24	25	26	27	28	29	30	Number of rainy days.	Average number of rainy days.	Total rainfall for the month.	Average rainfall for the month.	Heaviest rainfall during the month.	Total rainfall from 16th May up to 30th June 1902.	Average rainfall from 16th May up to 30th June.	Station.	District.	Division.	Meteorological Division.
...	...	...	...	...	0·06	...	...	...	...	7	12·00	5·25	9·06	1·15	7·49	10·25	Asenboni.	Santhal Parganas—*concld.*	Bhagalpur—*concld.*	Bihar—*concld.*
...	...	...	...	...	0·25	0·05	...	...	...	9	11·00	3·32	12·25	0·95	6·08	13·13	Katikund.			
...	...	...	...	...	...	0·70	...	...	...	7	11·86	7·12	10·23	1·93	10·06	11·66	Madhupur.			
...	...	...	...	...	...	0·35	..	0·03	...	7	13·57	5·59	11·30	2·80	8·95	11·89	Sarwan.			
...	...	...	...	...	...	3·40	...	...	...		13·00		9·67	2·40		10·35	Sarath.			
...	...	...	...	...	...	...	...	...	...	12	9·33	9·67	9·93	1·52	12·47	10·75	Barkope.			
...	...	...	...	...	0·57	...	...	...	...		8·45		9·24			10·28	Bhasya.			
...	...	...	...	...	0·58	...	0·70	0·03	...		11·00		10 35	1·30		11·82	Mohespur.			
...	...	...	...	...	0·55	...	0·45	...	...	8	?	3·78	?	1·06	6·91	?	*Hiranpur.*			
...	...	...	...	...	0·75	...	...	1·53	...	12	12·29	6 66	9·83	1·52	9·80	11·61	Barharwa.			
...	...	...	...	...	...	...	...	...	0·44	9	11·29	9·50	11·33	2·08	10·41	12·58	Sahibganj.			
...	...	...	...	0·37	...	...	...	...	...	7	?	2·55	?	0·73	5·74	?	*Barlo.*			
...	0·21	...	...	...	...	...	...	...	0·61	7	8·57	3·09	7·75	1·11	3·40	9·99	Jagatsingpur	Cuttack.	Orissa.	
...	...	0·49	...	0·04	...	...	...	1·31	0·02	8	10·94	7·24	9·65	2·86	8·64	11·49	Banki.			
...	0·24	1·40	...	...	2·01	...	...	...	...	9	11 26	8 15	10·91	2·01	8·61	13·73	Cuttack.			
...	...	0·14	...	...	...	...	...	...	...	9	9·27	2·95	9·27	0·55	3·55	12·41	False Point.			
...	...	..	...	...	...	...	...	...	...	5	9·60	5·67	9·47	1·93	6·70	12·49	Kendrapara.			
...	...	0·09	...	...	...	...	...	...	1·42	7	11·07	4 86	9·91	1·42	6·55	13 37	Jajpur.			
...	...	0·33	...	0·07	...	..	...	...	...	7	10·67	6·19	10·11	1·67	6·77	14·15	Dharmsala.			
...	...	0 96	...	...	...	...	...	0·40	1 67	8	11·00	3·60	10·60	0·98	4·30	13·74	Salepur.			
...	...	0·19	...	...	...	...	...	0·20	0·33	9	11·88	3·32	9·38	1·23	3·69	12·83	Akhyapada ...	Balasore.		
...	...	0·74	..	0·33	...	...	...	...	0·23	9	9·67	0·61	8 33	2·70	9·23	11·39	Chandbali.			
...	0·27	...	0·48	...	0·06	...	...	...	0·65	12	11·20	7·27	9·58	1·79	7·93	13·15	Bhadrak.			
...	...	0·88	0·60	0·06	0·09	...	...	...	...	10	9 90	6·26	8·30	2·19	0·21	11·73	Soro.			
...	...	...	...	...	...	...	...	...	...	6	11·00	2·59	10·37	1·20	5 92	13·56	Balasore.			
...	...	...	0·21	...	0·24	...	...	...	...	9	9·93	4 35	8·71	1·61	6·50	11·35	Jellasore.			
...	0·08	0·23	0·36	...	...	...	...	...	3·34	11	12·59	6·89	10·95	3·34	9·80	13·43	Baripada			
...	...	0·16	0·12	...	...	0·05	...	0·28	...	8	10·70	3·83	9·07	1·41	4·23	11·45	Ansul ...	Angul.		
...	...	0·24	...	...	0·08	..	0·18	...	0·11	8	10·65	2·29	9·88	0·80	2·79	11·01	Bisipara.			
...	...	0·41	...	...	..	2·64	...	...	...	6	11·44	4·52	12·05	2·64	5·65	12·93	Pal Lahara.			
...	...	0·07	...	...	1·21	...	...	...	..	8	11·40	5·40	9·59	1·32	6·28	11·21	Talchar.			
...	1·43	...	...	1·86	...	...	...	1·34	1·18	11	12·15	7·83	10·48	1·86	10·03	13·46	Dhenkanal.			
...	...	0·49	...	0·08	2·18	...	...	...	...	8	?	7·50	?	2·65	9·73	?	*Basinga.*			
...	...	0·61	...	...	0·58	...	1·61	...	...	7	10·60	4·70	9·62	1·61	6·28	11·39	Baramba			
...	0·89	...	...	0·77	...	...	0·02	0·02	0·05	7	11·36	4·49	9·14	0·92	6·37	10 28	Narsingpur			
...	0·03	...	...	...	0·11	...	0·47	...	...	9	?	3·93	?	1·50	4·31	?	*Chhendipadah.*			
...	...	...	...	...	0·46	...	0·39	...	...	8	?	2·97	?	0·95	4·47	?	*Tikerpara.*			
											?		?			?	*Kumarkhole.*			
...	...	0·62	...	...	...	..	...	...	...	6	8·11	4·06	7·09	1·26	4·17	9·98	Puri ...	Puri.		
...	...	0·47	...	...	...	...	...	...	...	9	10 67	8·74	9·38	2·70	9·70	11·46	Khurda.			
...	...	0·34	...	...	...	...	...	0·01	0·01	5	9·41	5·33	8·24	2·11	5·08	9·24	Bhanpur.			
...	...	0·67	...	...	...	...	...	...	...	6	9·33	3 87	7·09	1·50	5·44	10·16	Gop.			
...	...	1·20	...	...	...	...	...	...	...	7	8·18	4·42	8·41	1·70	4·73	10·87	Satpara.			
...	...	0·39	..	...	0·12	...	...	...	...	8	9·60	5·31	8 21	2·10	6·53	10·62	Pipli.			
...	...	0·10	...	...	...	...	...	...	0·25	7	10·00	6·35	9·68	2·95	7·99	10·83	Nayagarh.			
...	...	0·40	...	...	...	...	...	...	0·20	8	10·63	3·35	10·08	0·80	4·14	10·94	Ranpur.			
...	...	0·30	...	...	...	...	...	...	...	6	?	5·18	?	2·10	5·28	?	*Kanas.*			
...	...	...	...	...	...	0·20	2·11	...	...	9	11·63	4·59	8·79	2·11	5·82	10·33	Pachamba (*Giridih*).	Hazaribagh.	Chota Nagpur.	
...	...	...	...	...	...	0·09	...	...	...	3	11·19	2·38	8·78	1·21	4·48	10·07	Hazaribagh.			
...	...	...	...	...	...	...	...	...	...	6	9·00	4·33	7·02	1·52	4·41	8·18	Barhi.			
...	...	...	...	...	...	0·59	...	...	...	4	9·13	1·13	8 81	0·59	1·65	9·91	Chatra.			
...	...	...	...	...	...	0·65	...	...	...	6	10 07	2·70	8·96	0·65	3·00	10·35	Kharaadiha.			
...	...	...	...	...	..	0·30	...	...	...	6	8·07	3·75	8·19	1·10	4·05	9 31	Ramgar.			
...	0·10	0·13	...	...	...	0·49	...	...	...	9	10·92	3·17	8·52	0·65	3·52	9·59	Lohardaga	Ranchi.		
...	...	0·08	0·18	0·18	...	...	...	...	...	7	12·47	2·44	6·16	0·64	2·70	9·77	Ranchi.			
...	...	...	0·10	...	...	...	...	...	...	2	8·79	2·00	8·87	1·90	2·35	10·38	Silli.			
...	...	0·43	...	...	...	...	...	...	...	4	11·57	1·60	11·63	0 47	1 75	12·35	Palkot.			
0·12	0·10	0·30	0·48	0·40	1·00	...	...	...	0·08	10	?	4·42	?	1·00	5·34	?	*Bano.*			
...	0·02	0·03	...	...	...	0·39	...	...	...	8	13·14	3·74	12·75	1·00	4·32	13·63	Tamar.			
											?		?			?	*Kurdeg.*			
...	...	...	...	0·10	0·17	0·15	0·10	...	0·08	8	10·71	1·70	7·93	0·50	2·46	8·18	Chainpur.			
											9·32		10·10			10·62	Sirguja.			
											11·79		11·36			12·34	Jashpur.			
...	...	...	...	0·03	0·03	...	...	...	0·46	3	10·37	1·39	9·86	0·70	1·96	10·78	Gangpur.			
...	0·01	...	...	...	...	0·10	0·16	...	...	3	8·48	0·49	6·10	0·16	0·49	6·91	Palamau (*Daltonganj*)	Palamau.		
...	...	...	...	...	...	...	...	...	...	1	9·27	0·65	8·56	0·65	1·40	9·39	Balumath.			
...	...	...	...	...	...	...	...	...	...	Nil	7·00	Nil	6·52	Nil	0·48	7·16	Husainabad.			
...	...	...	...	...	...	...	...	...	...	2	6·93	0·76	6·03	0·53	0·76	6·78	Garhwa.			
...	...	...	...	...	...	...	...	...	...	5	?	1·83	?	0·98	2·27	?	*Mahuadaur*			
...	...	...	...	...	...	...	...	...	...		?		?	0·70		?	*Panki.*			
...	...	...	...	...	0·19	0·02	...	...	...	6	?	2·96	?	1·20	3·00	?	*Latehar.*			
...	...	...	...	...	...	..	0·03	...	...	3	?	0·85	?	0·37	1·13	?	*Nagarutori.*			
...	...	...	...	...	...	0·65	0·20	...	...	5	?	2·75	?	1·55	2·75	?	*Ranka.*			
...	0·70	...	...	...	...	...	0·45	...	...	4	?	2·70	?	1·16	3·82	?	*Chattarpur.*			
...	0·04	...	...	...	...	0·16	...	0·28	0·18	9	13·39	4·34	10·07	1·95	5·44	13·05	Purulia ...	Manbhum.		
...	...	...	...	0·04	...	0·45	...	...	...	6	10·71	2·58	9·40	0·62	3·40	10·92	Gobindpur.			
...	...	...	...	...	...	2·04	...	...	...	6	9·80	6·08	7·47	2·04	6·01	9·40	Raghunathpur.			
...	...	...	...	...	...	...	0·24	...	..	7	11·00	2·97	10·94	0·65	4 17	13·88	Barabhabhum.			
...	0·10	...	...	...	...	...	...	0·26	0·24	9	11·89	4·55	10·21	1·48	4·68	11·89	Jhalda.			
...	...	...	...	...	...	0·18	...	...	...	6	9·87	5·33	8·06	1·19	3·89	9·99	Chas.			
...	...	...	...	...	...	1·57	...	...	...	5	2·00	4·28	11·00	1·57	5·45	12·53	Pandra.			
...	...	0·01	0·26	...	...	0·02	0·41	...	...	11	11·29	3·86	8·41	0·54	5·73	10·65	Chaibasa			
...											11·64		8·98			10·97	Chakradharpur.	Singbhbum.		
...	...	...	0 84	...	...	...	...	...	...	9	11·27	3·75	10·62	1·10	4·71	13·16	Ghatsila.			
...	...	...	0·39	...	...	...	...	...	...	10	10·80	3·44	10·28	0·61	4·13	13·19	Saheragura.			
											11·38		8·85			10·56	Gaikura.			
...	...	...	...	...	...	...	...	...	...	7	16·25	4·75	15·48	2·16	7·91	18·14	Kalikapur.			
0·09	...	...	...	...	...	1·15	...	...	...	7	11·39	4·27	11·35	2·12	4·43	13·03	Monoharpur.			
...	...	0 66	0·55	...	...	2·09	...	...	...	10	?	5 62	?	2·09	6·51	?	*Katbari.*			
...	...	0·27	0·03	...	...	0·58	0·06	...	...	8	?	5·93	?	1·23	7·08	?	*Seraikilla.*			
...	...	...	0·30	0·03	...	0 92	...	...	...	12	?	4·99	?	0 92	5·64	?	*Kharsowan.*			
...	0·44	...	...	...	...	...	...	...	1·46	11	10·67	7·19	6·78	1·73	7·82	7·99	Keonjhar ...	Orissa Tributary Mahals.		
...	0·60	0·57	0·16	...	...	...	...	...	...	8	12·75	6·29	10·29	1·54	6·92	12·52	Anandpur.			
...	0·06	0·30	0·93	...	...	...	...	0·03	0·90	8	9·74	3·35	8·39	0·93	4·78	10·43	Kunjabongarh.			

SUMMARY OF THE METEOROLOGICAL AND RAINFALL OBSERVATIONS TAKEN IN BENGAL, AND OF THE METEOROLOGICAL OBSERVATIONS TAKEN IN ASSAM, FOR THE MONTH OF JUNE 1902.

WEATHER was unusual in several important respects during the greater part of June. Pressure was almost continuously low in the north, and especially in the north east, so that, as there was a somewhat steeper pressure gradient than usual, the southerly moist winds were diverted towards Assam and the eastern parts of the Province. Rainfall was in consequence very heavy at eastern stations while conditions were favourable for rainfall, and that was at the end of the second and beginning of the third week. For about a week at that time heavy falls were of almost general occurrence in Assam and the adjacent parts of East and North Bengal.

Showery weather was fairly general in the early part of the month, even in the western districts; but being due to local disturbances, resulting from the light variable winds then prevalent, the rainfall was generally light. After the commencement of monsoon conditions in the east, which occurred about the 11th, rainfall almost entirely ceased in the west of the Province, and hot season conditions with high temperature prevailed.

For the month as a whole, Chota Nagpur received 33 per cent, Orissa, Bihar and South-West Bengal about 60 per cent., North Bengal 108 per cent., and East Bengal 131 per cent. of the normal. In Assam, Silchar, Dhubri and Tezpur received excess rainfall by amounts varying from 2·5 to 5·6 inches, while at Dibrugarh and Sibsagar there was defect, 1 inch at the former and 5·4 inches at the latter.

The large temperature variations which accompanied the irregular distribution of the monsoon rainfall have affected the average temperature considerably, and most so in the western districts, where little or no rain fell during the latter half. Mean excess in Chota Nagpur is 3°·6, in Orissa and Bihar more than 1°. In Bengal Proper mean temperature was almost normal, and in Assam there was defect of about 1°. Very high day temperatures were recorded, the highest in Chota Nagpur and Bihar being 111°, in Orissa 110° and in South-West Bengal 106°.

As already stated, showery weather was more frequent than usual in the early part of June, in which respect there has been a noticeable peculiarity throughout the past hot season. With the commencement of monsoon conditions a marked change took place, rainfall ceased in the west of the Province, and heavy rainfall became general in the east. This change was due to the only cyclonic disturbance which occurred over the Bay during the month.

The first sign of disturbance was on the 6th, when a diffused depression was shown over the north and centre of the Bay, and the pressure gradient in the south became steeper, with stronger south-westerly winds in that area. A fairly regular cyclonic circulation of light winds prevailed over the Province and the Bay. After a general rise of pressure during the subsequent 24 hours the depression had almost disappeared. The only trace of its existence was in the relatively low pressure in Burma. Pressure again fell on the 9th and continued to fall slowly or moderately until the 13th, when there was a slight depression over the Bay and a steep pressure gradient over the south and centre of the Bay. This shallow depression, without intensifying, moved north-eastward towards Assam, and with its advance heavy rainfall became general at eastern stations.

As the steep pressure gradient followed the depression northwards, wind force increased in the north of the Bay, and the highest velocities which accompanied the disturbance were felt in the extreme north-west angle. On the 13th the average velocity at Diamond Island was 20; on that and subsequent days the highest velocity reported from the Orissa coast was 24; while at Saugor Island from the 15th to the 17th strongish winds, averaging about 30 miles an hour, continued.

The disturbance which probably continued between the 7th, when it first appeared, and the 13th, when it was close to the north of the Bay, differed from the typical storms of the early monsoon season in two respects. It failed to develop into a cyclonic storm of any severity, and it moved north-eastward instead of in the usual north-westerly direction. After the low pressure area moved towards Assam, the pressure gradient was much steeper than usual in that direction for some days. On the 14th the difference from normal pressure varied from excess of ·05 inch in the south of the Bay to defect of ·2 inch in part of Assam; and though this rather large difference slowly diminished on subsequent days, it was not till nearly the end of the third week that the pressure distribution had become approximately normal. There was then a small to moderate excess over the greater part of the Province and the Bay.

Throughout that period from the 13th to about the 20th there was a strong indraught from the Bay towards East Bengal and Assam, and it was during those days that a considerable part of the rainfall of the month fell. The days of heaviest rainfall in East Bengal were the 14th to 17th and in North Bengal the 18th to 20th. The area of lowest pressure moved slowly westward, and at times rainfall became more general in the western districts; the only day on which there was any marked westerly extension was on the 17th, when

fairly general falls occurred in Orissa and North Bihar. In Chota Nagpur and South Bihar only a few light scattered showers fell.

The pressure gradient continued favourable for rainfall between the 21st and 24th, but the falls became daily less general. On the 25th a rapid rise of pressure began in the north-east and extended south-westward. The rapid change was accompanied by a few local showers, but monsoon rainfall ceased over almost the whole Province. The pressure distribution was more uniform than usual over both the Province and the Bay, and during the last week temperature rose, not only in the western districts, but also in North Bengal and Assam, until an important series of changes commenced in the north-east at the close of the month. These changes are difficult to account for. A fall of pressure began in North Bengal, and as it advanced south-westward heavy rainfall occurred first in North Bengal, then over almost the whole of Bengal Proper; and as the disturbed conditions advanced local storms with rainfall and a rapid fall of temperature became general in the western districts. On the last day of June most of the stations in East and North Bengal reported between 2 and 4 inches. The pressure changes on that date were such as would indicate the movement of a shallow depression from north-east to south-west, a rare occurrence in the monsoon season, and the temperature variation from the normal ranged from defect of 6° in Assam to excess of 12° in the west of Bihar and Chota Nagpur. In the early days of July this high temperature in the western districts disappeared, and whatever the causes of these large changes may have been or from whatever direction they may have originated, weather more characteristic of the monsoon season succeeded them over the whole Province.

Pressure, though not subject to large changes during June, underwent considerable variations and was at times unusual for the season. In the early part of the month there was a rather large excess over the Province, and a more uniform distribution than usual over the Bay. As the slight depression developed over the Bay, this excess inland disappeared, and with the north-easterly movement of that disturbance a rather large defect became established in the eastern and more especially the north-eastern districts. The defect and the accompanying steep gradient over the Bay continued during the third week, and gradually disappeared between the 22nd and 24th. The most noticeable changes during the month occurred between the 25th and the 30th—first the rapid rise, then the passage of a shallow depression from north-east to south-west accompanied by the remarkable changes already noticed.

On an average for the month the difference from the normal varied from excess of ·01 inch, general in Orissa, Chota Nagpur and South-West Bengal, to defect of ·01 inch in North Bengal and Assam.

Temperature.—During the early part of the month, while local storms were of fairly frequent occurrence over the greater part of the Province, temperature was low generally, and at times several degrees below the normal. After pressure fell in the east and dry westerly winds became general in the western districts, ordinary hot season conditions were restored with high temperatures, especially in the latter part of the month. A marked contrast obtained between the eastern and western districts during the second and third weeks. In the former, where there was dense cloud and heavy rainfall, temperature was exceptionally low, while in the west hot season conditions continued with day temperatures of about 110°.

The variation from the normal on an average for the month was small in the eastern districts, but in the west, notwithstanding the low temperature in the first week, there was a considerable to large excess.

Rainfall.—During the early part of the month scattered showers fell in all parts of the Province. After the shallow depression entered East Bengal on the 14th, heavy rain fell in the eastern districts, and the showers which had up to that date been fairly frequent in Bihar almost ceased. In Chota Nagpur and Orissa light showers were of occasional occurrence throughout the month.

As the monsoon current was diverted eastward, the rainfall for the month was much heavier in East and North Bengal than in the central or western districts. East Bengal received on an average 23 and North Bengal 19 inches, the former amount being more than 5 inches in excess of the normal. In South-West Bengal, Bihar and Orissa the fall was little more than half the usual amount, and in Chota Nagpur the fall was less than one-third the normal.

At individual stations the difference from the normal varies from defect of 5 inches in Chota Nagpur to excess of 10 inches in parts of East Bengal. The area of excessive rainfall includes the districts of Rajshahi, Jalpaiguri, Bogra and Pabna, in North Bengal, and all the districts in East Bengal. In all other parts of the Province, including Bihar, South-West Bengal, Orissa, and the western parts of East and North Bengal, defect was 2 to 4 inches.

The following table gives the rainfall of the various Divisions of Bengal in June and in each of the previous months of the present year as compared with the normal values

for the same periods. The figures given represent the actual falls expressed as percentages of the normal falls :—

Meteorological Divisions.	January.	February.	March.	April.	May.	June.	Actual rainfall of first six months of 1902 expressed as a percentage of the normal fall for the period.
South-West Bengal	Nil	2	166	250	136	57	98
North Bengal ...	11	2	261	154	112	108	116
East Bengal ...	Nil	1	85	308	127	131	143
Bihar ...	13	4	263	177	99	60	73
Orissa ...	104	1	97	218	82	58	76
Chota Nagpur ...	31	41	82	116	116	33	54

The following table gives full data for the comparison of the actual and normal rainfall of the month of June in all districts in the Province:—

Percentage Table for June 1902.

Division.	District.	Normal district rainfall for June.	Actual district rainfall for June 1902.	Percentage of actual to normal rainfall.	Percentage, excess (+), defect (—).
South-West Bengal	Burdwan	10·15	6·99	69	— 31
	Birbhum	11·30	4·50	40	— 60
	Bankura	10·83	3·92	36	— 64
	Midnapore	10·25	3·99	39	— 61
	Hooghly	10·36	7·49	72	— 28
	Howrah	10·93	4·92	45	— 55
	24-Parganas	10·89	6 91	63	— 37
	Calcutta	11·04	5·47	50	— 50
	Nadia	9·99	7·93	79	— 21
	Murshidabad	10·14	5·92	58	— 42
	Jessore	11·69	8·62	74	— 26
	Khulna	12·74	9·70	76	— 24
North Bengal ...	Rajshahi	10·51	15·26	145	+ 45
	Dinajpur	13·78	12·52	91	— 9
	Jalpaiguri	26·66	28·93	109	+ 9
	Darjeeling	22·59	21 76	96	— 4
	Cooch Behar	27·44	26·11	96	— 4
	Rangpur	17·06	15·70	92	— 8
	Bogra	12·83	16·55	129	+ 29
	Pabna	11·49	20·04	174	+ 74
East Bengal ...	Dacca	12·61	19·66	156	+ 56
	Mymensingh	17·90	19·89	111	+ 11
	Faridpur	12·37	16·58	134	+ 34
	Backergunge	17·37	25·41	146	+ 46
	Tippera	14·58	20·67	141	+ 41
	Noakhali	22·20	27·24	123	+ 23
	Chittagong	23·56	27·75	118	+ 18
	Chittagong Hill Tracts ...	19·89	28·35	143	+ 43
Bihar ...	Patna	7·71	2·89	37	— 63
	Gaya	6·52	2·15	33	— 62
	Shahabad	6·41	2·58	40	— 60
	Saran	7·91	2 56	32	— 68
	Champaran	9·34	5·24	56	— 44
	Muzaffarpur	7·41	4·89	66	— 34
	Darbhanga	7·47	5·46	74	— 26
	Monghyr	7·62	4·85	64	— 36
	Bhagalpur	8·34	5·11	61	— 39
	Purnea	12·60	9·90	79	— 21
	Malda	10·11	9·53	94	— 6
	Sonthal Parganas	9 79	6·30	64	— 36
Orissa ...	Cuttack	9·71	5·20	54	— 46
	Balasore	9·37	5·62	60	— 40
	Puri	8·63	5·18	60	— 40
Chota Nagpur ...	Hazaribagh	8·43	3·15	37	— 63
	Ranchi	9·64	2·44	25	— 75
	Palamau	6·80	0·48	7	— 93
	Manbhum	9·59	4·10	43	— 57
	Singhbhum	10·57	4·27	40	— 60

The following table gives the summary of the temperature and rainfall data of each of the seven meteorological divisions of the Province for the month of June 1902:—

Meteorological Divisions.	Temperature						Rainfall—							
	Highest observed during month.	Lowest observed during month.	Averages for month			Average mean of month above or below normal mean of month	Of month.			Rainy days			Since 16th May 1902.	
			Of highest of each day.	Of lowest of each day.	Of mean for each day.		Average.	Normal average.	Variation.	Average number in month.	Normal average number in month	Variation.	Average.	Normal average.
South-West Bengal	106·1	69·4	94·1	79·0	86·6	+0·4	6·11	10·80	—4·69	9·79	12·39	—2·60	9·67	13·91
North Bengal	98·1	70·6	88·8	76·6	82·8	—0·3	19·19	17·77	+1·42	14·39	14·73	—0·34	24·61	23·94
East Bengal	94·3	70·1	88·2	77·1	82·7	0	22·95	17·56	+5·39	17·22	16·12	+1·10	30·39	23·61
Bihar	111·4	68·8	97·4	80·0	88·7	+1·6	4·98	8·34	—3·36	5·77	9·12	—3·35	6·08	9·79
Orissa	110·5	70·6	93·2	79·8	86·5	+1·1	5·32	9·23	—3·91	8·00	10·19	—2·19	6·55	11·83
Chot Nagpur*	111·1	70·0	100·1	80·1	90·1	+3·6	3·08	9·22	—6·14	6·52	10·64	—4·12	3·86	10·69
Assam	97·6	60·0	80·3	75·0	80·7	—1·2								

* Purulia not included.

Meteorological Office, Bengal,
The 15th July 1902

C. Little,
Meteorological Reporter to the Govt. of Bengal.

No. II—Annual Statement.

GOVERNMENT OF BENGAL—IRRIGATION DEPARTMENT.

Irrigation operations for the year 1901-1902.

Statement in acres of crops irrigated in Canal districts.

Nature of crops.	Cuttack.	Balasore.	Midnapore.	Burdwan.	Hooghly.	Gaya.	Patna.	Shahabad.	Saran.	Total.
1	2	3	4	5	6	7	8	9	10	11
Garden and orchards ...	27	4	...	121	18	7	...	25	The canals were closed during the year, except for a short time during the *rabi* season.	202
Sugarcane	46	1,128	...	34	17	4,387	2,862	38,309		46,783
Cereals—										
Wheat ...	...	...	...	...	...	214	453	38,545		39,212
Barley	...	...	...	...	...	427	946	13,607		14,970
[illegible]	166,230	33,503	79,823	20,674	8,719	41,581	35,928	238,476		624,334
Miscellaneous ...	...	...	...	...	...	2,567	214	38,356		41,137
Pulse—										
Gram, &c. ...	6	...	...	...	...	981	1,456	24,835		27,278
Miscellaneous ...	...	...	...	...	...	1,151	593	24,195		25,944
Fodder crops—										
Grass, lucerne ...	...	...	...	...	...	...	...	216		216
Fibres—										
Cotton	20	27	...	...	...	...	...	2		49
Dyes—										
Indigo	...	...	...	...	...	...	...	...		...
Turmeric, &c. ...	1	...	...	...	...	...	2	...		3
Drugs—										
Opium	...	...	...	...	...	144	637	959		1,740
Tobacco, &c. ...	...	...	...	...	...	...	...	1		1
Oilseeds—										
Mustard, &c. ...	...	...	...	...	...	19	74	456		549
Castor ...	...	...	...	...	...	...	...	...		...
Miscellaneous ...	...	...	...	...	...	4	2,152	12,943		15,099
Hot-weather ...	32	111	...	...	...	1,590	2,820	25,775		30,328
Total, 1901-1902* ...	166,362	34,773	79,823	20,829	8,754	53,072	47,532	456,700		867,845
Total, 1900-1901† ...	170,787	32,753	(*b*)79,252	19,358	8,509	52,115	38,151	342,147		743,072
Average of the five years ending with 1900-1901.	166,152	29,821	72,062	18,872	8,322	49,207	44,930	369,044	(*a*) 1,126	759,536

* Approximate figures. † Actual figures.

(*a*) In arriving at this figure 4,500 acres irrigated free during the kharif season of 1900-1901 have not been taken into account.

(*b*) This figure has subsequently been arrived at. It exceeds the area shown in the Revenue Report for 1900-1901 by 12 acres.

Calcutta,
The 15th July 1902.

D. B. Horn,
Offg. Secy. to the Govt. of Bengal.

No. II.—Rabi Statement.

GOVERNMENT OF BENGAL—IRRIGATION DEPARTMENT.

Irrigation operations of fasl rabi, 1901-1902.

Statement in acres of crops irrigated in Canal districts.

Nature of crops.	Cuttack.	Balasore.	Midnapore.	Burdwan.	Hooghly.	Gaya.	Patna.	Shahabad.	Saran.	Total.
1	2	3	4	5	6	7	8	9	10	11
Garden and orchards ...	25	4	...	*121	*18	7	...	25	The Saran Canals were opened for *rabi* irrigation and an area of about 2,918 acres was irrigated free from the canals. The area irrigated was arrived at merely from enquiry from the cultivators.	200
Sugarcane	4	564	...	34	17	3,400	1,224	25,481		30,724
Cereals—										
Wheat	...	...	...	...	...	214	453	38,545		39,212
Barley	...	...	...	..	...	427	936	13,607		14,970
Rice	†2,212	...	266	...	‡27	...	...	...		2,505
Miscellaneous ...	...	...	...	...	...	2,567	214	37,531		40,312
Pulse—										
Gram, &c.	6	...	...	...	...	981	1,456	24,835		27,278
Miscellaneous ...	...	...	...	...	...	1,151	598	24,185		25,934
Fodder crops—										
Grass, lucerne ...	...	...	...	...	...	...	...	216		216
Fibres—										
Cotton	20	27	...	...	...	...	...	2		49
Dyes—										
Indigo	...	...	...	...	...	...	...	...		...
Turmeric, &c. ...	1	...	...	...	...	...	2	...		3
Drugs—										
Opium	...	...	...	...	...	144	637	959		1,740
Tobacco, &c. ...	...	...	...	...	...	...	...	1		1
Oilseeds—										
Mustard, &c. ...	..	..	...	...	..	19	74	456		549
Castor	...	...	...	...	...	...	...	...		...
Miscellaneous ...	...	...	...	...	...	4	2,152	12,943		15,099
Hot-weather ...	5	40	..	..	...	...	...	...		45
Total *rabi*, 1901-1902§ ...	2,273	635	266	155	62	8,914	7,746	178,786		198,837
Total *rabi*, 1900-1901‖ ...	3,975	1,431	(a) 01	82	52	5,946	3,759	81,279		97,455
Average of the five years ending with 1900-1901.	6,002	837	1,489	545	419	8,038	6,502	114,076	816	138,724

* Potato irrigated from the Eden Canal. | † Dalwa rice. | ‡ Boro rice. | § Approximate figures. | ‖ Actual figures.
(a) This figure has subsequently been arrived at. It exceeds the area shown in the Revenue Report for 1900-1901 by 12 acres.

Calcutta,
The 15th July 1902.

D. B. Horn,
Offg. Secy. to the Govt. of Bengal.

GOVERNMENT OF BENGAL, IRRIGATION DEPARTMENT.

Approximate return of traffic on the Circular and Eastern Canals for the week ending Saturday, the 12th July 1902, as compared with the corresponding week of the previous year.

Nature of Cargo.	Week ending Saturday, the 12th July 1902.			Week ending Saturday, the 13th July 1901.		
	Number of boats.	Weight of cargo.	Tollage.	Number of boats.	Weight of cargo.	Tollage.
		Mds.	Rs.		Mds.	Rs.
Rice and paddy	367	40,750	508	175	29,175	316
Jute	38	22,100*	246	4	1,075†	19
Firewood	32	19,175	286	41	31,875	467
Other articles	635	1,64,920	1,919	417	1,33,925	1,517
Total ...	1,072	2,46,945	2,959	637	1,96,050	2,319

* Weight by canal measurement, 21,275 maunds.
† Ditto ditto, 1,212½ ,,

Results of the Meteorological Observations taken at the Alipore Observatory from 6th to 12th July 1902.

Month.	Date.	Maximum in sun.	Number of hours of bright sunshine.	Mean pressure barometer at 32° Fahr.	Temperature.				Hygrometry.				Wind.		Rain.	Weather.
					Mean.	Maximum.	Range.	Minimum.	Mean wet bulb.	Vapour tension.	Dew point.	Humidity.	Prevailing direction.	Miles recorded.		
1902.		°		Inches.	°	°	°	°	°	Inch.		%			Inches.	
July	6th	133·9	0·3	29·709	82·4	84·8	5·0	79·8	80·4	1·013	79·6	91	E and SE ...	123	0·97	Chiefly cloudy, o, d, p.
,,	7th	150·8	3·4	·661	83·0	88·6	10·6	78·0	80·4	1·002	79·3	89	SE and SSE ...	103	0·61	Chiefly cloudy, o, p, t.
,,	8th	148·9	4·3	·610	84·5	89·8	11·5	78·3	81·1	1·019	79·8	86	SSE and S ..	118	0·18	Chiefly cloudy, d, p.
,,	9th	145·6	2·0	·578	84·4	89·1	9·5	79·6	81·5	1·041	80·5	88	SSE and S ...	141	0·34	Chiefly cloudy, o, d, p.
,,	10th	141·4	1·3	·558	84·5	89·1	12·0	77·1	81·8	1·054	80·9	89	SSE, SSW and S	157	0·03	Chiefly cloudy, o, d.
,,	11th	121·9	Nil	·497	83·9	88·7	6·7	82·0	81·6	1·053	80·8	90	SSW, S and SW	155	0·01	Cloudy, o, d, t.
,,	12th	147·7	5·4	·458	84·8	93·4	17·2	76·2	79·6	0·942	77·4	79	S, WSW and SE	93	0·50	Chiefly cloudy, o p, t. ⊿.

The mean pressure of the seven days	Inches.	29·582
The average pressure of the corresponding period for 24 years, Surveyor-General's Office		29·551
	Hours.	
The total number of hours of bright sunshine		17·2
The maximum possible number of hours of sunshine		93·9
	°	
The mean temperature of the seven days		83·9
The average temperature of the corresponding period for 24 years, Surveyor-General's Office		84·0
The extreme variation of temperature		17·2
The maximum temperature		93·4
	Miles.	
The highest velocity of the wind in one hour		12
	%	
The mean relative humidity		87
The average relative humidity of the corresponding period for 24 years, Surveyor-General's Office		85
	Inches.	
The total fall of rain from 6th to 12th July 1902		2·59
The average fall of the corresponding period for 24 years, Surveyor-General's Office		2·17
The total fall from 1st January to 12th July 1902		28·92
The average fall of the corresponding period for 24 years, Surveyor-General's Office		26·22

The mean pressure, temperature, etc., are deduced from the traces of the Barograph and Thermograph, and from eye observations.

The maximum and minimum temperatures are obtained from self-registering thermometers. All the thermometers are verified and the readings have been corrected to a standard constructed and verified at the Kew Observatory. They are exposed under a thatched shed open at the sides, and are suspended four feet above the ground.

The barometer readings are corrected approximately to those of the standard, Newman's No. 86, formerly at the Surveyor-General's Office.

The hygrometric elements are obtained from Tables III, IV, and V of the official tables computed in the Meteorological Office, and based on Regnault's modifications of August's formula.

The directions and the movement of the wind are taken from the trace of a Beckley's anemograph.

The mouth of the rain-gauge is one foot above the ground.

o, overcast; d, drizzling rain; p, passing temporary showers; t, thunder; ⊿, lightning.

N.B.—In the weekly abstract from 15th to 21st June 1902, read 82 for 2 as humidity of the 21st June 1902.

METEOROLOGICAL OFFICE, GOVT. OF INDIA,
Alipore (Calcutta), the 14th July 1902.

G. W. KÜCHLER,
for *Meteorological Reporter to the Govt. of India and Director-General of Indian Observatories.*

Weekly Return of Traffic Receipts on Indian Railways.

EASTERN BENGAL STATE RAILWAY.

(INCLUDING N. B., K.-D., DACCA AND ASSAM-BEHAR SECTIONS.)

Approximate Return of Traffic and Mileage for last 9 days of June 1902 on 854 miles open.

	Coaching Traffic.		Merchandise and Mineral Traffic.		Other earnings (including ferry).	Total earnings.	Traffic Train-miles run.		
	Number of passengers.	Coaching receipts.	Weight carried.	Receipts.			Coaching.	Merchandise.	Total.
		Rs. A. P.	Mds. s.	Rs. A. P.	Rs. A. P.	Rs. A. P.			
Total traffic for 9 days	338,690	1,47,120 0 0	11,11,470 0	1,62,830 0 0	47,090 0 0	3,56,540 0 0	48,359	41,311	89,670
Or per mile of railway ...	397	172 0 0	1,301 0	190 0 0	38 0 0*	400 0 0*	...	...	...
For previous 25 weeks of half-year†	5,812,370	28,20,310 0 0	2,76,82,334 0	40,29,007 0 0	4,89,337 0 0	73,38,714 0 0	929,061	1,032,898	1,961,079
Total for 26 weeks ...	6,151,060	29,67,430 0 0	2,87,93,804 0	41,91,307 0 0	5,36,427 0 0	76,95,254 0 0	977,440	1,074,209	2,051,649
COMPARISON.									
Total for corresponding 8 days of previous year	263,968	1,28,475 0 0	18,41,021 0	2,06,144 0 0	—1,75,931 0 0	1,58,688 0 0	42,235	32,378	74,613
Per mile of railway corresponding week of previous year	309	150 0 0	2,158 0	242 0 0	—234 0 0	158 0 0	...	...	...
Total to corresponding date of previous year	6,147,519	29,02,794 0 0	2,47,06,998 0	35,95,331 0 0	5,90,817 0 0	71,49,002 0 0	941,840	964,162	1,906,002

* Excluding ferry earnings.
† Audited up to week ending 3rd May 1902.

BRAHMAPUTRA-SULTANPUR RAILWAY.

Approximate Return of Traffic and Mileage for last 9 days of June 1902 on 59·19 miles open.

	Coaching Traffic.		Merchandise and Mineral Traffic.		Other earnings (including ferry).	Total earnings.	Traffic Train-miles run.		
	No. of passengers.	Coaching receipts.	Weight carried.	Receipts.			Coaching.	Merchandise.	Total.
		Rs. A. P.	Mds. s.	Rs. A. P.	Rs. A. P.	Rs. A. P.			
Total traffic for 9 days	9,620	3,700 0 0	11,810 0	1,000 0 0	40 0 0	4,740 0 0	1,377	1,511	2,888
Or per mile of railway	163	62 0 0	200 0	17 0 0	1 0 0	80 0 0	...	...	...
For previous 25 weeks of half-year*	176,797	59,454 0 0	5,26,756 0	36,855 0 0	833 0 0	97,142 0 0	25,624	22,393	48,017
Total for 26 weeks ..	186,417	63,154 0 0	5,38,566 0	37,855 0 0	873 0 0	1,01,882 0 0	27,001	23,904	50,905
COMPARISON.									
Total for corresponding 8 days of previous year	6,179	2,023 0 0	38,742 0	1,845 0 0	24 0 0	3,892 0 0	1,230	1,445	2,675
Per mile of railway corresponding week of previous year ...	105	35 0 0	657 0	31 0 0	...	66 0 0	...	...	...
Total to corresponding date of previous year	159,790	46,095 0 0	5,06,890 0	38,898 0 0	565 0 0	85,258 0 0	23,546	27,760	51,306

* Audited up to week ending 3rd May 1902.

MYMENSINGH-JAGANNATHGANJ RAILWAY.

Approximate Return of Traffic and Mileage for last 9 days of June 1902 on 53·37 miles open.

	Coaching Traffic.		Merchandise and Mineral Traffic.		Other earnings (including ferry).	Total earnings.	Traffic Train-miles run.		
	Number of passengers.	Coaching receipts.	Weight carried.	Receipts.			Coaching.	Merchandise.	Total.
		Rs. A. P.	Mds. s.	Rs. A. P.	Rs. A. P.	Rs. A. P.			
Total traffic for 9 days ...	10,220	3,930 0 0	9,330 0	500 0 0	20 0 0	4,450 0 0	1,063	1,498	2,561
Or per mile of railway ..	191	74 0 0	175 0	9 0 0	.....	83 0 0	..	...	...
For previous 25 weeks of half-year*	225,800	64,203 0 0	489,182 0	23,584 0 0	429 0 0	88,215 0 0	22,840	23,589	46,429
Total for 26 weeks ...	216,020	68,133 0 0	497,512 0	24,084 0 0	448 0 0	92,665 0 0	23,903	25,087	48,990
COMPARISON.									
Total for corresponding 8 days of previous year	8,311	3,164 0 0	32,280 0	686 0 0	1 0 0	3,851 0 0	1,391	906	2,297
Per mile of railway corresponding week of previous year ...	156	59 0 0	605 0	13 0 0	...	72 0 0	...	...	...
Total to corresponding date of previous year	238,957	64,057 0 0	336,082 0	14,303 0 0	436 0 0	78,886 0 0	31,394	14,880	46,274

* Audited up to week ending 3rd May 1902.

DACCA STATE RAILWAY.

Approximate Returns of Traffic and Mileage for last 9 days of June 1902 on 86 miles open.

	Coaching Traffic.		Merchandise and Mineral Traffic.		Other earnings.	Total earnings.	Traffic Train-miles run.		
	Number of passengers.	Coaching receipts.	Weight carried.	Receipts.			Coaching.	Merchandise.	Total.
		Rs. A. P.	Mds. S.	Rs. A. P.	Rs. A. P.	Rs A P			
Total traffic for 9 days	36,300	11,280 0 0	41,670 0	2,810 0 0	630 0 0	14,740 0 0	3,796	1,710	5 506
Per mile of railway	422	131 0 0	485 0	33 0 0	7 0 0	171 0 0	...	..	..
For previous 25 weeks of half-year*	672,540	1,98,230 0 0	13,04,027 0	1,12,'57 0 0	7,144 0 0	3,17,431 0 0	69,187	51,331	120,518
Total for 26 weeks ...	708,840	2,09,510 0 0	13,45,697 0	1,14,877 0 0	7,774 0 0	3,32,161 0 0	72,983	53,041	126,024
Comparison.									
Total for corresponding 8 days of previous year	27,511	8,667 0 0	2,93,336 0	4,019 0 0	4,351 0 0	17,037 0 0	2,249	3,446	5,695
Per mile of railway corresponding week of previous year ...	320	101 0 0	3,411 0	47 0 0	51 0 0	199 0 0	...	..	..
Total to corresponding date of previous year	634,315	2,00,169 0 0	13,41,672 0	1,05,901 0 0	13,365 0 0	3,27,535 0 0	71,941	54,777	126 718

* Audited up to week ending 3rd May 1902.

COOCH BEHAR STATE RAILWAY.

Approximate Return of Traffic and Mileage for last 9 days of June 1902 on 33·78 miles open.

	Coaching Traffic.		Merchandise and Mineral Traffic.		Other earnings (including ferry).	Total earnings.	Traffic Train-miles run.		
	Number of passengers.	Coaching receipts.	Weight carried.	Receipts.			Coaching.	Merchandise.	Total.
		Rs. A. P.	Mds. S.	Rs. A. P.	Rs A. P.	Rs. A. P.			
Total traffic for 9 days	3,560	1,530 0 0	10,930 0	1,440 0 0	30 0 0	2,99) 0 0	341	2,863*	3,177*
Per mile of railway	105	45 0 0	384 0	43 0 0	1 0 0	89 0 0	.....	.....	.....
For previous 25 weeks of half-year†	71,410	27,233 0 0	3,29,366 0	22,418 0 0	1,243 0 0	50,893 0 0	8,315	40,461	48,776
Total for 26 weeks ...	74,970	28,763 0 0	3,40,296 0	23,858 0 0	1,282 0 0	53,883 0 0	8,629	43,324	51,953
Comparison.									
Total for corresponding 8 days of previous year	2,404	1,339 0 0	25,84,254 0	25 971 0 0	195 0 0	27,505 0 0	318	258	576
Per mile of railway corresponding week of previous year	73	40 0 0	76,503 0	769 0 0	.....	809 0 0	.....	.....	.....
Total to corresponding date of previous year	54,751	21,262 0 0	28,67,135 0	51,208 0 0	4,636 0 0	77,096 0 0	5,956	27,155	33,111

* Including ballast train-miles 2,365.
† Audited up to week ending 3rd May 1902.

BENGAL AND NORTH-WESTERN RAILWAY.

Approximate Return of Traffic for last 9 days of June 1902 on 1,262 miles open.

	Coaching Traffic.		Merchandise and Mineral Traffic.		Other earnings (estimated), including steam-boat.	Total earnings.	Traffic Train-miles run.		
	No. of passengers.	Receipts.	Weight carried.	Receipts.			Coaching.	Merchandise.	Total.
		Rs.	Md	Rs	Rs	Rs			
Total traffic for the period on 1,262 miles open	254,760	(a)1,09,510	7,80,310	(b) 1,07,340	(c)18,980	(a)2,35,830	51,856	(d)41,855	93,711
Per mile of railway ...	201·87	86·77	618·07	85·06	15·04	186·87	.....	.....	.....
For previous 24½ weeks of half-year(e)	4,729,493	20,66,730	2,12,51,228	29,43,505	5,44,310	55,54,545	1,005,691	911,825	1,917,426
Total for the half-year ...	4,984,253	21,76,240	2,20,37,538	30,50 915	5,63,290	57,90,375	1,057,457	953,680	2,011,137
Comparison.									
Total for corresponding period (8 days) of previous year on 1,251 miles open	243,800	88,396	11,45,445	1,06,026	34,444	2,28 866	36,359	(f)35,907	72,266
Per mile of railway corresponding period of previous year ...	194·88	70·66	915 56	84·76	27·53	182·95	.....	.....	.....
Total to corresponding date of previous year	4,834,095	19,26,513	2,13,05,476	29,24,044	5,40,311	53,90,868	803,934	900,672	1,703,606

(a) Increase due to increased mileage and improved traffic generally.
(b) The weight and amount of ballast trains included in this week were Mds. 50,464 and Rs. 2,572, against Mds. 433,547 and Rs. 17,808 in the corresponding week of the previous year.
(c) Decrease due to Rs. 12,117 on account of hire of locomotives and vehicles adjusted in the corresponding week of the previous year.
(d) Includes 5,470 miles of ballast trains run on open line.
(e) ,, audited figures up to week ending 10th May 1902.
(f) ,, 2,786 miles of ballast trains run on open line.

SEGOWLIE-RAKSAUL BRANCH RAILWAY.

(WORKED BY THE B. & N.-W. RAILWAY.)

Approximate Return of Traffic for last 9 days of June 1902 on 18 miles open.

	Coaching Traffic.		Merchandise and Mineral Traffic.		Other earnings (estimated).	Total earnings.	Traffic Train-miles run.		
	Passengers carried.	Receipts.	Weight carried.	Receipts.			Coaching.	Merchandise.	Total.
	No.	Rs.	Mds.	Rs.	Rs.	Rs.			
Total traffic for the period on 18 miles open	1,997	313	19,163	417	10	739	441	207	648
Or per mile of railway	110·39	17·33	1,065·67	23·17	0·55	41·05	.....	.....	.....
For previous 24½ weeks of half-year*	59,211	10,072	3,07,213	8,590	868	19,530	9,131	3,289	12,420
Total for the half-year ...	61,198	10,384	3,26,396	9,007	878	20,269	9,572	3,496	13,068
COMPARISON.									
Total for corresponding period (8 days) of previous year on 18 miles open.	2,417	430	14,625	276	—3	703	470	106	576
Per mile of railway corresponding period of previous year.	134·28	23·92	812·50	15·33	—0·17	39·07	.....	.....	.....
Total to corresponding date of previous year.	53,189	8,894	3,63,597	10,154	770	19,818	9,398	3,175	12,573.

* Includes audited figures up to week ending 10th May 1902.

SEGOWLIE-RAKSAUL BRANCH RAILWAY.

(WORKED BY THE B. & N.-W. RAILWAY.)

Audited Return of Traffic for week ending 17th May 1902 on 18 miles open.

	Coaching Traffic.		Merchandise and Mineral Traffic.		Other earnings.	Total earnings.	Traffic Train-miles run.		
	Passengers carried.	Receipts.	Weight carried.	Receipts.			Coaching.	Merchandise.	Total.
	No.	Rs. A. P.	Mds.	Rs. A. P.	Rs. A. P.	Rs. A. P.			
Total traffic for the week on 18 miles open	2,221	342 12 0	13,965	348 1 6	18 2 0	708 15 6	366	138	504
Or per mile of railway	123·39	19 0 8	720·28	19 5 6	1 0 1	39 6 2	.....	.....	.....
For previous 18½ weeks of half-year	49,468	8,591 5 0	2,16,437	5,953 3 7	789 10 0	15,334 2 7	7,015	2,381	9,396
Total for 19½ weeks ...	51,689	8,934 1 0	2,29,402	6,301 5 1	807 12 9	16,043 2 1	7,381	2,519	9,900
COMPARISON.									
Total for corresponding week of previous year on 18 miles open	1,969	306 2 8	13,383	462 12 5	90 13 0	859 12 1	406	98	504
Per mile of railway corresponding week of previous year ...	109·39	17 0 2	743·50	25 11 4	5 0 9	47 12 3	.....	.....	.....
Total to corresponding date of previous year	40,393	6,796 5 8	2,46,640	7,356 13 5	716 10 0	14,869 13 1	7,201	2,276	9,477

SEGOWLIE-RAKSAUL BRANCH RAILWAY.

(WORKED BY THE B. & N.-W. RAILWAY.)

Audited Return of Traffic for week ending 24th May 1902 on 18 miles open.

	Coaching Traffic.		Merchandise and Mineral Traffic.		Other earnings.	Total earnings.	Traffic Train-miles run.		
	Passengers carried.	Receipts.	Weight carried.	Receipts.			Coaching.	Merchandise.	Total.
	No.	Rs. A. P.	Mds.	Rs. A. P.	Rs. A. P.	Rs. A. P.			
Total traffic for the week on 18 miles open	2,389	357 15 0	17,842	324 10 6	7 14 0	690 7 6	369	165	534
Or per mile of railway	132·72	19 14 2	991·22	18 0 7	0 7 0	38 5 9	.....	.....	.....
For previous 19½ weeks of half-year	51,689	8,934 1 0	2,29,402	6,301 5 1	807 12 0	16,043 2 1	7,381	2,519	9,900
Total for 20½ weeks ...	54,078	9,292 0 0	2,47,244	6,625 15 7	815 10 0	16,733 9 7	7,750	2,654	10,404
COMPARISON.									
Total for corresponding week of previous year on 18 miles open	1,991	301 13 11	18,874	450 0 0	17 13 0	769 10 11	354	150	504
Per mile of railway corresponding week of previous year	110·61	16 12 4	1,048·56	25 0 0	0 15 10	42 12 2	.....	.....	.....
Total to corresponding date of previous year	42,384	7,098 3 7	2,65,514	7,506 13 5	734 7 0	15,639 8 0	7,555	2,426	9,981

BENGAL CENTRAL RAILWAY COMPANY, LIMITED.

Approximate Return of Traffic and Mileage for the last 9 days of June 1902 on 139 miles open.

	Coaching Traffic.		Merchandise and Mineral Traffic.		Other earnings.	Total earnings.	Traffic train-miles run.		
	Number of passengers.	Coaching receipts.	Weight carried.	Receipts.			Coaching.	Merchandise.	Total.
		Rs. A. P.	Mds. s.	Rs. A. P.	Rs. A. P.	Rs. A. P.			
Total traffic for last 9 days of June	44,195	21,241 0 0	46,932 0	4,076 0 0	10,998 0 0	36,315 0 0	4,534	3,941	8,475
Per mile of railway per week	264	127 0 0†	263 0	23 0 0	61 0 0	211 0 0	.....	.....	.....
For previous 25 weeks of half-year*	909,618	3,65,929 0 0	14,97,718 0	1,16,606 0 0	90,556 0 0	5,73,091 0 0	85,966	61,738	147,716
Total for 26 weeks ...	953,813	3,87,170 0 0	15,44,650 0	1,20,682 0 0	1,01,554 0 0	6,09,406 0 0	90,517	65,674	156,191
Comparison.									
Total for corresponding last 9 days of previous year ...	36,976	15,646 0 0	53,602 0	5,125 0 0	25,017 0 0	45,791 0 0	4,165	2,457	6,622
Per mile of railway corresponding week of previous year ...	248	105 0 0	338 0	32 0 0	157 0 0	294 0 0	.....	.....	.....
Total to corresponding date of previous year	969,536	3,86,160 0 0	14,84,049 0	1,11,703 0 0	1,48,612 0 0	6,46,480 0 0	106,901	57,666	164,567

* Audited up to week ending 10th May 1902.
† Coaching traffic calculated on 130 miles only.

Printed at the Printing Office, and published by the Book Depôt, of the Bengal Secretariat, Writers' Buildings, in the City of Calcutta, on 16th July 1902.

REGISTERED No. C029.]

No. 30 of 1902.

The Calcutta Gazette.

WEDNESDAY, JULY 23, 1902.

CONTENTS.

	Page
PART I.—Orders and Notifications by the Lieutenant-Governor of Bengal, the High Court, Government Treasury, &c.	1033—1048
PART IA.—Orders and Notifications by the Government of India	123—124
PART IB.—Orders by the Lieutenant-Governor of Bengal	143—146
PART II.—Advertisements	899—920
PART III.—Acts of the Bengal Council	Nil
PART IV.—Bills of the Bengal Council	Nil
PART IVA.—Proceedings of the Bengal Legislative Council	Nil
PART V.—Acts of the Governor-General's Council assented to by the Governor-General	Nil
PART VI.—Bills introduced into the Council of the Governor-General for making Laws and Regulations or published under Rule 23	Nil
APPENDIX.—Marine Notifications	277—287
SUPPLEMENT No. 30:—	
Resolution reviewing the Triennial Report on the working of the Charitable Dispensaries in Bengal and the Calcutta Medical Institutions for the years 1899, 1900 and 1901	1037
Resolution on the Reports on Inland Emigration for the year 1901	1043
Resolution on the Annual Report on the Reformatory Schools at Alipore and Hazaribagh for the year 1901	1046
District Road Fund Account for the quarter ending 31st March 1902	1048
Working of the Fire Brigade in the Town and Suburbs of Calcutta and in the Municipality of Howrah during the year 1901-1902	1052
Statistical Return of Crops, Prices-Current, Circular and Eastern Canal, Results of Meteorological Observations, Railway Traffic Receipts, &c., &c.	1053—1079

PART I

Orders and Notifications by the Lieutenant-Governor of Bengal, the High Court, Government Treasury, &c.

ORDERS BY THE LIEUT.-GOVERNOR OF BENGAL.

TOUR OF HIS HONOUR THE LIEUTENANT-GOVERNOR OF BENGAL DURING JULY AND AUGUST 1902.

Miles. (by rail).	Day of the— Week.	Day of the— Month.	Place.	Time (Railway time).	Remarks.
	Wednesday	July 23rd	Halt.		
	Thursday	,, 24th	Dacca ... dep.	0-55	By Mail train. Private departure.
75	.....	.....	Mymensingh arr.	6-18	Leave the train at 7-30 A.M. local time. Public arrival.
			Mymensingh dep.	23-0	By special train. Private departure.

Miles (by rail).	DAY OF THE— Week.	Month.	Place.	Time (Railway time).	REMARKS.
75	Friday	July 25th	Dacca ... arr.	5-0	Leave the train early and embark on *Rhotas*, which will leave at once. Private departure. Anchor in Dhullasory river.
	Saturday	„ 26th	*En route* ...	...	Call at Goalundo for mails about 10 A.M. Anchor below Kushtea.
	Sunday	„ 27th		...	Call at Kushtea early for mails and at Sara Ghat about 11 A.M. Anchor below Rampur Boalia.
	Monday	„ 28th	.....	...	Anchor at Godagiri.
	Tuesday	„ 29th	Malda ... arr.	19-0	Private arrival.
	Wednesday	„ 30th	Halt ...	...	Visit Pandua.
	Thursday	„ 31st			
	Friday	Aug. 1st			Visit Gaur.
	Saturday	„ 2nd	Malda ... dep.	5-30	Anchor at night off mouth of Bhagirathi river.
	Sunday	„ 3rd	Azimganj ... arr.	16-0	Private arrival.
	Monday	„ 4th	.....	...	Drive to Berhampur and rejoin *Rhotas*.
	Tuesday	„ 5th	Halt.		
	Wednesday	„ 6th	Berhampur... dep.	5-30	Anchor off Krishnagar at night.
	Thursday	„ 7th	Halt.		
	Friday	„ 8th	Krishnagar dep.	5-30	
473			Calcutta ... arr.	...	Land at Takta Ghat some time during the afternoon. Arrival private.

NOTE.—The party accompanying His Honour will be—

Lady Woodburn	Throughout the tour.
Miss Woodburn	
The Hon'ble Mr. C. E. Buckland, C.I.E., Chief Secretary to Government.	
Major Strachey, Private Secretary ...	
Captain Bignell, Aide-de-Camp ...	
Mrs. Lord, Housekeeper	
An English maid	
Three clerks, Private Secretary's Office ...	
About 20 servants	
The Postmaster, Lieutenant-Governor's Camp Post Office.	
Mr. D. B. Horn, Secretary to Government, Public Works Department ...	From Godagiri to Berhampur.
The Hon'ble Mr. Bourdillon, C.S.I., Member of the Board of Revenue, and Mrs. Bourdillon	At Malda.
Captain Anderson, I.M.S., and a Hospital Assistant	From Goalundo to Calcutta.

The usual salute will be fired on His Honour's arrival at Calcutta.

DARJEELING,
The 6th July 1902.

J. STRACHEY, MAJOR,
Private Secy. to the Lieut.-Govr. of Bengal.

No. 149T.

The 22nd July, 1902.—In exercise of the power conferred by sections 36 and 48 of the Indian Councils Act, 1861 (24 and 25 Vict., c. 67), the Lieutenant-Governor is pleased to appoint Saturday, the 9th August, 1902, at 11 A.M., as the time, and the Council Chamber in the Bengal Secretariat as the place, for a meeting of the Bengal Legislative Council.

By order of the Lieutenant-Governor of Bengal,

F. G. WIGLEY,
Secretary to the Bengal Council.

No. 3071A.

APPOINTMENTS AND TRANSFERS.

GENERAL.—*No. 2132A.D.—The 15th July 1902.*—Mr. H. L. Fell, substantive *pro tempore* Deputy Magistrate and Deputy Collector, Purnea, is transferred to the head-quarters station of the Faridpur district.
Purnea.
Faridpur.

No. 2169A.D.—The 18th July 1902.—Major G. A. Welman, 13th Madras Infantry, is appointed to act as Cantonment Magistrate of Barrackpore and Dum-Dum, during the absence, on leave, of Captain T. S. Barton, or until further orders.
24-Parganas.

No. 2176A.D.—The 19th July 1902.—Babu Dwarka Nath Mitter, Subordinate Judge and Assistant Sessions Judge, Saran, is appointed to be a District and Sessions Judge of the third grade, with effect from the 15th July 1902, *vice* Babu Joges Chandra Mitter, retired.
Saran.
Dacca.

Babu Dwarka Nath Mitter is also appointed to act, until further orders, as District and Sessions Judge of Dacca.

No. 2188A.D.—The 19th July 1902.—Babu Monmotho Coomar Bose, Deputy Magistrate and Deputy Collector, Jessore, is transferred to the head-quarters station of the Bogra district.
Jessore.
Bogra.

No. 2191A.D.—The 19th July 1902.—Babu Fakir Chunder Chatterjea, Deputy Magistrate and Deputy Collector, on leave, is posted to the head-quarters station of the Jessore district.
Jessore.

No. 2198A.D.—The 19th July 1902.—Mr. W. Maude, Deputy Commissioner of Ranchi, is appointed to act as Judicial Commissioner of Chota Nagpur, during the absence, on leave, of Mr. R. R. Pope, or until further orders.
Chota Nagpur.

No. 2200A.D.—The 19th July 1902.—Mr. W. S. Coutts, Officiating Joint-Magistrate and Deputy Collector, Ranchi, is appointed to act as Deputy Commissioner of that district, during the absence, on deputation, of Mr. W. Maude, or until further orders.
Ranchi.

No. 2243A.D.—The 21st July 1902.—The following Probationary Deputy Collectors are posted to the head-quarters stations of the districts mentioned against their names:—

Babu Manmatha Nath Sen	...	...	...	Dacca.
„ Bhujendra Nath Mukerjee		...	...	Bogra.
„ Tarak Chandra Ray	...	...	...	Khulna.
„ Durga Prosad	...	...	...	Shahabad.
Maulvi Anisuzzaman Khan	...	...	...	Patna.

No. 2255A.D.—The 21st July 1902.—Maulvi Mohammad Habibullah, Deputy Magistrate and Deputy Collector, on leave, is posted to the head-quarters station of the Bhagalpur district.
Bhagalpur.

No. 2257A.D.—The 21st July 1902.—Babu Mokunda Deb Mookerjee, Deputy Magistrate and Deputy Collector, Bhagalpur, is transferred to the head-quarters station of the Patna district.
Bhagalpur.
Patna.

No. 2259A.D.—The 21st July 1902.—Babu Ram Anugrah Narayan Singh, Deputy Magistrate and Deputy Collector, Patna, is transferred to the head-quarters station of the Muzaffarpur district.
Patna.
Muzaffarpur.

EDUCATION.—*No. 2134A.D.—The 15th July 1902.*—Babu Mohini Mohan Chaudhuri, Professor, Hooghly College, is appointed to be Assistant Inspector of Schools, Chota Nagpur Division, with effect from the 15th September 1902, *vice* Babu Brajendra Kumar Guha, about to retire.

Hooghly.
Chota Nagpur Division.

No. 2137A.D.—The 15th July 1902.—Mr. H. A. Stark, Head Master, Anglo-Persian Department, Calcutta Madrasah, is appointed to be Inspector of Schools, Orissa Division, with effect from the 8th August 1902, *vice* Babu Jagat Bandhu Laha, about to retire.

Calcutta.
Orissa Division.

No. 2139A.D.—The 15th July 1902.—Maulvi Amjad Ali, Head Master, Patna Collegiate School, is appointed to be Head Master in the Anglo-Persian Department of the Calcutta Madrasah, with effect from the 8th August 1902, *vice* Mr. H. A. Stark.

Patna.
Calcutta.

No. 2141A.D.—The 15th July 1902.—Babu Mohini Mohan Dutt, Professor, Krishnagar College, is appointed to be Head Master of the Patna Collegiate School, with effect from the 8th August 1902, *vice* Maulvi Amjad Ali.

Nadia.
Patna.

No. 2143A.D.—The 15th July 1902.—Babu Khagendra Nath Mitra, M.A., is appointed substantively *pro tempore* to class VIII of the Provincial Educational Service, with effect from the 8th August 1902, in the resulting vacancy, *vice* Babu Jagat Bandhu Laha, about to retire, and to be a Professor in the Krishnagar College, *vice* Babu Mohini Mohan Dutt.

Nadia.

No. 3056A.—The 22nd July 1902.—Babu Bipin Vihari Gupta, Officiating Principal of the Ravenshaw College, Cuttack, is confirmed in that appointment.

Cuttack.

LEGISLATIVE.—*No. 3065A.—The 22nd July 1902.*—In exercise of the powers conferred by section 45 of the Indian Councils Act, 1861 (24 and 25 Vict., c. 67), and section 1 of the Indian Councils Act, 1892 (55 and 56 Vict., c. 14), and the orders issued thereunder, and with the previous sanction of His Excellency the Viceroy and Governor-General, the Lieutenant-Governor is pleased to nominate Mr. David Bayne Horn, Officiating Secretary to the Government of Bengal, Public Works Department (Irrigation and Marine Branches), to be a Member of the Council of the Lieutenant-Governor of Bengal.

Council.

LEAVE.

GENERAL.—*No. 2196A.D.—The 19th July 1902.*—Mr. R. R. Pope, Judicial Commissioner of Chota Nagpur, is allowed leave for two months and eleven days, under article 291 of the Civil Service Regulations, with effect from the 22nd July 1902.

Chota Nagpur.

No. 2232A.D.—The 19th July 1902.—Babu Abhoy Prosad Das, Deputy Magistrate and Deputy Collector, is allowed combined leave for eight months, viz., privilege leave for seventeen days, under article 264A of the Civil Service Regulations, with effect from the 21st April 1902, on which date he was relieved of his Settlement duties in North Bihar, and leave on medical certificate for the remaining period, under article 369 of the Regulations.

REGISTRATION.—*No. 2204A.D.—The 19th July 1902.*—Maulvi Abdul Aziz, Special Sub-Registrar of Noakhali, is allowed leave for twenty-five days, under article 370 of the Civil Service Regulations, with effect from the afternoon of the 16th June 1902.

Noakhali.

The following orders are republished from the *Assam Gazette* :—

No. 5299G.—The 5th July 1902.—Privilege leave of absence for three months, under article 291 of the Civil Service Regulations, is granted to Mr. H. C. Barnes, I.C.S., Officiating Deputy Commissioner, Goalpara, with effect from the 12th July 1902, or the subsequent date on which he may avail himself of it.

No. 5300G.—The 5th July 1902.—Mr. A. H. Cuming, I.C.S., Officiating Deputy Commissioner, Garo Hills, is appointed to officiate as Deputy Commissioner, Goalpara, during the absence, on leave, of Mr. H. C. Barnes, I.C.S., or until further orders.

No. 5301G.—The 5th July 1902.—Mr. T. M. Browne, Assistant Superintendent of Police and Commandant, Garo Hills Military Police Battalion, is appointed to hold charge of the office of the Deputy Commissioner, Garo Hills, in addition to his own duties, during the absence, on deputation, of Mr. A. H. Cuming, I.C.S., or until further orders.

C. E. BUCKLAND,
Chief Secy. to the Govt. of Bengal.

NOTIFICATION—No. 2180A.D.

The 19th July 1902.—An examination of candidates for recruiting the staff of the Superior Police Officers in Bengal and Assam will be held in Calcutta in November 1902 on dates to be notified hereafter.

2. At this examination only such European candidates as have been nominated by the Lieutenant-Governor of Bengal will be permitted to present themselves.

3. The candidate should submit a copy of his baptismal certificate, in the absence of which sufficient evidence as to age should be forwarded with the application for admission to the examination. His age must not be less than 19 or more than 24 years on the 30th September 1902. A medical certificate in the form annexed will be required from each selected candidate after he has passed the competitive examination and before he is appointed to the Service. The certificate will be granted by a Presidency Surgeon, viz., the Professor of Midwifery, Medical College, on the requisition of the Under-Secretary to Government, to whom applications should be made. In the event of the opinion of the Medical Officer being unfavourable to the candidate, an appeal will lie to the Medical Board and the decision of the Board will be final.

4. A certificate that the candidate is able to ride and is of active habits, signed by a District Magistrate or by the Commissioner of Police, Calcutta, must also be submitted.

5. Applications, accompanied by the necessary certificates, except medical certificate, must be sent to the Private Secretary to His Honour the Lieutenant-Governor not later than two months before the examination is held. Such applicants as are granted nominations will receive an intimation to that effect.

6. The subjects of examination and the number of marks to be allotted will be as follows:—

	Marks.
Writing and composition: *Impromptu* essay upon some given subject	150
Arithmetic (no special text-book) and Euclid, Books I to IV and VI: also easy Deductions ...	300
Algebra, up to and including the Binomial Theorem (text-book—Todhunter's Algebra)	
Plane Trigonometry, up to and including the Solution of Triangles and Mensuration (text-book—Todhunter's Plane Trigonometry)	
English History and Literature and Indian History (Elementary)	200
Geography, Asia (especially India) and Europe ...	150
Not more than *two* of the following languages:—	
Latin, Greek, Sanskrit, Arabic, French, German, Persian, or *one* of the Vernacular* languages of the Province, *i.e.*, either Hindi (Kaithi character) or Bengali ...	200 each.
Total ...	1,200

7. Candidates who have been permitted to appear at the examination must intimate to the Under-Secretary to the Government of Bengal in the Appointment Department, at least one month before the examination is held, which are the two languages in which they desire to be examined. They must at the same time remit a fee of Rs. 20, and unless this fee is paid, will not be allowed to appear at the examination.

8. Two candidates will be selected at the next examination. The two candidates who obtain the highest marks will, on their producing the required medical certificate and subject to such further examination in riding as the Lieutenant-Governor may prescribe, be appointed as Probationary Assistant Superintendents of Police. No candidate will be admitted to the department who obtains less than 500 marks in all.

9. A candidate is not allowed to compete at the examination for admission to the Police Department more than twice.

C. E. BUCKLAND,

Chief Secy. to the Govt. of Bengal.

* NOTE.—The Vernacular Standard will be a high one, involving a thorough knowledge of the language, and ability to write and read the written character with facility.

FORM OF CERTIFICATE.

Special Certificate of Physical fitness for Government Service.

I, *do hereby certify that I have examined , a candidate for employment in

His age is, by his own statement, years, and by appearance years.

(*a*) General conformation.

(*b*) Vision.

(*c*) Hearing.

(*d*) Lungs.

(*e*) Heart.

(*f*) Liver.

(*g*) Spleen.

(*h*) Hernia, present *or* absent.†

(*i*) Hydrocele, present *or* absent †

(*j*) Glycosuria, present *or* absent.†

(*k*) Albuminuria, present *or* absent.†

(*l*) Distinguishing marks.

I consider that he is of sound health and good physique and capable of bearing fatigue and exposure, and that he is fit to enter the service of Government.†

I consider him unfit to enter the service of Government for the reason given at † .

Place

Date

* Designation of Medical Officer.
† Strike out "present" or "absent" in (*h*), (*i*), (*j*) and (*k*), and whichever of the concluding sentences does not apply.

NOTIFICATION—No. 2221A.D.

The 19th July 1902.—The report of the Central Examination Committee having been received, the result of the half-yearly departmental examination of the assistants of the Opium Department, held on the 28th and 29th May 1902, is published for general information.

(1) The following officers have passed partially and are still liable to examination in the subject or subjects mentioned opposite their names in column 4 :—

Serial No.	Name.	Now passed in—	Still liable to examination in—
1	2	3	4
1	Mr. H. A. Jones	Hindi (Nagri character) ...	Surveying.
2	„ A. F. Bryan	Opium Laws and Rules and Hindi (Nagri character).	Ditto and Urdu (Persian character).

C. E. BUCKLAND,
Chief Secy. to the Govt. of Bengal.

REVENUE DEPARTMENT—(FORESTS).

NOTIFICATION—No. 2657 For.

The 18th July 1902.—The Lieutenant-Governor, with the previous sanction of the Governor-General in Council, is hereby pleased to declare, under the provisions of section 26 of the Indian Forest Act (Act VII of 1878, as amended by Act V of 1890), that the area specified below, which in Notification dated the 6th December 1884, was declared to be Reserved Forest under section 19 of the Act, shall cease to be Reserved Forest, with effect from the date of this Notification :—

Jalpaiguri.

Name of portion of reserve disforested.	District.	Pargana.	Area in acres.
Portion of Gaburbasra Reserve ..	Jalpaiguri ...	Buxa ...	886·2

Boundaries.—North-Bhutan State, east-Rangamatti Tea Estate, south-Gaburbasra Reserved Forest, west-Gaburbasra River.

Brief description.—A narrow strip of land lying between the Gaburbasra River and the Rangamatti Tea Estate.

Reasons for disforestation.—Made over to the Imperial Tea Company in exchange for an equivalent area of the Chuapara Tea Estate belonging to the aforesaid Company.

W. C. MACPHERSON,
Offg. Secy. to the Govt. of Bengal.

NOTIFICATION—No. 2658For.

The 18th July 1902.—It is hereby notified, under section 4 of the Indian Forest Act (Act VII of 1878, as amended by Act V of 1890), that it is proposed to constitute the land within the boundaries described below Reserved forest under the provisions of the said Act :—

Jalpaiguri.

District.	Pargana.	Area.	Boundaries.
1	2	3	4
Jalpaiguri ...	Buxa	Acres. 887	*North.*—Buxa reserved forest. *East.*—Ramiatong or Garam river. *South.*—A demarcated line. *West.*—A demarcated line coinciding with the eastern boundary of the Chuapara Tea Estate.

The Lieutenant-Governor is pleased to appoint the Deputy Commissioner of Jalpaiguri to be the Forest Settlement Officer under the provisions of Chapter II of the said Act to enquire into and determine the existence, nature and extent of any rights alleged to exist in favour of any person in or over any land combined within the boundaries specified above, or in or over any forest produce to be found therein, and to deal with the same as by law provided.

The Lieutenant-Governor is also pleased, under section 16 of the Indian Forest Act, to appoint the Commissioner of the Rajshahi Division to hear appeals from the decisions of the Forest Settlement Officer as above appointed.

W. C. MACPHERSON,
Offg. Secy. to the Govt. of Bengal.

REVENUE DEPARTMENT—(OPIUM).

NOTIFICATION—No. 2699-O.

The 17th July 1902.—Mr. W. S. Burt, Assistant Opium Agent, in charge Bareilly Division, is granted privilege leave for three months, under article 264A of the Civil Service Regulations, combined with furlough for nine months, under article 371 of the Civil Service Regulations, with effect from the 9th September 1902, or any subsequent date on which he may avail himself of it.

Bareilly and Shahjehanpur.

Mr. C. F. Russell, Assistant Opium Agent, Shahjehanpur, is appointed to perform the duties of Sub-Deputy Opium Agent, Bareilly, until the return of Mr. A. W. Ross from leave.

W. C. MACPHERSON,
Offg. Secy. to the Govt. of Bengal.

REVENUE DEPARTMENT—(LAND REVENUE).

NOTIFICATION—No. 2698L.R.

The 17th July 1902.—Babu Annada Charan Das, Assistant Settlement Officer, employed on the work of recovery of the cost of survey and settlement operations in the district of Chittagong, is allowed, under article 273 (*a*) of the Civil Service Regulations, privilege leave for three months, with effect from the 8th May 1902.

Chittagong.

W. C. MACPHERSON,

Offg. Secy. to the Govt. of Bengal.

NOTIFICATION—No. 2702L.R.

The 21st July 1902.—Under section 3 of the Bengal Survey Act, V (B.C.) of 1875, the Lieutenant-Governor is pleased to order that a survey shall be made of all the lands lying between the southern boundaries of thanas Tegra, Begusarai and Gogri, in the district of Monghyr (on the north of the Ganges), and that part of the southern high bank of the Ganges which lies within the district of Monghyr (on the south), and that the boundaries of estates, tenures and mauzas be demarcated on the said lands.

Monghyr.

W. C. MACPHERSON,

Offg. Secy. to the Govt. of Bengal.

GENERAL DEPARTMENT—(EMIGRATION).

NOTIFICATION—No. 2202.

The 29nd July 1902.—The following Notification is published in the *Calcutta Gazette* for general information:—

No. 1569—23-6, dated Simla, the 10th July 1902.

NOTIFICATION—By the Govt. of India, Dept. of Revenue and Agriculture.

THE following draft of a Notification which it is proposed to issue in exercise of the powers conferred by section 80 of the Indian Emigration Act, 1883 (XXI of 1883), is published, as required by section 81 of the said Act, for the information of persons likely to be affected thereby, and notice is hereby given that the draft will be taken into consideration by the Governor-General in Council on or after the 12th of August 1902.

2. Any objection or suggestion which may be received from any person with respect to the draft before the date fixed as aforesaid will be considered by the Governor-General in Council.

Draft Notification.

In exercise of the power conferred by section 80 of the Indian Emigration Act, 1883 (XXI of 1883), the Governor-General in Council is pleased to direct that the following amendment be made in the rules as published with the Notification of the Government of India in the Department of Revenue and Agriculture, No. 94E., dated the 18th March 1886, and subsequently amended, namely:—

In Schedule A for the rule regarding "Iron decks," the following shall be substituted:—

"*Iron decks.*—Every vessel bound to any place west of the Cape of Good Hope, or to Fiji *viâ* South Australia, having iron between-decks, shall have either a substantial watertight wooden deck properly laid over it, or sleeping platforms properly fitted on each side of the vessel in a fore and aft direction equal in area to the between-deck accommodation. These platforms shall be in two tiers at most; but, where the platforms do not provide sufficient accommodation, then additional platforms may be similarly fitted amidships either in a single or double row as may be required, care being taken to provide sufficiently wide clear passages fore and aft between the rows of platforms. The bottom of the lower tier shall be not less than twelve inches from the deck, and the bottom of the upper tier not less than two feet six inches from the bottom of the tier below, and the bottom boards of the lower tier shall be fitted loose in an athwartship direction in sections convenient for easy removal and deck cleaning. A margin board six inches high shall be fitted along the edges of the platforms and, where a double row of platforms is fitted amidships, a board nine inches high shall be fitted fore and aft, dividing such platforms into two equal widths of six feet.

"Mats and extra blankets shall also be supplied for the use of the emigrants to such extent as may be determined by the Surgeon-Superintendent in charge."

W. C. MACPHERSON,

Offg. Secy. to the Govt. of Bengal.

FINANCIAL DEPARTMENT.

NOTIFICATION—No. 3440S.R.

The 16th July 1902.—Babu Giris Chandra Sarkar, Deputy Collector, is appointed Deputy Collector of Income-tax in the district of Faridpur, *vice* Babu Durga Das Mukerjee, and under section 40 of Act II of 1886 is vested with the powers of a Collector under the Act.

Faridpur.

E. W. COLLIN,
Offg. Secy. to the Govt. of Bengal.

NOTIFICATION—No. 1234T.F.

The 18th July 1902.—Babu Prasanna Kumar Bose, Deputy Collector of Income-tax, Calcutta, is allowed leave up to the 31st July 1902, under article 291 of the Civil Service Regulations, in extension of the leave granted to him under the order of the 16th June 1902.

Calcutta.

E. W. COLLIN,
Offg. Secy. to the Govt. of Bengal.

NOTIFICATION—No. 1237T.F.

The 18th July 1902.—Mr. S. G. L. Platts, Assistant Commissioner of Salt Revenue, is allowed privilege leave for three months, under article 291 of the Civil Service Regulations, with effect from the 1st July 1902, or any subsequent date from which he may avail himself of it.

24-Parganas and Midnapore.

E. W. COLLIN,
Offg. Secy. to the Govt. of Bengal.

NOTIFICATION—No. 1240T.F.

The 18th July 1902.—Mr. T. C. Beale, Superintendent of Salt, Cuttack, is appointed to act as Assistant Commissioner of Salt Revenue, during the absence, on privilege leave, of Mr. S. G. L. Platts.

24-Parganas and Midnapore.

E. W. COLLIN,
Offg. Secy. to the Govt. of Bengal.

NOTIFICATION—No. 3431R.P.

The 18th July 1902.—It is hereby notified that, under section 112 of the Cess Act, IX (B.C.) of 1880, the Lieutenant-Governor is pleased to appoint Babu Kunja Behari Kar to be a member of the Terai Branch Road Cess Committee, *vice* Babu Baneshwar Agarwalla, deceased.

Darjeeling (Terai).

E. W. COLLIN,
Offg. Secy. to the Govt. of Bengal.

MEDICAL DEPARTMENT.

No. 1408T.M.—The 16th July 1902.—Dr. U. C. Mukerjee, Civil Medical Officer of Birbhum, is allowed privilege leave for two months, under article 291 of the Civil Service Regulations, with effect from the date on which he may be relieved.

Birbhum.

No. 1410T.M.—The 16th July 1902.—Senior Assistant Surgeon Kunja Lal Sanyal is appointed temporarily to be in charge of the civil medical duties of the station of Birbhum, during the absence, on leave, of Dr. U. C. Mukerjee, or until further orders.

Birbhum.

No. 1801Medl.—The 22nd July 1902.—Military Assistant Surgeon C. A. R. Haegert, Officiating Assistant Apothecary, Medical College Hospital, Calcutta, held charge of the duties of Apothecary of that institution, in addition to his own, from the afternoon of the 14th May to the forenoon of the 20th June 1902.

Calcutta.

No. 1814Medl.—The 22nd July 1902.—The undermentioned passed students of the Medical College, Calcutta, have been admitted into the service of Government as Assistant Surgeons with effect from the dates mentioned against their names:—

Calcutta.

Babu Ganendra Nath Mitra	...	...	29th April 1902.
,, Narendra Nath Mukerjee	...	...	29th ,, ,,
,, Nirad Chandra Mukerjee	...	...	8th May ,,
,, Basanta Kumar Bhowmic	...	...	22nd ,, ,,
,, Aswini Kumar Das	...	...	22nd ,, ,,
,, Gouri Prosad Bhattacharjee	...	...	16th June ,,

No. 1816Medl.—The 22nd July 1902.—Senior Assistant Surgeon Mati Lal Mukerjee is appointed temporarily to have medical charge of Rangpur, during the absence, on deputation, of Major N. P. Sinha, I.M.S., or until further orders.

Rangpur.

E. W. COLLIN,
Offg. Secy. to the Govt. of Bengal.

JUDICIAL DEPARTMENT.

No. 3072A.

APPOINTMENTS AND TRANSFERS.

No. 2147A.D.—The 16th July 1902.—Babu Kedar Nath Chatterjee, Additional Munsif in the district of Backergunge, is appointed to be a Munsif in the same district, to be ordinarily stationed at Barisal.

Backergunge.

No. 2149A.D.—The 16th July 1902.—Babu Satis Chandra Mitra, Additional Munsif of Vishnupur and Kotalpur, in the district of Bankura, is appointed to be a Munsif in the same district, to be ordinarily stationed at Vishnupur.

Bankura.

No. 2151A.D.—The 16th July 1902.—Babu Bepin Behari Das, Additional Munsif of Dacca and Manikganj, in the district of Dacca, is appointed to be a Munsif in the same district, to be ordinarily stationed at the Sadar station.

Dacca.

No. 2153A.D.—The 16th July 1902.—Babu Gagan Behary Chowdhry, Munsif of Munshiganj, now on deputation to Narayanganj, in the district of Dacca, is appointed to be a Munsif in the same district, to be ordinarily stationed at Narayanganj.

Dacca.

No. 2155A.D.—The 16th July 1902.—Babu Ashutosh Gupta, Additional Munsif in the district of Noakhali, is appointed to be a Munsif in the same district, to be ordinarily stationed at Fenny.

Noakhali.

No. 2183A D.—The 19th July 1902.—Babu Pashupati Basu, M.A., B.L., is appointed to act as a Munsif in the district of Burdwan, to be ordinarily stationed at the Sadar station, during the absence, on leave, of Babu Amrita Lal Palit, or until further orders.

Burdwan.

No. 2202A.D.—The 19th July 1902.—Babu Ashutosh Mukerjee, B.L., is appointed to act as a Munsif in the district of Bankura, to be ordinarily stationed at Kotalpur, during the absence, on leave, of Babu Ramlal Dutt, or until further orders.

Bankura.

No. 2206A.D.—The 19th July 1902.—Mr. Syed Nasiruddin Ahmad, Barrister-at-Law, is appointed to act, until further orders, as an Additional Munsif in the district of Saran, to be ordinarily stationed at Chapra.

Saran.

No. 2216A.D.—The 19th July 1902.—Babu Devendro Nath Pal, Munsif of Jangipur, in the district of Murshidabad, on leave, is appointed to be a Munsif in the district of Midnapore, to be ordinarily stationed at Contai, and is vested with the powers of a Judge of a Court of Small Causes for the trial of suits cognizable by such a Court up to the value of Rs. 100, within the local limits of the Contai Munsifi.

Murshidabad.
Midnapore.

No. 2218A.D.—The 19th July 1902.—Babu Nogendra Nath Ghosh, Munsif of Contai, in the district of Midnapore, is appointed to be a Munsif in the district of Murshidabad, to be ordinarily stationed at Jangipur, and is vested with the powers of a Judge of a Court of Small Causes for the trial of suits cognizable by such a Court up to the value of Rs. 50, within the local limits of the Jangipur Munsifi.

Midnapore.
Murshidabad.

No. 2253A.D.—The 21st July 1902.—Babu Aswini Kumar Das, M.A., B.L., is appointed to act as a Munsif in the district of Hooghly, to be ordinarily stationed at Amta, during the absence, on leave, of Babu Gobind Gopal Gupta, or until further orders.

Hooghly.

No. 3058A.—The 21st July 1902.—Babu Jadupati Banerji, Subordinate Judge of Manbhum and Singhbhum in Chota Nagpur, on leave, is appointed to be Subordinate Judge of Midnapore, and is vested with the powers of a Judge of a Court of Small Causes for the trial of suits cognizable by such a Court up to the value of Rs. 500, within the local limits of the Sadar Munsifi of Midnapore.

Chota Nagpur. Midnapore.

No. 3060A.—The 21st July 1902.—Babu Mohendra Nath Roy, Subordinate Judge, Midnapore, is appointed to be Subordinate Judge of Manbhum and Singhbhum in Chota Nagpur, and is vested with the powers of a Judge of a Court of Small Causes for the trial of suits cognizable by such a Court up to the value of Rs. 500, and with the powers of a Munsif for the trial of suits cognizable by a Court of First Instance up to the value of Rs. 1,000, within the local limits of thanas Jhalda and Purulia of the Purulia Munsifi. He is also appointed to perform the functions of a Court under section 3, clause (*d*), of the Land Acquisition Act, I of 1894, within the districts of Manbhum and Singhbhum.

Midnapore. Chota Nagpur.

No. 2166J.D.—The 17th July 1902.—The Revd. Panchanon Biswas, Babu Sri Nath Chowdhury and Babu Mukunda Lal Sarkar are appointed to be Honorary Magistrates of the Sadar Independent Bench, in the district of Pabna.

Pabna.

No. 2194J.D.—The 17th July 1902.—Babu Srinath Mazumdar is appointed to be an Honorary Magistrate of the Independent Bench at Narail, in the district of Jessore.

Jessore.

No. 2198J.D.—The 19th July 1902.—Babu Saligram Singh is appointed to be an Honorary Magistrate of the Independent Bench at Banka, in the district of Bhagalpur.

Bhagalpur.

No. 2207J.D.—The 17th July 1902.—The undermentioned gentlemen are appointed to be Honorary Magistrates of the Sadar Independent Bench, in the district of Jalpaiguri:—

Jalpaiguri.

Babu Aghore Nath Ganguli. | Babu Atul Krishna Bose.

LEAVE.

No. 3064A.—The 15th July 1902.—Babu Ramlal Dutt, Munsif of Kotalpur, in the district of Bankura, is allowed leave for three weeks, under article 306 (*b*) of the Civil Service Regulations, with effect from the date on which he may be relieved.

Bankura.

No. 3068A.—The 21st July 1902.—In modification of the order of the 17th June 1902, Babu Gobind Gopal Gupta, Munsif of Amta, in the district of Hooghly, is allowed leave for four months and fifteen days, under article 370 of the Civil Service Regulations, with effect from the 2nd May 1902.

Hooghly.

POWERS.

No. 2145A.D.—The 16th July 1902.—Mr. M. C. McAlpin, Assistant Magistrate, Champaran, is vested with powers under section 110 of the Code of Criminal Procedure.

Champaran.

No. 2169A.D.—The 18th July 1902.—Major G. A. Welman, 13th Madras Infantry, who has, under the order of this date, been appointed to act as Cantonment Magistrate of Barrackpore and Dum-Dum, is vested with the powers of a Magistrate of the second class. He is also appointed to act as Small Cause Court Judge within the Cantonment limits, and is vested with powers for the trial of suits cognizable by such a Court up to the value of Rs. 50.

24-Parganas.

No. 2185A.D.—The 19th July 1902.—In exercise of the power conferred by sub-section (1) of section 565 of the Code of Criminal Procedure, 1898, the Lieutenant-Governor is pleased to empower the following Magistrates of the first class in the district of Pabna, viz., Maulvi Syud Faizuddin Hosain and Babu Surés Chandra Das, to order, at the time of passing sentence of imprisonment on any person referred to in that sub-section, that the residence or change of residence of such person after release shall be notified as provided by the rules made under sub-section (3) of the said section.

Pabna.

No. 2167J.D.—The 17th July 1902.—The Revd. Panchanon Biswas, Babu Sri Nath Chowdhury and Babu Mukunda Lal Sarkar, who have been appointed to be Honorary Magistrates of the Sadar Independent Bench, in the district of Pabna, are vested with the powers of a Magistrate of the third class.

Pabna.

No. 2195J.D.—The 17th July 1902.—Babu Srinath Mazumdar, who has been appointed to be an Honorary Magistrate of the Independent Bench at Narail, in the district of Jessore, is vested with the powers of a Magistrate of the third class.

Jessore.

No. 2199J.D.—The 19th July 1902.—Babu Saligram Singh, who has been appointed to to be an Honorary Magistrate of the Independent Bench at Banka, in the district of Bhagalpur, is vested with the powers of a Magistrate of the third class.

Bhagalpur.

No. 2208J.D.—The 17th July 1902.—The undermentioned gentlemen, who have been appointed to be Honorary Magistrates of the Sadar Independent Bench, in the district of Jalpaiguri, are vested with the powers of a Magistrate of the third class:—

Jalpaiguri.

Babu Aghore Nath Ganguli. | Babu Atul Krishna Bose.

C. E. BUCKLAND,
Chief Secy. to the Govt. of Bengal.

ERRATUM—No. 2096J.D.

The 12th July 1902.—In Government Notifications Nos. 504J.D. and 504½J.D., dated the 10th May 1902, published at pages 677 and 678, Part I of the *Calcutta Gazette* of the 21st idem, appointing Babu Aghore Nath Laha as an Honorary Magistrate of the Independent Bench at Katwa, in the district of Burdwan, and vesting him with the powers of a Magistrate of the third class, *for* "Babu Aghore Nath Laha" *read* "Babu Aghore Nath Saha."

Burdwan.

C. E. BUCKLAND,
Chief Secy. to the Govt. of Bengal.

PUBLIC WORKS DEPARTMENT.

ESTABLISHMENT.

The 17th July 1902.

No. 155.—Babu Jnananjan Saha, Assistant Engineer, third grade, Upper Rajshahi Division, is granted privilege leave for one month and fifteen days, under article 291 of the Civil Service Regulations, with effect from the 7th July 1902, or such subsequent date as he may avail himself of it.

No. 156.—Mr. J. B. Ralph, Assistant Engineer, was attached to the office of the Executive Engineer Upper Rajshahi Division, from 27th June to 9th July 1902.

W. A. INGLIS,
Offg. Secy. to the Govt. of Bengal.

LOCAL COMMUNICATIONS.

The 22nd July 1902.

No. 149LC.—Declaration.—Whereas it appears to the Lieutenant-Governor of Bengal that land is required to be taken by Government at the public expense for a public purpose, viz., for diverting two portions of the side-cut of the road from Umedpur to Bashbunia, in the villages of Hetalia and Ikri, pargana Selimabad, zilla Backergunge, it is hereby declared that for the above purpose two pieces of land measuring, more or less, 8 cottahs 2⅔ chitaks of standard measurement, and bounded as follows:—

Plot No. 1.—On the north and east by Prallad Kulu's land, on the south by Chowaria khal, and on the west by Jagot Dhali's land,

Plot No. 2.—On the north and south by Ikri khal, on the east by Haranulla's land, and on the west by Arjanulla and Haranulla's paddy land,

are required within the aforesaid villages of Hetalia and Ikri.

This declaration is made, under the provisions of section 6 of Act I of 1894, to all whom it may concern.

A plan of the land may be inspected in the office of the Collector of Backergunge.

W. A. INGLIS,
Offg. Secy. to the Govt. of Bengal.

(CIVIL BUILDINGS.)

The 22nd July 1902.

No. 163.—Declaration.—Whereas it appears to the Lieutenant-Governor of Bengal that land is required to be taken by Government at the public expense for a public purpose, viz., for the extension of the Civil Court compound, Barisal, in the village of Barisal, pargana Gredabandar, zilla Backergunge, it is hereby declared that for the above purpose a piece of land measuring, more or less, 18 cottahs 12 chitaks of standard measurement, bounded on the north by Rahimaddi Sikdar's tenanted land and Dasmina Taluqdar's *basha*, on the west by Municipal land and privy, on the south by the Bar Library building and Government

lands, and on the west by Kali Charan Banerjee's holding and east wall, is required within the aforesaid village of Barisal.

This declaration is made, under the provisions of section 6 of Act I of 1894, to all whom it may concern.

A plan of the land may be inspected in the office of the Collector of Backergunge.

W. A. INGLIS,
Offg. Secy. to the Govt. of Bengal.

IRRIGATION DEPARTMENT.

The 22nd July 1902.

No. 157—Corrigendum.—In Declaration No. 127, dated the 17th June 1902, published at page 854, Part I of the *Calcutta Gazette* of the 18th June 1902, regarding the land required for the retired line of embankment in the village of Shibganj, *read* "14 chitaks" *for* "14 cottahs."

No. 158.—Declaration.—Whereas it appears to the Lieutenant-Governor of Bengal that land is required to be taken by Government at the public expense for a public purpose, viz., for a drainage cut at the 8th mile of the Fattehpore Distributary, in the village of Nizampore, pargana Balia, zilla Patna, it is hereby declared that for the above purpose a piece of land measuring, more or less, 1 rood 23 poles of standard measurement, is required within the aforesaid village of Nizampore.

This declaration is made, under the provisions of section 6 of Act I of 1894, to all whom it may concern.

A plan of the land may be inspected in the office of the Deputy Collector, Sone Canals, Revenue Division.

No. 159.—Declaration.—Whereas it appears to the Lieutenant-Governor of Bengal. that land is required to be taken by Government at the public expense for a public purpose, viz , for a retired line of embankment at Govindpur in mile 60, schedule D, No. 69, pargana Muragacha, zilla 24-Parganas, it is hereby declared that for the above purpose a piece of land measuring, more or less, 17 bighas 14 cottahs 12 chitaks and 7 square feet of standard measurement, bounded on the north by Government embankment, on the east and south by the land of Kshetra Baidya, Badan Mandal, Srimanta Gharami, Jadu Haldar, Govinda Saha, Nanda Purkait, Sankar Purkait, Srimanta Haldar. Nitai Chand Baidya, Joggeshwar Haldar, Nafar Jali, Damoo Haldar, Naba Haldar, Paran Purkait, Dwarika Nath Saha, Umesh Chandra Ghosh, Pramada Baidya, Dina Nath Chowdhury, Barada Ghosh, Srimanta Baidya, Palan Chandra Baidya, Joynarain Haldar, and Raj Krishna Mandal and on the west by the land of Kshetra Baidya, Badan Mandal, Srimanta Gharami, Jadu Haldar, Gobinda Saha, Nanda Purkait, Sankar Purkait, Srimanta Haldar, Nitai Chand Baidya, Joggeshwar Haldar, Haran Haldar, Pramada Charan Baidya, Barada Ghosh, Srinath Baidya, Rai Charan Haldar, Paran Krishna Purkait, Raj Krishna Mandal and the excavation pit land of the Government embankment, is required within the aforesaid village of Govindpur.

This declaration is made, under the provisions of section 6 of Act I of 1894, to all whom it may concern.

A plan of the land may be inspected in the office of the Collector of the 24-Parganas.

No. 160.—Declaration.—Whereas it appears to the Lieutenant-Governor of Bengal that land is required to be taken by Government at the public expense for a public purpose, viz., for a retired line of embankment in the villages of Nowpala and Matinala, pargana Mandalghat, zilla Hooghly, it is hereby declared that for the above purpose a piece of land measuring, more or less, 15 bighas 11 cottahs and 2 chitaks of standard measurement, bounded on the—

North—By the Rupnarain left embankment and village Malioke,
East—By the villages of Matinala, and Tamaltala, and portion of Nowpala,
South—By the Bengal-Nagpur Railway line,
West—By the village of Nowpala and portion of Matinala,

is required within the aforesaid villages of Nowpala and Matinala.

This declaration is made, under the provisions of section 6 of Act I of 1894, to all whom it may concern.

A plan of the land may be inspected in the office of the Executive Engineer, Cossye Division, Midnapore.

No. 161.—Declaration.—Whereas it appears to the Lieutenant-Governor of Bengal that land is required to be taken by Government at the public expense for a public purpose, viz., for the construction of a retired line of embankment at Hara, pargana Muragacha, zilla 24-Parganas, it is hereby declared that for the above purpose a piece of land measuring, more or less, 7 bighas 18 cottahs and 14½ chitaks, bounded on the north by the Government embankment, on the east by the village land of Hara, on the south by the Government embankment land belonging to Babu Narsing Chandra Banerji, and on the west by the village land of Hara, is required within the aforesaid village of Hara.

This declaration is made, under the provisions of section 6 of Act I of 1984, to all whom it may concern.

A plan of the land may be inspected in the office of the Executive Engineer, Northern Drainage and Embankment Division, Calcutta.

No. 162.—Notification.—Agreeably to section II of the "Canals Act V (B.C.) of 1864," it is hereby declared that the provisions of the said Act shall, from and after the date of publication of this notification, be applicable to the undermentioned navigable channels for the navigation of steamers and boats:—

1. Atrabanka river from Alypore northwards to Maniekdoho.
2. Madhumati river from Haridaspore southwards to Amtolla.
3 & 4. The Malikatee and Gulatulla khals lying between Matabanga on the Madhumati and Sakharikatee *hât* on the Kaligunga river.
5 & 6. The Satkasima nadi and the Boonchakatee khal lying between Amtolla on the Madhumati river and Mirzapore *hât* on the Kaligunga river.
7. Kaligunga river from Mirzapore *hât* to its junction with the Kocha river near Hulur *hât*.
8. Barisal river from Barisal northwards to its junction with the Ureal Khan at Phooltala.
9. Ureal Khan river from Phooltala northwards to its junction with the Pangasia river.
10. Nyabunga river lying between its junction with the Ureal Khan and Megna rivers.
11. Megna river from its junction with the Nyabunga river northwards to Chandpore.
12. Pudda river from Chandpore northwards to Goalundo.
13. Pangasia river from its junction with the Ureal Khan northwards to its junction with the Ureal Khan again below Madaripore.
14. Old Pudda or Polong khal lying between the Ureal Khan and Pudda rivers *viâ* Domesha.
15. Ureal Khan river from its junction with the Pangasia northwards to its junction with the Myna Katee khal.
16. Myna Katee khal lying between the Ureal Khan and Pudda rivers.
17 & 18. Kumar river from Takirhat southwards to its junction with the Ureal Khan at Madaripore; and again from Takirhat northwards to its junction with the Ureal Khan at Nilukhee.

D. B. HORN,
Offg. Secy. to the Govt. of Bengal.

RAILWAY DEPARTMENT.

The 22nd July 1902.

No. 150R.—Declaration.—Whereas it appears to the Lieutenant-Governor of Bengal that land is required to be taken by Government at the public expense for a public purpose, viz., for extending the Samastipur station yard, Tirhut State Railway, in the village of Magardahi, pargana Saraisa, zilla Darbhanga, it is hereby declared that for the above purpose a piece of land measuring, more or less, 18 chitaks of standard measurement, which is comprised in the land of the Church compound, and is bounded on the north, south and west by the public road, and on the east by the Church compound wall, is required within the aforesaid village of Magardahi in exchange for the railway acquired land measuring 11 cottahs 13 chitaks of standard measurement, situated on the southern side of the Railway Locomotive Office.

This declaration is made, under the provisions of section 6 of Act I of 1894, to all whom it may concern.

A plan of the land may be inspected in the office of the Resident Engineer of Muzaffarpur.

No. 151R.—Declaration.—Whereas it appears to the Lieutenant-Governor of Bengal that land is required to be taken by Government at the public expense for a public purpose, viz., for the proposed crossing of Messrs. Ralli Brothers' siding over Cossipur Road, in the village of Chitpur, pargana Calcutta, zilla 24-Pargaras, it is hereby declared that for the above purpose a piece of land measuring, more or less, 1 bigha 2 cottahs 3 chittaks of standard measurement, bounded on the north partly by the land belonging to Messrs. Ralli Brothers and partly by the tenanted land of Anath Nath Mallick and others, on the east partly by Cossipur Road and partly by the tenanted land of Anath Nath Mallick and others, on the south partly by land belonging to Anath Nath Mallick and others and partly by the land of Kedar Nath Sandel, and on the west partly by the land belonging to Messrs. Ralli Brothers and partly by the land belonging to Anath Nath Mallick and others, is required within the aforesaid village of Chitpur.

This declaration is made, under the provisions of section 6 of Act I of 1894, to all whom it may concern.

A plan of the land may be inspected in the office of the Executive Engineer, Construction Division, Eastern Bengal State Railway, Sealdah.

W. A. INGLIS,
Offg. Secy. to the. Govt of Bengal.

MARINE DEPARTMENT.

The 19th July 1902.

No. 95Marine.—Mr. W. H. Ridler, Acting Branch Pilot, is granted privilege leave for seventeen days on half pay under section 746 (*b*) of the Civil Service Regulations, with effect from the 14th June 1902.

D. B. HORN,
Offg. Secy. to the Govt. of Bengal.

The 21st July 1902.

No. 96Marine.—It is hereby notified that, under the provisions of section 7 of the Chittagong Port Commissioners Act, IV (B.C.) of 1887, Mr. E. Good is re-appointed to be a Commissioner of the Port of Chittagong.

D. B. HORN,
Offg. Secy. to the Govt. of Bengal.

The 22nd July 1902.

No. 97Marine.—The following notification No. 1698, dated the 15th July 1902, issued by the Government of India, Home Department, relative to plague in Constantinople, is republished for general information.

D. B. HORN,
Offg. Secy. to the Govt. of Bengal.

No. 1698, dated Simla, the 15th July 1902.

NOTIFICATION—By the Government of India, Home Department.

THE following telegram is published for general information:—

Telegram, dated Therapia, the 10th July 1902.

From—His Britannic Majesty's Ambassador Extraordinary and Plenipotentiary at Constantinople,

To—His Excellency the Viceroy.

CONSTANTINOPLE clean.

SUBORDINATE CIVIL SERVICE.

No. 3073A.

No. 2208A D.—The 19th July 1902.—Babu Rampada Chatterjea, substantive *pro tempore* Sub-Deputy Collector, is posted to the Rajshahi Division, and is vested with the powers of a Magistrate of the second class on being relieved of his present settlement duties in North Bihar.

Rajshahi Division.

No. 2214A.D.—The 19th July 1902.—Babu Radha Krishna Goswami, substantive *pro tempore* Sub-Deputy Collector, Dacca Division, is posted to the head-quarters station of the Faridpur district.

Faridpur.

No. 2249A D.—The 21st July 1902.—Babu Hari Das Roy, Probationary Sub-Deputy Collector, is posted to the head-quarters station of the Hazaribagh district.

Hazaribagh.

No. 3069A.—The 22nd July 1902.—Babu Kartik Chandra Roy Chaudhuri, Sub-Deputy Collector, is allowed extraordinary leave without allowances for six months, under article 372 of the Civil Service Regulations, in continuation of the furlough granted to him under the order of the 20th October 1900.

C. E. BUCKLAND,
Chief Secy. to the Govt. of Bengal.

SUBORDINATE EDUCATIONAL SERVICE.

No. 3052A.—The 21st July 1902.—Mr. W. Blazey, Foreman Instructor in the Civil Engineering College, Sibpur, is confirmed in class II of the Subordinate Educational Service, with effect from the 30th December 1901.

Howrah.

No. 3054A.—The 21st July 1902.—Mr. G. R. Ballantine, Foreman Instructor in the Civil Engineering College, Sibpur, is confirmed in class II of the Subordinate Educational Service, with effect from the 31st December 1901.

Howrah.

W. C. MACPHERSON,
Offg. Secy. to the Govt. of Bengal.

REGISTRATION DEPARTMENT.

NOTIFICATION—No. 1436P.

The 22nd July 1902.—The Lieutenant-Governor sanctions the abolition of the office of the Joint Sub-Registrar of Madhipura at Gamharia, in the subdivision of Madhipura, in the district of Bhagalpur, with effect from the 3rd June 1902.

Bhagalpur.

C. E. BUCKLAND,
Chief Secy. to the Govt. of Bengal.

JAIL DEPARTMENT.

No. 8809, dated Calcutta, the 22nd July 1902.—Assistant Surgeon Behari Lal Pal made over charge of the Barasat Jail to Assistant Surgeon Ras Behari Baksi on the afternoon of the 4th July 1902.

M. S. EMERSON,
for *Inspector-General of Jails, Bengal.*

CIVIL MEDICAL DEPARTMENT, BENGAL.

No. 2251D., dated Darjeeling, the 16th July 1902.—Assistant Surgeon Mahendra Nath Das, of the Ghatal Subdivision and Dispensary, in the Midnapore district, is appointed to the Rampur Boalia Dispensary, Rajshahi, *vice* Assistant Surgeon Hari Nath Ghosh, transferred.

No. 2255D., dated Darjeeling, the 16th July 1902.—Assistant Surgeon Hari Nath Ghosh, of the Rampur Boalia Dispensary, Rajshahi, is appointed to the Ghatal Subdivision and Dispensary, in the Midnapore district, *vice* Assistant Surgeon Mahendra Nath Das, transferred.

T. H. HENDLEY, COL., I.M.S.,
Inspector-General of Civil Hospitals, Bengal.

TREASURY NOTICES.

UNCOVENANTED DEPUTY COLLECTOR MAULVI SYED KARAM HOSSEIN has been placed in charge of the Hazaribagh Treasury, with effect from the afternoon of the 18th June 1902, and is authorised to draw bills on other Treasuries.

KRISHNAKALI MUKHARJI, *Pers. Asst. to Commr.*, for *Offg. Commr.*

COMMR.'S OFFICE, CHOTA NAGPUR, RANCHI, *the 14th July 1902.*

HIGH COURT NOTICE.

HIGH COURT.

The 9th July 1902.

THE following rule framed by the High Court of Judicature at Fort William in Bengal, under clause *i*, section 20 of the Court-fees Act, VII of 1870, confirmed by the Local Governments of Bengal and Assam and sanctioned by the Governor-General in Council, is published for general information.

By order of the High Court,

R. SHEEPSHANKS,
Registrar.

[CIVIL.]

Rule No. 5 of 1902.

1. In Article 5 of Part II of Rule 1, Chapter II, page 67 of the High Court's General Rules and Circular Orders (Civil), *cancel* the words "any notice or citation, irrespective of the number of such publications," and *substitute* therefor the following—the notification of any proceeding or process, not specially mentioned in any article of this Part, irrespective of the number of such publications.

2. In the second line of Article 5 of Part III of the same Rule and Chapter, page 70, *ibid*, between the words "any," "and," "process," *insert* the words proceeding or

By order of the High Court,

HIGH COURT,
The 9th July 1902.

R. SHEEPSHANKS,
Registrar.

Sheriff's Office, the 23rd July 1902.

NOTICE is hereby given that the Fourth Criminal Sessions of the year 1902 of the High Court of Judicature at Fort William in Bengal, for the Town of Calcutta and Factory of Fort William, and the places subordinate thereto, will be held at the Court-house, in the Town of Calcutta, on Monday, the eighteenth day of August next, at 11 o'clock in the forenoon, and thence forward from day to day until the said Sessions be over. And it is hereby proclaimed that all persons who are to prosecute any of the prisoners to be brought up for trial at the said Sessions be present then and there to prosecute.

H. M. RUSTUMJEE, *Sheriff.*

শরিফ আফিস, সন ১৯০২ সাল তারিখ ২৩শে জুলাই।

সকলকে সমাচার দেওয়া যাইতেছে যে সুবা বাঙ্গালার কোর্ট উইলিয়ম দুর্গের অধীন শহর কলিকাতার ও অন্যান্য স্থানের ফৌজদারী বিচার নিষ্পত্তি জন্য আগামী সন ১৯০২ সালের ১৮ই আগষ্ট সোমবার বেলা ১১ ঘটিকার সময় এবং যে পর্য্যন্ত সেশিয়ানের কার্য্য শেষ না হয় প্রতিদিন উক্ত সময়ে কলিকাতার হাইকোর্টের আপন আদালত ঘরে সন ১৯০২ সালের চতুর্থ ক্রিমিনেল সেশিয়ান বসিবেক এবং এতদ্দ্বারা প্রচার করা যাইতেছে যে, যে সকল ব্যক্তি কোন কয়েদির বিরুদ্ধে ফৌজদারী মিছিল করিবেক তাহারা উক্ত স্থানে উক্ত সময়ে হাজির থাকিয়া মোকদ্দমা করে ইতি।

এইচ্, এম্, রস্তমজী, সরিফ।

EDUCATION DEPARTMENT, BENGAL.

Subordinate Educational Service.

The 26th April 1902.—Maulvi Mahomed Razeuddin, Persian Teacher of the Rajshahi Collegiate School, under orders of transfer to the Motihari Zilla School (class V), is allowed leave of absence for six months, under article 369 of the Civil Service Regulations, in continuation of that granted to him under the orders of the 9th November 1901.

The 10th July 1902.—Consequent on the appointment of Babu Atul Chandra Banerjea, M.A., Assistant Master of the Chapra Zilla School, to be Assistant Head Master of the Dacca Training School, the following officers are confirmed in the appointments mentioned opposite their names:—

(1) Babu Haran Chandra Gupta (class VIII), Assistant Master, Chapra Zilla School.

(2) Babu Kamala Prosad, B.A., Sub-Inspector of Schools, Godda, in the Sonthal Parganas, and in class VIII of the Subordinate Educational Service.

The 11th July 1902.—Babu Hari Ballav Mandal, Assistant Head Master of the Jalpaiguri Zilla School (class VIII), is allowed leave of absence for three weeks, under article 306 (*b*) of the Civil Service Regulations, with effect from the 28th June 1902, or such subsequent date as he may have availed himself of it.

The following arrangements are sanctioned, consequent on the retirement, with effect from the 1st August 1902, of Babu Abhoy Charan Pal, Assistant Head Master of the Hindu School:—

(1) Babu Abhaya Charan Mitra, M.A., Head Master of the Jessore Zilla School (class II), to be Assistant Head Master of the Hindu School, on the pay of his own grade, *vice* Babu Abhoy Charan Pal, to retire.

(2) Babu Basanta Kumar Das, B.A., Head Master of the Rangpur Zilla School (substantive *pro tempore* in class III), to be Head Master of the Jessore Zilla School, on the pay of his own grade, *vice* Babu Abhaya Charan Mitra, transferred.

(3) Babu Aghor Nath Ghosh, B.A., Assistant Head Master of the Hazaribagh Zilla School (class IV), to be Head Master of the Rangpur Zilla School, on the pay of his own grade, *vice* Babu Basanta Kumar Das, transferred.

(4) Babu Pramatha Nath Bhattacharjea, B.A., Assistant Master in the Hazaribagh Zilla School (class VIII), to be Assistant Head Master of the same institution, on the pay of his own grade, *vice* Babu Aghor Nath Ghosh, promoted.

(5) Babu Baikantha Chandra Ray, M.A., to be an Assistant Master in the Hazaribagh Zilla School, on probation for six months, and substantively *pro tempore* in class VIII of the Subordinate Educational Service, *vice* Babu Pramatha Nath Bhattacharjea, promoted.

The 12th July 1902.—Maulvi Quasimuddin Khan, B.A., Assistant Master in the Monghyr Zilla School (class VIII), is appointed to be an Assistant Master in the Anglo-Persian Department of the Calcutta Madrasah, on the pay of his own grade, *vice* Maulvi Abdul Quadir, transferred.

The 13th July 1902.—Babu Suryya Kumar Ray, B.A., Head Master of the Comilla Zilla School (class IV), is allowed leave of absence for three months, under article 306 (*b*) of the Civil Service Regulations, with effect from the 1st July 1902, and the following arrangements are sanctioned for the performance of the absentee's duties:—

(1) Babu Shastivar Biswas, B.A., Assistant Head Master of the Comilla Zilla School (class V), to act as Head Master of the same institution, *vice* Babu Suryya Kumar Ray.

(2) Babu Upendra Nath Banerjea, M.A., an Assistant Master, Comilla Zilla School (class VIII), to act as Assistant Head Master of the same institution, *vice* Babu Shastivar Biswas.

(3) Maulvi Afsuruddin Ahmed to act as an Assistant Master, Comilla Zilla School, and in class VIII of the Subordinate Educational Service, *vice* Babu Upendra Nath Banerjea.

The 14th July 1902.—The transfer of the following Deputy Inspectors of Schools is sanctioned: —

(1) Babu Kalika Nanda Mukherjea from Palamau to Purnea.

(2) ,, Durga Prasad Tewari from Purnea to Palamau.

The 15th July 1902.—Babu Gagan Chandra Barua, Sub-Inspector of Schools Chittagong Hill Tracts (class VI), is allowed leave of absence for one month, under note to article 294 of the Civil Service Regulations, with effect from the 7th July 1902, or such subsequent date as he may have availed himself of it.

The 17th July 1902.—Babu Asvini Kumar Banerjea, a Sub-Inspector of Schools under the District Board of Mymensingh (class VII), was granted by the Board privilege leave for one month, with effect from the 14th June 1902.

The following arrangements are sanctioned, as a temporary measure, consequent on the absence, on deputation, of Babu Hara Kanta Bose, B.A., an Assistant Master in the Faridpur Zilla School (class VI), to the Victoria Training College, Kurseong, for special training:—

(1) Babu Guru Bandhu Bhattacharjea, B.A., an Assistant Master in the Rajshahi Collegiate School (on a salary of Rs. 20 a month), to act as an Assistant Master in the Faridpur Zilla School and in class VIII of the Subordinate Educational Service during the absence, on deputation, of Babu Hara Kanta Bose, or until further orders.

* * * * *

A. PEDLER,
Director of Public Instruction, Bengal.

RESULTS OF THE FINAL EXAMINATION OF THE DACCA SURVEY SCHOOL FOR THE YEAR 1902.

SECOND DIVISION.

1. Dolegobindo Biswas.
2. Bhupendra Koomar De.

THIRD DIVISION.

1. Bankim Chandra Dey.
2. Jnanendra Nath Ghosh.
3. Upendra Prosad Das.
4. Jagat Chandra Pal.
5. Ganga Charan Dutt.
6. Ivayadhar Kar.
7. Kakorpaty Rajnarayan.
8. Hara Bilash Ghosh.
9. Rash Mohan Das.
10. Lakshminarayan Dan.
11. Radha Raman Banerjee.

CALCUTTA,
The 22nd July 1902.

A. PEDLER,
Director of Public Instruction, Bengal.

JUNIOR SCHOLARSHIPS FOR MUHAMMADANS AND ABORIGINES FOR 1902.

NAME OF SCHOLAR.	Name of Institution from which he appeared.	Kind of Scholarship awarded.	Where made tenable.	REMARKS.
1	2	3	4	5
1. Nazir Ahmad ...	Calcutta Madrasah ...	Mohsin junior scholarship of Rs. 10.	Calcutta Madrasah.	
2. Abdul Guffur ...	Brahmanbaria Annada School.	Mohsin junior scholarship of Rs. 8.	Dacca College.	
3. Syed Abdul Hakim ...	Birbhum Zilla School ...	Ditto	Presidency College.	
4. Zyarat Hossein Khan ...	Manikganj High School	Ditto	Dacca College.	
5. Abdul Mazid ...	Dacca Collegiate School.	Ditto	Calcutta Madrasah.	
6. Ahmad Kabir ...	Calcutta Madrasah ...	Mohsin junior scholarship of Rs. 10.	Ditto.	
7. Sefatullah Sarkar ...	Rajshahi Collegiate School.	Mohsin junior scholarship of Rs. 8.	Ditto.	
8. Md. Abu Cainat ...	Burdwan Albert Victor School.	Ditto ...	.....	
Endowed Scholarships.				
1. Syed Fazlar Rahman ...	Comilla Zilla School ...	Nawab Ahsanullah scholarship of Rs. 10.	Presidency College.	For four years.
2. Ezharuddin Ahmad ...	Jorada H. E. School ...	Amir-i-Kabir's Madrasah scholarship of Rs. 10.	Calcutta Madrasah.	Not transferable.
3. Muhammad Hossein ...	Supaul William's Scho ol	Ditto	Ditto.	Ditto.
4. Syed Nasr Hossein ...	Gaya Sahebganj School	Syed Ali Khan's scholarship of Rs. 10.	Patna College ...	For one year.
Government Special Scholarships.				
1. Abdul Sovan ...	Bihar High School ...	Government special scholarship of Rs. 7.	Temple Medical School, Patna.	
2. Abdul Karim ...	Muzaffarpur Zilla school.	Ditto ...	Patna College.	
3. Ahmad Hossein ...	Patna Collegiate School	Ditto ...	Ditto.	
4. Sheik Ahmadulla ...	Bharaidangi High School	Ditto ...	T. N. Jubilee, Bhagalpur.	
5. Muhammad Amir Hyder..	T. K. Ghosh's Academy	Ditto ...	Patna College.	
6. Azizul Hossein Khan ...	Nitrokona Dutt School	Ditto ...	Calcutta Madrasah.	
7. Fakrul Hossein Kadori ...	Patna Collegiate School	Ditto ..	Presidency College.	
8. Abdul Aziz Khan ...	Sassaram High School	Ditto ...	B. N. College, Bankipore.	
9. Sayyid Nasr Ali ...	Nawab's High School, Murshidabad	Ditto ...	St. Xavier's College.	
10. Ali Azam ...	Chittagong Collegiate School.	Ditto ...	Chittagong College.	
11. Sheik Akramul Huq ...	Nawab's High School, Murshidabad.	Ditto ...	Berhampore College.	
12. Sayyid Amjad Ali ..	Bagirhat High School ...	Ditto ...	Calcutta Madrasah.	
13. Akmal Khan ...	Dacca Collegiate School	Ditto ...	Dacca College.	
14. Muhammad Amanula Khan.	Gaya Zilla School ...	Ditto ...	.....	
15. Samsar Rahman ...	Jessore Zilla School ...	Ditto ...	Calcutta Madrasah ...	
16. Abdul Ahamed ...	Chapra Zilla School ..	Ditto ...	Patna College ...	
17. Nurul Islam ...	Chittagong Municipal School.	Ditto ...	Chittagong College ...	
18. Mirza Muhammad Khalul Serazu.	Calcutta Madrasah ...	Ditto ...	Calcutta Madrasah ...	
19. Muhammad Idu ...	Chapra Zilla School ...	Ditto ...	Bihar School of Engineering.	
20. Sheik Tasnif Hossein ...	Bharaidangi High School	Ditto ...	T. N. Jubilee, Bhagalpur	
Prizes awarded to Muhammadan students during 1902.				
1. Lutf Ali Chaudhuri ...	Dacca Pogose School ...	Prince Jehan Kadir's prize of Rs. 20	.....	
2. Leaqut Hossein ...	Calcutta Madrasah ...	Nawab Zainul Abedin's prize of Rs. 20.	.....	
3. Erfan Ali	City Collegiate School ...	Muhammadan Literary Society's prize of Rs 20.	.....	
4. Asiruddin Ahmad ...	L. M. School, Midnapore	Ditto ...	.....	
5. Abdul Hai	City Collegiate School ...	Sahibzada Rahimuddin's prize of Rs. 20.	.....	
6. Muhammad Abdul Hai ...	Kisoregunge High School	Ditto ...	.....	
7. Abul Faiz Ahmad Ali Khan.	Dacca Madrasah ...	Kasim Arif's prize of Rs. 20.		
8. Muhammad Ali Jan ...	Barari Roy, H. M. T. Bahadur's Free School, Bhagalpur.	Abey Ahmed's prize of Rs. 20.		
9. Abu Ashgar Muhammad Rafiq.	Calcutta Madrasah ...	Abdul Karim Sherasi's prize of Rs. 12.		
10. Syed Muhammad Yusuf ...	Khondrapara High School	Sahebzada Nasiruddin's prize of Rs. 12.		

Government Special Scholarships for aborigines.

NAME OF SCHOLAR.	Name of institution from which he appeared.	Kind of Scholarship awarded.	Where made tenable.	REMARKS.
1	2	3	4	5
1. Khrist Kumar Ekka ...	Ranchi G. M. School ...	Government Special Scholarship of Rs 8 for aborigines	Patna College.	With the privilege of free tuition in a Government college.
2. B. Barla	Ditto ...	Ditto ditto		Ditto

CALCUTTA,
The 21st July 1902.

A. PEDLER,
Director of Public Instruction, Bengal.

SENIOR SCHOLARSHIPS FOR MUHAMMADANS FOR 1902.

NAME OF SCHOLAR.	Name of the school from which he appeared.	Where made tenable.	Course selected.	Value of scholarship.
1	2	3	4	5
	Mohsin Senior Scholarships.			Rs.
1. Jafar Hossain	Calcutta Madrasah ...	Medical College ...	...	16
2. Abdulla	Dacca College ...	Dacca College ...	A Course	14
3. Mofizuddin Ahmed ...	Ravenshaw College ...	Ravenshaw College ...	B „	14
4. Abul Hasnat Muhammad Abdul Hye.	Jagannath College ...	Dacca College ...	B „	12
5. Muhammad Yasin Ali ...	P. M. College, Tangail ...	Presidency College ...	A „	12
	Government Special Senior Scholarships of the value of Rs. 10.			
1. Abu Muhammad Hasamuddin Hyder.	Albert College ...	Presidency College ...	A Course	10
2. Din Muhammad Shaikh ...	St. Xavier's College ...	Ditto ...	B „	10
3. Muhammad Rashid ...	Calcutta Madrasah ...	St. Xavier's College ...	B „	10
4. Khaliber Rahman ...	Patna College ...	Patna College ...	B „	10
5. Zeauddin Ahmed ...	Berhampore College ...	Presidency College ...	B „	10
6. Muhammad Abdul Ghani ...	Patna College ...	Patna College ...	A „	10
7. Samiruddin Bhuihyan ...	Dacca College ...	Dacca College ...	A „	10
8. Syed Janab Ali ...	St. Xavier's College ..	St. Xavier's College ...	B „	10
9. Muhammad Azazar Rahman ...	Dacca College ...	Dacca College ...	A „	10
10. Abdullah Abu Sayied ...	Calcutta Madrasah ...	Presidency College ..	B „	10
	Government Special Senior Scholarships of the value of Rs. 7.			
1. Rafiuddin Ahmed ...	Berhampore College ...	Presidency College ...	B Course	7
2. Muhammad Abdul Ghani ...	Bihar National College	Bihar National College ...	...	7
3. Nuruddin Ahmed ...	Braja Mohan Institution...	Braja Mohan Institution...	A Course	7
4. S. H. Ahmad Sohrwardee ...	Patna College ...	Patna College ...	A „	7
5. Syed Muhammad Ashique ...	Tej Narain Jubilee ...	Tej Narain Jubilee ...	A „	7
6. Mobarak Ali	Calcutta Madrasah ...	Presidency College ...	A „	7
7. Helaluddin Ahmad ...	Dacca College ...	Dacca College ...	A „	7
8. Abu Muhammad Naruddin ...	Berhampore College ...	Berhampore College ...	A „	7
9. Abdul Wadud	Chittagong College ..	Dacca College ...	A „	7
10. Muhammad Hedayetullah ...	St. Xavier's College ...	Bangabasi College ...	A „	7
	ENDOWED SCHOLARSHIPS.			
	Darbhanga Raj Scholarships.			
1. Syed Rufiq Ahmud ...	Calcutta Madrasah ...	Presidency College ...	...	10
2. Shaikh Abdullah	Ditto ...	Ditto ...	A Course	10

DARJEELING,
The 18th July 1902.

A. PEDLER,
Director of Public Instruction, Bengal.

List of successful candidates at the Central Examination of Bengal Madrasahs for the year 1902.

Names arranged in order of merit.

CALCUTTA MADRASAH.

Senior Fourth-year Class.

No.		Division.
1.	Musaddar Ali	1st.
2.	Abdul Jalil	,,
3.	Muhammad Musa	,,
4.	Muhammad Tabarak Ali	,,
5.	Muhammad Jamalullah	,,
6.	Ahmad Ali	,,
7.	Abdullah	,,
8.	Najm-ud-Din	2nd.
9.	Abul Mansur	,,
10.	Aman-ur Reza	,,
11.	Muhammad Azizullah	3rd.
12.	Muhammad Yahya	,,
13.	Habibullah	,,
14.	Abdur Rahman (II)	,,

Senior Third-year Class.

1.	Siddiq Ahmad	1st.
2.	Muhammad Abd-ul Bari	,,
3.	Sayyid Wasi-ud-Din	,,
4.	Masud Ali	,,
5.	Hatim Ahmad	,,
6.	Abd-ul-Majid	2nd.
7.	Abd-ul Jabbar	,,
8.	Abd-ul-Karim	3rd.
9.	Said-ur Rahman	,,
10.	Muhammad Mazhar	,,

Senior Second-year Class.

1.	Muhammad Ruh-ul-Amin	1st.
2.	Ahmad Gul	,,
3.	Muhammad Shafiq-ul Haqq	,,
4.	Aziz-ur Rahman (II)	,,
5.	Abd-ul-Hayy (II)	,,
6.	Abd-ul Karim	,,
7.	Abd-ul Jabbar (I)	2nd.
8.	Abd-ul Ghani (I)	,,
9.	Ijabat-Ullah	3rd.
10.	Mukhlisur Rahman	,,

Senior First-year Class.

1.	Abul Mahamed Muhammad Wajeh	1st.
2.	Muhammad Yaqub (II)	,,
3.	Ajmal Ali	,,
4.	Muhammad Yaqub (III)	,,
5.	Muhammad Amir Ali	,,
6.	Abd-ul Aziz	,,
7.	Abd-ul Bari	,,
8.	Abd-us Subhan	,,
9.	Muhammad Ubayd-ul Haqq	2nd.
10.	Shams-ud-Din	3rd.

CHITTAGONG MADRASAH.

Senior Fourth-year Class.

1.	Abd-ullah	1st.
2.	Mukhtar Ahmad Siddiqui	,,
3.	Wahid-ur Rahman	2nd.
4.	Anwar-Ullah	,,
5.	Hedayat-ur Rahman	,,
6.	Nur Ahmad Khan	3rd.

Senior Third-year Class.

1.	Abd-ul Hakim (I)	1st.
2.	Jan Ali	,,
3.	Muhammad Ishaq (II)	2nd.
4.	Mukhlis-ur Rahman	,,

Senior Second-year Class.

No.		Division.
1.	Muhammad Ismail (III)	1st.
2.	Abd-ur Rahman	,,
3.	Munir Ahmad (II)	3rd.

Senior First-year Class.

1.	Usman Ali	1st.
2.	Tafazzul-ur-Rahman	,,
3.	Muhammad Ishaq	,,
4.	Abd-ul Wajid	2nd.
5.	Abd-ul Ghafur (I)	3rd.
6.	Fazl-ul Haqq	,,

DACCA MADRASAH.

Senior Fourth-year class.

1.	Abd-ur Razzaq	1st.
2.	Samir-ud-Din Ahmad	2nd.
3.	Abd-ul Haqq	,,
4.	Abd-ul Khaleq (I)	,,
5.	Rahim-ud-Din	3rd.
6.	Habib-ur Rahman	,,
7.	Muti-ur Rahman	,,

Senior Third-year Class.

1.	Abd-ul Latif	1st.
2.	Muti-ur Rahman	,,
3.	Abdus Subhan	,,
4.	Amin-ud-Din	,,
5.	Ambar Ali	2nd.

Senior Second-year Class.

1.	Ansar-ud-Din	1st.

Senior First-year Class.

1.	Munir-ud-Din	1st.
2.	Abd-ul-Ghani (Kishorganj)	,,
3.	Muhammad Abd-ul Hadi	,,
4.	Muhammad Yasin	2nd.
5.	Vilayat Husayn	3rd.
6.	Tabarak Ali	,,

HOOGHLY MADRASAH.

Senior Fourth-year Class.

1.	Khabir-ud-Din Ahmad	1st.
2.	Muhammad Mahmud	2nd.
3.	Muhammad Abdur Rahman	,,

Senior Third-year Class.

1.	Abdul Majid	1st.
2.	Muhammad Munir	,,
3.	Sayed Qanaat Hossain	2nd.

Senior Second-year Class.

1.	Qurban Ali	1st.
2.	Warisuddin Ahmed	3rd.

Senior First-year Class.

1.	Muniruzzaman	1st.
2.	Muhammad	2nd.
3.	Ahmad Ali	,,
4.	Serajuddin	3rd.

COMILLAH HUSAMIAH MADRASAH.

Senior Fourth-year Class.

1.	Karim Bakhsh	3rd.

Senior Third-year Class.

1.	Bazlur Rahman	2nd.
2.	Abdul Jabbar	,,

Senior Second-year Class.

1.	Ashraf Ali	3rd.

Senior First-year Class.

No.		Division.
1.	Muhammad Ishaq	1st.

SASARAM MADRASAH.

Senior Fourth-year Class.

1.	Muhammad Rafi	3rd.

SITAKUND MADRASAH.

Senior Third-year Class.

1.	Mubarak Ali	3rd.

Senior First-year Class.

1.	Nuri Ahmad	3rd.

NOAKHALI AHMADIYAH MADRASAH.

Senior Second-year Class.

1.	Anwarullah	2nd.

Senior First-year Class.

1.	Mujibullah	2nd.

E. DENISON ROSS,
Principal, Calcutta Madrasah.

PATNA DIVISION.

ENTRANCE TEST-EXAMINATION FOR PRIVATE STUDENTS.

1. By private students are meant those who do not appear from any school, or who have joined the schools from which they appear after the 1st September 1902, without the consent of the Inspector. "Private students" include school-masters.

2. All private students *without exception* are required to appear at the test-examination of a zilla school. Private candidates from the Darbhanga district should appear at the test-examination of the Muzaffarpur Zillah School.

3. The first day of the test-examination in all the zilla schools will be the 15th December 1902.

4. Each private student will pay a fee of Rs. 2 for the test. The balance, after payment of expenses (stationery, etc), will go as remuneration to the examiners.

5. Private candidates for the test-examination should apply to this office not later than the 18th November 1902. They should forward the certificate granted to them under the transfer rules by the head-master of the school in which they last read, together with a certificate of good character from a respectable person. If a candidate failed at a previous Entrance examination without again joining any school, the Registrar's receipt in original will be accepted in lieu of a transfer certificate.

6. A student who failed to pass the annual examination for promotion to the 1st class in the end of session 1901-1902, and then left the school, can under no circumstances be allowed to appear at the Entrance examination of 1903.

7. The application forms for permission to appear at the Entrance examination will be signed by the head-master of the zilla school at which the candidates have put in their tests, and will be forwarded by him to the Inspector for countersignature, on or before the 10th January 1903.

8. These applications (with the appointed fee) must be forwarded to the Registrar of the Calcutta University by the candidate, when all formalities are concluded, so as to reach him on or before the 22nd January 1903.

9. The next entrance examination begins on 2nd March 1903.

F.A. AND B.A. EXAMINATIONS.

Deputy Inspectors of Schools, Sub-Inspectors of Schools, and *bonâ fide* school-masters of two years' standing, or of six months' standing in the case of those who have been admitted to a former examination of the same class, will be admitted to the above-mentioned examinations. These latter must serve for six months since the date of the examination *last held by the University, i.e.*, in the year previous to the examination to which they wish to be admitted, and they must complete six months' service *before* the submission of their applications to the Inspector for countersignature. The applications of school-masters should be accompanied by a certificate of length of service (with dates) from the Managers of the schools in which they are employed, together with Entrance or F.A. pass certificates, or in the case of plucked candidates with the Registrar's receipt for the last F.A. or B.A. examination, as the case may be, and should reach this office not later than the 15th January 1903.

Candidates should read carefully the certificate which this office is called upon to sign, and should be careful to supply all information and documents required, without which the Inspector must decline to sign the certificate.

The F.A. and B.A. examinations begin on the 16th March 1903.

These applications with fees must be forwarded to the Registrar of the Calcutta University by the candidates themselves so as to reach him on or before the 2nd February 1903.

BANKIPUR,
The 24th June 1902.

HARIDAS BANERJI,
Asst. Inspector of Schools, Patna Division, in charge.

MEMORANDUM.

UNIVERSITY ENTRANCE EXAMINATION.

PRIVATE STUDENTS.

1. Private students are those who do not appear from any school, or who have been transferred from one school to another after the 31st August without the consent of the Inspector.

2. The term "Private students" includes School Masters.

3. Private students must appear at the test examination of any one of the undermentioned schools on dates to be fixed by Head Masters:—

1. Ravenshaw Collegiate School (with the permission of the Principal of the College).
2. Balasore Zilla School.
3. Balasore Christian Mission High English School.
4. Bhadrak High English School.
5. Lakhannath High English School.
6. P. M. Academy.
7. Cuttack Mission High English School.
8. Cuttack Town Victoria High English School.
9. Jajpur High English School.
10. Kendrapara High English School.
11. Puri Zilla School.
12. Khurda High English School.
13. Baripada High English School.
14. Dhenkanal High English School.

4. Every private candidate must satisfy the following conditions:—

(*a*) That he has not failed at the test examination of any Entrance school in the current session.

(*b*) That he has not failed to gain promotion to the first class of any Entrance school at the results of the annual examination of the second class in the last session.

(*c*) That he has left the school in which he last read with a transfer certificate, or (in case of a failed student) is in possession of the Registrar's receipt.

5. Every private candidate must pay a fee of Rs. 2 to the Head Master of the school at which he is to appear for the examination.

6. He must arrange for his identification to the officer conducting the test examination, and he should satisfy the Head Master as to his character, if necessary.

7. The Head Masters of the abovenamed schools are requested to sign the application forms of eligible candidates having a reasonable probability of success at the final examination, and forward the same to this office for countersignature *in time*. Private candidates should make their own arrangements to remit their examination fees and application forms to the Registrar of the Calcutta University.

CUTTACK,
The 17th July 1902.

JAGAT BANDHU LAHA,
Inspector of Schools, Orissa Division.

ORISSA DIVISION AND THE ORISSA TRIBUTARY MAHALS.

OFFICE MEMORANDUM OF THE INSPECTOR OF SCHOOLS, ORISSA DIVISION.

Rules for appearing at the F.A. and B.A. Examinations in 1902 for candidates from the Orissa Division and the Orissa Tributary Mahals who are not students of any affiliated institution.

DEPUTY INSPECTORS OF SCHOOLS, Sub-Inspectors of Schools and *bonâ fide* teachers of recognised English schools who have served as such for the full period of two academical years, or for a term of six months after an examination of the same class last held by the University in the case of those only who were admitted to a former examination of that class, will be admitted to the abovementioned examinations. All applications from school masters should be accompanied by certificates of length of service from the Secretaries of the schools in which they are employed, and should reach this office not later than the 5th January 1903. The application of a school master for permission to appear at the F.A. or

B.A. Examination should be signed by him in the presence of the Secretary or a member of the Managing Committee of the school in which he is employed. The application should be forwarded to the office of the Inspector of Schools, Orissa Division, for countersignature, together with the Registrar's receipt to prove, if this be the case, that the candidate has appeared at the examination in a previous year, and the certificate in proof of his having passed the Entrance or F.A. Examination, as the case may be. Such papers will be sent back to him (the candidate), who will have to send them, together with the examination fee, to the Registrar of the University direct.

2. Candidates should read carefully the form of the certificate which the Inspector of the Division will sign, and should be careful to supply all information and documents required, including the Registrar's receipt, in the case of those who have been admitted to a former examination of the same class, without which the Inspector must decline to sign the certificate applied for.

3. By *bonâ fide* teachers of schools are to be understood teachers who hold regularly paid appointments in English schools teaching at least the Middle English course.

CUTTACK,
The 17th July 1902.

JAGAT BANDHU LAHA,
Inspector of Schools, Orissa Division.

NOTIFICATION.

1902-1903.

IT is hereby notified that of the ten junior scholarships allotted to the Orissa Division, the four second grade scholarships will be awarded to the best successful students of the Division, irrespective of districts, and the Orissa Tributary Mahals on the results of the next Entrance Examination. The six third grade scholarships will be distributed as follows:—

Cuttack, including Dhenkanal	3
Balasore, including Maurbhanj	2
Puri	1

2. Scholarships not taken up by the districts to which they are allotted will be awarded to candidates from other districts standing next on the divisional list.

3. In accordance with Rule 3 of the Revised Junior Scholarship Rules, the abovementioned scholarships may, with the sanction of the Director of Public Instruction, Bengal, be held at any one of the affiliated Colleges or any Government Medical Schools in Bengal which the holder may select.

K. G. GUPTA, *Commissioner.*

CUTTACK, *the 15th July 1902.*

NOTIFICATIONS OF THE BOARD OF REVENUE.

No. 1716B.

NOTICE is hereby given that the Eighth Sale of Opium, the Provision of 1900-1901, will be held at the Government Opium Sale-room, No. 2 Bankshall Street, on Monday, the 4th August 1902, at 11 A.M., and will comprise 4,000 chests, viz:—

	Chests.
Opium manufactured at the Patna Factory, consisting of	2,000
Ditto ditto at the Ghazipur Factory, consisting of ...	2,000
Total ...	4,000

2nd.—The general conditions of the sale now advertised will be the same as usual. They may be ascertained by reference to the Notification issued on the 19th November 1901, and published in the *Government* and *Exchange Gazettes*, or on personal application at the Office of the Board of Revenue.

3rd.—The latest dates for deposit and clearance will be the 9th and 19th August 1902, respectively, that is to say, no Bank of Bengal Receipts, Government Promissory Notes, or other public securities that may be tendered for deposit in redemption of Promissory Notes given by purchasers in the sale-room will be received after 1-30 P.M of Saturday, the 9th August 1902, and no Bank of Bengal Receipts in full payment of lots will be accepted after 3-30 P.M. of Tuesday, the 19th August 1902.

4th.—In addition to the quantity above advertised for sale, the following quantities, more or less, of the opium manufactured at the Patna and Ghazipur Factories will be brought to sale down to December next, on or about the dates specified below. The Board of

Revenue, however, reserve to themselves the right of altering these dates, should circumstances render it expedient to do so:—

Dates.	Manufactured at the Patna Factory; about chests.	Manufactured at the Ghazipur Factory; about chests.	Total; about chests.
On or about Monday, 1st September 1902 ...	2,000	2,000	4,000
On or about Monday, 29th September ,, ...	2,000	2,000	4,000
On or about Monday, 3rd November ,, ...	2,000	2,000	4,000
On or about Monday, 1st December ,, ...	2,000	2,000	4,000
Total ...	8,000	8,000	16,000

By order of the Board of Revenue, L. P.,

H. Wheeler, *Secretary.*

Board of Revenue, L. P., Calcutta, *the 1st July 1902.*

ELECTION OF MUNICIPAL COMMISSIONERS.

NOTIFICATION.

Under Rule 21 (*b*) of the Revised Dispensary Manual it is hereby notified for general information that the following gentlemen have been appointed as members to constitute a Committee for the management of the Dinajpur Sadar Charitable Dispensary:—

1. The District Magistrate.
2. ,, Civil Surgeon.
3. ,, Vice-Chairman of the Dinajpur Municipality.
4. ,, Vice-Chairman of the Dinajpur District Board.
5. Rai Radha Govinda Rai Shaheb Bahadur.
6. Babu Hari Mohan Sinha.
7. ,, Hari Charan Guha.
8. ,, Saroda Kanta Rai.

C. R. Marindin, *Commissioner of Rajshahi.*

Rajshahi Commr.'s Office, Darjeeling, *the 17th July 1902.*

The Calcutta Gazette.

WEDNESDAY, JULY 23, 1902.

PART IA.

Orders and Notifications by the Government of India, &c.

[*Reprinted from the "Gazette of India."*]

MILITARY SECRETARY'S OFFICE.

NOTIFICATION.

Simla, the 17th July 1902.

No. 661M.—His Excellency the Viceroy and Governor-General will leave Simla at 10 A.M., on Friday, the 1st August 1902, and visit Bangalore, Mysore, Ootacamund, and Delhi, returning to Simla on or about the 20th August. His Excellency's departure from and arrival at Simla will be private.

All covers intended to reach His Excellency and party during the journey should be addressed "VICEROY'S CAMP" without the addition of any post-town.

The party accompanying His Excellency on tour is as follows:—

H. W. C. Carnduff, Esq., Officiating Private Secretary.
Lieutenant-Colonel the Hon'ble E. Baring, Military Secretary.
J. B. Wood, Esq., Under-Secretary, Foreign Department.
Captain W. E. A. Armstrong, Officiating Surgeon to the Viceroy.
Captain the Hon'ble J. R. L. Yarde Buller, A.-D.-C.
Captain A. W. F. Knox, A.-D.-C.

All communications connected with business of a mere routine nature should be sent as usual to the head-quarters of the several departments.

By Command,

EVERARD BARING, *Lieut.-Colonel,*
Military Secretary to the Viceroy.

The following orders, issued by the Government of India in the Home Department, are republished for general information.

C. E. BUCKLAND,
Chief Secy. to the Govt. of Bengal.

NOTIFICATIONS.

ESTABLISHMENT.

Simla, the 18th July 1902.

No. 450.—The services of Mr. J. Lang of the Indian Civil Service are replaced at the disposal of the Government of Bengal, with effect from the 6th June 1902.

MEDICAL.

The 18th July 1902.

No. 917.—The services of the undermentioned officers are placed temporarily at the disposal of the Government of Bengal :—

Captain S. Anderson, M.B., I.M.S.
Captain J. W. F. Rait, M.B., I M.S.
Captain H. B. Meakin, M.D., I.M.S.
Captain H. Innes, M.B., I.M.S.

ECCLESIASTICAL.

The 18th July 1902.

No. 279.—The services of the Reverend W. H. Drawbridge, Chaplain of Pachmarhi, Central Provinces, are placed at the disposal of the Government of Bengal, with effect from the 15th July 1902, or the subsequent date on which he may relinquish charge of his duties at Pachmari.

J. P. HEWETT,
Secy. to the Govt of India.

The following orders, issued by the Government of India in the Military Department, are republished for general information.

C. E. BUCKLAND,
Chief Secy. to the Govt. of Bengal.

NOTIFICATIONS.

"LONDON GAZETTE."

Simla, the 18th July 1902.

No. 658.—The following extracts are published for general information :—

"London Gazette" *dated the 20th June 1902, pages 4052 and 4053.*

* * * * * * * *

INDIA OFFICE,
The 20th June 1902.

The King has approved of the following promotions among officers of the Staff Corps, Indian Medical Service and Indian Army Departments, and admissions to the Staff Corps made by the Government of India :—

* * * * * * * *

INDIAN MEDICAL SERVICE.

Majors to be Lieutenant-Colonels.

Dated 1st April 1902.

BENGAL ESTABLISHMENT.

Richard Havelock Charles, M.D.

* * * * * * * *

E. G. BARROW, *Major-General,*
Secy. to the Govt. of India.

The Calcutta Gazette.

WEDNESDAY, JULY 23, 1902.

PART IB.

MUNICIPAL AND LOCAL.

NOTIFICATIONS.

No. 1381T.M.—The 15th July 1902.—It is hereby notified for general information that, under clauses (4) and (5), section 367 of the Calcutta Municipal Act, 1899, the Lieutenant-Governor is pleased to confirm the following declarations prepared by the Corporation of Calcutta under clauses (1) (*c*) (*ii*) and (1) (*a*) (*ii*) of section 367 of the Act :—

Calcutta.

(1) "The Corporation of Calcutta hereby declare, having previously given notice of their intention so to declare, no objections having been received within three months from the publication of such notice, and having received the report of the General Committee, that in all the streets and roads of Wards 1 to 17 and 19 to 25, inclusive, the erection of buildings of the warehouse class will not be allowed without the special permission of the General Committee."

(2) "The Corporation of Calcutta hereby declare, having previously given notice of their intention so to declare, no objections having been received within three months from the publication of such notice, and having received the report of the General Committee, that in all the streets and roads of Wards 16 and 17 the elevation and construction of the frontage of all masonry buildings thereafter erected or re-erected shall, in respect of their architectural features, be such as the General Committee may consider suitable to the locality."

No. 1387T.M.—The 15th July 1902.—It is hereby notified that, under section 27 of the Bengal Municipal Act, III of 1884, as modified up to 1st November 1896, the Lieutenant-Governor is pleased to appoint Mr. F. L. Perrin to be a Commissioner of the Rampur Boalia Municipality, in the district of Rajshahi, *vice* Mr. E. Moore.

Rajshahi.

No. 1455T.M.—The 17th July 1902.—It is hereby notified for general information that, in exercise of the power conferred on him by section 6 of the Bengal Local Self-Government Act, III of 1885, the Lieutenant-Governor is pleased to abolish the Sadar Local Board, in the district of Saran, with effect from 1st September 1902.

Saran.

No. 1431T.M.—The 18th July 1902.—It is hereby notified for general information that, in the exercise of the power vested in the Local Government by section 30 of the Bengal Municipal Act, III of 1884, as modified up to 1st November 1896, the Lieutenant-Governor is pleased to exclude from the operation of section 69 of the Act, so far as it relates to the repairs, maintenance, construction and improvement of roads, the roads lying within the limits of the Samastipur Municipality, a list of which is given below.

Darbhanga.

2. The Lieutenant-Governor is also pleased to authorise the transfer of the said roads to the charge of the District Board of Darbhanga.

Name of road. From—	To—	Length. Fur.	Yds.	Class.	Description, noting the average width of metals (kankar or jhama), culverts and pipe drains and roadside lands.
Magardehi Paker tree.	Magardehi ghat	1	180	I	Average width of road 20 feet in crest, 10 feet in the middle metalled, 10 feet road land on each side of the road. One masonry culvert one span of 3 feet. Length of parapet 8 feet, roadway 14 feet.
Ditto ...	Machratta ...	1	87	I	Jhama and kankar metalling 10 feet wide in the centre. Total width of road 24 feet. Roadside lands 5 to 10 feet on each side. One masonry culvert one span of 2 feet. Roadway 13 feet. Length of parapet 32 feet on the north and 37 feet on the south.
Machratta ...	Durga-Asthan ...	2	80	I	Jhama and kankar metalling 10 feet wide in the centre. Total width of roadway 24 feet. Roadside land 5 to 10 feet on each side; one double pipe drain 6 inches diameter. Roadway 18 feet. Length of parapet 3½ feet. One masonry culvert one span of 3 feet. Roadway 24 feet. Parapet on north 40 feet, on the south 96 feet. Retaining wall on the west 66 feet.
Durga-Asthan ...	Jitwarpur road ...	1	180	I	Jhama and kankar metalling in the centre 10 feet wide. Total width of road 24 feet, having 5 to 10 feet roadside land on each side. There is no culvert on this road.
Jitwarpur road ...	Boundary ...	1	113	II	No jhama or kankar metalling. Width of land 20 feet; one single pipe drain 1¼ inch diameter. Length of parapet 5 feet. Roadway 22 feet.
Eastern Railway crossing.	Durga-Asthan ...	2	109	I	Jhama and kankar metalling in the centre 10 feet wide. Total width of roadway 20 feet, having roadside land from 5 to 30 feet on each side. One single pipe drain 1¼ inch diameter. Parapet 5 feet. Roadway 22 feet. One double pipe drain 1¼ inch diameter. Parapet 7 feet. Roadway 22 feet.

No. 1799L.S.-G.—The 22nd July 1902.—It is hereby notified that, under section 7 of the Bengal Local Self-Government Act, III of 1885, the following gentlemen have been elected to be members of the District Board of Faridpur :—

Faridpur.

Local Boards by which elected.	Names of Members.
Sadar	Babu Prasanna Kumar Roy. „ Mukunda Lal Ganguly. „ Nishi Kanta Guha. Munshi Abdul Gani.
Goalundo	Maulvi Aliozzaman Choudhury. Babu Kali Prasanna Lahiri. „ Nanda Lal Lahiri. Choudhuri Mahamed Ismail Khan.
Madaripur	Babu Ananda Chandra Das Gupta. „ Jogesh Chandra Roy Choudhury. „ Bama Charan Roy Choudhury. Mr. S. M. Bose.

The following gentlemen are appointed under section 7 of the Act to be members of the Board:—

The Deputy Collector or Sub-Deputy Collector in charge of Cess Collection Department, Faridpur.		*Ex-officio.*
The Subdivisional Officer, Goalundo		
Ditto ditto, Madaripur		
The Civil Medical Officer, Faridpur		
The Deputy Inspector of Schools, Faridpur		
The Government Pleader, Faridpur		
Mr. Upendra Narayan Roy.	Maulvi Asadazzaman.	
Babu Govinda Chandra Dutta.	Babu Kamini Kumar Sen.	
Dr. C. S. Mead.	Maulvi Abdur Rahaman.	

No. 1803M.—The 22nd July 1902.—It is hereby notified that the Commissioners of the Monghyr Municipality, in the district of Monghyr, having at a meeting requested the Local Government, under section 23 of the Bengal Municipal Act, III of 1884, as modified up to 1st November 1896, to appoint a Chairman, the Lieutenant-Governor is pleased to appoint Mr. F. J. Jeffries, I.C.S., to be their Chairman, *vice* Mr. C. R. Marriott, I.C.S., resigned.

Monghyr.

DECLARATIONS.

No. 1383T.M.—The 15th July 1902.—Whereas it appears to the Lieutenant-Governor of Bengal that land is required to be taken up by Government at the expense of the Dacca Municipality for a public purpose, viz., for extension of the Mitford Hospital compound in Babu's Bazar, in the town of Dacca, pargana Jahangirnagar, zilla Dacca, it is hereby declared that for the above purpose a piece of land measuring, more or less, 6 cottahs 16½ dhurs of standard measurement, is required. The land is bounded on the north by Babu's Bazar road, on the south by the house of Babu Jasoda Lal Rai Chowdhury, on the east by the house of Babu Kishori Lal Rai Chowdhury, and on the west by the Mitford Hospital compound.

Dacca.

A plan of the land may be inspected in the office of the Chairman of the Dacca Municipality.

This declaration is made, under the provisions of section 6 of Act I of 1894, to all whom it may concern.

No. 1391T.M.—The 16th July 1902.—Whereas it appears to the Lieutenant-Governor of Bengal that land is required to be taken up by Government at the expense of the Patna Municipality for a public purpose, viz., for widening Chaudhri Tola Lane, in the village of Chaudhri Tola, pargana Azimabad, zilla Patna, it is hereby declared that for the above purpose a piece of land measuring, more or less, 5 chitaks of standard measurement, is required. The land is bounded on the north by the house of Madho Parshad, on the south by the house of Mussamat Makho, widow of Radhe Hajam, on the east by the house of Rup Narain, and on the west by a public road.

Patna.

A plan of the land may be inspected in the office of the Collector of Patna.

This declaration is made, under the provisions of section 6 of Act I of 1894, to all whom it may concern.

No. 1457T.M.—The 19th July 1902.—Whereas it appears to the Lieutenant-Governor of Bengal that land is required to be taken up by Government at the expense of the Dacca Municipality for a public purpose, viz., for widening a lane for a drain in mohalla Bairagitola, in the town of Dacca, in the village of Bairagitola, pargana Jahangirnagar, zilla Dacca, it is hereby declared that for the above purpose a piece of land measuring, more or less, 1 cottah and 5$\frac{1}{16}$ dhurs of standard measurement, is required. The land is bounded on the north by the houses of Rash Behary, Braja Nath Gope and Sidda Bari, on the south and east by narrow lanes, and on the west by sweepers' passage.

Dacca.

A plan of the land may be inspected in the office of the Chairman of Dacca Municipality.

This declaration is made, under the provisions of section 6 of Act I of 1894, to all whom it may concern.

No. 1461T.M.—The 19th July 1902.—Whereas it appears to the Lieutenant-Governor of Bengal that land is required to be taken up by Government at the expense of the District Board of Saran for a public purpose, viz., for Sitalpur Bridge (diversion of road) in the villages of Samerpatte and Sitalpur, pargana Bal, zilla Saran, it is hereby declared that for the above purpose a piece of land measuring, more or less, 4 bighas 10 cottahs and 8 dhurs of Bihar standard measurement, is required. The land is bounded on the north by the fields of Mussamat Kishundar Kuar, Sikander Rai, Ganaur Rai, Soodhram Rai, Mussamat Daulate Kuar, Kishun Prasad Singh and others, on the south by the District Board road and fields of Kishun Prasad Singh, Mussamat Chilua Kuar, Dahaur, Saran Rai, Sookhram, Jodha and Ganaur Rai, Mussamat Daulate Kuar and Mohi River, on the west by the field of Mussamat Kishundar Kuar, and on the east by the zirat land of Setalpur Indigo Concern.

Saran.

A plan of the land may be inspected in the office of the Land Acquisition Deputy Collector, Saran.

This declaration is made, under the provisions of section 6 of Act I of 1894, to all whom it may concern.

No. 1465 T.M.—The 19th July 1902.—Whereas it appears to the Lieutenant-Governor of Bengal that land is required to be taken up by Government at the expense of the Dacca Municipality for a public purpose, viz, for municipal office building at Kalta Bazar, in the town of Dacca, in the village of Kalta Bazar, pargana Jahangirnagar, zilla Dacca, it is hereby declared that for the above purpose a piece of land measuring, more or less, 2 bighas 5 cottahs 11½ dhurs of standard measurement, is required. The land is bounded on the north by the rented house of Wahed Buksha Bepary and the land of Srimati Jagat Sundary Chowdhurany and Babu Nabadip Chandra Basak and Mogtoli Lane, on the south by Lakhi Bazar road, on the east by the rented house of Babu Jagannath Basak and Mogtoli Lane, and on the west by Kalta Bazar Lane.

Dacca

A plan of the land may be inspected in the office of the Dacca Municipality.

This declaration is made, under the provisions of section 6 of Act I of 1894, to all whom it may concern.

No. 1805M.—The 22nd July 1902.—Whereas it appears to the Lieutenant-Governor of Bengal that land is required to be taken up by Government at the expense of the Bhatpara Municipality for a public purpose, viz., for a trenching ground in the village of Kankinara, pargana Habelishahar, zilla 24-Parganas, it is hereby declared that for the above purpose a piece of land measuring, more or less, 12 bighas 12 cottahs of standard measurement, is required. The land is bounded on the north by a kutcha road to Madral, on the south by a pucca road to Narayanpur, on the east by the land occupied by Tinkary Kankray, and on the west by east Goalapara road.

24 Parganas.

A plan of the land may be inspected in the Bhatpara Municipal Office at Kankinara.

This declaration is made, under the provisions of section 6 of Act I of 1894, to all whom it may concern.

No. 1809M.—The 22nd July 1902.—Whereas it appears to the Lieutenant-Governor of Bengal that land is required to be taken up by Government at the expense of the Bankura Municipality for a public purpose, viz., for methers' quarters in the village of Bankura, pargana Vishnupur, zilla Bankura, it is hereby declared that for the above purpose a piece of land measuring, more or less, 1 bigha 4 cottahs and 10 chitaks of standard measurement, is required. The land is bounded on the north and south by Bishu Bagdi's jote land, on the east by old burning-ground road, and on the west by Sarada Pathak and Bishu Bagdi's land.

Bankura.

A plan of the land may be inspected in the office of the Collector of Bankura.

This declaration is made, under the provisions of section 6 of Act I of 1894, to all whom it may concern.

E. W. COLLIN,
Offg. Secy. to the Govt. of Bengal.

The Calcutta Gazette.

WEDNESDAY, JULY 23, 1902.

PART II.

Advertisements.

[N. B.—Advertisements, Notices, &c., intended for insertion in this part of the Gazette cannot be received after Noon on Monday.]

LAND SALE NOTICES.

Advertisement of Sale.

NOTICE is hereby given that the proprietary right of Government, as specified in the conditions of sale below, to the undermentioned estate, situated in the district of Rajshahi, will be put to sale at the Rajshahi Collectorate on the 1st September 1902, corresponding with 16th Bhadra 1309 (B.S.)

The purchaser will be subject to the following conditions of sale:—

Conditions of Sale.

1st.—The estate to be sold to the highest bidder above the upset price, which will be fixed by the Collector at the time of sale. The purchaser of this estate will be considered as the proprietor of the estate, and the entire proprietary right of Government in such estate will be transferred to him, subject to the revenue fixed in perpetuity.

2nd.—The sale to be subject to existing leases and to the rights conferred by the settlement proceedings and by the laws in force, and purchasers to be bound to respect the rights of resident cultivators who have signed the schedule of assessment prepared by the revenue authorities.

3rd.—If the amount of purchase-money do not exceed Rs. 100, the whole amount to be paid down at once.

4th.—If the amount of purchase-money exceed Rs. 100, one-fourth of the amount bid to be immediately deposited. If the balance be not paid by noon of the fifteenth day after the sale, reckoning the day of sale as one, or, if that day be a close holiday, then by noon of the first succeeding office day, the sale is to be cancelled (the sum deposited being forfeited to Government), and the estate to be again put up to sale at the risk of the defaulting purchaser, after issue of advertisement, as in the case of original sale.

Number on the district roll.	Name of estate and pargana.	Approximate area in acres.	Government revenue assessed.	Remarks.
		A. R. P.	Rs. A. P.	
1991	Mauza Bhadum, pargana Mohamanshahi ...	179 3 10$\frac{1}{2}$	357 9 6	

Rajshahi Collectorate, the 16th July 1902.

F. R. Rox, Collector.

Notification of Sale.

NOTICE is hereby given, under sections 6 and 13, Act XI of 1859, read with Act VII (B.C.) of 1868, that the undermentioned tenures or shares of tenures in estate Kothdesh, in the district of Puri, will be put up for sale at the office of the Collector of that district on the 28th July 1902 at 12 A.M. for arrears of revenue and other demands which by above laws are realizable as arrears of land revenue.

N.B.—When in columns 5, 7 and 9 of the appended statement it is stated that only a share is to be sold, it is to be understood that a separate account is kept for that share, and that all other shares besides those specified will be excluded from the sale.

Number of tenure.	Name of tenure, mahal, and pargana.	Sadar jama of whole tenure.		Whether the whole tenure is to be sold.	If only a share is to be sold, specification of such share or shares. All other shares besides that specified are excluded from sale.	Names of proprietors of property to be sold.	If only a share is to be sold, the sadar jama of such share.		If the whole tenure is to be sold, the arrears due from it.		If only a share is to be sold, the arrears due from it.	
		Rent.	Cesses.				Rent.	Cesses.	Rent.	Cesses.	Rent.	Cesses.
1	2	3		4	5	6	7		8		9	
67 68	Mauza Bhairpur Makadami, taluk Kothdesh, thana Pipli, pargana Kothdesh.	Rs. 531	Rs. A. 38 7	The whole	.....	Madhu Nayak and others.	Rs. A. P.	Rs. A. P.	Rs. A. P. 35 5 0	Rs. A. P. 2 5 9	Rs. A. P.	Rs. A. P. .....
86 87	Biswarpur ditto, thana Gope, pargana Antarodh.	631	44 9	Ditto ...	.....	Durgaprasad Bhagat and others.	.....	.....	157 0 0	11 2 3	.....	.....
90 91	Biswanathpur ditto, thana Pipli, pargana Kothdesh.	1,299	85 3	.....	6p. 7g. 1k. 2k. ...	Gadadhar Pani and others.	517 3 8	33 14 10	.....	.....	107 3 4	7 8 2
125 128	Danua, pargana ditto, thana ditto.	1,263	71 15	.....	14p. 15g. ...	Durgaprasad Bhagat and others.	1,164 5 3	66 5 1	.....	.....	45 3 2	4 8 11
141 144	Garadi Punchan, ditto, pargana ditto.	881	52 12	The whole	.....	Chaudhury Krishna Das and others.	.....	.....	137 3 0	8 3 11	.....	.....
158 161	Hansapada, pargana ditto, thana ditto.	1,195	57 12	Ditto ..	.....	Durgaprasad Bhagat and others.	.....	.....	298 0 0	14 7 0	.....	.....
245 253	Nariso ditto, thana Gop, pargana Antarodh.	1,118	86 3	.....	8p. 15g. 1k. 2cd.	Baikuntha Narangi and others.	613 1 0	47 5 2	.....	.....	19 13 0	1 8 6
266 274	Pampalo ditto, thana ditto, pargana Kothdesh.	1,036	66 0	... ..	12p. 2k. 1k. 12b.	Uma Chandrasikhar Das and others.	779 1 5	49 10 5	.....	.....	284 13 8	20 11 3
266 274	Mauza Pampalo Makadami, taluk Kothdesh, thana Pipli, pargana Kothdesh.	1,036	66 0	... ..	3p. 1g. 1k. 1k. 4b.	Sambhunath Das.	198 10 2	12 10 2	.....	.....	99 5 1	6 5 1
291 299	Ratilo, pargana ditto, thana ditto.	921	51 14	.....	12p. 5g.	Durgaprasad Bhagat and others.	705 2 3	39 11 6	.....	.....	176 9 6	9 14 16
315 325	Sarkana ditto, thana ditto, pargana ditto.	1,327	101 2	The whole	.....	Parasuram Mahapatra and others.	.....	.....	345 0 3	26 2 6	.....	.....
321 329	Saulakhal ditto, thana ditto, pargana ditto.	485	34 0	.....	13p. 7d.	Durgaprasad Bhagat and others	394 5 8	27 9 2	.....	.....	33 2 9	7 3 3
334 343	Talatanla ditto, pargana ditto, thana ditto.	534	41 1	.....	3p. 5g.	Keshab Panda and others.	425 8 6	32 11 7	.....	.....	56 14 9	13 11 4
338 346	Tarabni Sasan, pargana ditto, thana ditto.	746	40 6	The whole	.....	Mahant Raghunandan Ramanij Das and others.	.....	.....	23 4 9	1 4 1	.....	.....
346 355	Turuntira ditto, pargana Kalijori.	626	46 6	.....	14p. 2g. 2k. ...	Prasotam Sahoo and others.	552 10 3	37 6 6	.....	.....	276 5 1	18 11 3
73 74	Bhiligram ditto, thana Gop, pargana Antarodh.	632	43 5	.....	2p. 5g. 3k. 12d.	Madhusudan Mahaswar.	89 1 9	6 3 3	.....	.....	44 3 11	3 1 3
277 285	Prataprudrapur ditto, thana Pipli, pargana Kothdesh.	1,446	100 3	.....	7p. 1g. 3k. ...	Mahant Raghunandan Ramanij Das.	640 8 11	44 6 1	.....	.....	.....	1 10 7

Puri Collectorate, the 14th June 1902.

A. GARRETT, Collector.

Notification B.

NOTICE is hereby given, under sections 5 and 13, Act XI of 1859, that unless the arrears mentioned below are paid on or before the next latest date of payment, viz, the 28th June 1902, the undermentioned estates or shares of estates in the district of Tippera will be put up for sale at the office of the Collector of that district on the 26th September 1902 at 12 o'clock for the said arrears.

When in columns 5, 7 and 9 of the appended statement it is stated that only a share is to be sold, it is to be understood that a separate account is kept for that share.

Tauzi No.	Name of mahal and pargana.	Sadar jama of whole estate.	Whether the whole estate is to be sold.	If only a share is to be sold, specification of such share or shares.	Names of proprietors of property to be sold.	If only a share is to be sold, the sadar jama of such share.	If the whole estate is to be sold, the arrears due from it.	If only a share is to be sold, the arrears due from it.	Nature and amount of demand for which to be sold.
1	2	3	4	5	6	7	8	9	10
1925	Pargana Uttar Sahapur chur near Nagarer Kandi, No. 211,	Rs. A. P. 1,296 10 9	Whole ...	.....	Ishan Chandra Datta and others.	Rs. A. P.	Rs. A. P. 202 9 4	Rs. A. P.	Rs. A. P. 202 9 4

Tippera Collectorate the 29th May 1902.

H. W. SCHOOPS, Offg. Collector.

Advertisement of Sale.

NOTICE is hereby given that the undermentioned plots of land, no longer required by Government, situated along the East Coast (now Bengal-Nagpur) Railway, Puri Branch, in the district of Puri, will be put up to sale at 12 o'clock on the 4th day of August 1902, corresponding with the 20th Sraban 1309 Fasli, at the Puri station.

The purchasers of the several plots of land will be subject to the following conditions:—

1st.—The purchasers will have no power to make any excavations on the land nearer than 15 feet from the railway fencing, or plough the lands closer than 3 feet from its foundation.

2nd.—If the amount of purchase-money does not exceed Rs. 100, the whole amount must be paid down at once.

3rd.—If the amount of purchase-money exceed Rs. 100, one-fourth of the amount must be immediately deposited. If the balance be not paid by noon of the fifteenth day after the sale, reckoning the day of sale as one, or if that day be a close holiday, then by noon of the first succeeding office day, the sale shall be cancelled, the sum deposited being forfeited to Government, and the lot again put up for sale at the risk of the defaulting purchaser, after issue of advertisement, as in the case of original sale.

4th.—The plots of land will be sold revenue-free to the highest bidders.

5th.—The purchasers shall be put in possession on receipt by the District Collector of the orders of the Board confirming the sale.

Consecutive lot No.	Name of district.	Pargana and mauza.	Number of mile on which land is situate.	Situated on which side of the railway.	Approximate area of lot in bighas and in acres.		Land excluded from sale from each lot.		Commencement and termination of lot.	Boundary of lot.
					B. K. CH.	A. R. P.	Reasons for exclusion.	A. R. P.		
1	2	3	4	5	6		7		8	9
										(*Lot No. 1.*)
1	Puri ...	Pargana Rahang, ma. Somong.	At mile No 24.	East of the Railway line.	.....	1 3 20	.....	.....	Lot Nos. 1 to 4 ...	*North*—Somong Bharathipur, tanki bajapti land of Hina Biswal. *South*—Kasiharipur. The land to be relinquished in the 25th mile. *East*—Somong Bharathipur, waste land of Bhagban Ramanuj Das and Durga Charan Jagadeb Ray; raiyati land of Apartin Bhoi and lakhraj bajapti land of Balabhadra Prusti and Bhagaban Raiting. *West*—Somong Bharathipur, railway line.
										(*Lot No. 2.*)
2	Do. ...	Ditto ...	Ditto	West of the Railway line.	.....	4 3 18	Required temporarily by P. W. D. for brick-field.	4 3 18	.....	*North*—Somong Bharathipur, lakhraj bajapti land of Ajib Sundra and Dasa Baral and a *jora* (water channel) of Badyanath Brahmachari. *South*—Somong Bharathipur. The land to be relinquished in the 25th mile. *East*—Somong Bharathipur, railway line. *West*—Somong Bharathipur, tanki jagiri land of Mahadeb Mahapatra and Narain Mahapatra; tanki bajapt land of Badyanath Brahmachari and tanki bahal land of Gadadhar Brahmachari.
										(*Lot No. 3.*)
3	Do. ...	Pargana Rahang, ma. Kasiharipur.	At mile No. 25.	East of the Railway line.	.....	3 2 39	.....	.....	.....	*North*—Kasiharipur and Somong Bharathipur. The land to be relinquished in the 25th mile. *South*—Kasiharipur, lakhraj bajapti land of Durga Charan Bharathi. *East*—Kasiharipur embankment, tanki bahal land of Siba Prusti and Durga Charan Bharathi. *West*—Kasiharipur, railway line.
										(*Lot No. 4.*)
4	Do. ...	Ditto ...	Ditto	West of the Railway line.	.....	11 1 24	Required temporarily by P. W. D. for brick-field.	1 1 14	.....	*North*—Somong Bharathipur. The land to be relinquished in the 24th mile. *South*—Kasiharipur, lakhraj bajapti land of Balunkeswar Deb, Siba Prusti and Magund Raut. *East*—Kasiharipur, railway line. *West*—Kasiharipur, raiyati land of Gobind Padhan and Abhi Jena; lakhraj bajapti land of Siba Prusti and Brundu Raut and tanki bahal land of Siba Prusti.
		Total ...	.....	.....	.....	21 3 21	.....	6 0 32		

Puri Collectorate, the 11th June 1902.

A. GARRETT, Collector.

Notification of Sale.

NOTICE is hereby given, under sections 5 and 13, Act XI of 1859, read with Act VII (B C.) of 1868, that unless the arrears mentioned below are paid on or before the next latest date of payment, viz., the 28th April 1902, the undermentioned tenure or shares of tenure in estate Kothdesh, in the district of Puri, will be put up for sale at the office of the Collector of that district on the 28th July 1902 at 12 o'clock noon for the arrear.

When in columns 5, 7 and 9 of the appended statement it is stated that only a share is to be sold, it is to be understood that a separate account is kept for that share, and that the other share or shares in the tenure are excluded from the sale.

No. of tenure.	Name of tenure, mahal and pargana.	Sadar jama of whole tenure.		Whether the whole tenure is to be sold.	If only a share is to be sold, specification of such share or shares. All other shares besides that specified are excluded from sale.	Names of proprietors of property to be sold.	If only a share is to be sold, the sadar jama of such share.		If the whole tenure is to be sold, the arrears due from it.		If only a share is to be sold, the arrears due from it.		Nature and amount of demand for which to be sold.
		Rent.	Cesses.				Rent.	Cesses.	Rent.	Cesses.	Rent.	Cesses.	
1	2	3	4	5	6	7	8	9	10	11	12	13	14
90/91	Mauza Biswanathpur, taluk Kothdesh, thana Pipli, pargana Kothdesh.	Rs. 1,299	Rs. A. 85 3	.....	6p. 7g. 1k. 2kr.	Gadadher Pany and others.	Rs. A. P. 517 3 8	Rs. A. P. 33 14 10	.....	.....	Rs. A. A. 258 9 10	Rs. A. P. 16 15 5	.....

Puri Collectorate, the 17th April 1902.

R. C. BANERJEE, Deputy Collector in charge.

APPENDIX XXX.

Advertisement of Sale.

NOTICE is hereby given that the undermentioned plots of land no longer required by Government, situated along the main line of the East Coast (now Bengal-Nagpur) Railway, in the district of Puri, will be put up to sale at 12 o'clock on 8th day of August 1902, corresponding with the 24th Sraban 1309 Fasli at the Puri station.

The purchasers of the several plots of land will be subject to the following conditions:—

1st.—The purchasers will have no power to make any excavations on the land nearer than 15 feet from the railway fencing, or plough the land closer than three feet from its foundation.

2nd.—If the amount of purchase-money does not exceed Rs. 100, the whole amount must be paid down at once.

3rd.—If the amount of purchase-money exceed Rs. 100, one-fourth of the amount must be immediately deposited. If the balance be not paid by noon of the fifteenth day after the sale, reckoning the day of sale as one, or if that day be a close holiday, then by noon of the first succeeding office day, the sale shall be cancelled, the sum deposited being forfeited to Government, and the lot again put up for sale at the risk of the defaulting purchaser after issue of advertisement as in the case of original sale.

4th.—The plots of land will be sold revenue-free to the highest bidders.

5th.—The purchasers shall be put in possession on receipt by the District Collector of the orders of the Board confirming the sale.

Consecutive lot number.	Name of district.	Pargana and mauza.	Number of mile on which land is situate.	Situated on which side of the Railway.	Approximate area of lot in bighas and acres.		Land excluded from sale from each lot.		Commencement and termination of lot.	Boundary of lot.
					B. K. G.	A. R. P.	Reasons for exclusion.	A. R. P.		
1	2	3	4	5	6		7		8	9
1	Puri ...	Mauza Nayagur, zilla Rameswar, kila Khurda, district Puri.	459	West of the Railway line.	.....	2 0 10	.....	... .	Lots Nos. 1 and 2.	Lot No. 1. *North.*—Markand Patra's garden and Government waste land. *South.*—Mulikhan's garden. *East.*—Cultivated land of Pandab Srichandan and Bhikar Khan. *West.*—Cultivated land of Uzir Khan, Shaik Fakir, and Pandab Srichandan.
2	Do. ...	Mauza Taladihi, zilla Kuhuri, kila Khurda, district Puri.	449	East of the Railway line.	.....	2 0 10	.....	... ..	.	Lot No. 2. *North.*—Chanda Santra's land. *South.*—Road. *East.*—Road. *West.*—Chanda Santra's land.

Puri, the 16th June 1902.

A. GARRETT, Collector.

Notification A.

NOTICE is hereby given, under sections 6 and 13, Act XI of 1859, that the undermentioned estates and shares of estates in the district of Monghyr will be put up for sale at the office of the Collector of that district on the 18th August 1902 at noon for arrears of revenue and other demands which by law are realisable as arrears of land revenue.

When in columns 5, 7 and 9 of the appended statement it is stated that only a share is to be sold, it is to be understood that a separate account is kept for that share.

Mauzi No.	Name of mahal and pargana.	Sadar jama of whole estate.	Whether the whole estate is to be sold.	If only a share is to be sold, specification of such share or shares.	Names of proprietors of property to be sold.	If only a share is to be sold, the sadar jama of such share.	If the whole estate is to be sold, the arrears due from it.	If only a share is to be sold, the arrears due from it.
1	2	3	4	5	6	7	8	9
		Rs. A. P.		*Permanently-settled Estates.*		Rs. A. P.	Rs. A. P.	Rs. A. P.
296	Katri Akhtayar pur, pargana Maldeh.	5,088 15 0	.....	The residuary share in the following mauzas:— A. G. C. B. 1. Katri Akhtayarpur ... ... 1 14 19 3 2. Maldeh Khurd ... ... 1 11 4 3 3. Maldeh buzurg asli main nagdeh, Dayanut, Chak dakhli ... ... 1 11 4 3 4. Sarba buzurg, Sarba khurd and Kalayanpur Sarba asli main Jamalpur, buzurg and Jamalpur khurd dakhli ... ... 1 11 4 3 5. Belao Subhanpur, Belao main Lutfpur and Padumpur and Bhimpur 1 11 4 3 6. Pelari and Mohamedpur Belari ... 1 14 19 3 7. Badi chak dakhli Belari ... .. 1 14 19 3 8. Sindi ... ... 1 14 19 3 9. Kishunpur ... ... 1 14 19 3 All other shares besides that specified above are excluded from the sale	Babu Gopal Lal and others.	612 12 0	.....	35 9 0
537	Shakerpur, pargana Pharkia.	1,036 4 0	Whole ...	.....	Birj Lal Singh and others.	.....	11 3 5	.....
626	Shirnia, pargana Bulia.	1,073 12 0	.....	7a. 0g. 1c. 1k. ijmali share ... ... All other shares besides that specified above and the separate account No. I of Nawab Singh for Rs. 286-6 are excluded from the sale.	Ganga Pershad Sahu and others.	501 1 0	.....	151 11 0
815	Sihanwan Karari, pargana Malki.	1,120 7 0	.....	Ijmali share which cannot be specified excluding the separate accounts— Rs. A. 2. Of Chettru Singh ... ... 112 0 3. ,, Kali Pershad Singh ... ... 213 0 5. ,, Kharag Singh ... ... 5 4 6. ,, Fazal Rahman, *alias* Sageruddin 2 5 7. ,, Gumani Rai ... ... 4 6 8. ,, Mahabir Singh, &c. ... ... 45 9 9. ,, Bhim Singh, &c. ... ... 9 10 10. ,, Sibu Singh, &c. ... ... 74 7 11. ,, Bhagwan Pershad, receiver of the estates of Suja Mahanth ... ... 31 15 12. ,, Khanter Singh, &c. ... ... 26 4 13. ,, Gano Singh, &c. ... ... 79 0 Total ... 602 2 All other shares, besides the ijmali share specified above and separate account No. 6 for Rs. 3-5, and separate account No. 10 for Rs. 74-7, are excluded from sale.	Lil Kanth Chowdhry and Saheb Chowdhry and others.	518 5 0	.....	133 1 6
1072	Baikunthpur, pargana Bhusari.	1,193 3 0	Whole ...	.....	Abunasar Jalaluddin, Manager of Mussamat Girjabati Kumri and others.	.....	17 11 1	.....
1166	Qasba Sheik Dih Haitampur, pargana Masjidpur.	1 026 5 0	.....	Ijmali share consisting of Sheikdih 16a., Hetampur 12a. 5g. All other shares besides that specified above are excluded from sale.	Turant Lal, &c. ...	945 9 0	.....	315 10 0
4420	Diara Gang Barar Sihanwan, pargana Malki.	2,881 8 0	.....	5a. 0g. 12r. ijmali share ... ... All other shares besides that specified above and the separate account No. 6 of Jhaman Singh for Rs. 207-3 are excluded from sale.	Kalli Singh and others.	933 15 0	.....	45 9 6
				Temporarily-settled Estates.				
1324	Tarapur Diar, pargana Monghyr.	13,707 13 0	Whole ...	.....	Mussamat Jainti Kumri, of Uiao, and others.	.....	383 14 0	.....
1438	Bhawanundpur *alias* Ramduri, pargana Malki.	10,630 15 0	Do. ...	.....	Jagatdhar Narayan Parshad, under the guardianship of mother Mussamat Tribeni Kumri.	.....	5,349 8 8	.....
1433	Akbarpur Barari, pargana Malki.	1,596 11 0	Do. ...	.....	Udwant Singh and others.	.....	93 11 6	.....

Monghyr Collectorate, the 12th July 1902.

F. J. JEFFRIES, Offg. Collector.

NOTICE is hereby given, under sections 6 and 13, Act XI of 1859, that the undermentioned estates or shares of estates in the district of Bhagalpur will be put up for sale at the office of the Collector of that district on the 4th August 1902 for arrears of revenue and other demands which by law are realisable as arrears of land revenue.

When in columns 5, 7, and 9 of the appended statement it is stated that only a share is to be sold, it is to be understood that a separate account is kept for that share. All other shares besides that specified will be excluded from the sale.

Tauzi No.	Name of estate, thana or pargana.	Sadar jama of whole estate.	Whether the whole estate is to be sold.	If only a share is to be sold, specification of such share or shares.	Names of proprietors of property to be sold.	If only a share is to be sold, the sadar jama of such share.	If the whole estate is to be sold, the arrears due from it.	If only a share is to be sold, the share due from it.
1	2	3	4	5	6	7	8	9
633	Makrohi, pargana Naredegar, thana Supoul.	Rs. A. P. 3,768 0 0	.....	Residuary ijmali share— A. G. C. KT. Bishenpur ... ... 10 13 1 1 Baldra ... ... 5 6 2 2 Bhurha ... ... 16 0 0 0 Piprasi ... ... } 16 0 0 0 Badai Kalapatti ... } Dubiahi ... ... 11 8 0 0 Debi Patti ... ... 16 0 0 0 Dina Patti ... ... 16 0 0 0 Gamharpur 16 0 0 0	Raja Surendra Narain Singh, &c. Durga Narain Singh. Bishunman Singh, &c. Ditto. Ditto. Rai Babu Narendra Narain Singh, &c. Ditto. Bishunman Singh, &c.	Rs. A. P. 1,520 10 0	.....	Rs. A. P. 32 15 0
8555	Mohanpur Nowhatta, pargana Kahkhand, thana Bongong.	865 12 0	.	Residuary ijmali share— 16 annas Mohanpur Kalan, asli with dakhil, 3a. 3g. 1c. 1kt. in Nowhatta.	Mardan Ali Kha and others.	632 9 0	.....	24 7 0

Bhagalpur Collector's Office, the 3rd July 1902. A MARR, *for* Collector.

Notification A.

NOTICE is hereby given, under sections 6 and 13, Act XI of 1859, that the undermentioned estates and shares of estates in the district of Khulna will be put up for sale at the office of the Collector of that district on the 15th September 1902 at 12 A.M. for arrears of revenue and other demands which by law are realisable as arrears of land revenue.

When in columns 5, 7, and 9 of the appended statement it is stated that only a share is to be sold, it is to be understood that a separate account is kept for that share :—

Tauzi No.	Name of mahal and pargana.	Sadar jama of whole estate.	Whether the whole estate is to be sold.	If only a share is to be sold, specification of such share or shares.	Names of proprietors of property to be sold.	If only a share is to be sold, the sadar jama of such share.	If the whole estate is to be sold, the arrears due from it.	If only a share is to be sold, the arrears due from it.
1	2	3	4	5	6	7	8	9
77	Dhuliapur, pargana Dhuliapur.	Rs. A. P.	No ...	Share No. 1— 5 annas	Promotho Nath Pal Choudhury and others.	Rs. A. P. 5,462 2 9½	Rs. A. P. ...	Rs. A. P. 2,442 15 4½
32	Khalia chuck, pargana Sundarbans.	.....	No ...	Share No. 2— 6 annas	Kamalbasini Dasi and others.	672 2 6	.....	56 8 8

Khulna Collectorate, the 16th July 1902. S. C. MUKERJEE, Collector.

Statement of the Affairs of the Bank of Bengal for the week ending 15th July 1902.

LIABILITIES.

	Rs.	A.	P.
Capital paid up	2,00,00,000	0	0
Reserve Fund	1,14,00,000	0	0
Public Deposits at Head Office ... ... Rs. 1,02,95,443 2 8			
Ditto ditto at Branches „ 1,17,40,504 10 4	2,20,35,947	13	0
Other Deposits at Head Office and Branches...	8,07,35,430	0	8
Bank Post Bills, &c.	3,15,187	10	5
Sundries	14,17,571	6	0
Rupees ...	13,59,04,136	14	1

ASSETS.

	Rs.	A.	P.
Government Securities	1,51,60,213	0	0
Other authorised investments	68,89,100	0	0
Loans on Government and other authorised securities	2,80,97,116	0	5
Accounts of Credit on ditto ditto ...	1,51,95,519	12	11
Bills discounted and purchased	1,93,24,596	9	7
Balances with other Banks	11,25,998	9	10
Bullion	.....		
Dead Stock	16,03,220	1	4
Stamps	13,126	6	1
Sundries	10,61,256	5	2
	8,84,70,146	13	4
Cash and Currency Notes at Head Office* ... ... Rs. 2,26,99,308 15 8			
Cash and Currency Notes at Branches† „ 2,47,34,681 1 1	4,74,33,990	0	9
Rupees ...	13,59,04,136	14	1

* Includes Sovs. & ½ Sovs., value Rs. 83,055 0 0
† Do. do. do. „ 1,04,617 8 0
Rs. 1,87,672 8 0

By order of the Directors,
W. D. CRUICKSHANK,
Secretary and Treasurer.

R. J. BIRCH,
Chief Accountant.

Rate for Demand Loans, 3 per cent.
Percentage 45·38.

BANK OF BENGAL,
Calcutta, the 17th July 1902.

(407—1)

Statement of Government Promissory Notes enfaced for payment of Interest in London, under deduction of amount retransferred to India, and outstanding in the books of the Bank of Bengal on the 15th July 1902.

PARTICULARS.	3 per cent. of 1896-97.	3½ PER CENT. LOANS—							4 PER CENT. LOANS—							4½ PER CENT. LOANS—				GRAND TOTAL.
		Of 1842-43.	Of 1854-55.	Of 1865.	Of 1879.	Of 1893-94.	Of 1900-1901.	Total.	Of 1832-33.	Of 1835-36.	Of 1842-43.	Of 1854-55.	Transfer of 1865.	Reduced 4 per cent. loan of 1879.	Total.	Of 1870.		Transfer loan of 1879, 4½ per cent. portion.	Total.	
Balance of 30th June 1902	1,58,71,900	2,24,36,700	11,75,48,800	3,02,03,700	1,30,27,500	100	10,40,300	18,42,57,100	6,934	5,000	.....	15,500	40,800	5,700	73,934	5,000	...	29,500	34,500	20,02,37,434
ADD—																				
Amount enfaced at Madras up to 10th July 1902 ...	.....	.....	.....	.....	.....	.....	.....	.....	.....	.....	.....	.....	.....	.....	.....	.....	...	.....	.....	.....
Amount enfaced at Bombay up to 11th July 1902	.....	4,000	3,53,000	3,000	5,000	.....	.....	3,65,000	.....	.....	.....	.....	.....	.....	.....	.....	...	.....	.....	3,65,000
Amount enfaced at Calcutta between 1st and 15th July 1902	.....	.....	16,000	.....	.....	.....	10,000	26,000	.....	.....	.....	.....	.....	.....	.....	.....	...	.....	.....	26,000
	1,58,71,900	2,24,40,700	11,79,17,800	3,02,06,700	1,30,32,500	100	10,50,300	18,46,48,100	6,934	5,000	.....	15,500	40,800	5,700	73,934	5,000	...	29,500	34,500	20,06,28,434
DEDUCT—																				
Amount written off in the London registers ...	63,400	1,83,500	8,41,100	23,000	7,500	....	.....	10,55,100	.....	.....	.....	.....	.....	.....	.....	.....	...	.....	.....	11,18,500
Balance on 15th July 1902	1,58,08,500	2,22,57,200	11,70,76,700	3,01,83,700	1,30,25,000	100	10,50,300	18,35,93,000	6,934	5,000	.....	15,500	40,800	5,700	73,934	5,000	...	29,500	34,500	19,95,09,934

NOTE.—From 9th June 1867 to 15th May 1902—Enfaced from India 11,101 lakhs; retransferred from London 10,422 lakhs.
" 16th May 1902 " 31st " " " " " 7 lakhs " " " 15 "
" 1st June " " 15th June " " " " " ... " " " 7 "
" 16th " " " 30th " " " " " 3 lakhs " " " 23 "
" 1st July " " 15th July " " " " " 4 " " " " 11 "
11,115 lakhs 10,476 "
Balance against India 639 "

E. HILDRETH,
Superintendent.

W. D. CRUICKSHANK,
Secretary and Treasurer.

(410—1)

PUBLIC DEBT OFFICE, BANK OF BENGAL;
Calcutta, the 17th July 1902.

Pure Sulphate of Quinine.

MANUFACTURED AT THE BENGAL GOVERNMENT CINCHONA PLANTATION.

FROM 1st April 1902 the price of this quinine will be as follows:—

1	Pound tin	Rs.	17,	or, post free,	Rs.	17-8	
½	,,	,,	8-8	,,	,,	,,	8-14.
¼	,,	,,	4-4	,,	,,	,,	4-10.

Analysis shows this quinine to be of the purest manufacture; and it is guaranteed to be free from wilful mixture with the inferior alkaloids, cinchonine and cinchonidine. It is for sale only to Government officers, and only for cash, and may be had from the Superintendent, Botanic Garden, Sibpur, near Calcutta.

Cinchona Febrifuge.

Cinchona Febrifuge can be purchased by all Government officers and by any one taking *six pounds* and upwards at a time from the Superintendent, Botanic Garden, Calcutta, for cash only at the following rates—

	Government officers.	General public.	Postage extra.
	Rs. A.	Rs.	As.
1 Pound tin ...	10 0	12	8
½ ,, ,, ...	5 0	6	6
¼ ,, ,, ...	2 8	3	4

RAJENDRA CHANDRA CHUCKERBUTTY, B.L. intends to be enrolled as a Vakil, High Court. (368—4—919)

LALIT MOHAN GHOSE, M.A., B.L., intends to be enrolled as a Vakil of the High Court, Calcutta. (367—4—918)

BABU NIKHIL NATH ROY, B.L., Pleader, District Judge's Court, Murshidabad, intends to be enrolled as Vakil, Calcutta High Court. (322—4—893)

Wanted

BY the District Board of Muzaffarpur a Sub-Inspector of Schools on a monthly salary of Rs 50, exclusive of travelling allowance, not exceeding Rs. 360 a year, admissible under the Civil Service Regulations. Only candidates qualified under Government Notifications Nos. 486T —G., 105T.—G., and 658, dated the 2nd September 1893, 24th May 1899, and 8th February 1901, respectively, need apply. Applications with copies of the requisite certificates will be received by the undersigned up to 30th July 1902. The selected candidate will be on probation for six months.

E. V. LEVINGE, Chairman, District Board

Muzaffarpur District Board's Office, the 8th July 1902. (375—2)

Wanted

A SUB-INSPECTOR OF SCHOOLS under the District Board of Midnapore on a salary of Rs. 50 a month besides travelling allowance.

Applicants must be qualified under the rules prescribed by the Government of Bengal in Notification No. 486T.G., dated the 2nd September 1893.

Applications with copies of testimonials will be received by the undersigned up to the 26th instant.

H. LUSON, Chairman.

District Board, Midnapore, the 12th July 1902. (380—2)

WANTED a Draughtsman for about three months at Chaibassa, Singhbhum District. Pay Rs 30 per month. Apply at once with copies of testimonials to the undersigned.

H. H. HAINES,

Deputy Conservator of Forests,
Singhbhum Division, Chaibassa.

WANTED for three months an experienced Overseer for the Rampur Boalia Municipality on a salary of Rs. 50 and a horse allowance of Rs. 10 per month. Applications will be received up to 27th instant.

R. C. ROY, Vice-Chairman.

Rampur Boalia Municipality, the 10th July 1902. (381—2)

Wanted.

AN Estimator is required for the office of the Executive Engineer, Mahanadi Division, Cuttack. He must be a good Draftsman and Tracer. He must also have a certain amount of knowledge of how to work out calculations for the scantlings of roof timbers, size of joists and Ts for terraced roofs, &c., and be able to make finished drawings from pencil sketches and the instruction given. When not employed in drawing or estimating he will be required to perform the duties of an ordinary clerk in an Executive Engineer's office. The man appointed will be on probation for six months. A candidate who has gone through the Sibpur Course preferred. The post is a permanent one. The salary Rs. 60 a month rising by yearly increments of Rs 4, on approved service, to Rs. 80. Applications, with certified copies of testimonials, or the originals, should be addressed to the Executive Engineer, Mahanadi Division, Cuttack.

Notice.

WANTED at once a Muhammadan teacher for a Government Zilla School on Rs. 20 a month. None need apply who has not at least passed the Entrance Examination and has not fair knowledge in Bengali.

RADHA NATH RAI,

Inspector of Schools, Burdwan Division.

Chinsurah, the 4th July 1902.

Notice.

WANTED from about 1st December 1902 for the Hooghly Collectorate a Sharistadar on a monthly salary of Rs. 120 rising to Rs. 200 by a biennial increment of Rs 8.

None without previous experience need apply. Applications stating nature of experience and accompanied by copies of testimonials should reach the Collector not later than the 30th September.

R. C. HAMILTON, Collector.

Hooghly Collectorate, the 10th July 1902.

Notice.

WANTED a District Engineer for the Hazaribagh District Board on a monthly salary of Rs. 200—20—300 and a travelling allowance at the rate of 8 annas per mile when travelling more than 20 miles a day and Rs. 3 halting allowance per diem. No one need apply who is not qualified under Bengal Government Notification No. 3384L S.-G., dated 20th December 1900, published in the *Calcutta Gazette* of the 26th December 1901. Applications should be submitted in sealed and registered covers to the address of Chairman, District Board, and superscribed "Applications for the post of District Engineer," and must be accompanied by all the necessary certificates and testimonials.

Applications will be received up to 31st August 1902.

S. KARAM HOSSAIN, Vice-Chairman.

Hazaribagh, the 14th July 1902. (408—2)

Notice.

THE Calcutta Training School, together with the Model School attached to it, will be removed from No. 68 Nimtola Ghat Street to No. 28 Convent Road, Entally, Calcutta, on the 1st August 1902.

P. MUKERJI, Offg. Inspector of Schools,
Presidency Division.

Calcutta, the 16th July 1902.

Notice.

WANTED a District Engineer for the District Board of Bogra on a salary of Rs. 200 a month rising to Rs. 300 by an annual increment of Rs. 20.

2. None need apply who is not qualified under the rules issued in Government Notification No. 3334L.S.-G., dated 20th December 1901.

3. All applications from intending candidates shall be submitted in sealed and registered covers addressed to the Chairman of the Bogra District Board and superscribed "Application for appointment of District Engineer." Each application must be accompanied by all the necessary certificates and testimonials required by the rules issued in the said Resolution, together with a suitable envelope addressed and sufficiently stamped for registration, in which they can be returned in the event of the application being unsuccessful.

4. Applications will be received by the undersigned up to the 10th August 1902.

R. KRISHNA, Chairman.

Bogra, the 19th July 1902. (419—3)

Notice.

IN continuation of this office notice dated 12th March 1902, published in the *Calcutta Gazette* of the 19th March 1902, Part II, page 314, it is hereby notified for general information, under section 33 of Act IV (B.C.) of 1887, the following rates will be charged for hire of the cranes at the Chittagong Jetties for day and night work:—

Rules and rates for day work.

It is optional with a vessel whether she uses her own or the jetty cranes. If she uses the latter, the charges will be as follows:—

	Rs.	A.
For each 35-cwt. crane per day ...	5	0
Ditto 35 ,, ,, per half day	2	8
Ditto 5-ton ,, per day ...	10	0
Ditto 5 ,, ,, per half day	5	0

(2) Day to be from 6 A.M. to 6 P.M.; half day to be from 6 A.M. to noon or noon to 6 P.M.

(3) Any part of a day less than a half will be charged as a half day.

(4) On a ship applying for cranes, if they are supplied, payment must be made for at least half-a-day whether they are used or not.

(5) Should the application have been for the first half only of a day and the crane be required for a longer time, another application must be made through the Jetty Superintendent at least one hour before the expiration of the first half of the day.

(6) Application for cranes required for the whole or half of the following day to be made by 4 P.M. to the Jetty Superintendent.

(7) Should cranes for which application has been made for the whole day not be required for more than the first half day, written notice must be given to the Jetty Superintendent at least one hour previous to the end of the half day, or full day will be charged for.

(8) All applications for cranes to be in regular book forms with counterfoils, and to be signed by the ship's officer on duty, showing number of cranes required, from what time and for how long.

For night work.

Vessels berthed alongside the jetty when working at night shall pay the following charges, which include use of cranes, electric light on jetty and in vessel's holds as far as available—

	Rs.
From 7 P.M. to 1 A.M.	100
For any time in excess of the above six hours up to 6 A.M.	50

R. S. GREENSHIELDS,
Chairman, Port Commissioners.

Chittagong, the 27th June 1902. (344—3)

HARI CHARAN BOSE, M.A., B.L., intends to be enrolled as a Vakil of the High Court, Calcutta.

(376—4—939)

Chota Nagpur Tea Company, Limited.

NOTICE is hereby given that at Extraordinary General Meetings of the Shareholders of the Chota Nagpur Tea Company, Limited, held at the Registered Office of the Company, No. 20 Strand Road, Calcutta, on the 11th day of June 1902 and the 4th day of July 1902, respectively, the following special resolutions were passed:—

1. That the Company be wound up voluntarily, and that Mr. Gerald Kingsley, of 20 Strand Road, Calcutta, be and he is hereby appointed Liquidator for the purpose of such winding up.

2. That the said Liquidator be and he is hereby authorised, pursuant to section 204 of the Indian Companies Act, 1882, to sell to the Assam Frontier Tea Company, Limited, all the lands, tea estates and other property of the Company, together with all assets of the Company (save cash in hand, the proceeds of the 1901 crop, recoverable outstandings, and new and unissued stores) as on and from the 1st day of January 1902, at the price of £5,000, to be paid and satisfied in fully paid £10 preference and ordinary shares of the said Assam Frontier Tea Company, Limited, the said shares to be allotted to the Shareholders of this Company on the basis of one preference and one ordinary share for every three shares held by them in this Company, and so that in the case of odd shares for which the allotment cannot be made the Liquidator shall be at liberty to sell the same at the price of Rs. 80 each, to enter into all necessary contracts and deeds for effecting and completing the said sale and transfer upon such terms and conditions and generally in such manner as to the Liquidator may seem fit.

3. That the remuneration of the said Liquidator in the said winding up be the sum of Rs. 250.

SHAW, WALLACE & Co., Managing Agents.

Calcutta, the 4th July 1902. (351—2—922)

Currency Notes.

THE following Currency Notes of the Calcutta Circle are stated to have been destroyed, and payment of their value has been claimed by the person whose name is placed against the numbers. Any other person claiming a right to them is warned to communicate at once with the undersigned:—

Notes wholly lost.

Register No.	No. of Notes.	Value.	Name of claimant.
	O/97 60746	Rs. 100	
	,, 42420	100	
	,, 58097	100	
W334 of 1881	,, 56116	100	Nocoor Krishna Mukerjee, Jansi, Serampore.
	,, 54809	100	
	,, 56115	100	
	,, 35939	100	
	,, 29724	100	
	,, 29725	100	
	,, 11833	100	

FRED. BREWIN, Assistant Comptroller-General, in charge Paper Currency.

Paper Currency Office, the 12th July 1902.

Howrah Mills Company, Limited.

NOTICE is hereby given that the Twenty-fourth Half-yearly Ordinary General Meeting of Shareholders will be held at the Registered Office of the Company, No. 9 Clive Row, Calcutta, on Friday, the 25th July 1902, at 12-45 P.M., to receive the Directors' Report, pass the audited accounts to 30th June 1902, declare a dividend and transact any other business that may be brought forward.

Dividend warrants will be made out in favour of Shareholders whose names are in the Company's books on the 10th July 1902.

The Share Transfer Register of the Company will be closed from Friday, the 11th, to Friday, the 25th July 1902, both days inclusive.

By order of the Directors,

ERNSTHAUSEN LD.,
Managing Agents.

Calcutta, the 4th July 1902. (350—3—912)

Notification of Sale.

ESTATE NISTARINI DASSEE.

Peary Lall Maitra *versus* Gopal Chunder Chatterjee.

TO be sold by the Official Receiver of the High Court as Receiver of the estate of Nistarini Dassee, deceased, at the hour of 1 o'clock at noon, on Saturday, the 9th day of August next, at his office on the third floor of the High Court building, pursuant to an order of the said High Court made in this suit and dated the 27th day of August, the undermentioned landed properties:—

Re *premises No. 28 Durga Charun Mitter's Street.*

All that three-storied brick built messuage, tenement or dwelling-house, land, hereditaments, and premises, together with the piece and parcel of land whereon the same is efected and built, containing by estimation 1¼ chitaks, more or less, situate, lying, being at and numbered 28 Durga Charun Mitter's Street, in the town of Calcutta, and butted and bounded on the north by Durga Charun Mitter's Street, on the east by a common pathway, on the south by 28-1 Durga Charun Mitter's Street (property of Beni Madhub Baisack), and on the west by 27 Durga Charun Mitter's Street (the house of Nemai Chund Dutt and Brothers) howsoever, otherwise the same is or at any time heretofore was butted, bounded known or described.

Re *permises No. 25 Brindabun Bysack's Street.*

All that two-storied brick-built messuage, tenement dwelling-house, hereditaments and premises, together with the land whereon the same is erected and built, containing by estimation 1 cottah 1 chitak and 2 kanchas, more or less, situate, lying and being at and numbered 25 Brindabun Bysack's Street, Sootanoty, in the northern division of the town of Calcutta, and butted and bounded on the north by the privy and compound wall, municipal drain, filled-up lane, on the south by Brindabun Bysack's Street, on the east by the premises No. 24 Brindabun Bysack's Street, dwelling-house of Gopal Chunder Dass, and on the west by No. 26, Brindabun Bysack's Street, the dwelling-house of Panchanun Bhur or howsoever, otherwise the said house, land, hereditaments, and premises or any part thereof now are or is or heretofore were or was situated, bounded, called, known, numbered, described or distinguished.

Re *premises No. 9 Ahiretolla Street.*

All that three-storied brick-built messuage, tenement, dwelling-house, hereditaments, and premises, together with the rent-free land whereon the same is erected and built, containing by estimation 1 cottah, more or less, situate, lying, and being at and numbered 9 Ahiretollah Street, Sootanooty, in the northern division of the town of Calcutta, and butted and bounded on the north by Ahiretolla Street, on the south by No. 7 bustee in Durmahatta Street, a municipal drain and the raiyati land of Hubu Dutt, on the east formerly by the land of Juggo Mohun Mookerjee and now by a filled-up drain, and on the west formerly by No. 8 Durmahatta Street, the land of Gocool Chandra Dutt, and now by the tenanted house belonging to Chandra Mullick or howsoever, otherwise the said house, land, hereditaments and premises or any part thereof now are or is or heretofore were or was situated, bounded, called, known, numbered, described or distinguished.

Re *premises Nos. 4 and 4-1 Dhania Bagan Road.*

All that two-storied brick-built messuage, tenement or dwelling house, land, hereditaments and premises, together with the land appertaining thereto and containing by estimation 1 cottah 11 chitaks, more or less, which is bounded on the north by No. 6 Dhania Bagan or Nikaseepara Lane, the dwelling house and land of Raj Chandra Dass Boiragee, on the east by Nikaseepara, Lane, a municipal lane, on the west by the dwelling-house of Moti Bibee Nikaree, and on the south partly by Nikaseepara Lane, a public lane, and partly by the passage leading to the said house and that of Moti Bibee Nikaree, and which said premises form part of the piece or parcel of land contained in tauzi No. 298, division No. 2, subdivision No. 12, in mauza Goureebara, in Nikaseepara, at Shambazar, in thana Ultadighee, sub-registration district of Sealdah, and holding No. 97—44, and premises Nos. 4 and 4-1 Dhania Bagan Road, in the district of the 24-Parganas.

The conditions of sale can be seen at the office of the said Receiver and also at the office of Babu Navadwip Chandra Roy any time before the sale and will be produced at the sale.

C. E. GREY, Offg. Official Receiver, High Court.

High Court, Receiver's Office, the 8th July 1902.

(369—4)

Notification.

IT is notified that the Mandal Estate, Balasore, will not be responsible for debts contracted by Babus Birendra Coomar Mandal and Hemendra Coomar Mandal, of Chinsurah and Balasore, without the sanction of the District Judge of Cuttack, from 20th October 1901, the date on which the Common Manager took over charge.

By order,

J. N. DUTT, Common Manager.

Balasore, the 6th July 1902. (370—3)

NOTIFICATION.

Treasure Trove.

IT is hereby notified, under section 5 of the Indian Treasure Trove Act VI of 1878, that on the 15th June 1902 a treasure, consisting of the articles enumerated below, valued at about Rs. 125 1, was found near the house of Balakrishna Pillai, residing in Perumal Coil Street, Fort, Coimbatore town.

2. All persons claiming the said treasure or any part thereof are hereby required to appear personally or by agent before the Collector of Coimbatore on Monday, the 15th December 1902, at Coimbatore, in order that the matter may be enquired into and determined by the Collector according to law.

	Weight.	Estimated price. Rs. A.
(1) Varadaraja Perumal	2,350	35 0
(2) Nocharammak	840	12 0
(3) Ditto	860	12 0
(4) Srinivasa Murthi ...	1,540	17 0
(5) Ditto small ...	305	4 0
(6) Venkatar amanasawami ...	260	4 0
(7) Ditto	250	4 0
(8) Krishnaswami	700	8 0
(9) Ditto	540	6 0
(10) Lakshminarayanaswami with two Nachars	50	1 0
(11) Anjanayar	550	6 0
(12) A bell	285	4 0
(13) Do. small	138	3 0
(14) Incense stand (Thupakkal) ...	35	1 0
(15) Tripod (big)	135	1 0
(16) Do. (small)	22	1 0
(17 to 21) Tripods (5 in No.)	35	1 0
(22) Water-jug	170	2 0
(23) Vessel for holding water .	70	1 0
(24) Sandals (broken) .. .	11	0 1
(25) Pralavali or ornamental arch	85	1 0
(26 and 27) Stands	185	1 0

A. EDGINGTON, Acting Collector.

Coimbatore Collector's Office, the 10th July 1902.

Public Works Department.

NOTICE.

TENDERS, to be opened on Monday, the 28th July 1902, are invited in Public Works Department Form F for supplying and filling earth in a tank and certain low lands in the compound of the Veterinary College, Belgachia.

The approximate quantity of earth required is 4½ lakhs cubic feet

Each tender should be accompanied by Rs. 100 as earnest-money.

Each tenderer should state the time within which he will complete the work.

The tenderer whose tender is accepted will have to deposit 10 per cent. of the tendered amount, which will be returned to him on completion of the work to the satisfaction of the Executive Engineer, 1st Calcutta Division.

All information as to exact site of the work may be obtained from the Assistant Principal of the College.

The Superintendent does not bind himself to accept the highest or any tender.

F. RAYMOND, Vety.-Major,

Supdt., Civil Veterinary Dept., Bengal.

Belgachia, the 16th July 1902.

Supply and Transport Notice No. 3.

Dated 18th July 1902.

THE Storekeeper-General, Supply and Transport, Balooghat, Calcutta, will receive offers by letters for supply of the undermentioned articles up to 12 noon, the 29th day of July 1902, deliverable in two equal instalments on 15th August 1902 and 15th January 1903, at his Store Depôt or any head-quarter station of a Chief Supply and Transport Officer.

2. The successful tenderer will have to sign a simple agreement in $\frac{\text{S. and T. Form}}{\text{F. 45}}$, which form and any further particulars can be obtained on application to the above officer.

Names of articles.

(1) 195 Pugries of khaki colour, country cloth, 9 yards by 2 feet, weight 1 lb. 8 oz., with piece of red cloth sewn on at one end, for transport supervising establishments.

(2) 1,362 Pugries of khaki colour, country cloth, 9 yards by 2 feet, weight 1 lb. 8 oz., for followers, both according to samples.

Notice.

PURSUANT to a decree of the High Court of Judicature at Fort William in Bengal in its Ordinary Original Civil Jurisdiction made in suit No. 492 of 1900, wherein Fanindra Kumar Mitter is plaintiff and the Administrator-General of Bengal and others are defendants, and dated the 25th day of November 1901, the creditors of Khetter Money Dutt, late of No. 12 Manicktolla Street, in the town of Calcutta, a Native Christian convert, who died on the 22nd day of January 1899, are, on or before Wednesday, the 20th day of August 1902, required to send to the office of the Registrar of this Court in its Original Side their names, addresses, and descriptions, the full particulars of their claims, a statement of their accounts and the nature of the securities (if any) held by them, or in default thereof they will be peremptorily excluded from the benefit of the said decree. Every creditor holding any security may produce or transmit the same to the Registrar with the particulars of his claim, or shall produce the same before the Registrar in the Court-house on Wednesday, the 27th day of August next, at 12 o'clock noon, being the time appointed for adjudicating on the claims, and in default thereof they will be precluded from the benefit of the said decree.

W. R. FINK, Registrar.

N. C. Bose, Attorney for the plaintiff.

High Court, Original Jurisdiction, the 4th July 1902.

(379—1—973)

In the matter of the Samanbagh Tea Company, Limited.

AT an Extraordinary General Meeting of the Members of the abovenamed Company duly convened and held at No. 20 Strand Road, Calcutta, on the 16th day of July 1902, the following extraordinary resolution was duly passed:—

"That it has been proved to the satisfaction of this Meeting that the Company cannot, by reason of its liabilities, continue its business, and that it is advisable to wind up the same, and accordingly that the Company be wound up voluntarily."

And at the same Meeting Mr. Gerald Kingsley and Mr. George Laurens LeSueur, of No. 20 Strand Road, aforesaid, were appointed liquidators of the said Company with joint and several powers for the purpose of such winding up.

H. S. ASHTON, Chairman.

Dated 17th July 1902. (412—1—974)

BABU NARENDRA LAL DEY, M.A., B.L., intends to enrol as a Vakil of the High Court, Calcutta.

(431—4—980)

In the matter of the Dessai and Parbuttia Tea Co., Ld.

AT an Extraordinary General Meeting of the abovenamed Company duly convened and held at No. 100 Clive Street, Calcutta, on the 17th day of June 1902, the following special resolutions were duly passed, and at a subsequent Extraordinary General Meeting of the Members of the said Company also duly convened and held at the same place on the 15th day of July 1902, the following resolutions were duly confirmed, viz.—

(1) That it is desirable to reconstruct the Company, and accordingly that the Company be wound up voluntarily, and that Mr. H. T. Peter, of 100 Clive Street, be and he is hereby appointed Liquidator for the purposes of such winding up.

(2) That the said Liquidator be and he is hereby authorised to consent to the registration of a new Company, to be named The Dessai and Parbuttia Tea Company, Limited, with a Memorandum and Articles of Association which have already been prepared with the privity and approval of the Directors of this Company.

(3) That the Draft Agreement submitted to this Meeting and expressed to be made between this Company and its Liquidator of the one part and the said new Company of the other part be and the same is hereby approved, and that the said Liquidator be and he is hereby authorised, pursuant to section 204 of the Indian Companies Act, 1882, to enter into an agreement with such new Company (when incorporated) in the terms of the said draft and to carry the same into effect with such, if any, modifications as he may think expedient.

J. D. WEST, Chairman.

Dated 17th July 1902. (418—1—975)

Notification.

TO be peremptorily sold, pursuant to the decree and order of the Calcutta High Court, made in suit No. 212 of 1900 (Amrita Lal Ghose *versus* Sheik Chuni *alias* Abdul Hai), and dated, respectively, the 12th day of March 1901 and the 11th day of March 1902, by the Registrar of the said Court, Original Jurisdiction, in his sale-room in the Court-house on Saturday, 30th August 1902, at 12 o'clock noon, the defendant's undivided one-tenth share of and in the following premises:—

The kheraji land, being premises No 23 Maulvi Imdad Ally's Lane, in Block No. III, Holding No. 157, in the Southern Division of the town of Calcutta, Taltolla thana, and paying an annual Government revenue of Rs 2-1-1½ and divided into two lots as under:—

1. All that piece or parcel of tenanted bustee land containing by actual measurement an area of 4 cottahs 14 chitaks 18 square feet, and butted and bounded in the manner following, that is to say, on the north by the tenanted land of Jadu Nath Sarkar, on the south by a Municipal pucca drain, on the east by the tenanted land of Jadu Nath Sarkar, and on the west by premises No. 20 Maulvi Imdad Ally's Lane, the property of Munshi Alecmuddin.

2. All that piece or parcel of tenanted land containing by actual measurement 4 cottahs 12 chitaks 6 square feet, and butted and bounded in the manner following, that is to say, on the north by the said Municipal pucca drain, on the east by the tenanted land of Jadu Nath Sarkar on the south partly by the tenanted land of Jadu Nath Sarkar and partly by a Municipal drain, and on the west partly by premises No. 21 Maulvi Imdad Ally's Lane, formerly belonging to Mayer Sarung, but now belonging to Chotalal Johury, of Barabazar, Calcutta, and partly by a Municipal pucca drain.

The abstract of title and conditions of sale may be seen at the office of the Registrar, or at the office of Babu Hirendra Nath Dutta, Attorney for the plaintiff, at No. 8 Old Post Office Street, Calcutta, on any day before the sale and will be produced at the sale.

W. R. FINK, Registrar.

Hirendra Nath Dutta, Attorney for the Plaintiff.

High Court, Original Side, the 9th day of July 1902.

(404—1—978)

Notification.

TO be peremptorily sold, pursuant to the decree and an order of the Calcutta High Court, Ordinary Original Civil Jurisdiction, in suit No. 397 of 1897 (wherein P. L. Roy and another are plaintiffs and Anupam Chunder Paul and others are defendants), and dated, respectively, the 31st day of August 1897 and the 13th day of March 1899, by the Registrar at his sale-room in the Court-house on Saturday, the 30th day of August 1902, at 12 o'clock noon, the following property :—

Lot I.—A piece of tenanted land and garden containing by estimation 13 cottahs out of a piece of land or ground containing by estimation 1 bigha and 4 cottahs, more or less, formerly No. 13 Fakeer Chand Mittor's Street and 1-1 Brindabun Mullick's Lane, being Block No. 13, Holding No. 106, and paying a revenue of rupees three, annas thirteen and pies four to the Collector of Calcutta. The entire piece of 1 bigha 4 cottahs is bounded as follows :—On the south by Fakeer Chand Mitter's Street, on the east by the house and premises No. 12 Fakeer Chand Mitter's Street, belonging to Babu Dwarka Nath Dutt, on the north by the family dwelling-house of Gopal Chunder Dutt, and on the west by Brindabun Mullick's Lane, and the portion which is now being sold is the residue of the said 1 bigha 4 cottahs other than the portion of 12 cottahs with buildings sold on the 24th February 1900 by the Registrar of the High Court of Judicature at Fort William in Bengal, Original Side, in suit No. 611 of 1892 of the said Court.

The abstract of title and conditions of sale may be seen at the Office of the Registrar, High Court, Original Side, or at No 4 Strand, the office of Babu Rajmohun Dass, Attorney for the plaintiffs, on any day before the sale, and will be produced at the sale.

W. R. FINK, Registrar.

Rajmohun Dass, plaintiff's Attorney.

No. 4 Strand, Calcutta, dated the 9th day of July 1902. (381—1—972)

Notification.

TO be peremptorily sold, pursuant to the decree and order of the Calcutta High Court, made in suit No. 552 of 1900 (Juggut Chunder Kundoo and others *versus* Bollye Chunder Gossami and others), and dated, respectively, the 6th September 1900 and 21st December 1901, by the Registrar of the said Court in his sale-room in the Court-house on Saturday, the 2nd August 1902, at 12 o'clock noon, the following property :—

I —The undivided one equal third part or share of the defendants, Bollye Chunder Gossami and Kissore Chunder Gossami, in No. 43 Nundoram Sen's Street, in Sootanooty, in Calcutta, an upper-roomed brick-built messuage or dwelling-house, together with the piece or parcel of land thereunto belonging, containing by estimation 1 bigha and 3 cottahs, a little more or less, and bounded on the north by Nundoram Sen's Street, on the east by Gouriprosad Moietri's dwelling-house, on the south by Ramkristo Pattak's tenanted land, and on the west by Nundoram Sen's bye-lane.

This sale is subject to the maintenance and right of residence of Sreemutty Neerudasoondery Dabee, the mother of the said defendants, upon the whole of the said premises No. 43 Nundoram Sen's Street, and as regards the undivided one-sixth share of the defendant Bollye Chunder Gossami in the said premises, subject also to a prior mortgage executed by him in favour of Sarat Chunder Shaw Chowdoory on the 20th September 1897 for Rs. 635, with interest at the rate of 24 per cent. per annum with monthly rests which has been subsequently assigned to Mocoondo Lal Coondoo.

The abstract of title and conditions of sale may be seen at the office of the said Registrar or at No. 2 Hastings Street, the office of Babu Aushootoss Dhur, Attorney-at-Law, on any day before the sale and will be produced at the sale.

W. R. FINK, Registrar.

A. T. Dhur, Plaintiffs' Attorney.

No. 2, Hastings Street.

High Court, Original Side, the 11th June 1902.

(323—1—970)

Notification.

TO be peremptorily sold, pursuant to a decree and an order of the Calcutta High Court, dated, respectively, the 18th day of February 1901 and the 3rd day of April 1902, in suit No. 851 of 1900 (Kally Prosanno Ghose *versus* Gopal Chunder Dutt), by the Registrar in his sale-room on Saturday, the 23rd day of August 1902, at 12 o'clock noon, the following property :—

Lot I.—No. 90 Grey Street in Sootanooty in the North Division of Calcutta, a two-storied brick-built house with land containing, according to the instrument of mortgage, about 4 cottahs 10 chitaks 29 square feet, more or less, but found on actual measurement to contain 5 cottahs 2 chitaks and 26 square feet, and bounded on the north by the tenanted land and garden of Chandra Nath Bose, on the south by Grey Street, on the east by a filled up Municipal drain, and on the west by the dwelling-house of Madhub Chunder Dey.

The abstract of title and conditions of sale may be seen at the Office of the said Registrar, or at the Office of Mr J. C Dutt at No. 8 Old Post Office Street, Calcutta, on any day before the sale, and will be produced at the sale.

W. R. FINK, Registrar.

J. C. Dutt, plaintiff's Attorney.

The 7th day of July 1902. (373—1—942)

Notification.

TO be peremptorily sold, pursuant to a decree and an order of the Calcutta High Court in its Ordinary Original Civil Jurisdiction made in suit No. 123 of 1896 (wherein Nobodwip Chunder Chowdhury is the plaintiff and Netai Churn Sen and others are defendants), and dated, respectively, the 4th day of September 1896 and the 25th day of June 1901, by the Registrar of the said Court in his sale-room in the Court-house on Saturday, the 2nd day of August 1902, at the hour of 12 o'clock noon, the undermentioned properties belonging to the defendant Netai Churn Sen :—

Lot No. I—All that undivided 2 annas 19 gandas 1 kora and ½rd duntoo share of and in the premises Nos. 91, 91-1 and 92 Durga Churn Mitter's Street, in Sootanutty, in the town of Calcutta, containing by estimation 7 bighas and 8 cottahs of land, be the same a little more or less, and bounded on the north partly by Gooloo Ostagar's Lane, partly by the houses of Koosoom Moni and Rudra Laha, partly by the land of Johuree Lall Roy, partly by the tenanted land of Poddo Moni Dassee, partly by a passage over a filled up Municipal drain, partly by Dewan's Lane, and partly by Nunda Lall Sen's house, on the south by Durga Churn Mitter's Street, on the east partly by Durga Churn Mitter's Street and partly by Gooloo Ostagar's Lane, and on the west partly by Durga Churn Mitter's Street and partly by Dewan's Lane.

Lot No. II.—All that the undivided one-third part or share of and in the tenanted house and premises Nos. 3 and 3-1 Waterloo Street in the town of Calcutta, together with the piece or parcel of land thereunto belonging, containing by estimation 1 bigha, be the same a little more or less, and bounded on the north by Waterloo Street, on the south by the stable house of Behari Lall Bose, on the east by tenanted house of Ram Dass Sen, and on the west by the tenanted house of Hari Das Sen, otherwise called Srivan Behary Sen.

The abstract of title and conditions of sale may be seen at the office of the Registrar, High Court, Original Side, and at the office of Babu Kamini Kumar Guha, at No. 11 Old Post Office Street, Calcutta, on any day previous to the sale and will be produced at the sale.

W. R. FINK, Registrar.

K. K. Guha, Attorney for the plaintiff.

Calcutta High Court, Ordinary Original Civil Jurisdiction, the 11th day of June 1902. (422—1—977)

Notice.

THE Directors have appointed Mr. C. W. W. Carbery to act as Agent at Agra, during the temporary absence of Mr C. H. M. Critchley, on short leave, with effect from the 27th instant.

By order of the Directors,

W. D. CRUICKSHANK,
Secretary and Treasurer.

Bank of Bengal, Calcutta, the 21st July 1902

(427—1)

Notification.

TO be peremptorily sold pursuant to a decree and an order of the Calcutta High Court in its Ordinary Original Civil Jurisdiction made in suit No. 166 of 1899 (wherein Horendra Lal Roy is the plaintiff and Hadjee Syed Jaun is the defendant), and dated, respectively, the 13th day of July 1899 and 18th day of July 1900, by the Registrar of the said Court, in his sale-room in the Court-house on Saturday, the 2nd day of August, at the hour of 12 o'clock, noon, the undermentioned properties belonging to the defendant :—

Lot No. 1.—No. 30, Imambari Lane, in the town of Calcutta, being a one-storied brick-built messuage, tenement or dwelling-house and hereditaments, together with the piece or parcel of land thereunto belonging and on part whereof the same is erected and built, containing according to the pottah granted by the Collectorate of Calcutta 15 cottahs 9 chittaks and 2 square feet, but found on actual measurement to be 13 cottahs 9 chittacks and 35 square feet, be the same a little more or less, situate, lying, and being in holding No. 109 and block No. 16 in the South Division and paying an annual Government revenue of rupees 2, 14 annas and 4 pies to the Collectorate of Calcutta, and bounded on the north partly by the said Imambari Lane and partly by the premises Nos. 28 and 29, Imambari Lane; on the south by a filled-up municipal drain; on the west by another filled-up drain; on the east partly by Imambari Lane and partly by premises No. 31, Imambari Lane.

Lot No. 2.—Premises Nos. 25 and 27, Imambari Lane, being a one-storied brick-built messuage, tenement or dwelling-house and hereditaments, together with the piece of land thereunto belonging and on part whereof the same is erected and built, containing according to the pottah granted by the Collectorate of Calcutta 15 cottahs 12 chittacks 16 square feet, but according, to the actual measurement 15 cottahs 4 chittacks and 39 square feet, and being holding No. 184 in block No. 10 in South Division in the said town of Calcutta and paying an annual Government revenue of rupees 2 15 annas and 4 pies to the Collectorate of Calcutta, and bounded on the north partly by the said Imambari Lane and partly by premises No. 26, Imambari; on the south and east by a filled-up municipal drain; and on the west partly by a passage leading to premises Nos. 24 and 25, Imambari Lane, and partly by premises No. 24, Imambari Lane.

Lot No. 3.—Premises No. 45, Imambari Lane, a one-storied brick-built messuage, tenement or dwelling-house and hereditaments, together with the piece or parcel of land thereunto belonging and on part whereof the same is erected and built, containing by estimation 2 cottahs 2 chittacks and 40 square feet, be the same a little more or less, and being holding No. 462 in block No. 13, South Division, and paying an annual Government revenue of 6 annas and 9 pies to the Collectorate of Calcutta, and bounded on the north by premises No. 44, belonging to Roobea Bibee; on the south by the said Imambari Lane; on the east by a passage leading to this property as well as to premises Nos. 43 and 44, Imambari Lane; and on the west by premises No. 46, Imambari Lane; occupied by a soorkee mill.

Lot No. 4.—Premises Nos. 6 and 7, Moonshee Dedar Bux's Lane, being a two-storied brick-built messuage, tenement or dwelling-house and hereditaments, together with the piece or parcel of land thereunto belonging and on part whereof the same are erected and built, containing by measurement 11 cottahs 2 chittacks and 23 square feet, holding No. 165 in block No. 9 in the South Division, and paying an annual Government revenue of rupees 2 2 annas and 7 pies to the Calcutta Collectorate, and bounded on the north by the said Moonshee Dedar Bux's Lane; on the south by the tenanted land of Shaik Alwar Rohoman, being No. 20, Taltolah Lane; on the east by premises No. 8, Moonshee Dedar Bux's Lane; and on the west partly by premises No. 5, and partly by premises No. 4, Moonshee Dedar Bux's Lane.

Lot No. 5.—No. 41, Karaya Bazar Road, in the Suburbs of Calcutta, being a piece or parcel of tenanted land, containing according to the pottah granted by the Collector of 24-Parganas 14 cottahs and 6 chittacks, but according to the actual measurement 15 cottahs 15 chitacks, situate, lying, and being in the district of 24-Parganas, sub-registration district Sealdah, thana Intally, and being holding No. 4 in Division No. 5, sub-division B, and paying an annual revenue of rupees 2 and 8 annas to the Collectorate of 24-Parganas, and bounded on the north by a public road, called Karaya Bazar Road; on the east by tenanted land of Meer Enayet Hossain and Meer Khadem Hossain; on the south by a municipal drain; on the west partly by the dwelling-house of Azir Golsaj and partly by the tenanted land of Chunder Kanto Mitter.

The abstract of title and conditions of sale may be seen at the office of the Registrar, High Court, Original Side, or at the office of Babu Kamini Kumar Guha at No. 11, Old Post Office Street, Calcutta, on any day before the sale and will be produced at the sale.

W. R. FINK, Registrar.

Kamini Kumar Guha, Plaintiff's attorney.

Calcutta High Court, Original Jurisdiction, the 23rd June 1902. (421—1—979)

Notification.

TO be sold in the sale-room of the Munsif's 2nd Court at Khulna on Monday, the 18th day of August 1902, at the hour of 12 o'clock noon, the undermentioned zamindari right of Babu Bhaba Nath Ray Choudhary, of Taki, the judgment-debtor in the execution case No. 163 of 1902 in execution of a money decree obtained against him by the Khulna Loan Company, Limited, in suit No. 806, dated the 3rd day of September 1901:—

Property.

All that undivided 2 gandas 1 couri 4½ danti share of the zamindari known as pargana Jamira, tauzi No. 35 of the Khulna Collectorate, paying an annual revenue of (Rs. 1,591-7-5) rupees fifteen hundred and ninety-one annas seven and pies five only, and consisting of the following kismuts, viz.:—kismuts Amadi, Badalkhali, chuck Bagurah Bagali, Baliadanga, Bishnupur, Dhawrail, Fatiabati, Dowali, Kashi Bissesworkati, Khanpur, Naksa, Patuli, kismut Patulikhali Simulia Tapakhali, all in the thana and sub-registry of Paikgacha, and kismuts Anulia, Bajnarati Baradal taraf *alias* Jungalabad, Bhagabanpur, Bholanathpur, Ekshara, Jaliarabad, Jungalee Abad, north Kalikapur, Madarbaria, Madia, Marikhali, Nakachuck *alias* Godarghat Nowakhali, chuck Putinkari, chuck Pratapnagar, Sankerdanga Temini chuck, in thana Ashashuni and kismuts Kalyanpur *alias* Dingajorah and Kalyanpur kismut in thana and sub-registry Kaliganj.

SASI BHUSAN SEN, Munsif.

Khulna, the 16th July 1902. (403—1)

Notification.

TO be peremptorily sold by the Registrar of the Calcutta High Court, Original Side, in his room in the Court-house on Saturday, the 30th day of August next, at 12 o'clock, noon, pursuant to the decree and order of the said Court made in suit No. 332 of 1900 [Harish Chunder Pal *versus* Abdool Hamid and others], and dated, respectively, 26th day of July 1900 and 8th day of February 1902—

All that piece or parcel of land measuring by estimation four cottahs five chittacks and five square feet, more or less, together with pucca one-storied and two-storied house and godowns in Wellesley Square, in the town of Calcutta, bearing municipal number 16 and butted and bounded on the north partly by the land and tiled hut of Fatema Bibee and partly by the tenanted house of Ishan Chunder Mitra, on the south by the tenanted land of the late Komed Kisti Alli, on the east partly by the two-storied tenanted house of Chooramoney Dey and partly by the tenanted house of Ishan Chunder Mitra, and on the west by Wellesley Square.

The abstract of title and conditions of sale may be inspected at the office of the Registrar, High Court, or at the office of Babu Jyotish Chandra Mitra, Attorney-at-law, at No. 8, Old Post Office Street, on any day before the sale and will be produced at the sale.

W. R. FINK, Registrar.

Jyotish Chandra Mitra, Attorney for the plaintiff.

Calcutta High Court, Original Side, the 22nd July 1902. (429—1—981)

In the Court of the 3rd Subordinate Judge, 3rd Court, Hooghly.

TITLE EXECUTION CASE No. 68 of 1902.

Akshay Kumar Sur, decree-holder, *versus* (1) Bama Pada Roy and (2) Boroda Prosad Roy, judgment-debtors.

THE undermentioned mortgaged property of the above judgment-debtors will be sold at public auction to the highest bid by the Nazir of the District Judge of Hooghly in his sale-room in the Court-house at 12 o'clock noon on the 11th August 1902 for the realisation of Rs. 746 due on the mortgage debt :—

Two annas 13 gandas 1 cowri and 1 kranti share of mauzas Mamudpur and Debikhand, both of which are situate at station and sub-registry Goghat, pargana Arambagh, as well as 2 annas 13 gandas 1 cowri and 1 kranti share of mauza Nij Kaloopookuriah, situate at station and sub-registry Panduah, pargana Arambagh. All the above three mauzas are comprised in tauzi No. 4082, lot Kaloopukuriah of the Hooghly Collectorate, paying an annual revenue of Rs. 544-2 5.

KALIDHAN CHATTERJI,
Subordinate Judge, 3rd Court, Hooghly.

Chinsura, the 18th July 1902. (417—1)

In the Court of Rai Kalidhan Chatterji Bahadur, the 3rd Subordinate Judge of Hooghly at Chinsura.

EXECUTION CASE No. 67 of 1902.

Akshay Kumar Sur, decree-holder, *versus* (1) Adhar Nath Kumar and (2) Sirish Chunder Kumar, judgment-debtors.

TO be peremptorily sold, by the Nazir of the Court, pursuant to an order passed in the above execution case in his sale verandah on the ground floor at the Court-house by public auction on the 11th day of August 1902 at the hour of 12 o'clock noon, the undermentioned property belonging to the judgment-debtors :—

An undivided moiety or half share of the judgment-debtors of a divided two-third share in all that brick-built house, being premises No. 34 Niogi Pookur East Lane in Taltollah, within the Town of Calcutta, with the land thereto belonging and on part whereof the same is erected and built, containing by estimation 4 cottahs 11 chitaks and 14 square feet, a little more or less, situate, lying in Block No II, Holding No. 36 in the south division of the Town of Calcutta, and bounded on the north by the tenanted house of Babu Sarat Chunder Mukerji, on the south by the tenanted house of Babu Jadu Nath Mallick, on the east by the tenanted house of Babu Jadu Nath Mallick, and on the west by the divided one-third share of premises No. 34 Niogi Pookur East Lane allotted to Babu Mati Lal Pal in Partition Suit No. 229 of 1876 of the High Court at Calcutta in its Ordinary Original Civil Jurisdiction.

KALIDHAN CHATTERJI,
Subordinate Judge, 3rd Court, Hooghly.

Chinsura, the 18th July 1902. (416—1)

INSOLVENT NOTICES.

In the Court for the Relief of Insolvent Debtors at Calcutta.

In the matter of HENRY LAWRENCE SMITH, an insolvent.

On Monday, the 30th day of June last, it was ordered that the matters of the petition of the said insolvent be heard on Tuesday, the 2nd day of September next, and that the said insolvent do then attend to be examined before the said Court.

Jogendra Nath Chatterjee, Attorney. (386—2)

In the matter of AGA SYED BAKUR SHIRAZI, an insolvent.

On Monday, the 2nd day of June last, it was ordered hat the matters of the petition of the said insolvent be heard on Tuesday, the 5th day of August next, and that the said insolvent do then attend to be examined beforet the said Court.

S. Md. Sultan Alum, Attorney. (387—2)

In the matter of KANYE LAL AGARWALLA, an insolvent.

On Friday, the 6th day of June last, it was ordered that the matters of the petition of the said insolvent be heard on Tuesday, the 5th day of August next, and that the said insolvent do then attend to be examined before the said Court.

Fox and Mandal, Attorneys. (388—2)

In the matter of ROGER JOHN DENNETT, an insolvent.

On Thursday, the 12th day of June last, it was ordered that the matters of the petition of the said insolvent be heard on Tuesday, the 5th day of August next, and that the said insolvent do then attend to be examined before the said Court.

T. H. Wilson & Co., Attorneys. (389—2)

In the matter of FOOL CHAND, an insolvent.

On Thursday, the 12th day of June last, it was ordered that the matters of the petition of the said insolvent be heard on Tuesday, the 5th day of August next, and that the said insolvent do then attend to be examined before the said Court.

Kali Mohun Rakshit, Attorney. (390—2)

In the matter of SAGOREMULL BAGARIA, an insolvent.

On Friday, the 13th day of June last, it was ordered that the matters of the petition of the said insolvent be heard on Tuesday, the 5th day of August next, and that the said insolvent do then attend to be examined before the said Court.

Akshay Kumar Mitter, Attorney. (391—2)

In the matter of SATISH CHUNDER BOSE and SARAT CHUNDER BOSE, carrying on business as Jute Balers at No. 16, Nilmoney Mitter's Street, in the town of Calcutta, under the name of Sarat Chunder Bose, insolvents.

On Monday, the 30th day of June last, it was, on the petition of Ghanu Lal Sanyal, residing at No. 111, Aheeritolla Street, in the town of Calcutta, a creditor of the above-named insolvents, Satish Chunder Bose and Sarat Chunder Bose, adjudged that the said Satish Chunder Bose and Sarat Chunder Bose have committed an act of insolvency under the provisions of the Act XI, Vic Cap. XXI, and by another order of the same date the estate and effects of the said insolvents were vested n the Official Assignee.

Mani Lal Sen, Attorney for the said creditor, Ghanu Lal Sanyal. (392—2)

Chief Clerk's Office, the 14th day of July 1902.

In the matter of RADHA KISSEN MEMANY (Radha Kissen Jetmul), an insolvent.

On Tuesday, the 1st day of July instant, an account of the receipts and disbursements of the Official Assignee from the 5th day of March to the 30th day of June last was filed in the Office of the Chief Clerk, and it was ordered that Tuesday, the 5th day of August next, be appointed for the further hearing of this matter for the purpose of making a dividend.

☞ Any creditor or other person interested who may intend to establish or oppose any claim upon the estate of the said insolvent may attend and be heard, having given notice to the Chief Clerk three clear days before the day of hearing.

A. B. Miller, Official Assignee. (423—1)

In the matter of BILASRAY KHEMKA, an insolvent.

On Tuesday, the 1st day of July instant, an account of the receipts and disbursements of the Official Assignee from the 7th day of October 1901 to the 30th day of June last was filed in the Office of the Chief Clerk, and it was ordered that Tuesday, the 5th day of August next, be appointed for the further hearing of this matter for the purpose of making a dividend.

☞ Any creditor or other person interested who may intend to establish or oppose any claim upon the estate of the said insolvent may attend and be heard, having given notice to the Chief Clerk three clear days before the day of hearing.

A. B. Miller, Official Assignee. (424—1)

In the matter of ALFRED ELDRED WALDIMER SHARPE, an insolvent.

(2nd insolvency.)

On Tuesday, the 1st day of July instant, an account of the receipts and disbursements of the Official Assignee from the 3rd day of September 1900 to the 30th day of June last was filed in the Office of the Chief Clerk, and it was ordered that Tuesday, the 5th day of August next, be appointed for the further hearing of this matter for the purpose of making a dividend.

☞ Any creditor or other person interested who may intend to establish or oppose any claim upon the estate of the said insolvent may attend and be heard, having given notice to the Chief Clerk three clear days before the day of hearing.

A. B. Miller, Official Assignee. (425—1)

In the matter of WALTER RAYMOND GOMES, an insolvent.

On Saturday, the 5th day of July instant, it was ordered that the matters of the petition of the said insolvent be heard on Tuesday, the 5th day of August next, and that the said insolvent do then attend to be examined before the said Court.

Insolvent in person. (426—2)

In the matter of WALTER RAYMOND GOMES, of No. 38, Mott's Lane, in the town of Calcutta, an assistant attached to the Government Medical Stores Office, an insolvent.

Notice that the petition of the said insolvent seeking the benefit of the Act XI Vic, Chapter XXI, was filed in the Office of the Chief Clerk on Saturday, the 5th day of July instant, and by an order of the same date the estate and effects of the said insolvent were vested in the Official Assignee.

Insolvent in person. (126½—1)

Chief Clerk's Office, the 21st day of July 1902.

In the matter of PRANKRISTO NUNDY, an insolvent.

Notice that an application for an *ad-interim* protection order has been this day made by the said insolvent, and that such application will be heard and disposed of by the Acting Commissioner of the Insolvent Court on Monday, the 28th day of July instant, at the hour of half-past ten o'clock in the forenoon.

☞ Any creditor of the said insolvent desirous of opposing such application must appear before the said Court at the time and place aforesaid.

Nafar Lall Mullick, Attorney.

Chief Clerk's Office, the 22nd day of July 1902. (130—1)

Notice.

In the matter of Shaikh Bajlu Rahoman, insolvent.

SHAIKH BAJLU RAHOMAN, son of late Shaikh Hingoo, of Kareya, Armani Bagan, thana Beniapukur, district 24-Parganas, was declared insolvent on the 5th July 1902. Creditors to prove their claims on 26th July 1902.

KALI PADO MUKHERJI, Munsif, 1st Court, Sealdah, vested with powers under sections 344, 359 of Civil Procedure Code.

Sealdah, the 17th July 1902. (420—1—976)

In the First Court of the Munsif of Alipore.

INSOLVENCY CASE No. 5 OF 1902.

NOTICE.

DESPAT OJHA, of Gangarambasti, Bhwoanipur, has, on the 12th July 1902, been declared an insolvent.

BEPIN BEHARY CHATTERJEE, Munsif of Alipore.

Alipore Munif's Court, the 14th July 1902. (406—1—971)

CALCUTTA POST OFFICE NOTICE.

Mails for—	Date and hour of closing at the General Post Office, Calcutta.		Route by which despatched.
	1902.	P.M.	
United Kingdom, Aden, Egypt, Europe, America, West Africa *vid* United Kingdom and East Africa *vid* Aden (and also South Africa, if superscribed on the cover *vid* United Kingdom or Aden).	24th July	At 6-30	Per P. & O. steamer from Bombay.
		Parcels P.M.	
Parcels and money-orders for the United Kingdom and other Foreign places.	23rd ,,	At 5 M.-O. P.M.	Ditto ditto.
		At 4	
* Australasian Colonies ...	29th ,,	,, 7-30	*Vid* Tuticorin and Colombo.*
† Straits Settlements (also China and Japan, if the steamer's name is superscribed on the cover).	25th ,,	,, 8-30	Per steamer *Laisang*.
Burma	24th ,,	,, 7-30	Per B. I. S. N. Co.'s steamer.
Burma, Penang and Singapore.	26th ,,	,, 7-30	Ditto ditto.
Akyab, Kyaukpyu and Sandoway.	26th ,,	,, 7-30	Ditto ditto.
Burma, Tavoy and Mergui ...	28th ,,	,, 7-30	Ditto ditto.
Mauritius, Réunion, Mayotte, and Nossi-Be.	23rd ,,	,, 7-30	Per steamer *Wardha* from Colombo.
South Africa (Letters) .	. .	,, 7-30	Per str. from Colombo.
Ditto (Parcels for Natal and Cape Colony only).	...	,, 5	
China and Japan ...	24th July	,, 8-30	Per H. T. *Pentakota*.

* Although the date entered in column 2 is, as far as can be calculated, the latest safe date of posting for the next Mail steamer, full allowance being made for the steamer being in advance of her published timing, Mails for the places mentioned in column 1 are despatched daily to Colombo, so that they may proceed by any steamer that has been unusually accelerated or retarded, or by any special opportunity that may be afforded by a steamer not belonging to one of the regular lines.

† Correspondence for China and Japan is despatched daily to Colombo, so that they may proceed by the first steamer available.

1. The letter-box for Inland articles will be cleared for the forenoon Mails at the following hours:—

For Goalundo, Arakan and Chittagong, at 5-30 A.M.
For Midnapore and Orissa districts, at 8-30 A.M.
For the Eastern districts, as far as Dacca and Mymensingh, at 6-30 A.M.
For Khulna and Jessore districts, at 7-30 A.M.
For Bombay, Central Provinces and Midnapore, *vid* Bengal-Nagpur Railway, at 10-45 A.M., and with a late fee of ½ anna up to 11-35 A.M.

2. The letter-box will be cleared for the evening Mails at the following hours, viz:—

For the East Indian Railway Loop Mail, at 2-30 P.M., and with a late fee of ½ anna up to 2-55 P.M.
For the Northern Bengal, Darjeeling and Assam Mails, at 3-25 P.M., and with a late fee of ½ anna up to 3-50 P.M.
For the Bombay Mail, *vid* Jubbulpore, at 6 P.M., and with a late fee of ½ anna up to 6-30 P.M.

For the Punjab Mail, at 7-30 P.M.
For Midnapore, Orissa and Madras Presidency, at 7-30 P.M. } and with a late fee of ½ anna up to 8 P.M. and
For the Khulna Mail, at 7-30 P.M. } with a late fee of 1
For the Eastern Bengal Mail, at 7-30 P.M. } anna up to 8-45 P.M.

3. Late registered letters will be received between the following hours:—

For the Bombay Mail, *vid* Jubbulpore, from 5 P.M. to 6-15 P.M.
For the Punjab Mail, from 6 P.M. to 7 P.M.
For the Eastern Bengal Mail, from 6 P.M. to 7 P.M.
For the Khulna Mail, from 6 P.M. to 7 P.M.
For Midnapore, Orissa and the Madras Presidency, from 6 P.M. to 7 P.M.

NOTE.—The late fee on each registered letter will be 2 annas which must be prepaid in stamps on the letter.

4. Articles for Burma and for Port Blair by sea are received without late fee up to 7-30 P.M., and with a late fee of ½ anna up to 8 P.M.

5. On the latest sale day of despatch of Mails for the Australasian Colonies, or any other Foreign Countries, *vid* Madras or Tuticorin, the letter-box for Foreign articles will be cleared for the last time at 7-30 P.M., and late letters and papers fully prepaid will be received up to 8-45 P.M.

6. On the day of despatch of the Mail for Europe (Thursday), the letter-box for Foreign articles will be cleared for the last time, for articles, without the late fee, at 6-30 P.M., and late letters and papers fully prepaid will be received up to 6-45 P.M. Late registered articles will be received from 5 to 6 P.M. On other days the letter-box for Foreign articles will be cleared for the last time, without the late fee, at 6 P.M., and late letters and papers will be received up to 6-30 P.M. for despatch by any Foreign Mails, *vid* Bombay, the same night and up to 8-30 P.M., late letters and papers up to 9 P.M., for any Foreign Mails despatched by sea. Foreign Mails for despatch *vid* Madras or Tuticorin are received up to 7-30 P.M., and with a late fee up to 8-45 P.M. The late fee for Foreign articles is 4 annas, which must be prepaid in stamps affixed to the articles.

JOHN OWENS,
Presidency Postmaster.

CALCUTTA G. P. O.,
The 22nd July 1902.

NADIA RIVERS.

Report showing the least depths of water for the week ending Friday, the 18th July 1902.

Name of river.	Reach of river.	Least depth of water soundings.	Remarks.
		Ft. In.	
Bhagirathi.	Entrance from Ganges ...	12 0	
	Thence to Giriah ...	8 0	Momintolah.
	From Giriah to Jangipur ...	7 6	Boshunpur.
	,, Jangipur to Berhampore	9 0	Amanigunje.
	,, Berhampore to Katwa	7 0	Mirzapur.
	,, Katwa to Nadia ...	6 0	Dafarpotah.
Bhyrub-Jalangi.	Entrance from Ganges ...	11 6	
	Thence to Akriganj ...	11 6	Chakharpara.
	Akriganj to junction of the Bhyrub and Jalangi	11 0	Harharia.
	Thence to Patkabari	12 6	Lalnagar.
	Patkabari to Nadia	8 9	Shahibnagore.
Mathabhanga.	Entrance from Ganges ...	9 6	
	Thence to Dewanganj ...	8 3	Jamalpur.
	From Dewanganj to Shikarpur	7 9	Kurmipara.
	,, Shikarpur to Boalia ...	9 9	Mahammadpur.
	,, Boalia to Chuadanga ...	8 9	Maheshpur.
	,, Chuadanga to Kissengunj and Hanskhali...	7 6	Chapra.

Gauge Readings.

	Locality.	Date.	Hour.	Height above zero.	Height above mean sea level.	Remarks.
			A.M.	Ft.	Ft.	
Ganges ...	Sahebganj ...	19-7-1902	6	11·58	79·58	Rising.
	Rampur Boalia...	19-7-1902	Noon	11·86	53·84	Do.
	Entrance of Bhagirathi Geriah ..	20-7-1902	A.M. 7	...	62·64	Do.
	Entrance of Bhyrub Jalangi Akhriganj ...	20-7-1902	A.M. 7	...	50·80	Do.
Bhagirathi.	Entrance of Mathabhanga ...	18-7-1902	...	11·25	...	Do.
	Jangipur ...	20-7-1902	...	...	57·80	Do.
	Berhampore ...	21-7-1902	A.M. 10	12·92	46·67	Do.
	Katwa ...	18-7-1902	...	14·60	29·76	Do.
Jalangi	Krishnagar ...	18-7-1902	...	10·75	...	Do.
	Sarupganj ...	19-7-1902	Noon	...	12·00	Do
Mathabhanga.	Hanskhali ...	19-7-1902	P.M. 4	8·70	...	Do.

A. K. BANERJEE, *Acctt.*,
For *Exe. Engr., Nadia Rivers Division.*
Berhampore, the 21st July 1902.

NOTICE TO SUBSCRIBERS.

SUBSCRIBERS are hereby informed that, unless complaint of non-receipt of any number is made to the Publisher of the series within three months of the date of publication, the benefits of the subscription rates for copies cost in transit will not be allowed, and full rates will be charged. The price per copy of each of the four series at subscription rates and at full rates is shown below —

	Per copy. Subscription rate. Town.	Mofussal.
	Rs. A. P.	Rs. A. P.
Calcutta Series	0 8 9	0 10 3
Each of the Madras, Bombay and Allahabad Series ...	0 5 3	0 5 9

	Full rate. Town.	Mofussal.
	Rs. A. P.	Rs. A. P.
Calcutta Series	2 0 0	2 0 0
Each of the Madras, Bombay and Allahabad Series ...	1 0 0	1 0 0

Notice.

THE *CALCUTTA GAZETTE.*

The 1st March 1901.—From this date the subscription to, and postage for, the *Calcutta Gazette* will be at the following rates, payable in advance:—

Per annum.	For Calcutta. Rs. A.	For the Mufassal, including postage. Rs. A.
Entire *Gazette*	15 0	20 0
Parts I, IA and IB together ...	5 0	7 8
Part II	1 0	2 12
Parts III, IV and IVA together	4 0	6 0
,, V and VI together ..	2 0	3 0
Appendix (Marine Notifications)	1 0	2 12
Supplement	5 0	7 8
Per issue.		
Entire *Gazette*	0 8	0 10
Supplement	0 4	0 5

N. B.—Separate Parts of each issue of the *Gazette*, and occasionally important Rules and Extracts, can be obtained from the Officer in charge, Bengal Secretariat Book Depôt, at the rate of one anna for every sixteen pages or a fraction thereof. Postage according to weight.

RATES FOR ADVERTISEMENTS in the *Calcutta Gazette* —

Full page, per issue ... ... Rs. 20
Half ,, ,, ,, ... ,, 10

Casual advertisements, 4 annas per line.

Annual Statement of the Sea-borne Trade and Navigation of the Bengal Presidency and of its Chief Port (Calcutta), and each of its Subordinate Ports Chittagong, Balasore, Cuttack, Pooree, and Naraingunge), Volumes I and II. Price Rs. 20 for 1899-1900. Published at the Calcutta Custom House Previous years' volumes can also be obtained at the same price.

Parts I, II and III of a Descriptive Catalogue of the Sanskrit Manuscripts in the Library of the Calcutta Sanskrit College, prepared by Pandit Hrishikesa Sastri and Babu Siva Chandra Gui, M.A., B.L., of that College are offered to the public for sale. The Catalogue is to be completed in 23 parts, the price of each part being 12 annas a copy, exclusive of postage. Copies can be obtained, from the Principal of the Sanskrit College, Calcutta.

GOVERNMENT PUBLICATIONS FOR SALE

At the Bengal Secretariat Book Depôt, Writers' Buildings, Calcutta, and by the following Agents :—

AGENTS IN INDIA.

Messrs. Thacker, Spink & Co., Calcutta and Simla.
Messrs. Newman & Co., Calcutta.
Messrs. Higginbotham & Co., Madras.
Messrs. Thacker & Co., Ld., Bombay.
Messrs. A. J. Combridge & Co. Bombay.
Mr. E. Seymour Hale, 53 Esplanade Road, Fort, Bombay, and Calcutta.
The Superintendent, American Baptist Mission Press, Rangoon.
Messrs. S. K. Lahiri & Co., Printers and Booksellers, College Street, Calcutta.
Rai Sahib M. Gulab Singh & Sons, Proprietors of the Mufid-i-am Press, Lahore, Punjab.
Messrs. V. Kalyanarama Iyer & Co., Booksellers, &c., Madras.
Messrs. D. B. Taraporevala, Sons & Co., Booksellers, Bombay.

AGENTS IN ENGLAND.

Mr. E. A. Arnold, 37 Bedford Street, Strand, London.
Messrs. Constable & Co., 2 Whitehall Gardens, London.
Messrs. Sampson Low, Marston & Co., St. Dunstan's House, Fetter Lane, London.
Messrs. Luzac & Co., 46 Great Russell Street, London.
Messrs. Kegan Paul, Trench, Trübner & Co., Charing Cross Road, London.
Mr. B. Alfred Quaritch, 15 Piccadilly, London.
Messrs. P. S. King & Son, 2 & 4 Great Smith Street, Westminster, London.
Messrs. H. S. King & Co., 65 Cornhill, London.
Messrs. Williams and Norgate, Oxford.
Messrs. Deighton Bell & Co., Cambridge.

AGENTS ON THE CONTINENT.

Messrs. R. Friedlander & Sohn, Berlin, N. W. Carlstrasse, 11.
Mr. Otto Harrassowitz, Leipzig.
Mr. Karl Hiersemann, Leipzig.
Mr. Ernest Leroux, 28 Rue Bonaparte, Paris.
Mr. Martinus Nijhoff, The Hague.

NOTICE.—Books required for private use can be purchased. Applications should be accompanied by a remittance in each case.

All remittances on account of subscriptions to, or prices of, Gazettes, Indian Law Reports or other Government publications available for sale at the Bengal Secretariat Book Depôt, or for cost of advertisements published in the Gazettes should, in future, be made payable to the "Treasurer, Bengal Secretariat, Calcutta." Advices of such remittances, if separately sent, should be addressed to the "Accountant, Bengal Secretariat." All advertisements intended for publication in the *Calcutta* or *Bengali Gazette* should be sent direct to the Superintendent, Government Printing, Bengal.

Books required for the Public Service should be obtained through the Heads of Departments.

☞ *The amounts within parentheses are for packing and postage.*

NEW PUBLICATIONS ISSUED DURING THE CURRENT QUARTER.

APPOINTMENT DEPARTMENT.

Quarterly Civil List of Bengal, corrected up to 1st July 1902. Super-Royal 8vo. Paper cover. Rs. 3. (4*a*.)

GENERAL DEPARTMENT.

Report of Emigration from the Port of Calcutta to British and Foreign Colonies, 1901. By the Protector of Emigrants, Calcutta. F'cap. Paper cover. 12*a*. (1*a*.)

LEGISLATIVE DEPARTMENT.

The Bengal Vaccination Act, 1880 (Bengal Act V of 1880), as modified up to 1st June 1902. Royal 8vo. Paper cover. Price 4*a*. (1*a*.)

The Salt Act, 1864 (Bengal Act VII of 1864), as modified up to 1st July 1902, with an appendix showing the extent to which the Indian Salt Act, 1882, is in force in Bengal. Royal 8vo. Paper cover. 3*a*. (1*a*.)

POLITICAL DEPARTMENT.

Administration Report on the Jails of Bengal for the year 1901. F'cap. Board. Paper cover. Rs. 3. (3*a*.)

PUBLIC WORKS DEPARTMENT.

Electric Traction.—Six lectures delivered in March 1902 at the Civil Engineering College, Sibpur, by J. W. Meares, Esq., Electrical Engineer to the Government of Bengal. Royal 8vo. Full cloth. Re. 1-8. (2*a*.)

Classified List and Distribution Return of Establishment of the Public Works Department, Bengal, corrected up to 30th June 1902. Super-Royal 8vo. Paper cover. 4*a*. (1*a*.)

REVENUE DEPARTMENT.

Season and Crop Report of Bengal for the year 1901-1902. F'cap. Paper cover. 8*a*. (1*a*.)

The Sale Law Manual, a Manual of the Revenue and the Patni Sale Laws with Notes and the rules, &c., under them. Royal 8vo. Board. Paper cover. Re. 1-4. (3*a*.)

Price-list of staple food-crops in the local areas of Bengal, for the period from 1st January to 31st March 1901. F'cap. Board. Paper cover. Re. 1. (2*a*.)

Rules for the keeping and inspection of accounts of collections in Government and Wards' Estates. Published under the authority of the Board of Revenue, L. P. Royal 8vo. Board. Paper cover. As. 8*a*. (1*a*)

PUBLICATIONS ISSUED BETWEEN THE 1ST JANUARY AND THE 30TH JUNE 1902.

APPOINTMENT DEPARTMENT.

Quarterly Civil List of Bengal corrected up to 1st April 1902. Super-royal 8vo. Paper cover. Price Rs. 3. (4*a*.)

FINANCIAL DEPARTMENT.

The Stamp Manual, 1902. A Manual for the guidance of officers in the administration of the Stamp Department. Royal 8vo. Board. Paper cover. Price Re. 1-8. (6*a*.)

Annual Report on the consumption of Stationery in Bengal during 1900-1901. F'cap. Paper cover. Rs. 3. (2*a*.)

GENERAL DEPARTMENT.

List of Officers in the Subordinate Educational Service, Bengal, corrected up to 1st April 1902. F'cap. Paper cover. 8*a*. (1*a*.)

JUDICIAL DEPARTMENT.

Question Papers set at the Pleadership and Muktearship Examinations for the year 1902. Royal 8vo. Paper cover. Price 2*a*. (1*a*.)

Question Papers set at the Examination of candidates for appointment as Sub-Inspectors of Police. July and November 1901. Royal 8vo. Paper cover. Price 5*a*. (1*a*.)

Question Papers set at the Examination of candidates for recruiting the staff of Superior Police Officers in Bengal and Assam, held in November 1901. Royal 8vo. Paper cover. Price 8*a*. (1*a*.)

LEGISLATIVE DEPARTMENT.

The Court of Wards' Act, 1879 (Bengal Act IX of 1879), in Hindi, as modified up to the 1st July 1901. Royal 8vo. Paper cover. Price 6*a* (1*a*.)

The Calcutta Port Act, 1890 (Bengal Act III of 1890), as modified up to 1st April 1902. Royal 8vo. Paper cover. Price 10*a*. (1*a*.)

MUNICIPAL DEPARTMENT.

Annual Returns of the Lunatic Asylums in Bengal with brief notes for the year 1901. Compiled by the Inspector-General of Civil Hospitals. F'cap. Paper cover. Price Re. 1. (2*a*.)

Account Rules under the Local Self-Government Act, Part VIII. F'cap. Paper cover. Price 8*a*. (.)

Annual Report of the Chemical Examiner's Department, Bengal, 1901. F'cap. Paper cover Price 8*a*. (2*a*.)

PUBLIC WORKS DEPARTMENT.

Distribution Return of Officers and Subordinates employed on Local Works in Bengal, corrected up to 31st December 1901. Super-royal 8vo. Paper cover. Price 2*a*. (1*a*.)

Embankment and Drainage Report of the Government of Bengal, Irrigation Department, for the year 1900-1901. F'cap. Boards Paper cover. Price Rs. 2 (3*a*.)

Classified List and Distribution Return of Establishment corrected up to 31st March 1902. Super-royal 8vo. Paper cover. Price 4*a*. (1*a*.)

Dacca Electric Lighting License, 1902. F'cap. Paper cover. Price 14*a*. (1*a*.)

Notes on the construction of Railways in India (for students) with 5 charts. F'cap. Paper cover. Price Re. 1. (1*a*.)

REVENUE DEPARTMENT.

Annual Report of the Burdwan Experimental Farm for the year 1900-1901. F'cap. Paper cover. Price 3*a*. (1*a*.)

Annual Report on the Survey Operations in Bengal during the year 1900-1901 (from 1st October 1900 to 30th September 1901). F'cap. Paper cover. Price Re. 1-8. (2*a*.)

Annual Report of the Director of the Department of Land Records, Bengal, on Settlements, for the year ending 30th September 1901. F'cap. Paper cover. Price 8*a*. (1*a*.)

The Practice and Procedure Manual, published under the authority of the Board of Revenue. Royal 8vo. Board. Paper cover. Price 12*a*. (3*a*).

OLDER PUBLICATIONS.

A General Catalogue of all Government Publications (corrected up to 31st December, 1901) may be obtained *gratis* on application to the Officer in charge, Bengal Secretariat Book Depôt.

Publications for sale at the office of the Chief Inspector of Explosives with the Government of India.

Rules for the manufacture, possession and sale of explosives issued by each of the Local Governments and Administrations. Price 12*a*.

Rules for the transport and importation of explosives issued by the Government of India. Price 12*a*.

Rules for the transport and importation of explosives at the Port of Calcutta. Price 4*a*.

GOVERNMENT PUBLICATIONS FOR SALE

BY THE SUPERINTENDENT OF GOVERNMENT PRINTING, INDIA, 8 HASTINGS STREET, CALCUTTA.

[A General Catalogue of all Government Publications may be obtained gratis from the Government Central Press, Calcutta.]

All books published by the Superintendent of Government Printing, India, can be purchased, either directly or through the following or any other booksellers:—

AGENTS IN INDIA.

Messrs. Thacker, Spink & Co., Calcutta and Simla.
Messrs. Newman & Co., Calcutta.
Messrs. Higginbotham & Co., Madras.
Messrs. Thacker & Co., Ld., Bombay.
Messrs. A. J. Combridge & Co., Bombay.
Messrs. V. Kalyanarama Iyer & Co., Madras.
Messrs. D. B. Taraporevala, Sons & Co., Bombay.
Superintendent, American Baptist Mission Press, Rangoon.
Rai Sahib M. Gulab Singh and Sons, Mufid-I-Am Press, Lahore.
Manager, Educational Book Depôts, Nagpur and Jubbulpore.*
Manager of the Imperial Book Depôt, 63 Chandni Chauk Street, Delhi.*
Manager, "East Coast News," Vizagapatam.*
Manager, "The Agra Medical Hall and Co-operative Association, Limited" (Successors to A. John & Co.), Agra.*
Mr. T. K. Sectharama Aiyar, Kumbakonam.*
Lala Debi Prasad, Vakil and Manager of Press, Cawnpore.*

AGENTS IN EUROPE.

Mr. E. A. Arnold, 37 Bedford Street, Strand, London.
Messrs. Constable & Co., 2 Whitehall Gardens, London.
Messrs. Sampson Low, Marston & Co., St. Dunstan's House, Fetter Lane, London.
Messrs. Luzac & Co., 46 Great Russel Street, London.
Messrs. Kegan Paul, Trench, Trübner & Co., Charing Cross Road, London.
Mr. B. Alfred Quaritch, 15 Piccadilly, London.
Messrs. P. S. King and Son, 2 & 4 Great Smith Street, Westminster.
Messrs. H. S. King & Co., 65 Cornhill, London, are also Agents for the sale of the Indian Army List.
Mr. Otto Harrassowitz, Mr. Karl Hiersemann } Leipzig.
Messrs. R. Friedlander & Sohn, Berlin, N. W. Carlstrasse, 11.
Mr. Ernest Leroux, 28 Rue Bonaparte, Paris.
Mr. Martinus Nijhoff, the Hague, Holland.
Messrs. Williams and Norgate, Oxford.
Messrs. Deighton Bell & Co., Cambridge.

* Agents for sale of the Legislative Department publications.

NOTICE.—Books and Acts required for private use only can be purchased. Applications should be accompanied by a remittance, unless it is wished that the books should be sent by value-payable post, in which case, besides the ordinary postage, an additional charge is made for registration and commission.

Books and Acts required for the public service should be obtained through Local Governments to whom the applicant is subordinate.

Applications for Government publications which are no longer in print should be made to the Agents of the particular Government under whose orders they were originally issued.

The amounts within parentheses are for packing and postage.

List of New Books published during the Current Quarter.

FINANCE AND COMMERCE DEPARTMENT.

List of Officers in the Finance and Commerce Department. Corrected to 1st May 1902. Royal 8vo. Paper cover. 4*a*. or 5*d*. (1*a*.)

STATISTICAL DEPARTMENT.

Review of the Trade of India in 1901-1902. F'cap. Paper cover. 8*a*. or 9*d*. (2*a*.)
Statistics of Cotton Spinning and Weaving in the Indian Mills in April, 1902, and in the corresponding month of 1900 and 1901. Royal 8vo. Stitched. 2*a*. or 2*d*. (1*a*.)

MILITARY DEPARTMENT.

List of Light-houses and Light-vessels in British India, including those in the Gulf of Aden as existing at the end of 1901. 21st Issue. Royal 8vo. Board. Re. 1 or 1*s*. 6*d*. (2*a*.)

List of Books published from January to June 1902.

LEGISLATIVE DEPARTMENT.

Chronological Tables of the Indian Statutes compiled, under the orders of the Government of India, by F. G. Wigley, Esq. Royal 8vo. Cloth. *Rs*. 4 or 6*s*. (7*a*.)
The Indian Penal Code (Act XLV of 1860), as modified up to the 1st July 1899, and with foot-notes brought down to 1st April 1901. *Rs*. 2-8 or 3*s*. 9*d*. (6*a*.)
The Indian Factories Act, 1881, as modified up to the 1st April 1891 (with foot-notes brought down to 1st July 1901). 5*a*. 6*p*. or 6*d*. (1*a*. 6*p*.)
Effect of Legislation for 1898, 1899, and 1900. *Re*. 1 or 1*s*. 6*d*. (2*a*.)
Chronological Tables of the Indian Statutes, 1901. *Re*. 1 or 1*s*. 6*d*. (2*a*.)
A Digest of Indian Law Cases, Vol. III. Cloth bound. *Rs*. 12 or 18*s*. (10*a*.)
Ditto ditto ditto. Quarter bound. *Rs*. 13 or 19*s*. 6*d*. (10*a*.)
Act IX of 1901. An Act further to amend the Indian Articles of War. 1*s*. or 1*d*. (1*a*.)
Act X of 1901. An Act further to amend the Court-fees Act, 1870. 1*a*. 3*p* or 1*d*. (1*a*.)
Act XI of 1901. An Act to facilitate the citation of certain Enactments and to amend and repeal certain obsolete Enactments.
Regulation III of 1901. A Regulation further to provide for the suppression of crime in certain frontier districts. 7*a*. 6*p*. or 9*d*. (1*a*. 6*p*.)
Regulation IV of 1901. A Regulation to make better provision for the suppression of murderous outrages in certain frontier tracts. 2*a*. 6*p*. (1*a*.)
Regulation V of 1901. A Regulation further to amend the Upper Burma Land and Revenue Regulation, 1899. 1*a*. 9*p*. or 2*d*. (1*a*.)
Regulation VI of 1901. A Regulation to repeal so much as is unrepealed of the Punjab Frontier Regulation, 1872, and of the Hazara Settlement Rules, 1*s*. or 1*d* (1*a*.)

Regulation VII of 1901. A Regulation to alter certain of the laws in force in the North-West Frontier Province, to declare that certain Enactments are in force therein, and to bar the application of certain others hereto. 11*a.* or 1*s.* 3*d.* (2*a.*)

Corrigendum slip for Act XIII of 1900. 1*a.*

Title-page and Contents to Acts of 1901. 1*a.* 6*p.* (1*a.*)

Index to Acts of 1901. 2*a.* 9*p.* or 3*d.* (1*a.*)

The European Vagrancy Act, 1874 (IX of 1874), as modified up to 1st December, 1901. 6*a.* 6*p.* or 7*d.* (1*a.*)

The Chaukidars Act, 1856 (XX of 1856), as modified up to 1st December, 1901. 7*a.* 6*p.* or 8*d.* (1*a.*)

The Registration of Ships Act, 1841 and 1850 (X of 1841 and XI of 1850), as modified up to 1st December 1893, and with foot-notes brought down to 1st December, 1901. 7*a.* or 7*d.* (1*a.*)

Table showing the effect of Legislation in the Governor-General's Council during 1901. 6*a.* or 6*d.* (1*a.*)

LIST OF TRANSLATIONS AND TRANSLITERATIONS OF ACTS PUBLISHED FROM 1ST OCTOBER 1901 TO 31ST MARCH 1902.

The Cattle-trespass Act, 1871 (I of 1871), as modified up to the 1st April 1901. In Urdu. 2*a.* (1*a.*)

Ditto. In Hindi. 2*a.* (1*a.*)

Act IX of 1901 (an Act further to amend the Indian Articles of War). In Urdu. 3*p.* (1*a.*)

Ditto. In Hindi. 3*p.* 1*a.*

Act X of 1901 (an Act further to amend the Court-fees Act, 1870). In Urdu. 3*p.* (1*a.*)

Ditto. In Hindi. 3*p.* (1*a.*)

HOME DEPARTMENT.

Chronological Tables for 1902, embodying Notifications by the Government of Bengal and Government of India prescribing holidays during the year with corresponding dates in English, Bengali, Velati, Fusli, etc. Royal 8vo. Paper cover. 4*a.* or 4*d.* (1*a.*)

Annual Report of the Sanitary Commissioner with the Government of India, 1900, with Appendices and Returns of Sickness and Mortality among European Troops, Native Troops, and Prisoners in India, for the year. F'cap. Boards. *Rs.* 3 or 4*s.* 6*d.* (8*a.*)

Report of Proceedings of the Central Indigenous Drugs Committee of India, Volume I. Royal 8vo. Board. Rs. 3-8 or 5*s.* 3*d.* (7*a.*)

List of Europeans and others in the English Factories in Bengal at the time of the Siege of Calcutta in the year 1756, with an appendix containing lists of European Sufferers. By S. Charles Hill, Esq., B.A., B.SC. Super-Royal 4to. Paper cover. Rs. 2 or 3*s.* (3*a.*)

Judicial and Administrative Statistics for British India. 6th issue, 1900-1901, and preceding years. F'cap. Board. Rs. 2 or 3*s.* (10*a.*)

The Countess of Dufferin's Fund Seventeenth Annual Report of the National Association for Supplying Female Medical Aid to the Women of India for the year 1901. Super-Royal 8vo. Re. 1 or 1*s.* 4*d.* (3*a.*)

DEPARTMENT OF REVENUE AND AGRICULTURE.

List of Officers in the Survey and other Scientific and Minor Departments subordinate to the Government of India in the Department of Revenue and Agriculture, corrected to 1st July 1901. Royal 8vo. Paper cover. 8*a.* or 9*d.* (2*a.*)

Report of the Committee on the Establishment of Co-operative Credit Societies in India. F'cap. Paper cover. 4*a.* or 5*d.* (2*a.*)

Forest Flora of the School Circle, North-Western Provinces, being a descriptive list of the indigenous woody plants of the Shaharanpur and Dehra Dun districts and the adjoining portions of the Tehri-Garhwal State in the North-Western Provinces, with Analyses. Double-Crown. 16mo. Full cloth. Re. 1-8 or 2*s.* (3*a.*)

Archæological Exploration in Chinese Turkestan. By Dr. M. A. Stein. Royal 4to. Cloth. Rs. 4 or 6*s.* (4*a.*)

Land Revenue Policy of the Indian Government. Royal 8vo. Cloth. 10*a.* or 1*s.* (4*a.*)

FOREIGN DEPARTMENT.

Report on the Administration of the Baluchistan Agency for 1900-1901. Re. 1-8 or 2*s.* 3*d.* (3*a.*)

Report on the Administration of the Hyderabad Assigned Districts for the year 1900-1901. F'cap. Limp cover. Rs. 3-12 or 5*s.* 6*d.* (6*a.*)

Report on the Political Administration of the territories within the Central India Agency for 1900-1901. F'cap. Limp cover. *Re.* 1-8 or 2*s.* (3*a.*)

Annotated Returns of the Dispensaries in Central India for 1900. F'cap. Limp cover. *Re.* 1-8 or 2*s.* (3*a.*)

Report on the Administration of the Civil and Military Station of Bangalore for the year 1900-1901. F'cap. Board. 8*a.* or 9*d.* (2*a.*)

Grammar and Vocabulary of Waziri Pashto. By J. G. Lorimer, Esq., I.C.S. Royal 8vo. Board. Rs. 3 or 4*s.* 6*d.* (5*a.*)

FINANCE AND COMMERCE DEPARTMENT.

List of Officers in the Finance and Commerce Department. Corrected to December 1901; to April 1902. 4*a.* or 5*d.* (1*a.*) each.

Papers relating to the proposed Establishment of a Central Bank in India. F'cap. Board. Re. 1 or 1*s.* 6*d.* (4*a.*)

Administration Report of the Mint at Bombay and Calcutta for 1900-1901. F'cap. Paper cover. Re. 1 or 1*s.* 6*d.* (2*a.*)

Schedule IV of the Indian Tariff Act (VIII of 1878) of 1902. Royal 8vo. Stitched. 6*a.* or 6*d.* (1*a.*)

STATISTICAL DEPARTMENT.

Trade and Navigation Accounts of British India for the months of December 1901 to May 1902. Royal 8vo. Stitched. 8*a.* or 9*d.* (3*a.*) each.

Accounts of the External Land Trade of British India for the months of September 1901 to March 1902. Royal 8vo. Stitched. 8*a.* or 9*d.* (2*a.*) each.

Accounts relating to the Trade carried by Rail and River in India in the quarter ending September 1901. Compared with the corresponding periods of the years 1899 and 1900 No. 2 of 1901-1902. F'cap. Paper cover. 8*a.* or 9*d.* (2*a.*)

Ditto ditto ending December 1901. Compared with the corresponding periods of the years 1899 and 1900. No 3 of 1901-1902. F'cap. Paper cover. 8*a.* or 9*d.* (2*a.*)

Accounts of the Trade of the French Possessions in India in the year ending 31st March 1901, and the four preceding years. F'cap. Paper cover. 2*a* or 3*d.* (1*a.*)

Statistics of Cotton Spinning and Weaving in the Indian Mills in January, February, and March 1902; in the ten months, April 1901 to January 1902; in the eleven months, April 1901 to February 1902, and in the twelve months, April 1901 to March 1902. Compared with the corresponding period of 1899-1900 and 1900-1901. Royal 8vo. Stitched. 2*a.* or 2*d.* (1*a.*) each.

Accounts of the Trade of Aden in the year ending 31st March 1901, and the four preceding years. F'cap. Paper cover. 10*a.* or 1*s.* (2*a.*)

Accounts of the Trade of the Portuguese Possessions in India in the year 1899-1900 and the four preceding years. F'cap. Paper cover. 2*a.* or 3*d.* (1*a.*)

Prices and Wages in India. Nineteenth issue, 1902. Super-Royal 4to. Board. Re. 1-8 or 2*s.* (9*a.*)

COMPTROLLER-GENERAL.

Finance and Revenue Accounts of the Government of India for 1900-1901. F'cap. Board. Rs. 2 or 3*s.* (8*a.*)

Appropriation Report on the Accounts of the Government of India for 1900-1901. By A. F. Cox, Esq. F'cap. Board. 8*a.* (5*a.*).

MILITARY DEPARTMENT.

The Monthly Indian Army List for February to March, May, June 1902. Royal 8vo. Paper cover. Re. 1-8 or 2*s.* 3*d.* (4*a.*) each.

Return of Wrecks and Casualties in Indian Waters for the year 1900. F'cap. Stiff cover. 12*a.* or 1*s.* (3*a.*)

Military Works Services Classified List and Distribution Return. Corrected up to 31st December 1901. Royal 8vo. Paper cover. 4*a.* or 5*d.* (1*a.*)

ndian Military Budget Estimate for the year 1902-1903. F'cap. Board. Re. 1-8 or 2*s.* 3d. (8*a.*)

PUBLIC WORKS DEPARTMENT.

Public Works Department Classified List and Distribution Return of Establishment. Corrected up to 31st December 1901. Super-Royal 8vo. Paper cover. Rs. 2 or 3*s.* (4*a.*)

Classified List (Public Works Department), Subordinate Establishment. Corrected up to 31st December 1901. Super-Royal 8vo. Paper cover. 4*a.* or 4*d.* (1*a.*)

Budget Estimate of the Indo-European Telegraph Department for the year 1902-1903. F'cap. Paper cover. 8*a.* or 9*d.* (1*a.* 6*p.*)

Budget Estimate of the Indian Telegraph Department for the year 1902-1903. F'cap. Paper cover. 8*a.* or 9*d.* (1*a.* 6*p.*)

History of Services of the Officers of the Engineer, Accounts, and State Railway Revenue Establishments. Corrected to 31st December 1901. In two Volumes. Royal 8vo Board. Vol. I, Rs. 2-8 or 3*s.* 9*d.* (6*a.*). Vol. II Rs. 2-8 or 8*s.* 9*d.* (6*a*). Complete, Rs. 5 or 7*s.* 6*d.* (9*a.*)

List of new books for sale at the Thomason College, Roorkee, which were not advertised before.

Roorkee Treatise on "Railways," 4th Edition, revised by F. Wolley Dod, F.C.H. Price, Rs. 3 per copy.

Roorkee Treatise on "Irrigation Works." By Lieutenant-Colonel J. Clibborn, I.S.C., B.A., L.C.E., C.I.E. Price Rs. 9 per copy.

Roorkee Treatise on "Sanitary Engineering." Compiled by Lieutenant-Colonel J. Clibborn, I.S.C., B.A., L.C.E., C.I.E. Price, Rs. 4-8 per copy.

Roorkee Manual of "Applied Mechanics," Volume II. The stability of structures mostly by graphic methods, by Lieutenant-Colonel J. H. C. Harrison, R.E. Price, Rs. 8-2 per copy.

Roorkee Manual of Hydraulics. Price per copy, Re. 1-4. (No. XIX, Elementary Treatise). By E. F. Tipple, Esq., B.A.

Designs for Wooden Bridges, together with rules for calculating the area of waterway, &c., and Plates. By late Rai Bahadur Kunhya Lal. Price per set, Rs. 4-2

Pamphlet on Examination for Acid Radicals: Tables giving Analysis of Acids. Price per copy, 8*a.*

Pamphlet on Examination for Acid Bases: Tables giving Analysis of Metallic Bases. Price, 8*a.* per copy.

Pamphlet on Note on Masonry Arches (College publication). Price, 4*a.* per copy.

Pamphlet on Small Direct Well Pumping Installations. Price, 4*a.* per copy.

Pamphlet on Experiments made on the passage of water through the sand of the Chenab River at the Khanki Weir. By Lieutenant-Colonel J. Clibborn, I.S.C., C.A., L.C.E., C.I.E. Price per copy, 12*a.*

Indian Household Account Book for a period of two years, comprising Daily Table Expense Account, Bread, Butter and Milk Account, Dhobey's Account, Servants' Wages Account, etc. Price, Rs. 3 per copy.

Cash must accompany order. Articles are sent by V.-P. P. to persons in Government employment only.

Application is to be made to the Curator, Thomason College Book Depôt, Roorkee.

Half-yearly list of new books and periodicals for sale at the Library of the Asiatic Society of Bengal, 57 Park Street, Calcutta.

ASIATIC SOCIETY'S PUBLICATIONS.

Proceedings Nos. 9 to 11 of 1901 and No. 1 of 1902, at 8*a.*

Journal, Part I, No. 2 of 1901, at Rs. 2.

" Part II, No. 2 of 1901, at Rs. 2.

" Part III, No. 2 of 1901, and Part III, No. 1 of 1902, at Rs. 2.

BIBLIOTHECA INDICA.

Upamitibhavaprapancha Katha. Fasc. 4 at 6*a.*

Catapatha Brahmana. Vol. I, Fasc. 5, at 6*a.*

Varsakriya Kaumudi. Fasc. 3 and 4, at 6*a.*

Nityacarapaddhati. Fasc. 2 and 3, at 6*a.*

Apastamba Sranta Sutra. Vol. III, Fasc. 16, at 6*a.*

Mahabhasyaprodipodyata. Vol. II, Fasc. 2 and 3, at 6*a*

Al-Muquddasai. (English.) Vol. I, Fasc. 2, at 12*a.*

List of books published by Meteorological Department from 1st January to 30th June, 1902.

Monthly Weather Review of India, from September, 1901, to January, 1902. By W. L. Dallas (illustrated by five plates). Quarto. Paper cover. Re. 1 per month.

Report of the Director, Government Observatory, Bombay, for the year ending 31st December, 1901. By N. A. F. Moos. Quarto. Paper cover.

Report on the Kodaikanal and Madras Observatories for the period 1st April to 31st December, 1901. By C. Michie Smith. Quarto. Paper cover.

Indian Meteorological Memoirs, Volume XII, Part II. By John Eliot. Quarto. Papar cover. Rs. 3.

Indian Meteorological Memoirs, Volume XIII. By John Eliot. Quarto. Paper cover Rs 5.

The Indian Law Reports.

Published under Authority.

THE Indian Law Report published under the authority of the Governor-General in Council, appear in monthly parts, published as soon as possible after the first of each month at Calcutta, Madras, Bombay, and Allahabad, and comprise four series—one for the Calcutta High Court, a second for the Madras High Court, a third for the Bombay High Court, and a fourth for the Allahabad High Court The cases heard by the Privy Council on appeal rom each High Court are reported in the Series for that High Court. Cases heard by the Privy Council on appeal from Provinces in India not subject to any High Court are reported in the Calcutta Series.

The Calcutta Series is distributed by the Bengal Secretariat Book Depôt, and the Madras, Bombay, and Allahabad Series are distributed direct from Madras, Bombay, and Allahabad respectively.

In supersession of the previous advertisements, on and from the 1st January 1889 the terms of subscription and sale will be as follows for current issues as well as for back numbers of the reports from 1876:—

Terms of subscription payable annually in advance.

For the complete series, *including postage* (Inland rate) Rs. 22-8.

Ditto ditto (Overland rate) Rs. 28.

	Without postage.	With postage.
	Rs. A. P.	Rs. A. P.
For the Calcutta Series	10 0 0	12 8 0
,, each of the Madras, Bombay, and Allahabad Series	6 0 0	7 0 0
,, a part of the Calcutta Series purchased separately (*inclusive of postage in India*)	... ...	2 0 0
,, a part of each of the Madras, Bombay, and Allahabad Series purchased separately (*inclusive of postage in India*)	.....	1 0 0

The following are the rates at which deductions will be made for parts out of print and at which duplicate copies will be supplied to subscribers when required in place of copies lost in transit, provided complaint of non-receipt is made to the Publisher within three months of the date of publication :—

	For town.	For mufassal.
	Rs. A. P.	Rs. A. P.
For the Calcutta Series. per copy ...	0 8 9	0 10 3
,, each of the Madras, Bombay, and Allahabad Series, per copy ...	0 5 3	0 6 9
,, the Calcutta Series. For the year	7 2 6	8 6 3
,, each of the Madras, Bombay and Allahabad Series. For the year	4 4 6	4 11 3

Persons desiring to subscribe for or purchase the Report should apply to—

The Superintendent, Government Press, Madras.

,, Superintendent, Government Central Press, Bombay.

,, Curator of Government Books, North-Western Provinces and Oudh.

,, Officer in charge, Bengal Secretariat Book Depôt.

Orders and subscriptions for 1903 should be at once registered and remitted by money-order payable to the Treasurer, Bengal Secretariat, Calcutta.

ADVERTISEMENTS will be received for publication on the wrappers of the Indian Law Reports, Calcutta Series, at the following rates, payable in advance—

	One page.	Half page.	Quarter page.
	Rs.	Rs.	Rs.
For one issue ...	20	14	9
,, three issues ...	55	36	4
,, six ,, ...	100	68	45
,, nine ,, ...	145	96	64
,, twelve ,, ...	180	12	80

SEVERAL volumes of the BENGAL LAW REPORTS, from August 1868 to December 1875, and FULL BENCH RULINGS, Parts I and II, are available at the following rates:—

	Without postage.	With postage.
	Rs. A. P.	Rs. A. P.
Benga Law Reports, for one year ... Single copies, Rs. 2 per copy.	0	22 8 0
Full Bench Rulings, Parts I and II ...	20 0 0	22 8 0

Obtainable at the Bengal Secretariat Book Depôt, Writers' Buildings, Calcutta.

Remittances to be forwarded to the Treasurer, Bengal Secretariat, Writers' Buildings, Calcutta.

The complete series of the INDIAN LAW REPORTS for the years 1876 to 1885, 1887, and 1890 to 1901 having now been reprinted, are available, and may be purchased for all the years, or any particular year, on application to the Officer in charge, Bengal Secretariat Book Depôt.

The wanting parts of the Reports for the remaining years are being reprinted, and complete Reports from the beginning to date will be available shortly. The subscription, Rs. 22-8 per annum, should be remitted in advance to the Treasurer, Bengal Secretariat

APPENDIX TO

The Calcutta Gazette.

WEDNESDAY, JULY 23, 1902.

NOTICES TO MARINERS.

GOVERNMENT OF BENGAL—MARINE DEPARTMENT.

NOTICE TO MARINERS—No. 216.

[First Publication.]

PACIFIC OCEAN (SOUTH)—TUAMOTU OR LOW ARCHIPELAGO.

Ernest Legouvé reef—Amended position.

WITH reference to Notice to Mariners No. 180, dated the 20th June 1902, issued by this Office, the British Admiralty has given further notice (No. 378 of 1902) that the original report of the Captain of the French vessel *Ernest Legouvé* states that he passed on December 17th, 1901, at 4 P.M., a reef about 100 yards long, in approximately lat. 35° 14′ S., long. 150° 38′ W., and not 152° 58′ W., as given by the authority for the above Notice. The second reef was also seen.

NOTE.—The longitude of 152° 58′ W. appears to have been given from the meridian of Paris.

This Notice affects the following Admiralty Charts:—Pacific oceans, Nos. 2683, 788, 783: Also, Pacific islands, vol. III, 1900, page 27.

E. J. BEAUMONT, COMDR., R.I.M.,
Port Officer of Calcutta.

Published for general information.

C. B. BAYLEY,
Asst. Secy., Marine Department.

CALCUTTA, *the 19th July 1902.*

GOVERNMENT OF BENGAL—MARINE DEPARTMENT.

NOTICE TO MARINERS—No. 217.

[First Publication.]

INDIA, WEST—MALABAR COAST.

Cochin and Narakal—Wreck disappeared—Buoys removed.

THE British Admiralty has given notice (No. 380 of 1902) that the wreck shown on some copies of Admiralty Chart, No. 749, 12 cables N. 83° W from Cochin lighthouse, has disappeared and that the buoy marking it, and also the red anchoring buoy situated about 2¼ miles S. 73° W. from Narakal light, have been withdrawn.

Approximate position, Narakal light, lat. 10° 2¾′ N., long. 76° 12¾ E.

(*Variation 1° Easterly in 1902.*)

This Notice affects the following Admiralty Chart:—Malabar coast, No. 749: Also, West Coast of Hindustan Pilot, 1898, pages 129 and 131.

E. J. BEAUMONT, COMDR., R.I.M.,
Port Officer of Calcutta.

Published for general information.

C. B. BAYLEY,
Asst. Secy., Marine Department.

CALCUTTA. *the 19th July 1902.*

GOVERNMENT OF BENGAL—MARINE DEPARTMENT.

NOTICE TO MARINERS—No. 218.

[First Publication.]

EASTERN ARCHIPELAGO—Makassar strait.

North Watcher—Light established.

With reference to Notice to Mariners No. 92, dated the 12th April 1902, issued by this Office, the British Admiralty has given further notice (No. 382 of 1902) that a 5th order *white flashing* light *every five seconds*, elevated 295 feet above high water, and said to be visible in clear weather from a distance of 23 miles, has been established on an iron framework tower, erected on the summit of North Watcher island, northern entrance to Makassar strait.

Approximate position on Chart No. 2636, lat. 0° 35′ N., long 119° 47′ E.

This Notice affects the following Admiralty Charts:—China sea, No. 2660b; Eastern archipelago, No. 941a; strait of Makassar, No. 2336: Also, List of Lights, part VI, 1902, page 98; and Eastern archipelago, part II, 1893, page 336.

E. J. Beaumont, Comdr., r.i.m.,
Port Officer of Calcutta.

Published for general information.

C. B. Bayley,
Calcutta, *the 19th July 1902.* *Asst. Secy., Marine Department.*

GOVERNMENT OF BENGAL—MARINE DEPARTMENT.

NOTICE TO MARINERS—No. 202.

[Second Publication.]

INDIA, WEST—Bombay coast.

Rájpuri point—Whale reef buoy removed.

The Bombay Government has given notice (No. 73 of 1902) that the red buoy on the north side of the 'Whale Reef' off Rájpuri Point was removed for the south-west monsoon on the 30th ultimo.

E. J. Beaumont, Comdr., r.i.m.,
Port Officer of Calcutta.

Published for general information.

C. B. Bayley,
Calcutta, *the 7th July 1902.* *Asst. Secy., Marine Department.*

GOVERNMENT OF BENGAL—MARINE DEPARTMENT.

NOTICE TO MARINERS—No. 203.

[Second Publication.]

BAY OF BENGAL—Burma coast.

Rangoon river—Buoy placed to mark the Middle bank extension.

The Bombay Government has given notice (No. 75 of 1902) that information has been received from the Principal Port Officer, Rangoon, dated 11th June 1902, that a third class Can Buoy with Staff and St. George's Cross has been placed N. 53° E. (magnetic) distance 4·6 cables from 'Dark foliaged tree' on east side of the entrance to 'Deserters' Creek.

This tree has a pole with two balls on it.

E. J. Beaumont, Comdr., r.i.m.,
Port Officer of Calcutta.

Published for general information.

C. B. Bayley,
Calcutta, *the 7th July 1902.* *Asst. Secy., Marine Department.*

GOVERNMENT OF BENGAL—MARINE DEPARTMENT.

NOTICE TO MARINERS—No. 204.

[Second Publication.]

BAY OF BENGAL—Burma coast.

Rangoon river—Upper Hastings Channel buoy relaid.

The Bombay Government has given notice (No. 76 of 1902) that information dated 14th June 1902 has been received from the Principal Port Officer, Rangoon, that the Upper Hastings Channel Buoy has been relaid 300 feet N. 36° W. (magnetic) of its former position in 6 feet reduced.

This Notice affects the following Admiralty Chart:—Rangoon River and Approaches, No. 833, and Bay of Bengal Pilot, 3rd edition, 1901, page 353.

E. J. Beaumont, Comdr., R.I.M.,
Port Officer of Calcutta.

Published for general information.

C. B. Bayley,
Asst. Secy., Marine Department.

Calcutta, *the 7th July 1902.*

GOVERNMENT OF BENGAL—MARINE DEPARTMENT.

NOTICE TO MARINERS—No. 205.

[Second Publication.]

INDIA, WEST—Bombay coast.

Certain buoys removed for the S. W. monsoon.

The Bombay Government has given notice (No. 77 of 1902) that the undermentioned buoys were removed from their positions on the dates noted against each:—

Alibág Buoy	16th May 1902.
Bánkot Buoy	18th „ „
Anjanvel Buoy	20th „ „
Ambulgad Reef Buoy (Jaitápur)	18th „ „
Chaldea Rock Buoy	16th „ „
Málvan outer Rock Buoy	19th „ „
Johnston Castle Buoy	20th „ „
Málvan Harbour Buoys	21st „ „
Vengurla Harbour Buoys	16th „ „
Kárwár Harbour Buoys	20th „ „
S.S. *Brahmani* Wreck Buoy	27th „ „

E. J. Beaumont, Comdr., R.I.M.,
Port Officer of Calcutta.

Published for general information.

C. B. Bayley,
Asst. Secy., Marine Department.

Calcutta, *the 7th July 1902.*

GOVERNMENT OF BENGAL—MARINE DEPARTMENT.

NOTICE TO MARINERS—No. 206.

[Second Publication.]

AUSTRALIA—Coral sea.

Bellona reefs—Reefs reported to the eastward.

The British Admiralty has given notice (No. 363 of 1902) that the Master of the schooner *Waiwera* reports having seen to the eastward of the Bellona reefs a reef about 3½ miles long, enclosing a lagoon, the northern end of the reef being in about lat. 20° 32′ S., long. 159° 35′ E. On the reef was a sandy cay.

Also, another reef, on which was seen the wreck of a wooden vessel, in about lat. 21° 25′ S., long. 159° 27′ E.

This Notice affects the following Admiralty Charts:—Pacific ocean, No. 780; Coral sea, No. 2763: Also, Australia Directory, vol. II, 1898, page 532.

E. J. Beaumont, Comdr., R.I.M.,
Port Officer of Calcutta.

Published for general information.

C. B. Bayley,
Asst. Secy., Marine Department.

Calcutta, *the 12th July 1902.*

GOVERNMENT OF BENGAL—MARINE DEPARTMENT.

NOTICE TO MARINERS—No. 207.

[Second Publication.]

EASTERN ARCHIPELAGO—JAVA, EAST COAST.

Banjuwangi—Light established—Prohibited anchorage.

THE British Admiralty has given notice (No. 365 of 1902) that a *red fixed* light, visible from a distance of 3 miles, has been established upon an iron framework support 19 feet high, painted white, erected at a distance of about 1½ cables S. 74° E. from the lighthouse at Banjuwangi.

This light, in line with the principal light N. 74° W., marks the southern limit of the anchorage, and vessels are prohibited from anchoring to the southward of it on account of the telegraph cables.

Approximate position, lat. 8° 13′ S., long. 114° 23′ E.

(*Variation 1° Easterly in 1902.*)

This Notice affects the following Admiralty Charts:—Surabaya strait, No. 934; plan of Banjuwangi on Chart No. 932: Also, List of Lights, part VI, 1902, page 94; Eastern Archipelago, part II, 1893, page 167; and Supplement, 1899, page 21.

E. J. BEAUMONT, COMDR., R.I.M.,
Port Officer of Calcutta.

Published for general information.

C. B. BAYLEY,
Asst. Secy., Marine Department.

CALCUTTA, *the 12th July 1902.*

GOVERNMENT OF BENGAL—MARINE DEPARTMENT.

NOTICE TO MARINERS—No. 208.

[Second Publication.]

EASTERN ARCHIPELAGO—SUMATRA, SOUTH-WEST COAST.

Maki bay—Reef reported.

THE British Admiralty has given notice (No. 366 of 1902) that a reef with a depth of 3½ fathoms over it is reported to exist in the approach to Maki bay, situated with Batu Tonkah point bearing N. 7° W., distant 5 cables, and pulo Sukodono S. 52° E.

Approximate position, lat. 3° 24½′ N., long. 97° 3½′ E.

Depths of from 7 to 8 fathoms surround this reef.

(*Variation 1° Easterly in 1902.*)

This Notice affects the following Admiralty Chart:—Acheh head to Tyingkok bay, No. 2760: Also, China Sea Directory, vol. I, 1896, page 273.

E. J. BEAUMONT, COMDR., R.I.M.,
Port Officer of Calcutta.

Published for general information.

C. B. BAYLEY,
Asst. Secy., Marine Department.

CALCUTTA, *the 12th July 1902.*

GOVERNMENT OF BENGAL—MARINE DEPARTMENT.

NOTICE TO MARINERS—No. 209.

[Second Publication.]

CHINA, SOUTH-EAST COAST—MIRS BAY.

Long harbour—Shoals.

THE British Admiralty has given notice (No. 368 of 1902) of the existence of the undermentioned shoals in Long Harbour, Mirs bay:—

1. A shoal composed of stones and sand, with a depth of 12 feet over it at low water springs, extending for a distance of 1¾ cables from the western side of Grass island; the western extremity of this shoal is steep to and situated with the western extremity of Grass island bearing N. 2° W., distance 3 cables, and Sam mau shak N. 79° W.
2. A rock, circular in shape and 75 yards in diameter, with a depth of 4½ fathoms over it at low water springs, situated with the western extremity of Grass island bearing N. 33° E., distant 6$\frac{1}{10}$ cables, and Sam mau shak N. 31° W.
   This rock is steep to.

3. A rock, with a depth of 4 feet over it at low water springs, situated with the western extremity of Grass island bearing N. 13° W., distant 7 cables, and Sam mau shak N. 56° W.
   This rock is steep to on its northern side, the 5-fathom contour line extends 45 yards to the westward of it.
4. A rock, circular in shape and 35 yards in diameter, with a depth of 4½ fathoms over it at low water springs, situated with western extremity of Grass island bearing N. 3° W., distant 8½ cables, and Sam mau shak N. 41° W.
   This rock is steep to.

Approximate position, western extremity of Grass island, lat. 22° 29′ N., long. 114° 21′ E.

(*Variation 1° Easterly in 1902.*)

This Notice affects the following Admiralty Charts:—Macao to Pedro Blanco, No. 3026; Mirs bay, No. 1964: Also, China Sea Directory, vol. III, 1894, page 126; and Supplement, 1898, page 14.

E. J. BEAUMONT, COMDR., R.I.M.,
Port Officer of Calcutta.

Published for general information.

C. B. BAYLEY,
Asst. Secy., Marine Department.

CALCUTTA, *the 12th July 1902.*

GOVERNMENT OF BENGAL—MARINE DEPARTMENT.

NOTICE TO MARINERS—No. 210.

[Second Publication.]

NEW ZEALAND—NORTH ISLAND, EAST COAST.

Firth of Thames, Middle bank—Its non-existence.

THE British Admiralty has given notice (No. 370 of 1902) that a very careful but unsuccessful search has been made for Fishing or Middle bank, Firth of Thames, and that depths of 14 fathoms and upwards were found everywhere near the reported position; this shoal, on which there was supposed to be a depth of 3 fathoms, has therefore been expunged from the Charts.

Approximate position, lat. 36° 54¾′ S., long. 175° 21′ E.

This Notice affects the following Admiralty Chart:—Tutukaka harbour to Mayor island No 2543: Also, New Zealand Pilot, 1901, page 112.

E. J. BEAUMONT, COMDR., R.I.M.,
Port Officer of Calcutta.

Published for general information.

C. B. BAYLEY,
Asst. Secy., Marine Department.

CALCUTTA, *the 12th July 1902.*

GOVERNMENT OF BENGAL—MARINE DEPARTMENT.

NOTICE TO MARINERS—No. 211.

[Second Publication.]

PACIFIC OCEAN—LUZON, WEST COAST.

Lingayen gulf—Shoal reported.

THE British Admiralty has given notice (No. 371 of 1902) of the existence of a coral reef about one-third of a mile long, and with a depth of 2½ fathoms over it in the entrance to Lingayen gulf, situated with San Fernando point lighthouse bearing N. 1° W., distant 2½ miles.

Approximate position, lat. 16° 35½′ N., long. 120° 17′ E.

(*Variation Nil in 1902.*)

This Notice affects the following Admiralty Chart:—The island of Luzon, No. 2454: Also, Eastern Archipelago, part I, 1890, page 43; Revised Supplement, 1898, relating to that work, page 4; China Sea Directory, vol. II, 1899, page 323; and Supplement, 1901, page 13.

E. J. BEAUMONT, COMDR., R.I.M.,
Port Officer of Calcutta.

Published for general information.

C. B. BAYLEY,
Asst. Secy., Marine Department.

CALCUTTA, *the 12th July 1902.*

GOVERNMENT OF BENGAL—MARINE DEPARTMENT.

NOTICE TO MARINERS—No. 212.

[Second Publication.]

NEW ZEALAND—North island, east coast.

Hauraki gulf—Rock on the westward of Rakino island.

The British Admiralty has given notice (No. 372 of 1902) of the existence of a rock, with a depth of 4 feet over it at low water springs, situated with the summit (195 feet) of Rakino island bearing S. 74° E., distant 8¼ cables, and the western extremity of Tapu island S. 26° W.

Approximate position on Chart No. 1896, lat. 36° 43′ S., long. 174° 55¾′ E.

(*Variation 14° Easterly in 1902.*

This Notice affects the following Admiralty Charts:—Tutukaka harbour to Mayor island, No. 2543; Entrance to Auckland harbour, No. 1896: Also, New Zealand Pilot, 1901, page 49.

E. J. Beaumont, Comdr., r.i.m.,
Port Officer of Calcutta.

Published for general information.

C. B. Bayley,
Calcutta, *the 12th July 1902.* *Asst. Secy., Marine Department*

GOVERNMENT OF BENGAL—MARINE DEPARTMENT.

NOTICE TO MARINERS—No. 213.

[Second Publication.]

AUSTRALIA—Torres straits, inner route.

Tih Tih reef—Beacon re-erected.

The Portmaster, Brisbane, has given notice (No. 4 of 1902) that the Beacon on Tih Tih Reef reported to be down has now been re-erected.

Chart affected—No. 2921; Australia Directory, vol. 2.

E. J. Beaumont, Comdr., r.i.m.,
Port Officer of Calcutta.

Published for general information.

C. B. Bayley,
Calcutta, *the 12th July 1902.* *Asst. Secy., Marine Department.*

GOVERNMENT OF BENGAL—MARINE DEPARTMENT.

NOTICE TO MARINERS—No. 214.

[Second Publication.]

AUSTRALIA—Fitzroy river.

Upper Flats lightship—Discontinuance of tide signals.

The Acting Portmaster, Brisbane, has given notice (No. 5 of 1902) that the improvements in this portion of the Fitzroy River having rendered tide signals no longer necessary, notice is hereby given that on and after 30th June they will not be exhibited from the Lightship.

Chart affected—No. 363: Australia Directory, vol. 2.

E. J. Beaumont, Comdr., r.i.m.,
Port Officer of Calcutta.

Published for general information.

C. B. Bayley,
Calcutta, *the 12th July 1902.* *Asst. Secy., Marine Department.*

GOVERNMENT OF BENGAL—MARINE DEPARTMENT.

NOTICE TO MARINERS—No. 215.

[Second Publication.]

AUSTRALIA—INSKIP POINT.

Discontinuance of Pilot service.

THE Portmaster, Brisbane, has given notice (No. 6 of 1902) that, on and after the 30th instant, the Pilot Service at Inskip Point will be discontinued.

Vessels leaving Brisbane, and requiring the services of a Pilot through Sandy Straits, are requested to give notice to the Marine Department at least twenty-four hours before departure.

Vessels from the North are requested to give similar notice to the Harbour Office, Rockhampton or Townsville.

Chart affected—No. 1068; Australia Directory, vol. 2.

E. J. BEAUMONT, COMDR., R.I.M.,
Port Officer of Calcutta.

Published for general information.

C. B. BAYLEY,
CALCUTTA, *the 12th July 1902.* *Asst. Secy., Marine Department.*

GOVERNMENT OF BENGAL—MARINE DEPARTMENT.

NOTICE TO MARINERS—No. 190.

[Third Publication.]

PACIFIC OCEAN—FIJI ISLAND.

Kadavu—The light at Cape Washington installed.

WITH reference to Notice to Mariners issued by this office, No. 58, dated the 8th March 1902, the Acting Receiver-General, Suva, has given further notice, dated the 10th May 1902, that on the 1st March 1902 the light was installed in the light-house at Cape Washington, the most westerly point of the island of Kadavu (latitude 19° 6′ S., longitude 177° 58′ E.).

The height of the light is 202 feet above high-water level.

The light is a Fourth Order White Dioptric Fixed Light, and is visible between the magnetic bearings of S. 3° W. through W. to N. 13° E.

E. J. BEAUMONT, COMDR., R.I.M.,
Port Officer of Calcutta.

Published for general information.

C. B. BAYLEY,
CALCUTTA, *the 30th June 1902.* *Asst. Secy., Marine Department.*

GOVERNMENT OF BENGAL—MARINE DEPARTMENT.

NOTICE TO MARINERS—No. 191.

[Third Publication.]

PACIFIC OCEAN—FIJI ISLANDS.

Koro island—The light on Vunuku point installed.

WITH reference to Notice to Mariners No. 131, dated the 13th May 1902, issued by this office, the Acting Receiver-General, Suva, has given further notice that on the 1st March 1902 the light was installed in the light-house at Vunuku, the most easterly point of the island of Koro (latitude 17° 22′ S., longitude 179° 26′ E.).

The height of the light is 187 feet above high-water level.

The light is a Fourth Order Red Dioptric Fixed Light, and is visible between the magnetic bearings of S. 40° W. through E. to N. 40° E.

E. J. BEAUMONT, COMDR., R.I.M.,
Port Officer of Calcutta.

Published for general information.

C. B. BAYLEY,
CALCUTTA, *the 30th June 1902.* *Asst. Secy., Marine Department.*

GOVERNMENT OF BENGAL—MARINE DEPARTMENT.

NOTICE TO MARINERS—No. 192.

[Third Publication.]

PACIFIC OCEAN—FIJI ISLANDS.

Wailagilala—The light replaced.

WITH reference to Notice to Mariners No. 58, dated the 8th March 1902, issued by this office, the Acting Receiver-General, Suva, has given further notice that on the 10th April 1902 the Catoptric Light at Wailagilala (latitude 16° 45′ S., longitude 179° 6′ W.) was replaced by a Fourth Order White Dioptric Fixed Light, which is visible between the magnetic bearings of N. 64° E. through N. to S. 42° W.

The height of the light is 95 feet above high-water level.

E. J. BEAUMONT, COMDR., R.I.M.,
Port Officer of Calcutta.

Published for general information.

C. B. BAYLEY,
CALCUTTA, *the 30th June 1902.* *Asst. Secy., Marine Department.*

GOVERNMENT OF BENGAL—MARINE DEPARTMENT.

NOTICE TO MARINERS—No. 193.

[Third Publication.]

PACIFIC OCEAN—FIJI ISLANDS.

Wakaya reef—Light-house erected.

WITH reference to Notice to Mariners No. 131, dated the 13th May 1902, issued by this Office, the Acting Receiver-General, Suva, has given further notice that a new wooden structure has been erected on the south point of the Wakaya reef. The height of the building is 88 feet above low-water level.

The light will be a Third Order White Dioptric, visible round an arc of the horizon of 230° to the southward.

It is expected that the light will be installed about 31st July 1902, due notice of which will be given.

E. J. BEAUMONT, COMDR., R.I.M.,
Port Officer of Calcutta.

Published for general information.

C. B. BAYLEY,
CALCUTTA, *the 30th June 1902.* *Asst. Secy., Marine Department.*

GOVERNMENT OF BENGAL—MARINE DEPARTMENT.

NOTICE TO MARINERS—No. 194.

[Third Publication.]

INDIA, SOUTH-EAST—CEYLON COAST.

Chuttram—A fixed white light exhibited from a mast.

THE Presidency Port Officer, Madras, has given notice (No. 37 of 1902) that from and after 1st September 1902, a fixed white light, visible from all directions seawards, will be exhibited from a mast near "Chuttram" in longitude 80° 37′ and latitude 9° 12′ as a guide to vessels making the port of Pámban from the south.

E. J. BEAUMONT, COMDR., R.I.M.,
Port Officer of Calcutta.

Published for general information.

C. B. BAYLEY,
CALCUTTA, *the 30th June 1902.* *Asst. Secy., Marine Department.*

GOVERNMENT OF BENGAL—MARINE DEPARTMENT.

NOTICE TO MARINERS—No. 195.

[Third Publication.]

NEW ZEALAND—North island, east coast.

Poverty bay—Position of Hawea buoy altered.

With reference to Notice to Mariners No. 94, dated 12th April last, issued by this office, the British Admiralty has given further notice (No. 336 of 1902) that on 24th April 1902, the red buoy marking Hawea rock, Poverty bay, would be moved about 2¾ cables S. 46° E. to a position southward of the rocks recently discovered from which Gisborne flagstaff bears No. 4° E., distant 12$\frac{6}{10}$ cables, and Pah hill N. 65° E.

Approximate position of Gisborne flagstaff, lat. 38° 39¾′ S., long. 178° 2½′ E.

(*Variation 14° Easterly in 1902.*)

This Notice affects the following Admiralty Chart:—Poverty Bay, No. 6163: Also, New Zealand Pilot, 1901, page 150.

E. J. Beaumont, Comdr., r.i.m.,
Port Officer of Calcutta

Published for general information.

C. B. Bayley,
Calcutta, *the 5th July 1902.* *Asst. Secy., Marine Department.*

GOVERNMENT OF BENGAL—MARINE DEPARTMENT.

NOTICE TO MARINERS—No. 196.

Third Publication]

CHINA—Hong Kong.

Lye mun point—Position of light. Hong Kong harbour—Prohibited anchorage.

With reference to Notice to Mariners No. 68, dated the 10th March last, issued by this office, the British Admiralty has given further notice (No. 337 of 1902) that the position of the *fixed red* light, exhibited from a gibbet on the shore near Lye mun point, is 3½ cables N. 72° E. from Kung am.

Approximate position, lat. 22° 17½′ N., long. 114° 14½′ E.

Also, that anchorage is prohibited in the vicinity of the telegraph cable crossing the harbour from near the Admiralty Dock at Kaulung to a position west of north point Hong Kong. The prohibited area is marked by beacons which have been moved as under:—

At Kaulung—

The eastern beacon has been shifted 300 feet S. 79° E. from its former position.
The western beacon has been shifted 540 feet S. 72° W. from its former position.

At Hong Kong—

The eastern beacon has been moved 310 feet N. 55° E. from its former position.
The western beacon remains unaltered.

The red lights exhibited from these beacons are screened as before, viz., so that when two lights on the same side of the harbour are visible anchorage is prohibited.

Approximate position, lat. 22° 18′ N., long. 114° 10′ E.

(*Variation 1° Easterly in 1902.*)

This Notice affects the following Admiralty Charts:—Hong Kong, Nos. 1459, 1466: Also, List of Lights, part VI, 1902, Nos. 705, 706, page 127; China Sea Directory, vol. III, 1894, pages 77, 82, 83; and Supplement, 1898, page 9.

E. J. Beaumont, Comdr., r.i.m.,
Port Officer of Calcutta.

Published for general information.

C. B. Bayley,
Calcutta, *the 5th July 1902.* *Asst. Secy., Marine Department.*

GOVERNMENT OF BENGAL—MARINE DEPARTMENT.

NOTICE TO MARINERS—No. 197.

[Third Publication.]

PACIFIC OCEAN—PHILIPPINE ISLANDS, MINDANAO, SOUTH COAST.

Sibuguei and Dumankilas bays—Shoals.

WITH reference to Notice to Mariners No. 249, dated 28th September 1900, issued by this office, the British Admiralty has given further notice (No. 340 of 1902) that a shoal was seen about 3 miles N. 67° W. from Circe shoal in the entrance to Sibuguei bay.

Approximate position, lat. 7° 19′ N., long. 122° 36′ E.

It has been placed on the Charts as a rock with less than 6 feet over it.

Also, that four shoals, with apparently (for they were not examined) depths of 2 to 4 fathoms over them, were observed between Arayat shoal and point Dumankilas.

Approximate position, point Dumankilas, lat. 7° 28′ N., long. 123° 11′ E.

Approximate position, Arayat shoal, lat. 7° 16′ N., long 122° 57′ E.

A note to this effect has been placed on the Chart.

(*Variation 1° Easterly in 1902.*)

This Notice affects temporarily the following Admiralty Charts:—The Philippine islands No. 943; Sulu sea, No. 2578: Also, Eastern Archipelago, part I, 1890, pages 356, 357, 358 and Revised Supplement, 1898, page 69.

E. J. BEAUMONT, COMDR., R.I.M.,
Port Officer of Calcutta.

Published for general information.

C. B. BAYLEY,
Asst. Secy., Marine Department.

CALCUTTA, *the 5th July 1902.*

GOVERNMENT OF BENGAL—MARINE DEPARTMENT.

NOTICE TO MARINERS—No. 198.

[Third Publication.]

AUSTRALIA, SOUTH—ST. VINCENT GULF.

Port Adelaide and Glenelg jetty lights—Alterations postponed.

WITH reference to Notice to Mariners No. 8, dated 6th January 1902, issued by this office, the British Admiralty has given further notice (No. 341 of 1902) that the alterations contemplated in the lights at Semaphore jetty and Glenelg have been postponed, and that the *green fixed* light on the end of the Semaphore jetty and the *red fixed* light at the end of Glenelg jetty, port Adelaide, will continue to be exhibited until further Notice.

Approximate position, Semaphore jetty, lat. 34° 51′ S., long. 138° 29′ E.

This Notice affects the following Admiralty Charts:— St. Vincent and Spencer gulfs, Nos. 2389a, 2389b; approaches to port Adelaide, No. 1752; port Adelaide, No. 1750: Also, List of Lights, part VI, 1902, Nos. 1075, 1076; Australian Directory, vol. I, 1897, pages 326 and 324.

E. J. BEAUMONT, COMDR., R.I.M.,
Port Officer of Calcutta.

Published for general information.

C. B. BAYLEY,
Asst. Secy., Marine Department.

CALCUTTA, *the 5th July 1902.*

GOVERNMENT OF BENGAL—MARINE DEPARTMENT.

NOTICE TO MARINERS—No. 199.

[Third Publication.]

BAY OF BENGAL—CHITTAGONG COAST.

Karnafuli river—Dolphin shoal buoy adrift.

A TELEGRAPHIC communication has been received from the Port Officer, Chittagong, stating that Dolphin shoal buoy has gone adrift. It will be replaced shortly.

E. J. BEAUMONT, COMDR., R.I.M.,
Port Officer of Calcutta.

Published for general information.

C. B. BAYLEY,
Asst. Secy., Marine Department.

CALCUTTA, *the 5th July 1902.*

GOVERNMENT OF BENGAL—MARINE DEPARTMENT.

NOTICE TO MARINERS—No. 200.

[Third Publication.]

BAY OF BENGAL—BURMA COAST.

Rangoon river—Extension of the Middle Bank.

THE Bombay Government has given notice (No. 70 of 1902) that the Middle Bank has extended into the Channel between the Upper and Centre Buoys as under:—

(*a*) 18 feet reduced is 600 feet outside a line drawn between the above buoys.
(*b*) 14 feet reduced is 300 feet outside the above line.
(*c*) The extension is about half way between the above buoys and will be marked on 3rd or 4th June 1902 by a red conical buoy with a Staff and St. George's Cross moored between the Upper and Centre Middle Bank Buoys.

This Notice affects the Admiralty Chart:—Rangoon River and Approaches, No. 833, and Bay of Bengal Pilot, 3rd Edition, 1901, page 352.

E. J. BEAUMONT, COMDR., R.I.M.,
Port Officer of Calcutta.

Published for general information.

C. B. BAYLEY,
Asst. Secy., Marine Department.

CALCUTTA, *the 5th July 1902.*

GOVERNMENT OF BENGAL—MARINE DEPARTMENT.

NOTICE TO MARINERS—No. 201.

[Third Publication.]

INDIA, WEST—SIND COAST.

Karachi harbour—Breakwater light extinguished.

THE Bombay Government has given notice (No. 71 of 1902) that the fixed red light shown from the outer end of the Breakwater on Manora Point has been temporarily extinguished.

This Notice affects the Admiralty Chart:—Karachi Harbour, No. 40, and West Coast of Hindustan Pilot, 4th Edition, 1898, page 303.

E. J. BEAUMONT, COMDR., R.I.M.,
Port Officer of Calcutta.

Published for general information.

C. B. BAYLEY,
Asst. Secy., Marine Department.

CALCUTTA, *the 5th July 1902.*

REGISTERED No., C 209.]

No. 30 of 1902.

SUPPLEMENT TO
The Calcutta Gazette.

WEDNESDAY, JULY 23, 1902.

OFFICIAL PAPERS.

[*Non-Subscribers to the* GAZETTE *may receive the* SUPPLEMENT *separately on payment of five rupees per annum if delivered in Calcutta, or seven rupees and eight annas if sent by post.*]

CONTENTS.

	Page
RESOLUTION Reviewing the Triennial Report on the Working of the Charitable Dispensaries in Bengal and the Calcutta Medical Institutions for the years 1899, 1900 and 1901	1030
Resolution on the Reports on Inland Emigration for the year 1901	1043
Resolution on the Annual Report on the Reformatory Schools at Alipore and Hazaribagh for the year 1901 ...	1046
District Road Fund Accounts for the quarter ending the 31st March 1902	1048
Working of the Fire-Brigade in the Town and Suburbs of Calcutta and in the Municipality of Howrah during the year 1901-1902	1052
WEATHER and Crop Report for the week ending the 21st July 1902	1055
Prices-current (retail and wholesale) of food-grains and salt in the head-quarters station bazars of the districts of Bengal on the 15th July 1902	1059
Circular and Eastern Canal for the week ending Saturday the 19th July 1902	1066
Results of the Meteorological Observations taken at the Alipore Observatory from 13th to 19th July 1902 ...	1067
Bengal and North-Western Railway for the month of February 1902	1068
Segowlie-Raksaul Branch Railway for the month of February 1902	1070
Weekly Return of Traffic Receipts on Indian Railways ...	1072

RESOLUTION REVIEWING THE TRIENNIAL REPORT ON THE WORKING OF THE CHARITABLE DISPENSARIES IN BENGAL AND THE CALCUTTA MEDICAL INSTITUTIONS FOR THE YEARS 1899, 1900, AND 1901.

MUNICIPAL DEPARTMENT—MEDICAL.

Darjeeling, the 15th July 1902.

RESOLUTION—No. 1414T.—M.

READ—

The Triennial Report on the working of the Charitable Dispensaries in Bengal and the Calcutta Medical Institutions for the years 1899, 1900, and 1901.

Read also—

The Triennial Report for the years 1896, 1897, and 1898 and the Annual Returns for the years 1899 and 1900 and the Resolutions recorded upon them.

The Triennial Report has undergone considerable modification in consequence of the orders of the Government of India contained in the Resolution of the Home Department, No. 2741, dated 26th March 1901, and now presents a complete review of the working of all the medical institutions of the Province during the triennium. In spite of the inclusion of new material, the body of the report has been reduced by one-half.

2. The chapter on *Calcutta Medical Institutions* is new, the subject having hitherto been dealt with in a separate annual report. The increase in their number from 15 to 17 is due to the inclusion in 1900 of the Municipal and Dockyard dispensaries at Kidderpore. The out-patients for each of the three years numbered 219,302, 251,822, and 253,615, respectively, giving an average of 241,579, against 235,706 in the preceding triennium. The year 1900 was unhealthy, with a death-rate of 43·32 per mile, but in 1901 the increase of attendance was still maintained, although the general health had much improved. There was a considerable decrease of indoor patients, but the number of out-patients was kept up by the increased attendance of persons suffering from minor illnesses. This is an indication of the increasing popularity of the outdoor departments of the hospitals, of which the Medical College Hospital was the most conspicuous. The Inspector-General mentions three hospitals where the outdoor attendance fell off in 1901, and there seem to have been defects in the management, about which enquiries will be made.

The number of indoor patients was highest in 1900, owing to the unhealthy conditions of the year. In 1901 there was a decrease from 28,372 to 25,989. There is a considerable disproportion between the number of beds available and the requirements in the different hospitals. In the Campbell Hospital there are 752 beds, of which 428 were occupied on an average, and in the Presidency General Hospital there are 234, of which 154 were occupied. There were on an average 600 unoccupied beds in the different institutions. The popularity of the Sambhu Nath Pandit Hospital resulted in overcrowding both in 1900 and 1901, and further accommodation is being provided. The Dufferin Victoria Hospital in 1901 increased its number of patients from 158 to 382.

The rate of mortality among patients was 14·60, 17·57, and 15·70 in the three years. A disproportionately high ratio is returned every year from the Campbell and Howrah General Hospitals, but the Inspector-General is satisfied that this is due to the large proportion of moribund patients admitted into these institutions.

3. It is with satisfaction that the Lieutenant-Governor observes the restoration of public confidence in the hospitals which the plague scare in 1898 had seriously impaired. Evidence of this is given by the increase in the number of women and children treated from 39,706 and 47,977 in 1898 to 49,095 and 60,130, respectively, in 1901, and by the steady increase in the number of patients treated for local diseases and injuries, whose attendance is unaffected by the prevailing health conditions of the year.

4. In paragraph 18 of his report the Inspector-General gives some account of the diseases most prevalent during the triennium. There was a decrease in 1901 of malarial fever and dysentery cases. Cholera was epidemic in 1900 and small-pox in 1901. It is noticeable that disorders due to poisoning have steadily increased, and some inquiries are desirable on the subject. Explanation is needed of the considerable increase of tuberculous diseases and cases of cerebro-spinal fever, which are noticeable features of the period under report.

5. The nursing work at the principal hospitals receives favourable mention. The question of placing the nursing organisation on a more systematised footing, with the view of obtaining wider support from the public, is receiving the attention of Government.

6. *Charitable Dispensaries.*—The total number of dispensaries, outside Calcutta, on the Government list was 492 at the opening of the period under review and 558 at its close. The rate of increase during the preceding triennium has thus been more than maintained, and 128 new dispensaries have been opened in the last six years. The Inspector-General remarks that Bengal is behind other provinces in the number of such institutions in proportion to its population, and refers to his previous suggestion that there should be a dispensary at every thana and in every town or rural area with a population of 3,000 persons. The Lieutenant-Governor is of opinion that the progress made in recent years has, on the whole, been satisfactory. It is true that the existing dispensaries serve a larger area than in other provinces, and that the average attendance at each is lower than in any other province

except Bombay. This the Inspector-General attributes partly to the fact that the proportion of rural to urban population is greater in Bengal than in other parts in India. But a more potent reason, as has on former occasions been pointed out, is the fact that the medical demands of the Province are to a large extent met by the native practitioners, who are to be found in every town or large village, and who do a great deal of free work for the poor. During the last five years the outturn of qualified practitioners from the medical schools of Bengal was three times that of the medical schools of Bombay and the Panjab. It does not appear that much has been done to carry out the proposals to supply medicine-chests to village headmen, or to arrange for visits by dispensary officers to neighbouring markets, and the report contains so little information on these subjects that the Lieutenant-Governor invites the Inspector-General to give him more details as to the areas in which the experiment has succeeded. The plan was well meant, and experience may give useful suggestions.

Not only are dispensaries more numerous, but the number of patients treated has increased in a more than corresponding ratio. The total number of patients treated during the three years was 10,470,463, against 8,398,567 in the preceding triennium, showing a ratio per cent. of population of 4·72 against 3·95. During 1901 the percentage of population treated rose to 5·02. The chief increase was in outdoor patients, as in Calcutta, which is a proof that the attention to small amenities, and the respect to class and caste prejudices, which Colonel Hendley has assiduously inculcated, have resulted in an undoubted growth of popularity. This is also proved by the increased attendance of women and children by 28 and 31 per cent., respectively, over the numbers in 1897. As is natural, charitable relief is much more sought in urban than in rural areas. Some remarkable variations are, however, shown; the percentage of patients to population being as high as 351·13 in Noakhali and as low as 11·46 in Khardaha and 16·75 in Puri. The Inspector-General is making inquiries into the causes of these low returns, but it will probably be found due to the different methods of calculating the population served by the dispensaries.

The number of indoor patients increases slowly, and the daily average rose from 1,976 in 1899 to 2,177 in 1901. The number of beds available rose from 3,436 to 3,628. Attempts are being made to make the indoor wards more popular by providing separate quarters for pauper and moribund patients, and this has been done in 22 dispensaries. The Inspector-General attributes the increased attendance in certain institutions to improvements in administration and management, and the Lieutenant-Governor will gladly help to make these more general. The death-rate of 1901 was considerably lower than that of the preceding years—a result also attributed to improved management. There has been some increase of surgical work, but this is clearly capable of expansion. Credit is due to the officers whose names are specially mentioned in the report.

It is unsatisfactory to find that Civil Surgeons have been less active in inspections during the past year, and Government awaits the report on the subject which the Inspector-General proposes to furnish after taking the explanations of the officers in default.

7. The number of dispensaries managed by local bodies has considerably increased, the most noticeable feature being the rapid growth from 157 in 1898 to 205 in 1901 of institutions under the management of District Boards. The Lieutenant-Governor is pleased to see that the complaint made in the last triennial report of lack of interest on the part of local authorities is not repeated. The income contributed by local funds to medical institutions, which in 1898 was about 4¼ lakhs, amounted in 1901 to over 5¾ lakhs. In the matter of management, moreover, an improvement has been effected by placing every dispensary, where possible, under a committee, representative not only of the controlling local authority, but also of the general public. This policy has been generally carried out, though the Inspector-General mentions certain places which for no apparent reason are still backward in this matter. In some cases the Committees have not worked well, and it is hoped that Commissioners and District Magistrates will use their local influence to remedy such defects as have been noticed.

8. The main object of appointing Committees is to interest the public in the good management of the dispensaries and to increase subscriptions. The financial results of the triennium show that this arrangement has been to some extent successful. Of the total income of dispensaries, excluding the Calcutta institutions, which for the three years averaged Rs. 11,23,634, an average amount of Rs. 2,90,022, or 25·7 per cent., accrued from subscriptions, which now amount to over 3 lakhs, against 2½ lakhs in the preceding triennium. In addition to the subscriptions many special donations were received, which are not included in the returns. The Lieutenant-Governor fully concurs in Colonel Hendley's appreciation of these individual gifts, but he agrees with him that there should be a larger number of regular subscribers among all classes. This is particularly the case in Calcutta, where the average amount of subscriptions during the triennium was Rs. 14,486, or only a little over 1 per cent. of the average income, of which sum over Rs. 12,000 was subscribed by Europeans. Receipts from the native community, the Lieutenant-Governor regrets to observe, annually diminish. He is constrained to share Colonel Hendley's opinion that the income derived from charity is not worthy of the capital of India. Government contributed nearly 74 per cent. of the whole income of the Calcutta medical institutions. In the mufassal nearly 50 per cent. of the cost is borne by local funds, the income from which, as already indicated, shows a satisfactory increase. The average contribution from Government amounted to Rs. 1,15,140, or about 10 per cent. of the total income.

9. The expenditure on dispensaries has increased from Rs. 8,69,400 in 1898 to Rs. 10,40,168 in 1901. The increase is due mainly to the addition of new dispensaries and to the higher rate of contribution to the pay of Civil Assistant Surgeons, while additional miscellaneous expenditure was incurred on improvements in furniture and other matters intended to render the dispensaries more comfortable and attractive. The cash balance rose from Rs. 45,000 in 1898 to Rs. 1,41,485 in 1901. It is not clear why this balance, which in 13 per cent. of the total expenditure, should be so large. The investments of dispensaries increased during the three years by over 2½ lakhs. In Calcutta the charges were largely increased by heavy expenditure in each year on buildings, particularly in connection with the Medical College Hospital and the Presidency General Hospital. The opening of the new block in the latter Hospital, the additions to the staff, and other improvements have supplied a much-felt want.

10. The period covered by the review was one of considerable administrative progress. Among the reforms effected is the improvement in the position and prospects of the Subordinate Medical Service, which the Inspector-General confidently anticipates will have an important bearing on the working of hospitals and dispensaries. Among other innovations are the transfer of the control of Medical Education from the Director of Public Instruction to the Inspector-General of Civil Hospitals, the training of Civil Hospital Assistants in practical pathology and medico-legal work, and the abolition of the civil store of medicines maintained at district and subdivisional headquarters for Government servants.

11. The inspection work done by Colonel Hendley, and by Colonel McConaghey in the eight months during which he officiated as Inspector-General, was full and sufficient. The thanks of the Lieutenant-Governor are due to both, and especially to Colonel Hendley for his able administration of the Department. His report is a record of substantial and continuous progress.

By order of the Lieutenant-Governor of Bengal,

E. W. COLLIN,

Offg. Secretary to the Govt. of Bengal.

RESOLUTION ON THE REPORTS ON INLAND EMIGRATION FOR THE YEAR 1901.

GENERAL DEPARTMENT—EMIGRATION.

Darjeeling, the 15th July 1902.

RESOLUTION—No. 1108T.—G.

READ—

The Report of the Superintendent of Emigration, Calcutta, on Inland Emigration for the year 1901.

Read also—

The letters from the (1) Commissioner of the Bhagalpur Division, No. 729J., dated the 14th May, and No. 770J., dated the 28th May 1902, and (2) Commissioner of the Chota Nagpur Division, No. 249J., dated 26th May 1902, forwarding with their remarks the reports of the Superintendents of Emigration in their respective Divisions.

Introduction of the Assam Labour and Emigration Act, VI of 1901.

The year 1901 was important from the changes in the administration of inland emigration. The new Act, which consolidated and amended the law relating to emigration to the labour districts of Assam, came into force on the 9th March 1901, repealing Act I of 1882 and Act I (B.C.) of 1889; the changes made in the law were reviewed in this Government's Resolution No. 2153, dated the 3rd May 1901. A revised set of rules under the new Act was published for general information in the *Calcutta Gazette* of the 16th October 1901 under Notification No. 3412, dated the 15th idem.

2. The Superintendent of Emigration, Calcutta, has stated at length the action taken by Government to ensure the proper working of the new Act.

Arrangements for the working of the Act.

Five Superintendents of Emigration have been appointed for the following local areas, viz., (1) Ranchi and Palamau, (2) Singhbhum and Manbhum, (3) Hazaribagh, (4) the Sonthal Parganas, and (5) the remaining districts of Bengal. Since the close of the year a Travelling Superintendent has been appointed for Bengal and the Central Provinces. A whole-time officer was appointed Superintendent of Emigration and Registering Officer at Ranchi during the latter part of the year for the four busy months of the year, viz, December 1901 to March 1902.

In this Resolution the reports received from the Superintendent of Emigration in Calcutta as well as of the local Superintendents are reviewed.

3. For the first portion of the year emigrants were recruited as in former years—(i) by licensed contractors and recruiters, (ii) by special local agents, (iii) by garden sardars, and (iv) went to the labour districts as "free emigrants." The special local agents system of section 62 of Act I of 1882 ceased to exist with the introduction of Act VI of 1901; and a new system of recruitment by specially-employed garden sardars under Chapter V, section 90 of the new Act became legal from the 15th July 1901 in the districts of Manbhum, Hazaribagh, and the Sonthal Parganas.

Systems of recruitment.

4. Altogether 30,777 emigrants were despatched to the labour districts as against 65,190 in the previous year; 27,250 embarked at Goalundo and 3,527 at Jatrapur; Assam received 21,663, Cachar 2,596, and Sylhet 2,991 as against 46,635, 6,838, and 11,717 respectively in 1900. The great diminution is partly explained by the fact that the year 1900 was a famine year in Chota Nagpur, and is also ascribed by the Commissioner of that Division to wild stories having been circulated exaggerating the responsibilities incurred by garden sardars under the new Act. There is a further and, to the planter, more serious reason. Coal-mines in Bengal have increased rapidly of late both in number and in size, and the mine-owner is now a formidable competitor

Number of emigrants.

with the tea-planter in the districts of labour-supply. He gives higher wages, and the mines have at least the attraction of being nearer the districts of recruitment.

Recruiting agencies.

5. Adding to the number of contractors, recruiters, and agents returned by the Superintendent of Emigration, Calcutta, the numbers reported by the local Superintendents, it would appear that there were at work during the year 13 contractors with 10 sub-contractors, 161 licensed recruiters, 24 special local agents who were licensed under the old Act, I of 1882, and continued to work until their licenses expired, and 37 local agents, as compared with 2 contractors, with 16 licensed recruiters, 17 special local agents, and 11 local agents in the preceding year. It may be, however, that individuals were licensed as contractors in more than one area, and that some have therefore been *twice* counted.

The increase in the number of recruiters' licenses is considered by Dr. Forsyth to be indicative of the good effect of the warning given to contractors not to avail themselves of the services of unlicensed recruiters.

The number of garden sardars and sardarnis at work in the recruiting districts fell from 4,045 in 1900 to 3,902 in 1901. During the latter part of the year 17 garden sardars with special permits under Chapter V of the new Act were sent to the Chota Nagpur Division, but they despatched no emigrants before the close of the year.

Classification of emigrants.

6. Of the 30,777 emigrants despatched to the labour districts, 11,631, or 34 per cent., as against 40 per cent. in 1900 went as free emigrants; 6 per cent. as against 2 per cent. in 1900 were recruited by the licensed contractors; and 7 per cent. as against 12 per cent. in 1900 by the special local agents; garden sardars recruited 15,041 emigrants, or 48 per cent of the whole number, as compared with 29,493, or 45 per cent., in the previous year. The districts in Bengal outside the Chota Nagpur Division and the Sonthal Parganas contributed only 2,278 of the registered emigrants. The great decrease in the number of "free" emigrants, who numbered 26,300 in 1900, is attributed by the Superintendent of Emigration, Calcutta, to the prohibition of recruiting otherwise than under Chapters III and IV of the Act in the districts of the Chota Nagpur Division, the Sonthal Parganas, and in the Central Provinces, but is no doubt also due to the abolition of registration at Dhubri.

According to the reports of the Superintendents of Emigration, only 5,894 labour contracts were executed during the year, but it is possible that there has been some mistake in the figures furnished, as out of the total number of emigrants despatched to the labour districts, 19,146, including dependants, were registered under the Act. The Superintendent of Emigration, Calcutta, will be asked to explain, in consultation with the other Superintendents, this apparent discrepancy.

Casualties *en route* and sanitary arrangements.

7. Between recruitment and embarkation 255 casualties were ascertained, of which 7 only were deaths, as against 132 deaths in the preceding year. The reduction in the number of casualties on the river journey was very marked, being only 36, or ·11 per cent., as against 227, or ·34 per cent., in 1900. The deaths on the river journey were 26, or ·08 per cent., as against 214, or ·32 per cent., in the previous year.

This result was due to the careful measures adopted for the well-being of the emigrants in transit. Special care was taken by the officials who inspected the depôts, places of accommodation, and rest-houses to see that they were kept clean and well ventilated; that the food and water-supply for drinking, culinary, and ablution purposes were good and sufficient; and that the accommodation and latrine arrangements were satisfactory. Vaccination was carefully and efficiently performed. In all the districts the health of the recruits was good, and there was no epidemic among them of any kind either in the depôts or on the river journey.

Measures taken to ensure the registration of emigrants in the district of recruitment.

8. Special measures were taken to ensure the proper working of sections 33 and 34 of Act VI of 1901, which require registration of emigrants in the district of recruitment. On its being reported that persons acting ostensibly

under section 92 of the Act were sending coolies to licensed recruitors in other districts who registered and put them under contract, contractors were warned that their recruiters must communicate direct with emigrants from the first without the intervention of any third party. They are not prohibited from recruiting within the local areas for which they are licensed emigrants residing elsewhere who come to such areas of their own accord, but they are not permitted to employ intermediaries to bring emigrants to them from other local areas. It was pointed out to contractors that if they make use of such assistance, their licenses and those of their recruiters are liable to be cancelled.

In all districts enquiries were made by the registering officers before-registration of non-resident emigrants, and in some cases registration was refused. Before registration of single women is allowed, statements of the recruiter and of other emigrants of the party are recorded. Of the 1,907 emigrants registered by contractors, the largest number, viz., 1,347, or 70 per cent., were again registered in the 24-Parganas. In spite of the precautions taken to have registrations effected in the districts of recruitment, only a small proportion of the emigrants registered in the 24-Parganas and at Raniganj were residents of those districts; and the registration of non-resident emigrants at Calcutta, Howrah, and Raniganj still requires careful attention,

9. The Lieutenant-Governor is glad to observe that licenses were granted after careful enquiry by the Superintendents of Emigration. In Manbhum and Singhbhum a list of licensed contractors and recruiters was communicated to each police thana and outpost. The police were also ordered to instruct the village chaukidars at the weekly parades to see that no person without a recruiter's license is permitted to do any recruiting; and the Emigration Officer at Purulia and the Government Railway Police were ordered to watch the trains and other routes so that no free coolies may be despatched by rail or otherwise except in accordance with the rules made under the Act.

Measures adopted for stopping uncontrolled professional recruiting.

In order to check unlicensed recruiting in the Sonthal Parganas, the Commissioner of Bhagalpur has directed that a list of the licensed recruiters be sent to all thanas, parganaits, and other leading persons once in six months, so that it may be known who are licensed to recruit, and that information may be given about unlicensed recruiters.

Several cases of infringement of rules having been reported by the Emigration Officers at Katihar, Goalundo, and Jatrapur in respect of railway coolies, the provisions of the law were pointed out to the Agent, Assam-Bengal Railway, and he was requested to instruct the railway contractors and labour agents to build and maintain properly-equipped rest-houses at the several halting places on the emigration routes.

10. On the whole it may be said that the year was one of transition to a state of more complete supervision and control of recruitment in those districts, viz, the Sonthal Parganas and the districts of Chota Nagpur, in which past experience has shown increased supervision to be necessary in order to prevent abuses of recruiting among simple and ignorant people.

By order of the Lieutenant-Governor of Bengal,

W. C. MACPHERSON,

Offg. Secretary to the Govt. of Bengal.

RESOLUTION ON THE ANNUAL REPORT ON THE REFORMATORY SCHOOLS AT ALIPORE AND HAZARIBAGH FOR THE YEAR 1901.

GENERAL DEPARTMENT—EDUCATION.

Darjeeling, the 16th July 1902.

RESOLUTION—No. 1382T.—G.

READ—

The Annual Report on the Reformatory Schools at Alipore and Hazaribagh for the year 1901.

The Annual Report on the Reformatory Schools at Alipore and Hazaribagh has this year been curtailed in accordance with the instructions issued. The Lieutenant-Governor has no objection to the maximum length of the report being fixed at six instead of four pages.

This is the second year of the working of the two Schools under the Education Department.

2. *Admissions.*—It is satisfactory to observe that the number of admissions fell from 128 in 1900 to 120 in 1901, but the number is still large as compared with the admissions in 1898 and 1899. The Boards of Management, as desired in last year's Resolution, examined the admissions for 1900 to ascertain whether any of the boys could not be more suitably dealt with under the provisions for youthful offenders. The result of this examination led to the release of 4 boys from the Hazaribagh School. The Lieutenant Governor requests that the Boards of Management will continue to carefully scrutinise all admissions, and report to Government any cases of boys who, in their opinion, could have been more suitably discharged on probation of good conduct under section 562 of the Criminal Procedure Code or after due admonition under section 31 of the Reformatories Act of 1897. It has been ascertained from the judicial returns for the year that 256 offenders, probably in most cases juvenile, were dealt with during the year under section 562 of the Criminal Procedure Code, and 44 were discharged after admonition or were delivered to parents and guardians under section 31 of Act VIII of 1897. With reference to the Director's remark that the Board of Management of the Alipore School are of opinion that it is not desirable to send boys to a Reformatory on first conviction, or boys below ten years of age, it must be pointed out that the Lieutenant-Governor has decided that no such absolute instructions can properly be issued to the Courts.

3. *Health, Discipline, and Education.*—The health of the boys in both Schools was good; the admissions to hospital in the Hazaribagh School showed a slight increase. Punishments were more frequent in the Alipore School than at Hazaribagh, and discipline appears not to be so good in the former School. Satisfactory progress has been made in both Schools in elementary education; drill and gymnastics are included in the training, and games are played.

4. *Industries.*—In accordance with the system inaugurated last year of concentrating, as far as possible, boys of agricultural castes at Hazaribagh and those of industrial castes at Alipore, 41 boys were regularly employed at Hazaribagh on cultivation and 21 boys on market-gardening, but at certain seasons of the year nearly all the boys were employed on agricultural work. These arrangements are in accordance with the Lieutenant-Governor's orders, but there has been great delay in giving effect to them in the Hazaribagh School. In the Resolution of 13th September the teaching of market-gardening was enjoined. A cultivator to teach market-gardening was not got till June 1901, and then was badly selected and was a failure. Government has not been able to approve the proposal of the Hazaribagh Board of Management to engage a gardener from Saharanpore. The object is not to teach the boys floriculture and horticulture, but to make them expert market-gardeners, and for this purpose a good market-gardener of the Koeri caste from the neighbourhood or from Bankipore is to be preferred to a Saharanpore gardener.

There was a considerable decrease at both Schools in the profits from manufactures. This was fully anticipated in the orders passed on the reports

for 1899 and 1900, when it was directed that industries should be taught to the boys, preferably the trades of their castes which would be useful to them in after life. Local conditions may vary, however, and it is the duty of the Boards of Management to look out for openings for the boys. It was stated in last year's Resolution that the Lieutenant-Governor took no exception to the diminution of profits from industries. He desires to say again emphatically that such a diminution of profits should not be weighed against the reform which he has enjoined; and he regrets to notice that the Board of Management and the Superintendent at Alipore did nothing during the year to carry out a reform which he has had much at heart. Seventy-two boys were taught carpentry at Alipore in 1901, against 60 in 1900; 19 were taught tinsmithing, against 8; and 48 were taught book-binding, against 40. It is certain that there was no such increase in the number of lads, who are carpenters and book-binders by caste, and that boys of those castes did not reach anything like the numbers taught these trades. Were these boys taught the trades that would be likely to be useful to them when they left the School? From page 4 of the report it appears that out of 125 boys released from Alipore in the years 1898 to 1900, only 13 are now following the trades taught to them in the School. The figures above cited for the year under review show that this ill-success is likely to be aggravated, and the Lieutenant-Governor again calls the very special attention of the Director and of the Board of Management to the subject.

5. *Licensing.*—In last year's report it was stated that the Board of Management, Alipore, had taken no action in the important matter of licensing boys out. The Lieutenant-Governor is therefore pleased to learn that during the year under review 5 boys from the Alipore School were licensed out for work in the Upper Hooghly Mills, and that there is a probability of the system being extended. It is not stated whether these boys were wanted for carpentry or for weaving, and the presence of this opening for employment accentuates the apparent absence of any arrangement to prepare lads for it. The Lieutenant-Governor is gratified to learn that during the year under review 34 boys as against 12 last year were licensed out from the Hazaribagh School, and he congratulates the Board on the intelligence and care with which they have ordered the arrangements of the School. When, as apparently at Hazaribagh, an exhaustless field is opened out for employment in mining, carpentry, and blacksmith's work, it is quite a matter for the Board's consideration, if they are satisfied as to the stability of the opening, to prepare more directly for it. It is true that this would be a divergence from the plan, by which the Hazaribagh School was to be a school for agriculture. But the whole object of the Schools is to fit the lads to earn an honest livelihood; and if local conditions give a really valuable opening to that end in other directions, the Lieutenant-Governor has no objection whatever to deviation from the general plan to utilize it. He trusts that the licensing system will become more popular. No corresponding advantage is to be gained by resort to the ancient apprenticing system of 1850. By the apprentice system no wage, but only board, lodging, clothing, and instruction is secured for the boy. It is the direct aim of the School that the boy should go out instructed.

6. *Training of Boys.*—The efforts of the Educational Department to follow up the history of every boy for three years after his release were more successful during the year under review than in the previous year. The percentage of failure to trace out the boys after their release to the total number discharged in 1900 was 24 per cent. as against 34 and 33 per cent. in the years 1899 and 1898. The results are not, however, as satisfactory as the Lieutenant-Governor had hoped for. With an agency like the Educational Department, which commands the sympathy of the people at large, there should be no excuse for failure to trace out and account for nearly the whole number of boys released. The Lieutenant-Governor trusts that the procedure now adopted of releasing boys in the presence of an Educational officer may lead to better results, but success depends on the personal zeal and interest taken in the matter by the Educational officer himself.

By order of the Lieutenant-Governor of Bengal,

W. C. MACPHERSON,

Offg. Secretary to the Govt. of Bengal.

DISTRICT ROAD FUND ACCOUNTS FOR THE QUARTER ENDING 31st MARCH 1901.

No. 3518R.C.

Government of Bengal,

PUBLIC WORKS DEPARTMENT.

ROAD CESS.

Dated Calcutta, the 18th July 1902.

RESOLUTION.

READ—

Letter from the Accountant-General, Bengal, No. 286A.C., dated the 7th July 1902, submitting statement of receipts and expenditure of the several District Road Committees in Bengal for the quarter ending 31st March 1902.

RESOLUTION.—The Lieutenant-Governor directs that the accounts of the receipts and expenditure of the several District Road Committees in Bengal for the fourth quarter of the year 1901-1902 be published in the *Calcutta Gazette* and circulated to the officers concerned.

ORDER.—Ordered that a copy of this Resolution, together with a copy of the statement of receipts and expenditure, be published in the Supplement to the *Calcutta Gazette*.

Ordered also that a copy of this Resolution, and of the statement referred to, be forwarded, for information, to the Commissioners of the Rajshahi, Chittagong, Bhagalpur, and Chota Nagpur Divisions; Superintending Engineers of the Northern and Western Circles; Inspectors of Works, Eastern and Bhagalpur Circles, and to the Financial Department of this Government.

By order of the Lieutenant-Governor of Bengal,

W. A. INGLIS,

Offg. Secretary to the Government of Bengal.

STATEMENT OF RECEIPTS AND EXPENDITURE OF THE SEVERAL DISTRICT ROAD COMMITTEES FOR THE QUARTER ENDING 31ST MARCH 1902.

DISTRICT

Statement of Receipts and Expenditure of the several District

RECE

	District.	Balance in Treasury on 1st January 1902.	Provincial Rates.			Interest on arrears of Road Cess.	Miscellaneous.			Irrigation.	Civil		
			Cess on Lands.	Cess on Mines and Railways.	Total.		Fees, Fines and Forfeitures.	Miscellaneous.	Total.	Canal Tolls.	Miscellaneous.	Contributions from private persons.	Receipts from Staging Bungalows.
	1	2	3	4	5	6	7	8	9	10	11	12	13
		Rs. A. P.	Rs. A. P.	Rs. A. P.	Rs. A. P.			Rs. A. P.	Rs. A. P.		Rs. A. P.	Rs. A.	Rs. A. P.
Cess districts.	Darjeeling ...	9,700 4 11	14,825 10 0	414 15 6	15,240 0 6	.....	.....	.....	.....	.....	.....	.....	.....
	Singhbhum ...	3,040 9 9	1,875 8 1	4,268 10 1	6,144 2 2	.....	100 0 0	683 2 3	783 2 3	.....	.....	.....	1 0 0
	Total ...	12,740 14 8	16,701 2 1	4,683 0 7	21,384 11 8	.....	100 0 0	683 2 3	783 2 3	.....	.....	.....	1 0 0
Non-cess districts.	Chittagong Hill Tracts.	24,558 14 8	.....	.....	.....	.....	.....	411 14 10	411 14 10	.....	.....	.....	.....
	Sonthal Parganas.	65,181 14 0	.....	.....	.....	.....	92 4 10	3 0 0	95 4 10	.....	478 2 1	.....	160 8 0
	Total ...	89,740 12 8	.....	.....	.....	.....	92 4 10	414 14 10	507 3 8	.....	478 2 1	.....	160 8 0
	Grand Total ...	1,02,481 11 4	16,701 2 1	4,683 0 7	21,384 11 8	.....	192 4 10	1,098 1 1	1,290 5 11	.....	478 2 1	.....	161 8 0

EXPEN

	District.	Refunds.			Land Revenue.	Provincial Rates.			Interest.	Administration.	Medical.	Stationery.	Miscellaneous.		
		Cess.	Other Receipts.	Total.	Public Miscellaneous Improvements.	Establishment and Contingencies of Office of Collection.	Revaluation Establishment.	Total.	Interest on Temporary Loans.	Establishment and Contingencies of Committee's Office.		Printing at private Presses.	Miscellaneous.	Provident Fund Contribution.	Total.
	1	2	3	4	5	6	7	8	9	10	11	12	13	14	15
					Rs. A. P.	Rs. A. P.	Rs. A. P.	Rs. A. P.	Rs. A. P.	Rs. A. P.	Rs. A. P.	Rs. A. P.	Rs. A. P.	Rs. A. P.	Rs. A. P.
Cess districts.	Darjeeling ...	.....	.....	... ..	.....	308 7 3	1 0 0	309 7 3	1,932 12 5	559 13 11	—700 0 0	137 11 1	.....	.....	.....
	Singhbhum ...	..	... ..	... ..	.....	93 3 3	6 7 3	99 10 6	..	117 0 0	.....	101 4 1	55 13 3	73 4 0	128 1 3
	Total ...	.....	... ..	... .	.....	401 10 6	7 7 3	409 1 9	1,932 12 5	676 13 11	—700 0 0	238 15 2	55 13 3	73 4 0	128 1 3
Non-cess districts.	Chittagong Hill Tracts.	... ..	...	.....	.....	.....	.....	.....	.....	16 4 3	.....	100 0 0	... ..	46 12 0	46 12 0
	Sonthal Parganas.	.....	.....	... ..	7,661 15 10	.....	... ..	. ..	.....	467 12 6	.....	243 7 7	—19 8 0	5 8 0	—14 0 0
	Total ..	.....	.....	... .	7,661 15 10	.....	.....	.....	.....	484 0 9	...	340 7 7	—19 8 0	52 4 0	32 12 0
	Grand Total ...	... ..	. .	... ..	7,661 15 10	401 10 0	7 7 3	..	1,932 12 5	1,160 14 8	—700 0 0	588 6 9	36 5 3	124 8 0	160 13 3

Calcutta
The 6th June, 1902

ROAD FUND.

Road Committees for the quarter ending 31st March 1902.

IPTS.

Works.											
Ferry Tolls.	Total.	Grants from Government.	Advances.	Deposits.	Loans from Government.	Total Receipts.	Balance of imprest in hands of Engineer and others decreased.	Balance of uncashed cheques, increased.	Total Receipts, including Balance.	Outlay.	Balance in Treasury on 31st March 1902.
14	15	16	17	18	19	20	21	22	23	24	25
Rs. A. P.	Rs. A. P.	Rs. A. P.	Rs. A. P.	Rs. A. P.		Rs. A. P.	Rs.	Rs. A. P.	Rs. A. P.	Rs. A. P.	Rs. A. P.
.....	.....	417 9 11	7,583 0 4	.....	.....	23,241 3 9	.....	774 12 0	33,716 4 8	17,917 14 8	15,798 8 0
.....	1 0 0	789 13 4	2,200 0 0	250 0 0	.....	10,168 0 9	150	.....	13,358 10 6	10,078 4 4	3,280 6 2
.....	1 0 0	1,207 6 3	9,783 0 4	250 0 0	.....	33,409 4 6	150	774 12 0	47,074 15 2	27,996 3 0	19,078 12 2
.....	.....	1,000 0 0	.....	.....	.....	1,411 14 10	.....	10,131 7 11	36,102 5 5	21,036 0 9	15,066 4 8
42 4 0	680 14 1	7,149 0 4	4,687 10 4	6,073 1 3	.....	18,685 14 10	.....	18,536 6 8	1,02,404 3 6	55,461 1 11	46,943 1 7
42 4 0	680 14 1	8,149 0 4	4,687 10 4	6,073 1 3	.....	20,097 13 8	.....	28,667 14 7	1,38,506 8 11	76,497 2 8	62,009 6 3
42 4 0	681 14 1	9,356 6 7	14,470 10 8	6,323 1 3	.....	53,507 2 2	150	29,442 10 7	1,85,581 8 1	1,04,493 5 8	81,088 2 5

DITURE.

Minor Works and Navigation.	Public Works.							Contribution from Local to Provincial.	Advances.	Deposits.	Temporary Loans.	Total Expenditure.	Balance of imprest in hands of Engineer and others, increased.	Balance of uncashed cheques decreased.	Total Outlay.
Canal, Toll Establishment and Contingencies.	Original Works.	Repairs.	Establishment.	Petty Establishment.	Tools and Plant.	Refunds.	Total.								
16	17	18	19	20	21	22	23	24	25	26	27	28	29	30	31
	Rs. A. P.	Rs. A. P.	Rs. A. P.	Rs. A. P.	Rs. A. P.		Rs. A. P.	Rs.	Rs. A. P.	Rs. P.	Rs. A. P.	Rs. A. P.			Rs. A. P.
.....	.....	9,989 1 1	5,239 12 6	.....	.....	...	10,228 13 7	700	3,026 8 0	.....	1,722 12 5	17,917 14 8	...	.....	17,917 14
.....	3,446 14 5	4,645 3 4	890 2 9	94 0 0	.....	150	9,225 4 6	.....	.....	397 0 0	.....	10,078 4 4	...	...	10,078 4
.....	3,446 14 5	14,634 4 5	1,138 15 3	94 0 0	.....	150	19,454 2 1	700	3,026 8 0	397 0 0	1,722 12 5	27,996 3 0	...	.....	27,996 3
.....	.....	18,494 10 7	1,072 5 11	.....	50 0 0	...	20,517 0 6	.....	—150 3 0	500 0 0	.....	21,036 0 9	...	...	21,036 0
.....	10,627 9 2	16,390 14 2	4,729 13 1	136 15 6	407 9 1	...	32,292 13 0	.....	2,677 7 5	12,131 9 7	.....	55,461 1 11	...	...	55,461 1
.....	10,627 9 2	34,885 8 9	6,702 3 0	136 15 6	457 9 1	...	52,809 13 6	...	2,527 7 5	12,631 9 7	.....	76,497 2 8	...	.....	76,497 2
.....	14,074 7 7	49,519 13 2	7,841 2 3	230 15 6	457 9 1	150	72,273 15 7	700	5,553 15 5	12,028 9 7	1,722 12 5	1,04,493 5 8	...	.....	1,04,493 5

W. H. Michael,

Accountant-General, Bengal.

WORKING OF THE FIRE-BRIGADE IN THE TOWN AND SUBURBS OF CALCUTTA AND IN THE MUNICIPALITY OF HOWRAH DURING THE YEAR 1901-1902.

NOTIFICATION—No. 1454T.—M.

The 18th July 1902.—The following is published for general information.

E. W. COLLIN,
Offg. Secy. to the Govt. of Bengal.

No. 8034, dated Calcutta, the 25th June 1902.

From—R. A. D'O. BIGNELL, ESQ., Commissioner of Police, Calcutta,
To—The Secretary to the Government of Bengal, Municipal Department.

I HAVE the honour to submit, in accordance with section 41, Act I of 1893, the following report on the working of the Fire Brigade in the Town and Suburbs of Calcutta and in Howrah during the year 1901-1902.

2. The force at the close of the year under review was as follows —

Lall Bazar.	*Howrah.*	*Bhowanipore.*
1 Superintendent.	1 Engineer.	2 Tindals.
1 Chief Engineer.	1 Native Driver.	12 Khalasis.
2 Assistant Engineers.	5 Tindals.	—
1 European Driver.	1 Fireman.	14
3 Tindals.	18 Khalasis.	—
2 Native Drivers.	3 Syces.	
1 Fireman.	—	
18 Khalasis.	29	
13 Syces.	—	
1 Inspector of Jute Warehouses.		
—		
43		
—		
Watgunge.	*Chitpur.*	*Palmer's Bridge.*
2 Tindals.	1 Engineer.	2 Tindals.
12 Khalasis.	1 Native Driver.	12 Khalasis.
—	2 Tindals.	—
14	1 Fireman.	14
—	12 Khalasis.	—
	3 Syces.	
	—	
	20	
	—	

Hose Carts with 400 feet of hose are also kept at the Sukea's Street, Fenwick Bazar, Jora Bagan, Coomertolly and Alipore Police Stations for emergencies.

A statement showing the receipts and expenditure of the Fire Brigade is annexed to this report. The year opened with a balance of Rs. 19,750-3-11, the receipts amounted to Rs. 85,951-5-3. The total expenditure during the year amounted to Rs. 87,755-9-3, leaving a balance of Rs. 17,945-15-11 at the close of the year.

The increase of expenditure under the head "Establishment" is due to the pay of the khallasis being raised from Rs. 7 to Rs. 8 under Government orders.

The savings under the head of contingencies is principally due to the fact that Rs. 2,300 worth of coal and clothing ordered during the year was undelivered, and therefore not paid for. There was also a saving of Rs. 900 from the sum budgeted for the purchase of hose, and Rs. 650 for the purchase of horses and Rs. 802 for the repair of the Howrah Fire Station, the total savings being Rs. 5,324-12-8.

Rupees 1,500 due to the Calcutta and Rs. 50 to the Manicktollah Municipalities for cost of collection, remained undisbursed at the close of the year, the total decrease under the head of "Other charges" being Rs. 1,663-14-2.

The receipts under the heads of "Hire of Fire Engine," "sale-proceeds of unserviceable hose" and "of horses" considerably improved, and these, together with the decrease already noted, are responsible for the large closing balance.

3. The following table gives the number of fires and the way they were dealt with :—

Description of fire.	Number of fires.	Number of fires attended by Fire Brigade.	Number of fires extinguished by residents.	Number of fires attended by Port Fire Engine.	Remarks.
1	2	3	4	5	6
Fires at which property destroyed valued at Rs. 50 or more.	42	27	12	*3	* Fire Brigade also attended at these fires.
Fres at which property destroyed valued at less than Rs. 50.	82	16	64	†2	† Steam Engine "Damooda" attended in one case.

4. Ten of these fires occurred in buildings licensed under Act I (B.C.) of 1893 and Act I of 1894, in which property to the total value of Rs. 6,37,400 was destroyed.

5. The total estimated value of property destroyed by fire was Rs. 9,17,632-8 against Rs. 8,80,265-10, the value of the property destroyed in 1900-1901.

6. No lives lost during the year at fires, but two of the European crew of the S. S. "Forth" that caught fire at the Hooghly Docks, Howrah, were severely burnt and had to be removed to hospital, where they recovered.

7. The following were the most serious fires :—

(*a*) On the 3rd December 1901, a masonry building at Ghoosary, Howrah, containing cotton and machinery caught fire and burnt for seven hours and forty minutes. Estimated loss Rs. 80,000.

(*b*) On the 22nd December 1901, five jute godowns containing jute caught fire at Sulkea, Howrah, and burnt for seven hours. Estimated loss Rs. 1,00,000.

(*c*) On the 7th January 1902, a fire broke out at Watson's Patent Hydraulic Jute Press at Bag Bazar and lasted for two days and a half. Estimated loss Rs. 3,95,000.

(*d*) On the 21st February 1902, the contents of masonry jute godowns in Chitpore caught fire and burnt for five hours and forty-five minutes. Estimated loss Rs. 9,300.

(*e*) On the 24th February 1902, the S. S. "City of Bombay" laden with jute, cotton, gunny and rice, caught fire in the Kidderpore Docks; the fire lasted for 7 hours and 15 minutes. Loss estimated at Rs. 1,05,000.

(*f*) On March 5th, 1902, a masonry jute godown on Dhurmahatta Street caught fire. Loss estimated at Rs. 1,500. Fire lasted for five and a half hours.

(*g*) On the 7th March 1902, the flat "Debong" laden with jute caught fire in the Kidderpore Docks. The fire lasted for twenty-three hours. Estimated loss Rs. 1,40,000.

(*h*) On the 27th March 1902, a masonry godown containing jute caught fire at Shibpore, Howrah, and burnt for thirteen hours and forty-five minutes. Estimated loss Rs. 50,000.

8. Four licenses were granted under section 36, Act I of 1893 for letting off fire-works, rockets, &c. None of the licenses were suspended under Section 37 of the Act.

9. Two prosecutions were instituted under Act IV of 1884 for manufacturing fireworks without licenses : in both cases the accused were convicted and fined.

Statement showing the actual receipts and disbursements of the Fire Brigade Fund for the year ending 31st March 1902.

Receipts.	Budget estimate for 1901-1902.	Actual receipts for 1901-1902.	Increase.	Decrease.	Remarks.
1	2	3	4	5	6
	Rs. A. P.	Rs. A. P.	Rs. A. P.	Rs. A. P.	
Balance at the beginning of the year	.....	19,750 3 11	.....	.....	
Proportionate cost payable by corporation of Calcutta.	61,115 0 0	61,115 0 0	.....	.....	
Cossipore-Chitpore Municipality ...	15,176 0 0	15,176 0 0	.....	.....	
Manicktola	820 0 0	820 0 0	.....	.....	
Howrah	4,512 0 0	4,512 0 0	.....	.....	
Garden Reach	410 0 0	410 0 0	.....	.....	
Total ...	82,033 0 0	82,033 0 0	.....	.....	
Fees for licenses for letting off Fire-Works ... ... Town	.....	.....	.....	.....	
Ditto ... ... Suburbs	.....	.....	.....	.....	
Fees under Petroleum Act ...	700 0 0	607 0 0	.....	93 0 0	
Total ...	700 0 0	607 0 0	.....	93 0 0	
Fines under Petroleum Act ...	50 0 0	10 0 0	.....	40 0 0	
Ditto Fire Brigade Act ...	100 0 0	.....	.....	100 0 0	
Ditto Jute Ware House Act	.....	.....	.....	.....	
Total ...	150 0 0	10 0 0	.....	140 0 0	
Hire of Fire Engines	20 0 0	221 0 0	201 0 0	.....	
Rent of Telephone lines	302 0 0	302 8 0	0 8 0	.....	
Sale proceeds of unserviceable Fire Engine, Hose, &c.	100 0 0	2,171 0 0	2071 0 0	.....	
Miscellaneous	20 0 0	16 13 3	.....	3 2 9	
Total ...	442 0 0	2,731 5 3	2,269 5 3	.....	
Sale proceeds of horses	.....	350 0 0	350 0 0	.....	
Water pressure	.....	240 0 0	240 0 0	.....	
Total ...	.....	590 0 0	590 0 0	.....	
Grand Total ...	83,325 0 0	1,05,701 9 2	2,626 5 3	.....	

Payments.	Budget estimate for 1901-1902.	Actual charges for 1901-1902.	Increase.	Decrease.	Remarks.
7	8	9	10	11	12
	Rs. A. P.	Rs. A. P.	Rs. A. P.	Rs. A. P.	
Establishment—					
Lall Bazar	20,571 0 0	20,365 12 0	.....	205 4 0	
Howrah	5,037 0 0	5,152 3 10	115 3 10	.....	
Bhowanipore	1,308 0 0	1,421 0 0	113 0 0	.....	
Watgunge	1,308 0 0	1,421 0 0	113 0 0	.....	
Palmer's Bridge	1,308 0 0	1,421 0 0	113 0 0	.....	
Chitpore	4,251 0 0	4,325 4 3	74 4 3	.....	
Total ...	33,783 0 0	34,106 4 1	223 4 1	.....	
Contingencies	56,670 0 0	51,345 3 4	.....	5,324 12 8	
Other charges	3,968 0 0	2,304 1 10	.....	1,663 14 2	
Total ...	60,638 0 0	53,649 5 2	.....	6,988 10 10	
Grand Total ...	94,421 0 0	87,755 9 3	.....	6,665 6 9	
Closing Balance	.....	17,945 15 11	.....	.....	
Total ...	.....	1,05,701 9 2	.....	.....	

Calcutta;

The 25th June 1902.

R. BIGNELL,

Commissioner of Police.

WEATHER AND CROP REPORT.

For the week ending on 21st July 1902.

Burdwan.—Rainfall at Sadar 1·01, Kalna 0·66, Katwa 0·75, Raniganj 4·50. Weather cloudy. Ploughing continues. Transplantation going on in places. Fodder and water sufficient. Condition of cattle good. Common rice sells at 12 seers per rupee.

Birbhum.—Rainfall at Sadar 5 17, Rampur Hât 4·52. Weather unsettled. More rain wanted. Sugarcane promising. Fodder sufficient. Common rice sells at 12 seers per rupee.

Bankura.—Rainfall at Sadar 4 93. Vishnupur 1·95. Weather seasonable. Heavy showers on 20th and 21st morning. Transplantation going on well. Sugarcane growing well. Fodder and water sufficient. Common rice sells at 12½ seers per rupee.

Midnapore.—Rainfall at Sadar 1·90, Contai 3·52, Tamluk 1·95, Ghatal 3·04. More rain wanted in Tamluk and part of Sadar. Transplantation going on. Jute and *aus* doing well. Fodder and water sufficient. Weather rainy. Cattle disease reported from thana Binpur. Common rice sells as follows:—

	Srs.	ch.	
Sadar	12	8	per rupee.
Contai	12	8	
Tamluk	11	12	
Ghatal	12	0	

Hooghly.—Rainfall at Sadar 2·07, Serampore 0 92, Arambagh 0·52. Weeding of *aus*, sugarcane and jute progressing. Seedlings are suffering for want of rain. Common rice sells as follows:—

	Srs.	ch.	
Sadar	10	0	per rupee.
Serampore	10	9	
Arambagh	12	1½	

Howrah.—Rainfall at Sadar 1·43, Ulubaria 0·66. Fall general from 15th to 18th. No fall was recorded at Ulubaria on the remaining days of the week, but rain fell on all the days at Sadar. A little more rain wanted for the high lands. Agricultural prospects are generally promising. Lands are being prepared for transplantation, and weeding going on, on lands sown with paddy. No cattle-disease. Fodder and water sufficient. Common rice sells at 10½ seers at Sadar and at 11 seers at Ulubaria.

24-Parganas.—Rainfall at Sadar 1·09, Barasat 1·05, Basirhat 3·05, Diamond Harbour 3·47. Weather rainy and cool. State and prospect of standing crops good, but more rain is wanted in Barasat and Basirhat. Transplantation of *aman* still going on. Common rice sells at 12 seers per rupee; in Diamond Harbour at 10½ seers. Condition of cattle good. Supply of fodder and water sufficient.

Nadia.—Rainfall at Sadar 1·52, Ranaghat 2·20, Chuadanga 2·27, Meherpur 2·22, Kushtia 1·40. Prospects of standing crops good. Fodder and drinking water sufficient. Common rice sells as follows:—

	Srs.	ch.	
Sadar	12	0	per rupee.
Ranaghat	11	0	
Chuadanga	11	0	
Meherpur	10	8	
Kushtia	11	4	

Murshidabad.—Rainfall at Sadar 3·96, Kandi 1·07, Jangipur 4·20, Lalbagh 6·74. Weather seasonable. Prospect of sugarcane and jute good. Transplantation of *aman* seedlings going on. State of *bhadoi* good. No cattle-disease. Fodder and water sufficient. Common rice sells as follows:—

	Srs.	ch.	
Sadar	10	12	per rupee.
Kandi	12	4	
Jangipur	11	8	
Lalbagh	11	4	

Jessore.—Rainfall at Sadar 2·06, Jhenida 2·38, Magura 2·03, Narail 0·84, Bangaon 1·82. Weather seasonable. Prospects of crops fair to good. Fodder and water sufficient. No cattle-disease. Common rice sells at 12 seers per rupee; at Narail at 10½.

Khulna.—Rainfall at Sadar 4·24, Bagerhat 8·01, Satkhira 5·26. Weather seasonable. *Aman* transplantation commenced. *Aus* doing well. Jute prospects fair. Fodder and water sufficient. Cattle-disease reported from out-posts Fakirhat and Kachua and thana Asasuni. Common rice sells as follows:—

	Srs. ch.	
Sadar	11 10	per rupee.
Bagerhat	12 0	
Satkhira	9 8	

Rajshahi.—Rainfall at Sadar 6·47, Nator 1·70, Naugaon 4·39. Transplantation of winter rice continues. Condition of standing crop good. Cattle-disease reported from Lalpur thana. Common rice selling at 12 seers per rupee.

Dinajpur.—Rainfall at Sadar 3·29. Fall in the district general, varying from 1·51 to 6·29. Weather seasonable. Standing crops good. Transplantation of winter rice progressing. No cattle-disease. Fodder and drinking-water plentiful. Rice selling at 12 seers per rupee.

Jalpaiguri.—Rainfall at Sadar 2·52, Alipore Duars 4·28. Fall not general. Weather hot and cloudy with occasional showers. Harvesting of *bhadoi* commenced. Transplantation of *haimanti* going on. Prospect favourable. Common rice sells at 10½ seers per rupee. Fodder and water sufficient.

Darjeeling.—Rainfall at Sadar 11·61, Kurseong 11·79, Siliguri 4·21, Kalimpong 7·44. Weather seasonable. *Hills*—*Haimanti dhan* being cultivated. Maize, potato, *chota marua* and *bhadoi dhan* doing well. *Terai*—Transplanting *haimanti* paddy going on. Prospects fair. Coarse rice sells as follows:—

	Srs. ch.	
Hills	8 0	per rupee.
Terai	11 0	

Maize sells at Darjeeling at 16 seers and at Kalimpong at 20 seers per rupee.

Rangpur.—Rainfall at Sadar 3·64. Fall general. Weather cloudy and rainy. Cutting of *aus* and jute and transplantation of *aman* going on. Cattle-disease still prevails in Gaibanda. Common rice sells at 11 seers per rupee.

Bogra.—Rainfall at Sadar 1·90. Fall general. Weather hot and cloudy. Cutting of *aus* and jute and transplantation of *aman* going on in places. Prospects good. Fodder and water sufficient. Common rice sells at 12 seers per rupee.

Pabna.—Rainfall at Sadar 4·91, Sirajganj 3·00. Fall general. Weather rainy and hot. *Aus* paddy and jute are being harvested. *Aus* partly damaged by excessive rainfall. Prospects of standing crops fair. Fodder and water sufficient. No cattle-disease. Common rice sells at 10 seers per rupee.

Dacca.—Rainfall at Sadar 3·8, Manikganj 4·38, Munshiganj 5·93, Narayanganj 4·82. Prospects of crops fair. Weather seasonable. Fodder available. No cattle-disease. Common rice sells at 11 seers per rupee.

Mymensingh.—Rainfall at Sadar 1·60, Jamalpur 3·06, Kishorganj 2·48, Nitrokona 6·08, Tangail 6·42. Weather hot and cloudy. Winter rice is being transplanted. *Aus* has suffered from heavy rain; outturn estimated at 70 per cent. Jute steeping commenced. Fodder and water sufficient. No cattle-disease. Common rice sells as follows:—

	Srs. ch.	
Sadar	10 0	per rupee.
Kishorganj	11 0	
Jamalpur	12 0	
Netrokona	12 3	
Tangail	10 2	

Faridpur.—Rainfall at Sadar 5·00, Goalundo 2·91, Madaripur 3·81. Weather—Storm and heavy rain. Harvesting of *aus* paddy and steeping of jute begun. Prospects of *aman* paddy improving. Fodder sufficient. No cattle-disease. Common rice sells at 11 seers per rupee.

Backergunge.—Rainfall at Sadar 9·33. Fall general, but heaviest at Patuakhali, 17·22. Weather seasonable. Transplantation of *aman* going on. Cattle-disease in thana Matbari. Fodder and water sufficient. Common rice sells at 10¼ seers per rupee.

Tippera.—Rainfall at Sadar 4·45, Brahmanbaria 1·95, Chandpur 6·01. Weather seasonable. Prospects not good in Sadar. Harvesting of *aus* paddy and jute commenced and transplantation of *aman* continues. Fodder and water sufficient. No cattle-disease. Common rice sells at 11 seers per rupee.

Noakhali.—Rainfall at Sadar 7·29, Feni 11·31. Fall general. Weather rainy. Transplantation of *aman* continues. Prospects of *aus* fair. Cattle-disease reported from two thanas. Fodder and water sufficient. Condition of betelnut fair. Common rice sells at Sadar at 10 seers per rupee.

Chittagong.—Rainfall at Sadar 19·72, Cox's Bazar 13·60. *Aman dhan* is being sown. Water and fodder sufficient. Common rice sells at 12¾ seers per rupee.

Chittagong Hill Tracts.—Rainfall at Sadar 4·42. Fall general. Weather uncertain. *Jooms* paddy progressing favourably. Winter rice sowing proceeding. Cattle-disease reported in the jurisdiction of Mahalcherri police-station. Common rice selling at 12 seers per rupee.

Patna.—Rainfall at Sadar 1·66, Barh 1·72, Dinapore 2·97, Hilsa 2·60, Bikram 1·98. Weather cloudy. Sowing of Indian-corn and paddy continues. Sugarcane doing well. No cattle-disease. Fodder and water sufficient. Common rice sells as follows :—

	Srs.	ch.	
Patna	11	0	per rupee.
Barh	11	4	
Dinapore	11	8	

Gaya.—Rainfall at Sadar 2·95, Jahanabad 2·58, Aurangabad 0·37, Nawadah 1·00. Weather hot and rainy. Sowing of maize over. Transplantation of *marua* continues. Sugarcane doing well. More rain wanted, specially in thana Sherghati. Fodder and water for cattle sufficient. Average price of common rice is 11 seers per rupee.

Shahabad.—Rainfall at Sadar 1·18, Buxar 2·12, Bhabhua 1·22, Sasaram 1·53, Dehri 0·31. Weather hot with occasional showers. Agricultural operations in progress. Fodder and water sufficient. No cattle-disease. Rice sells at Sadar at 11 seers per rupee.

Saran.—Rainfall at Sadar 1·85, Siwan 4·16. Gopalganj 3·46. Weather cloudy and rainy. Standing crops looking well. Rain wanted for transplantation of winter paddy. Fodder and water sufficient. No cattle-disease. Rice sells at 11½ seers per rupee.

Champaran.—Rainfall at Sadar 2·89, Bettiah 3·13. Weather hot and cloudy. Standing crops doing well. Weeding of *bhadoi* and transplantation and sowing of paddy going on. No cattle-disease. Fodder and water sufficient. Common rice sells at 12¼ seers and maize at 23½ seers per rupee.

Muzaffarpur.—Rainfall at Sadar 2·42, Hajipur 2·13, Sitamarhi ·70. Weather hot and cloudy generally. Sowing of *bhadoi* crops almost over. Transplantation of paddy going on. Prospects promising. More rain wanted. Fodder and water sufficient. Very few cases of cattle-disease in Sitamarhi subdivision. Prices are—Common rice 11½ seers, maize 19 seers a rupee.

Darbhanga.—Rainfall at Sadar 1·60, Samastipur 1·19, Madhubani 0·44. Weather cloudy with east wind. Transplantation of paddy is going on. Fodder and water sufficient. Cattle-disease is reported from Sadar and Phulparas thanas. Common rice sells as follows :—

	Srs.	ch.	
Sadar	12	0	per rupee.
Samastipur	12	0	
Madhubani	11	11	

Monghyr.—Rainfall at Sadar 2·32, Begusarai 1·86, Jamui 1·07. Weather seasonable. *Bhadoi* and paddy sowings continue. Weeding vigorously going on. Transplantation of *mahua* and paddy in progress. Standing crops promising. Indigo and sugarcane doing well. Fodder and water sufficient. A few cases of cattle-disease reported from Begusarai thana. Common rice sells at Sadar at 10½ seers and at subdivisions at 11 seers per rupee.

Bhagalpur.—Rainfall at Sadar 1·58, Banka 0·99, Madhipura 0·52, Supaul 0·86. Weather cloudy with occasional rains. Transplantation of winter rice going on except in Supaul, where it has stopped for want of rain. Standing crops doing fairly well, though in some places seedlings have withered. More rain wanted. *Marua* has suffered much. Sugarcane in Banka doing well. Fodder and water sufficient. Cattle-disease reported from Supaul, Banka and Sadar subdivisions. Common rice sells as follows :—

	Srs.	ch.	
Sadar	11	6	per rupee.
Banka	11	14	
Madhipura	13	0	
Supaul	13	4	

Purnea.—Rainfall at Sadar 3·05, Kishanganj 4·16, Araria 2·05. Fall general. More rain is needed for transplantation of *aghani* seedlings. Prospects on the whole good. Weather hot and cloudy with easterly wind. A few cases of cattle-disease reported from outpost Palasi. Fodder and water sufficient. Common rice sells as follows :—

	Srs.	ch.	
Sadar	9	0	per rupee.
Kishanganj	11	0	
Araria	12	0	

Malda.—Rainfall at Sadar 2·33, Chanchal 3·11, Sibganj 2·62, Gojal 3·21. Fall general. Weather rainy and hot. Harvesting of *bhadoi* going on in places. This crop is reported to have been damaged to a small extent at thana Nawabganj. Transplantation of winter paddy in progress. More rain is wanted. No cattle-disease. Fodder and water available. Common rice sells at 11½ seers per rupee.

Sonthal Parganas.—Rainfall at Sadar 3·83, Deoghur 6·29, Godda 4·98, Jamtara 6·81, Pakaur 2·92, Rajmahal 1·19. Weather hot and cloudy with occasional rain. Sugarcane and Indian-corn doing well, transplantation has begun in places, but more rain needed generally. Fodder and water sufficient. Common rice sells at Sadar at 11¾ seers per rupee. Cattle-disease reported from Pakaur.

Cuttack.—Rainfall at Sadar 9·76. Smaller quantity in other parts except Banki, where it amounted to 16·01. Weather of usual monsoon character. *Beali* being harrowed and *sarad* reploughed. Prospects generally good. Fodder and water sufficient. Common rice sells at 13 seers 2 chitaks at Sadar.

Balasore.—Rainfall at Sadar 2·72. Fall general and beneficial to crops. Harrowing progressing. Prospects good. Sugarcane, jute and oilseeds doing well. Rice sells at 13 and 15 seers per rupee at Sadar and Bhadrak respectively. Fodder and water sufficient.

Angul.—Rainfall at Sadar 6·65, Chhindipada 7·43. Fall general Weather rainy. Puddling and transplantation of *sarad* paddy in progress. Cattle-disease not reported. Fodder and water sufficient. Common rice sells at 12 and 15 seers per rupee at Sader and interior respectively.

Puri.—Rainfall at Sadar 9·53. Weather cloudy. Rainfall throughout the whole district. Winter rice and *bhadoi* paddy in good progress. Sugarcane and cotton growing well. Fodder and water-supply sufficient. Cattle-disease reported. Coarse rice sells at 13 seers 2 chitaks per rupee.

Hazaribagh.—Rainfall at Sadar 2·80, Giridih 3·98. Weather seasonable. Ploughing and sowing continue. Fodder and water sufficient. Common rice sells at 11½ seers per rupee both at Sadar and Giridih. More rain wanted.

Ranchi.—Rainfall at Sadar 4·67. Fall general. Weather of settled monsoon character. Prospects of standing crops good. Transplantation of paddy commenced in places. Cattle-disease reported from several thanas. Fodder and water sufficient. Common rice selling at 13¼ seers per rupee.

Palamau.—Rainfall general. Weather cloudy. *Bhadoi* sowings still in progress. Prospects good. Sugarcane doing well. Cattle-disease decreasing. Fodder and water sufficient. Prices are at Sadar—Rice 10 seers, 2 chitaks, maize 23 seers 9 chitaks.

Manbhum.—Rainfall at Sadar 3·57, Gobindpur 2·40. Fall general except in thana Chas. Weather seasonable. Prospects of crops good. Transplantation of winter rice in progress. Fodder and water sufficient. Cattle-disease not reported. Average price of common rice is at Sadar 12 seers and at Gobindpur 11 seers per rupee.

Singhbhum.—Rainfall at Sadar 8·87. Weather seasonable. Transplantation of paddy in full swing. Average price of rice is 13¾ seers per rupee in the district; at Chaibassa 12 seers per rupee.

General Summary.—The rainfall during the week was general and at places heavy, but more rain is wanted in the districts of Saran, Muzaffarpur, Bhagalpur, Purnea and Hazaribagh and in parts of Gaya and Midnapore. Transplantation of winter rice in progress. Harvesting of early rice and jute continues in some parts of North and East Bengal. Sugarcane doing well. Prospects fair. Cattle-disease reported from 16 districts. No want of fodder or water. The price of common rice has risen in 11 districts, fallen in 10, and is stationary in the rest.

By order of the Lieutenant-Governor of Bengal,

W. C. MACPHERSON,

Offg. Secretary to the Govt. of Bengal.

REVENUE DEPARTMENT,
The 22nd July 1902.

PRICES-CURRENT (*RETAIL*) OF FOOD-GRAINS AND SALT

IN THE

HEAD-QUARTERS STATION BAZARS OF THE DISTRICTS OF BENGAL

DURING THE FORTNIGHT ENDING THE 15TH JULY 1902.

PRICES-CURRENT (retail) of Food-grains and Salt in the Head-

Number.	DISTRICTS.	QUANTITIES PER RUPEE IN											
		WHEAT.			BARLEY.			RICE, COMMON.			JOWAR OR CHOLUM (*Sorghum Vulgare*).		
		Present return.	Next preceding return.	Corresponding return of last year.	Present return.	Next preceding return.	Corresponding return of last year.	Present return.	Next preceding return.	Corresponding return of last year.	Present return.	Next preceding return.	Corresponding return of last year.
	BENGAL.	S. Ch.	S. Ch.	S. Ch.	S. Ch.	S. Ch.	S. Ch.	S. Ch.	S. Ch.	S. Ch.	S. Ch.	S. Ch.	S. Ch.
BURDWAN DIVISION.													
1	Burdwan ...	13 0	13 0	11 8	...	...	...	11 10	11 12	11 4	...	...	...
2	Birbhum ...	12 0	12 12	12 0	...	...	...	11 4	12 0	12 0	...	.	...
3	Bankura ...	11 0	12 0	10 8	...	...	...	13 0	13 12	11 0			...
4	Midnapore ...	10 0	12 0	10 0	...	...	...	12 8	12 8	11 0	...	.	...
5	Hooghly ...	10 0	10 0	10 0	...	...	...	9 0	10 0	9 8	...		...
6	Howrah ...	...	...	...	..	...	..	10 8	10 8	10 4	...	.	...
PRESIDENCY DIVISION.													
7	24-Parganas ...	...	...	...	...	...	...	10 0	10 0	9 8	...	..	...
8	Calcutta ...	10 0	10 0	10 0	14 8	14 4	16 0	10 0	10 0	9 10	12 4	13 5	16 0
9	Nadia ...	14 9	14 9	13 5	20 0	20 0	16 0	11 6	11 6	11 7	...	...	...
10	Murshidabad ...	16 0	15 0	13 0	21 0	20 0	20 0	11 8	11 8	11 12	...		...
11	Jessore ...	10 0	10 0	10 0	10 0	10 0	10 0	12 0	12 12	11 8	...	.	...
12	Khulna ...	...	...	...	...	...	...	11 10	11 10	10 8	...	...	...
RAJSHAHI DIVISION.													
13	Rajshahi ...	16 8	16 8	13 8	21 0	21 0	21 0	10 14	10 11	11 14	...	...	
14	Dinajpur ...	12-9-2f.	13 0	13 0	...	...	...	11-6-2f.	11 8	10 12	...	...	...
15	Jalpaiguri ...	11 0	11 0	10 0	...	...	...	10 12	10 12	10 8	...	.	...
16	Darjeeling ...	...	...	...	...	...	...	9 8	10 0	9 0	...	...	.
17	Rangpur ...	10 8	10 8	9 0	...	...	...	11 0	11 0	8 0	...	...	...
18	Bogra ...	10 8	10 8	10 8	...	...	...	11 4	11 4	10 8	...	...	..
19	Pabna ...	15 12	15 12	13 8	26 4	26 4	22 8	11 4	10 8	10 11	...	...	...
DACCA DIVISION.													
20	Dacca ...	12 8	12 8	11 8	18 0	18 0	16 0	11 0	11 0	9 4	...	...	...
21	Mymensingh ...	12 0	12 0	9 8	13 0	13 0	11 0	11 0	11 0	8 8	...	...	...
22	Faridpur ...	16 13	16 0	11 8	22 0	22 0	12 8	12 8	9 8	10 0	...	...	...
23	Backergunge ...	...	...	...	...	...	...	10 8	10 8	9 4	...	...	...

A. In the subdivisions the retail prices of salt per rupee are—Kalna 11 seers 13 chitaks ; Katwa 11 seers 12 chitaks ; Raniganj 10½ seers.
B. Rampur Hât return not received.
C. At Vishnupur the retail price of salt is 9½ seers per rupee.
D. In the subdivisions the retail prices of salt per rupee are—Contai 10 seers ; Tamluk 11 seers ; Ghatal 11 seers 8 chitaks.
E. In the subdivisions the retail prices of salt per rupee are—Serampore 10½ seers ; Arambagh return not received.
F. At Ulubaria the retail price of salt is 10 seers 10½ chitaks per rupee.
G. In the marts in the interior of the district the retail prices of salt per rupee are—Chetla 10 seers 10 chitaks ; Barasat 11 seers ; Baduria 11 seers ; Moraghat 9 seers 13½ chitaks.
H. In the subdivisions the retail prices of salt per rupee are—Kushtia 10½ seers ; Chuadanga 10 seers (panga) ; Meherpur 10 seers 10 chitaks (karkatoh) ; Ranaghat 11 seers 4 chitaks (ornahud).
I. In the subdivisions the retail prices of salt per rupee are—Lalbagh 10½ seers ; Kandi 11 seers ; Jangipur 11 seers.

quarters Station Bazars of the Districts of Bengal on the 15th July 1902.

SALT.			WHOLESALE PRICES PER MAUND OF 40 SEERS.			AVERAGE WAGES PER MONTH.									DISTRICTS.	Number.	
			SALT.			UNSKILLED LABOUR—ABLE-BODIED AGRICULTURAL LABOURER.			SYCE OR HORSE-KEEPER.			SKILLED LABOUR—COMMON MASON, CARPENTER OR BLACKSMITH.					
Present return.	Next preceding return.	Corresponding return of last year.	Present return.	Next preceding return.	Corresponding return of last year.	Present return.	Next preceding return.	Corresponding return of last year.	Present return.	Next preceding return.	Corresponding return of last year.	Present return.	Next preceding return.	Corresponding return of last year.			
S. Ch.	S. Ch.	S. Ch.	Rs. A. P.	Rs. A. P.	Rs. A. P.	Rs. A.	Rs. A.	Rs. A.	Rs. A.	Rs. A.	Rs. A.	Rs. A.	Rs. A.	Rs. A.	BENGAL.		
A 11 4	11 8	10 8	3 4 0	3 3 0	3 10 0	9 8	7 8	7 8 to 10 0	6 0	7 0	6 0 to 8 0	15 0	15 0	15 0	Burdwan.	1	Burdwan Division.
B 10 8	10 8	10 8	3 12 0	3 12 0	3 10 6	6 0 to 7 8	6 0 to 7 8	6 0 to 7 8	4 0 to 6 0	4 0 to 6 0	4 0 to 6 0	12 0 to 15 0	7 8 to 15 0	7 8 to 12 0	Birbhum.	2	
C 11 4	11 0	10 0	3 8 0	3 12 0	4 0 0	6 0 to 7 8	6 0 to 7 8	6 0 to 7 8	5 0 to 7 8	5 0 to 7 8	5 0 to 7 8	8 0 to 12 0	8 0 to 12 0	8 0 to 12 0	Bankura.	3	
D 10 8	10 8	Panga. 10 0	3 8 0	3 7 0	3 13 0	8 8	8 8	8 8	7 8	7 8	7 8	12 0 to 18 0	12 0 to 18 0	12 0 to 18 0	Midnapore	4	
E 10 8	1 8	10 0	3 12 0	3 12 0	3 12 0	10 0	10 0	10 0	8 0	7 0	8 0	12 0 to 15 0	10 0 to 20 0	15 0 to 30 0	Hooghly.	5	
F 10 8	10 8	Panga. 10 4	3 12 0	3 12 0	3 11 0	10 8	10 8	10 0 to 12 0	8 0	8 0	10 0 to 12 0	15 0	15 0	20 0 to 30 0	Howrah.	6	
G 10 10	10 10	Panga. 10 11	3 4 9	3 7 0	3 10 0	8 0 to 10 0	10 0	8 0 to 10 0	7 0 to 8 0	8 0	7 0 to 8 0	12 0 to 20 0	15 0 to 25 0	12 0 to 20 0	24-Parganas.	7	Presidency Division.
11 0	11 0	Panga. 11 0	3 6 0	3 6 0	3 8 0	9 0	8 8	9 0	9 0	8 0	8 0	18 0 to 20 0	18 0 to 20 0	18 0 to 22 0	Calcutta.	8	
H 12 4	12 4	11 0	3 4 0	3 4 0	3 10 0	9 6	7 8	7 8	7 0	6 0	7 0	12 0 to 15 0	10 0 to 15 0	10 0 to 20 0	Nadia.	9	
I 11 0	11 0	11 0	3 6 6	3 7 0	3 7 0	6 0	5 8	5 0	5 0 to 6 0	5 0 to 6 0	5 0 to 6 0	14 0 to 16 0	14 0 to 16 0	14 0 to 15 0	Murshidabad.	10	
J 10 0	10 0	Panga. 10 0	3 14 0	3 14 0	3 14 0	9 6	10 0	9 6	7 0	7 8	7 0	10 0 to 15 0	15 0 to 19 0	15 0 to 18 0	Jessore.	11	
K 10 0	10 0	10 0	3 12 0	3 12 0	3 12 0	9 6 to 11 0	9 6 to 11 0	9 6 to 11 0	7 0 to 9 0	7 0 to 10 0	7 0 to 10 0	10 0 to 28 0	10 0 to 28 0	10 0 to 28 0	Khulna.	12	
L 10 5	10 5	Panga. 9 12	3 13 4	3 13 4	4 0 0	7 8	7 8	7 8	6 8	6 0	6 0	7 0 to 15 0	7 0 to 15 0	7 0 to 15 0	Rajshahi.	13	Rajshahi Division.
M 10 8	10 8	Panga. 10 0	3 12 0	3 12 0	4 0 0	7 0	7 0	7 0	6 0	6 0	6 0	12 0 to 22 0	12 0 to 22 0	12 0 to 22 0	Dinajpur.	14	
N 10 0	10 0	Panga. 9 8	3 11 0	3 10 6	3 15 0	7 8	7 8	7 8	8 0	8 0	8 8	15 0 to 20 0	15 0 to 20 0	15 0 to 20 0	Jalpaiguri.	15	
O 8 8	8 8	8 0	4 9 0	4 9 0	4 12 0	7 0 to 10 0	7 0 to 10 0	7 0 to 10 0	8 0 to 10 0	8 0 to 10 0	8 0 to 11 0	12 0 to 20 0	12 0 to 25 0	12 0 to 25 0	Darjeeling.	16	
O 8 5	8 0	8 0	4 10 0	4 10 0	4 12 0												
P 10 8	10 8	Panga 9 0	3 12 0	3 12 0	4 0 0	9 0	7 8	9 0	7 0	7 8	7 0	15 0	15 0	15 0	Rangpur.	17	
10 2	10 2	Panga. 9 12	3 12 0	3 12 0	4 0 0	7 8	7 8	7 8	5 0 to 8 0	5 0 to 8 0	5 0 to 8 0	10 0 to 20 0	10 0 to 20 0	10 0 to 20 0	Bogra.	18	
Q 10 8	10 8	Panga. 9 12	3 12 0	3 12 0	3 14 6	...	5 0 to 7 8	5 0 to 8 0	...	6 0 to 8 0	6 0 to 8 0		7 0 to 20 0	7 8 to 20 0	Pabna.	19	
R 10 8	10 8	Panga. 10 0	3 12 0	3 9 0	3 12 0	5 0 to 7 0	6 0 to 7 8	5 0 to 7 0	6 0 to 9 0	6 0 to 9 0	6 0 to 9 0	9 0 to 18 0	9 0 to 18 0	9 0 to 18 0	Dacca.	20	Dacca Division.
S 10 0	10 0	Panga. 9 8	3 12 0	4 0 0	4 3 0	7 0	7 0	8 0	8 0	8 0	8 0	11 0 to 15 0	12 0 to 24 0	12 0 to 14 0	Mymensingh.	21	
T 10 10	10 10	10 0	3 12 0	3 12 0	4 0 0	10 0	11 4 to 13 2	7 8 to 13 2	8 0	8 0 to 10 0	8 0 to 10 0	15 0	15 0 to 20 0	15 0 to 20 0	Faridpur.	22	
U 10 0	10 0	Panga. 10 0	3 10 0	3 10 0	3 10 0	10 0 to 12 0	8 0	8 0 to 15 0	8 0 to 12 0	8 0	7 8 to 8 0	15 0 to 0 0	12 0 to 15 0	12 0 to 20 0	Backerganga.	23	

J. In the subdivisions the retail prices of salt per rupee are—Jhenida 10 seers; Magura 9½ seers; Narail 10 seers; Bangaon 10 seers 10 chitaks.
K. In the subdivisions the retail prices of salt per rupee are—Bagerhat 10 seers; Satkhira 11 seers.
L. In the subdivisions the retail prices of salt per rupee are—Nator 10 seers 8 chitaks; Naugaon 9½ seers.
M. No report from subdivision.
N. At Alipur Duars the retail price of salt is 8 seers per rupee.
O. The retail price of salt (panga) at Kurseong is 8 seers per rupee; Siliguri 9 seers.
P. In the subdivisions the retail prices of salt per rupee are—Gaibanda 10 seers; Kurigram return not received; Nilphamari 10 seers
Q. At Sirajganj the retail price of salt is 11 seers per rupee.
R. In the marts in the interior of the district the retail prices of salt per rupee are—Madanganj 11 seers 6 chitaks; Manikganj 9 seers; Mirkadim 11 seers 6 chitaks
S. In the subdivisions the retail prices of salt per rupee are—Kishorganj 10 seers; Jamalpur 10 seers; Tangail 9 seers; Netrokona 10 seers.
T. In the subdivisions the retail prices of salt per rupee are—Goalundo 10 seers; Madaripur 10½ seers (crushed).
U. In the subdivisions the retail prices of salt per rupee are—Pirojpur return not received; Patuakhali return not received; Bhola 10 seers.

PRICES-CURRENT (retail) of Food-grains and Salt in the Head-quarters

QUANTITIES PER RUPEE IN

Number.	DISTRICTS.	WHEAT.			BARLEY.			RICE, COMMON.			JOWAR OR CHOLUM (*Sorghum Vulgare*).		
		Present return.	Next preceding return.	Corresponding return of last year.	Present return.	Next preceding return.	Corresponding return of last year.	Present return.	Next preceding return.	Corresponding return of last year.	Present return.	Next preceding return.	Corresponding return of last year.
BENGAL—*concluded.*		S. Ch.	S. Ch.	S. Ch.	S. Ch.	S. Ch.	S. Ch.	S. Ch.	S. Ch.	S. Ch.	S. Ch.	S. Ch.	S. Ch.
CHITTAGONG DIVISION. 24	Tippera ..	...	...	...	...	...	...	11 0	11 0	8 11	...	...	...
25	Noakhali ...	...	...		...	...	...	10 0	10 0	9 8	...	...	...
26	Chittagong ...	...	...	...	...	...	...	12 10	12 12	12 12	...	...	...
BIHAR.													
PATNA DIVISION. 27	Patna	14 0	14 0	13 8	19 8	19 0	17 0	10 8	11 0	12 8	*White* 14 0 *Raksa* 21 0	*White* 16 0 *Raksa* 20 0	17 0
28	Gaya ...	13 4	13 8	12 8	17 0	16 0	16 0	10 12	11 0	10 12	18 0	18 8	15 8
29	Shahabad	13 0	13 0	12 0	16 0	16 0	15 0	11 0	11 0	10 0	...	...	...
30	Saran ...	15 0	14 0	12 0	18 0	20 0	18 0	12 0	11 8	10 0	...	...	...
31	Champaran	13 0 to 13 8	13 8	13 0	22 0 to 23 0	22 0 to 24 0	21 0	12 0	12 8	12 0	...	...	...
32	Muzaffarpur ...	14 0	14 0	11 0	19 0	18 0	18 0	11 8	11 8	11 0	...	...	...
33	Darbhanga ..	13 14	13 8	13 3	19 12	18 11	19 12	12 0	11 4	13 3	...	...	...
BHAGALPUR DIVISION. 34	Monghyr ...	14 8	15 3	13 14	20 0	17 13	18 14	10 0	10 8	11 8	...	...	...
35	Bhagalpur ...	14 0	13 14	13 14	19 0	19 0	19 0	12 0	12 0	12 0	...	...	...
36	Purnea ...	12 0	12 0	16 0	...	...	...	10 0	11 0	12 0	...	...	...
37	Malda ...	16 8	16 0	12 8	...	...	...	11 0	11 8	10 0	...	...	...
38	Sonthal Parganas.	10 8	10 8	10 8	15 0	15 0	14 0	13 0	13 0	12 5	...	...	...
ORISSA.													
ORISSA DIVISION. 39	Cuttack ...	12 7	13 2	10 8	...	...	...	13 2	12 7	12 7	...	...	...
40	Balasore ...	16 0	14 0	12 0	11 0	...	11 0	13 0	12 8 to 13 0	11 0	...	...	...
41	Angul ...	...	...	...	...	...	...	12 0	12 0	...	...	...	...
42	Puri .	11 0	11 0	10 8	...	...	...	13 2	13 12	13 2	...	...	...
CHOTA NAGPUR.													
CHOTA NAGPUR DIVISION. 43	Hazaribagh ...	11 0	11 0	10 0	16 0	15 0	15 0	11 4	11 8	10 10	...	...	...
44	Ranchi ...	7 4 to 10 0	7 4 to 10 0	8 0 to 11 0	14 0	14 0	14 0	12 12	13 8	13 0	...	...	...
45	Palamau ...	11 4	10 2	9 9	13 8	14 1	12 6	10 2	10 2	9 0	...	...	...
46	Manbhum ...	12 0	11 8	11 0	16 0	16 0	20 0	12 8	12 0	12 9	22 0	22 0	16 0
47	Singhbhum ...	11 0	11 0	10 0	...	...	...	13 0	13 8	14 0	...	...	...

V. In the subdivisions the retail prices of salt per rupee are—Chandpur 9 seers ; Brahmanbaria 10 seers.
W. At Feni the retail price of salt is 9 seers per rupee.
X. Return from Cox's Bazar not received.
Y. In the subdivisions the retail prices of salt per rupee are—Barh 10⅔ seers ; Dinapore 10½ seers ; Bihar 10 seers.
Z. In the subdivisions the retail prices of salt per rupee are—Jahanabad return not received ; Nawada 10 seers ; Aurangabad 11 seers.
a. In the subdivisions the retail prices of salt per rupee are—Buxar 11 seers ; Bhabua return not received ; Sasaram 10½ seers.
b. In the subdivisions the retail prices of salt per rupee are—Siwan 11 seers 6 chitaks ; Gopalganj (Mirganj) 12 seers 2 chitaks.
c. At Bettiah the retail price of salt is 10½ seers per rupee.
d. In the subdivisions the retail prices of salt per rupee are—Hajipur 10½ seers ; Sitamarhi 11 seers.
e. In the subdivisions the retail prices of salt per rupee are—Samastipur return not received ; Madhubani 10 seers 6 chitaks.
f. In the subdivisions the retail prices of salt per rupee are—Begusarai 10 seers ; Jamui 10 seers 8 chitaks.

CALCUTTA,
The 21st July 1902.

Station Bazars of the Districts of Bengal on the 15th July 1902—concld.

WHOLESALE PRICES PER MAUND OF 40 SEERS.						AVERAGE WAGES PER MONTH.										
SALT.			SALT.			UNSKILLED LABOUR—ABLE-BODIED AGRICULTURAL LABOURER.			SYCE OR HOUSE-KEEPER.			SKILLED LABOUR—COMMON MASON, CARPENTER OR BLACKSMITH.			DISTRICTS.	Number.
Present return.	Next preceding return.	Corresponding return of last year.	Present return.	Next preceding return.	Corresponding return of last year.	Present return.	Next preceding return.	Corresponding return of last year.	Present return.	Next preceding return.	Corresponding return of last year.	Present return.	Next preceding return.	Corresponding return of last year.		
S. Ch.	S. Ch.	S. Ch	Rs. A. P.	Rs. A. P.	Rs. A. P.	Rs. A.	Rs. A.	Rs. A.	Rs. A.	Rs. A.	Rs. A.	Rs. A.	Rs. A.	Rs. A.	BENGAL—*concluded.*	
V 10 0	10 0	9 0	3 14 0	3 14 0	4 8 0	...	8 0	8 0	...	7 0 to 8 0	7 0 to 9 0	...	15 0	12 0 to 25 0	Tippera.	24
W 9 0	9 4	9 0	Panga. 1 2 0	4 0 0	4 8 0	9 6	10 12	7 8	7 0 to 8 0	7 0 to 8 0	7 0 to 8 0	10 0 to 15 0	15 0 to 20 0	10 0 to 15 0	Noakhali.	25
X 10 0	10 0	9 8	Panga. 3 8 0	3 6 0	4 0 0	8 0 to 10 0	7 0 to 10 0	8 0 to 10 0	7 0 to 9 0	7 0 to 9 0	7 0 to 9 0	10 0 to 15 0	10 0 to 15 0	10 0 to 15 0	Chittagong.	26
															BIHAR.	
Y 10 12	10 8	10 8	Panga. 3 10 0	3 10 6	3 12 0	..	4 0 to 5 0	4 0 to 5 0	..	4 8 to 5 0	4 8 to 5 0	..	6 0 to 7 0	6 0 to 7 0	Patna.	27
Z 11 0	11 0	10 0	3 9 6	3 9 6	4 0 0	4 0 to 5 0	3 8 to 5 0	3 8 to 5 0	4 0 to 5 0	3 0 to 5 0	3 0 to 5 0	6 0 to 12 0	6 0 to 12 0	6 0 to 12 0	Gaya	28
a 10 0	10 0	10 0	4 0 0	4 0 0	4 0 0	4 11	4 11	4 11	4 0 to 6 0	5 8 to 6 0	5 8 to 6 0	7 8 to 9 6	5 8 to 9 6	7 8 to 9 6	Shahabad.	29
b 11 0	11 0	10 0	3 10 0	3 10 0	4 0 0	3 12 to 5 10	3 12 to 5 10	3 12 to 5 10	4 0 to 10 0	5 0 to 8 0	4 0 to 10 0	7 8 to 10 0	7 8 to 11 4	7 8 to 10 0	Saran.	30
c 10 8	10 8	10 0	3 13 0	3 13 0	4 0 0	...	4 0	4 0	...	4 0	4 0	...	6 0	6 0	Champaran.	31
d 10 0	10 0	9 8	Panga. 4 0 0	4 0 0	4 1 6	3 0 to 4 0	3 0 to 4 0	3 0 to 4 0	3 0 to 4 0	3 0 to 4 0	3 0 to 4 0	7 0 to 8 0	6 0 to 8 0	7 0 to 8 0	Muzaffarpur.	32
e 10 0	11 0	10 4	3 10 0	3 10 0	4 0 0	3 12 to 5 0	3 12 to 5 0	3 12 to 5 0	3 0 to 5 0	3 0 to 5 0	3 0 to 5 0	5 10 to 10 5	5 0 to 12 0	3 12 to 12 0	Darbhanga.	33
f 10 8	10 8	10 8	3 6 6	3 6 6	3 6 6	4 0 to 6 0	4 0 to 5 0	7 8	4 0 to 5 0	4 0 to 6 0	4 0 to 6 0	8 0 to 10 0	8 0 to 10 0	10 0 to 12 0	Monghyr.	34
g 10 12	10 12	10 2	Panga. 3 10 0	3 9 0	3 13 0	6 8	6 8	5 10	5 0	5 0	5 0	6 0 to 10 0	6 0 to 10 0	7 8 to 12 0	Bhagalpur.	35
h 10 0	10 0	9 8	Panga. 3 14 0	3 14 0	...	4 11 to 7 8	4 11 to 7 8	5 11 to 7 8	4 0 to 6 0	4 0 to 6 0	4 0 to 6 0	12 0 to 15 0	12 0 to 15 0	12 0 to 15 0	Purnea.	36
i 10 0	9 8	9 8	Panga. 3 14 0	4 0 0	4 0 0			6 0 to 7 0	6 0	6 0	6 0	10 0 to 15 0	10 0 to 15 0	10 0 to 15 0	Malda.	37
9 8	9 8	9 0	Karkatch. 4 2 0	4 0 0	4 2 0	7 0	7 0									
j 10 8	10 8	10 0	Karkatch. 3 10 0	3 10 0	3 12 0	3 12 to 4 12	3 12 to 4 8	3 12 to 4 8	5 0 to 6 0	4 0 to 6 0	4 0 to 6 0	7 8 to 15 0	7 8 to 15 0	7 8 to 15 0	Sonthal Parganas.	38
															ORISSA.	
k 13 0	13 0	12 0	3 0 0	3 0 0	3 0 0	5 10	5 10	5 10	5 0	5 0	5 0	7 8 to 18 12	7 8 to 18 12	7 8 to 18 12	Cuttack.	39
l 11 0	11 0	10 8	Panga. 3 7 6	3 8 0	3 12 0	5 0 to 6 0	4 11 to 5 0	5 0 to 6 9	4 0 to 8 0	4 0 to 5 0	4 0 to 7 0	9 0 to 11 0	11 4	9 6 to 15 0	Balasore.	40
m 8 0	8 0	...	...	...	...	..	4 13½	...	...	3 0 to 4 0	...	...	11 10 to 15 8	...	Angul.	41
n 11 13	13 0	12 12	3 4 0	3 4 0	3 0 0	...	6 0	4 0	...	6 0	6 0	...	9 0 to 11 0	7 8 to 10 0	Puri.	42
															CHOTA NAGPUR.	
8 0	8 8	9 0	Panga. 4 4 0	4 7 0	4 7 0	5 0 to 6 0	4 0 to 5 0	4 0 to 5 0	5 0 to 7 0	5 0 to 7 0	5 0 to 7 0	7 0 to 12 0	6 0 to 12 0	6 0 to 12 0	Hazaribagh.	43
9 8	9 4	8 12	Panga. 4 2 0	4 5 0	4 10 0	4 0	3 0	4 0	5 0	5 0	5 0	8 0	8 0	8 0	Ranchi.	44
9 9	9 9	7 14	1 ...	...	...	6 1½	6 1½	6 1½	4 0 to 5 0	4 0 to 5 0	4 0 to 5 0	7 8 to 12 0	10 0 to 12 0	7 8 to 9 0	Palamau.	45
o 10 0	10 0	10 0	Panga. 3 12 0	3 9 6	3 14 0	5 10 to 5 10	2 13 to 6 0	5 0 to 6 0	6 0	5 0 to 8 0	6 0	6 0 to 18 12	11 4 to 15 0	11 4 to 15 0	Manbhum.	46
9 0	9 0	9 0	4 4 0	4 4 0	3 8 0	4 0	4 0	4 0	5 0	7 0	5 0	12 0 to 15 0	12 0	12 0	Singhbhum.	47

CHITTAGONG DIVISION. PATNA DIVISION. BHAGALPUR DIVISION. ORISSA DIVISION. CHOTA NAGPUR DIVISION.

g. In the subdivisions the retail prices of salt per rupee are—Banka 10 seers; Madhipura 9½ seers; Supaul 10 seers.
h. In the subdivisions the retail prices of salt per rupee are—Kishanganj 9 seers; Arraria 9 seers.
i. At Balia Nawabganj the retail price of salt is 10 seers per rupee.
j. In the subdivisions the retail prices of salt per rupee are—Deoghur 10 seers (panga); Godda return not received; Jamtara 11 seers, Pakaur 10½ seers (karkatch); Rajmahal 11½ seers.
k. In the subdivisions the retail prices of salt per rupee are—Jajpur 10 seers (panga); Kendrapara 10 seers (panga).
l. At Bhadrak the retail price of salt is 10½ seers per rupee.
m. In the marts in the interior of the district the retail prices of salt per rupee are—Sankhpur 9 seers; Bisipara 9 seers.
n. At Khurda the retail price of salt is 13 seers per rupee.
o. At Gobindpur the retail price of salt is 10 seers 10 chitaks per rupee.

Published for general information.

W. C. MACPHERSON,
Offg. Secretary to the Govt. of Bengal.

PRICES-CURRENT (wholesale) of Food-grains, Firewood, &c.,

Number.	Marts.	Rice (best sort).			Common rice (*mota chaul*).			Wheat (*Triticum sativum*).			Barley (*Hordeum vulgare*).		
		Present return.	Next preceding return.	Corresponding return of last year.	Present return.	Next preceding return.	Corresponding return of last year.	Present return.	Next preceding return.	Corresponding return of last year.	Present return.	Next preceding return.	Corresponding return of last year.
1	2	3	4	5	6	7	8	9	10	11	12	13	14
		Rs. A. P.	Rs. A. P.	Rs. A. P.	Rs. A. P.	Rs. A. P.	Rs. A. P.	Rs. A. P.	Rs. A. P.	Rs. A. P.	Rs. A. P.	Rs. A. P.	Rs. A. P.
1	Calcutta ...	5 4 0	5 4 0	5 0 0	3 12 0	3 12 0	4 0 0	3 12 0	3 12 0	3 12 0	2 8 0	2 10 0	2 6 0
2	Burdwan ...	4 7 0	4 6 0	4 12 0	3 6 0	3 5 0	3 8 0	...	...	...	...	...	...
3	Midnapore ...	4 0 0	4 0 0	4 0 0	3 2 0	3 2 0	3 5 0	...	...	...	...	...	...
4	Pabna ...	6 10 0	6 10 0	6 8 0	3 8 6	3 12 6	3 11 0	2 8 6	2 8 6	2 15 0	...	...	...
5	Rangpur ...	5 0 0	5 0 0	6 8 0	3 8 0	3 8 0	4 4 0	3 12 0	3 12 0	4 0 0	...	...	...
6	Dacca ...	4 4 0	4 4 0	4 12 0	3 8 0	3 8 0	4 2 0	3 0 0	3 0 0	3 8 0	2 0 0	2 0 0	2 8 0
7	Chittagong ...	...	...	...	3 6 0	3 4 0	3 4 0	...	...	...	...	...	...
8	Patna ...	4 2 6	3 15 0	4 6 0	3 13 0	3 10 0	3 3 0	2 13 6	2 13 0	2 15 0	2 0 0	2 1 0	2 5 0
9	Muzaffarpur ...	5 0 0	5 0 0	4 7 0	3 5 3	3 5 3	3 5 5	2 12 0	2 12 0	3 5 3	2 0 0	2 1 6	2 1 6
10	Bhagalpur ...	4 4 0	4 0 0	3 14 0	3 8 0	3 5 0	3 2 0	2 14 0	2 14 0	2 14 0	2 1 6	2 1 6	2 1 0
11	Cuttack ...	4 3 0	4 2 0	3 12 0	2 13 0	3 0 6	3 0 0	3 0 0	2 14 0	3 9 0	...	...	...
12	Ranchi ...	4 10 0	4 10 0	4 6 4	3 2 2	2 15 3	3 1 0	4 0 0 to 5 8 0	4 0 0 to 5 8 0	3 10 0 to 5 0 0	2 13 6	2 13 6	2 13 9

Calcutta,

The 21st July 1902.

JUAR OR CHOLUM (*Sorghum vulgare*).			BAJRA OR CUMBU (*Pennisetum typhoideum*).			MARUA OR RAGI (*Eleusine coracana*).			GRAM, CHANA, CHOLA, KADALAY, OR SUNAGA (*Cicer arietinum*).		
Present return.	Next preceding return.	Corresponding return of last year.	Present return.	Next preceding return.	Corresponding return of last year.	Present return.	Next preceding return.	Corresponding return of last year.	Present return.	Next preceding return.	Corresponding return of last year.
15	16	17	18	19	20	21	22	23	24	25	26
Rs. A. P.	Rs. A. P.	Rs. A. P.	Rs. A. P.	Rs. A. P.	Rs. A. P.	Rs. A. P.	Rs. A. P.	Rs. A. P.	Rs. A. P.	Rs. A. P.	Rs. A. P.
3 0 0	2 12 0	2 6 0	3 0 0	3 0 0	3 12 0	...	...	...	2 12 0	2 12 0	3 0 0
...	...	...	...	...	...	...	...	...	2 7 0	2 7 0	2 14 0
...	...	...	...	...	...	...	...	...	2 10 0	2 10 0	3 2 0
...	...	...	...	...	...	...	...	...	2 10 6	2 10 6	3 4 6
...	...	...	...	...	...	...	...	...	2 6 0	2 8 0	3 8 0
...	...	...	...	...	...	...	...	...	3 8 0	3 0 0	3 8 0
...	...	...	...	...	...	...	...	...	3 10 0	3 8 0	3 12 0
White. 2 13 6	2 8 0	2 5 0	...	...	...	...	...	...	1 15 6	2 0 0	2 9 0
Rakse. 1 14 0	2 0 0										
...	...	...	...	...	...	1 13 0	1 13 0	...	2 0 0	2 0 0	2 8 0
...	...	...	...	...	...	...	...	...	2 4 0	2 4 0	2 9 0
...	...	...	...	...	...	...	...	...	2 7 0	2 7 0	2 13 0
...	...	...	...	...	...	...	...	...	3 0 0 to 3 1 6	3 0 0	3 5 3 to 3 10 0

Indian-corn or maize (*Zea mays*).			Arhar dal or Thur—Cadjan pea (*Cajanus indicus*).			Linseed			Mustard and Rapeseed.		
Present return.	Next preceding return.	Corresponding return of last year.	Present return.	Next preceding return.	Corresponding return of last year.	Present return.	Next preceding return.	Corresponding return of last year.	Present return.	Next preceding return.	Corresponding return of last year.
27	28	29	30	31	32	33	34	35	36	37	38
Rs. A. P.	Rs. A. P.	Rs. A. P.	Rs. A. P.	Rs. A. P.	Rs. A. P.	Rs. A. P.	Rs. A. P.	Rs. A. P.	Rs. A. P.	Rs. A. P.	Rs. A. P.
...	...	...	4 0 0	4 0 0	4 4 0	7 0 0	7 0 0	6 12 0	5 0 0	5 0 0	5 4 0
...	...	...	3 5 0	3 5 0	4 0 0	...	...	...	4 12 0	4 12 0	4 9 0
									Black mustard.		
...	...	...	3 12 0	3 6 0 to 3 12 0	4 12 0	6 8 0	6 8 0	5 8 0	4 6 0 to 4 10 0	4 4 0 to 4 8 0	4 4 0 to 5 0 0
									Rapeseed.		
									4 14 0	5 0 0 to 5 2 0	4 6 0 to 4 8 0
...	...	...	4 1 0	4 1 0	5 5 0	6 4 0	6 6 0	6 4 0	4 7 0	4 6 0	5 4 0
3 0 0	3 0 0	3 0 0	4 8 0	4 8 0	5 4 0	...	...	...	4 8 0	4 8 0	5 8 0
...	...	...	4 0 0	4 0 0	4 0 0	...	...	...	...	...	...
...	...	...	4 12 0	4 8 0	5 0 0	...	...	...	4 12 0	4 12 0	5 4 0
1 14 0	2 0 0	2 8 0	2 4 0	2 7 6	2 10 0	6 0 0	6 0 0	5 10 0	4 6 0	4 3 0	5 0 0
2 0 0	2 0 0	2 5 6	2 10 6	2 10 6	2 15 3	...	...	...	...	...	...
									Rapeseed.		
2 4 0	2 4 0	2 6 6	3 3 0	3 2 6	3 14 0	6 0 0	6 8 0	...	3 8 0 to 4 0 0	4 6 0 Mustard 4 2 0	5 4 0
...	...	...	2 5 0	2 4 0	3 9 0	...	...	...	4 0 9	4 0 9	4 1 3
...	...	...	6 2 6 to 7 4 4	6 15 0 to 6 2 6	5 0 0 to 5 11 6	6 10 0	6 10 0	5 0 0	5 0 0	5 11 0 to 5 0 0	5 0 0

Til or jinjili seed.			Sugar (raw).			Cotton, cleaned.			Jute.		
Present return.	Next preceding return.	Corresponding return of last year.	Present return.	Next preceding return.	Corresponding return of last year.	Present return.	Next preceding return.	Corresponding return of last year.	Present return.	Next preceding return.	Corresponding return of last year.
39	40	41	42	43	44	45	46	47	48	49	50
Rs. A. P.	Rs. A. P.	Rs. A. P.	Rs. A. P.	Rs. A. P.	Rs. A. P.	Rs. A. P.	Rs. A. P.	Rs. A. P.	Rs. A. P.	Rs. A. P.	Rs. A. P.
4 12 0	5 0 0	4 12 0	4 4 0	4 8 0	4 4 0	16 0 0	16 0 0	16 0 0	5 4 0	5 4 0	5 8 0
...	...	...	3 8 0	3 5 0	3 10 0	21 0 0	20 0 0	14 8 0	...	...	...
...	...	...	3 4 0 to 3 8 0	3 4 0 to 3 8 0	3 12 0 to 4 0 0	20 0 0	20 0 0	20 0 0	...	...	...
...	...	...	3 4 0	3 4 0	4 8 0	21 0 0	21 0 0	21 0 0	4 10 0	4 4 0	...
...	...	...	4 0 0	4 0 0	5 12 0	...	...	...	4 0 0	4 0 0	4 8 0
...	...	...	4 8 0	5 0 0	6 0 0	...	...	...	4 0 0	4 4 0	5 0 0
...	...	...	5 0 0	5 0 0	6 0 0	15 0 0	15 4 0	14 0 0	...	...	...
5 12 0	6 0 0	5 0 0	2 8 0	2 12 0	3 8 0	15 0 0	15 0 0	16 0 0	3 8 0	3 12 0	3 6 0
...	...	...	2 5 6	1 14 6	2 10 6	...	...	...	...	...	...
...	...	...	4 0 0	3 10 0	4 13 0	19 0 0	19 0 0	16 13 0	...	...	...
4 7 6	4 7 6	4 8 6	4 2 0	3 12 0	4 8 0	20 0 0	20 0 0	22 0 0	...	...	...
...	...	...	3 10 0 to 4 0 0	3 3 0 to 3 10 0	4 7 0 to 5 0 0	20 0 0	20 0 0	22 12 0	...	...	...

Ghi (clarified butter).			Tobacco leaf.			Hides (cow).			Grass.		
Present return.	Next preceding return.	Corresponding return of last year.	Present return.	Next preceding return.	Corresponding return of last year.	Present return.	Next preceding return.	Corresponding return of last year.	Present return.	Next preceding return.	Corresponding return of last year.
51	52	53	54	55	56	57	58	59	60	61	62
Rs. A. P.	Rs. A. P.	Rs. A. P.	Rs. A. P.	Rs. A. P.	Rs. A. P.	Rs. A. P.	Rs. A. P.	Rs. A. P.	Rs. A. P.	Rs. A. P.	Rs. A. P.
						Per 100 pieces.					
39 0 0	39 0 0	40 0 0	8 8 0	8 8 0	9 0 0	250 0 0	250 0 0	250 0 0	1 0 0	1 0 0	1 0 0
32 0 0	34 0 0	42 0 0	...	...	...	...	...	...	...	...	...
			Madhukhali.			Uncleaned per piece.					
31 8 0	33 0 0 to 33 4 0	40 0 0	5 4 0 to 5 8 0		6 0 0	0 12 0 to 2 7 0	1 6 0 to 2 6 0	1 0 0 to 2 2 0	...	...	...
			Pulta.			Cleaned per piece.					
			6 4 0	6 4 0	7 8 0	1 0 0 to 2 11 0	1 10 0 to 2 10 0	1 2 0 to 2 4 0			
53 0 0	53 0 0	53 0 0	6 8 0	6 12 0	8 0 0	...	...	...	...	...	...
33 0 0	32 0 0	42 0 0	10 0 0	10 0 0	9 0 0	...	...	...	0 2 6	0 2 6	0 2 6
						Per maund.					
40 0 0	40 0 0	43 0 0	7 0 0	7 0 0	9 0 0	20 0 0	20 0 0	25 0 0	0 3 0	0 3 0	0 3 0
						Per maund.					
35 0 0	31 0 0	41 0 0	10 0 0	10 0 0	12 8 0	16 8 0	16 8 0	18 8 0	...	...	...
30 0 0	30 0 0	34 0 0	4 0 0	4 0 0	3 0 0	...	...	...	0 6 0	0 6 0	0 4 0
29 1 6	29 1 6	35 9 0	8 0 0	8 0 0	8 0 0	...	...	...	...	...	...
32 0 0	33 0 0	39 0 0	8 0 0	8 0 0	...	...	...	...	...	...	...
						Per maund.					
36 0 0	35 4 0	45 12 0	4 4 0	4 4 0	4 0 0	25 0 0	25 0 0	25 0 0	0 8 0	0 8 0	0 8 6
						Per piece.					
32 0 0 to 37 3 0	36 0 0 to 40 0 0	36 5 3 to 44 2 0	6 10 0 to 13 5 3	6 10 0 to 13 5 2	6 10 6 to 13 0 0	1 4 0 to 2 8 0	1 4 0 to 2 8 0	1 0 0	0 5 3	0 5 3	0 4 0

in the undermentioned Marts of Bengal on the 15th July 1902.

STRAW.			JUAR STALKS.			PRICES PER MAUND OF 40 STANDARD SEERS.									MARTS.
						IRON.			FIREWOOD.			SALT.			
Present return.	Next preceding return.	Corresponding return of last year.	Present return.	Next preceding return.	Corresponding return of last year.	Present return.	Next preceding return.	Corresponding return of last year.	Present return.	Next preceding return.	Corresponding return of last year.	Present return.	Next preceding return.	Corresponding return of last year.	
63	64	65	66	67	68	69	70	71	72	73	74	75	76	77	78
Rs. A. P.	Rs. A. P.	Rs. A. P.	Rs. A. P.	Rs. A. P.	Rs. A. P.	Rs. A. P.	Rs. A. P.	Rs. A. P.	Rs. A. P.	Rs. A. P.	Rs. A. P.	Rs. A. P.	Rs. A. P.	Rs. A. P.	
0 12 0	0 12 0	1 0 0	...	...	...	5 4 0	5 4 0	5 4 0	0 8 0	0 8 0	0 8 0	Panga. 3 6 0	3 6 0	3 8 0	1. Calcutta.
0 10 0	0 10 0	0 14 0	...	...	...	...	...	...	0 8 0	0 8 0	0 6 0	Crushed. 3 4 0	3 3 0	3 10 0	2. Burdwan.
0 4 8	0 4 8	0 8 4	...	...	...	3 12 0 to 4 4 0	3 12 0 to 4 4 0	4 0 0 to 5 0 0	0 4 0	0 4 0	0 4 0	Panga. 3 8 0	3 7 0	3 13 0	3. Midnapore.
1 0 0	1 0 0	1 2 0	...	...	...	7 0 0	7 0 0	7 12 0	0 0	0 0 0	0 5 0	3 12 0	3 12 0	3 14 6	4. Pabna.
0 7 0	0 7 0	0 7 0	...	...	...	7 0 0	7 0 0	6 0 0	0 5 0	0 5 0	0 5 0	Panga. 3 12 0	3 12 0	4 0 0	5. Rangpur.
...	...	...	...	...	...	5 8 0	5 8 0	6 0 0	0 5 3	0 5 3	0 5 6	Panga. 3 12 0	3 9 0	3 12 0	6. Dacca.
...	...	...	...	...	...	5 0 0	4 12 0	5 8 0	...	...	...	Panga. 3 8 0	3 6 0	4 0 0	7. Chittagong.
...	...	...	...	...	...	5 0 0	5 0 0	5 0 0	0 7 0	0 7 0	0 6 0	3 10 0	3 10 0	3 12 0	8. Patna.
...	...	...	...	...	...	5 11 6	5 11 6	5 11 6	0 4 0	0 4 0	0 4 0	Panga. 4 0 0	4 0 0	4 1 6	9. Muzaffarpur.
...	...	...	...	...	...	5 0 0	5 0 0	5 8 0	0 5 9	0 6 0	0 5 9	Panga. 3 10 0	3 9 0	3 13 0	10. Bhagalpur.
0 6 0	0 6 0	0 8 0	...	...	...	4 4 0	4 1 0	4 4 0	0 4 0	0 4 0	0 4 0	Karkatch. 3 0 0	3 0 0	3 0 0	11. Cuttack.
0 6 0 to 0 10 0	0 4 0 to 0 6 0	0 4 0 to 0 6 0	...	...	...	5 10 0	5 10 0	5 11 6	0 4 0	0 4 0	0 4 0	Panga. 4 2 0	4 5 0	4 10 0	12. Ranchi.

W. C. MACPHERSON,
Offg. Secretary to the Govt. of Bengal.

GOVERNMENT OF BENGAL, IRRIGATION DEPARTMENT.

Approximate return of traffic on the Circular and Eastern Canals for the week ending Saturday, the 19th July 1902, as compared with the corresponding week of the previous year.

Nature of Cargo.	Week ending Saturday, the 19th July 1902.			Week ending Saturday, the 20th July 1901.		
	Number of boats.	Weight of cargo.	Tollage.	Number of boats.	Weight of cargo.	Tollage.
		Mds.	Rs.		Mds.	Rs.
Rice and paddy	353	39,525	503	240	85,710	414
Jute	25	19,050*	212	26	10,325†	111
Firewood	52	44,600	678	66	25,475	383
Other articles	480	1,13,160	1,242	605	1,24,285	1,516
Total ...	910	2,16,385	2,635	937	1,95,795	2,424

* Weight by canal measurement, 19,262½ maunds.
† Ditto ditto, 12,92 „

Results of the Meteorological Observations taken at the Alipore Observatory from 13th to 19th July 1902.

Month.	Date	Maximum in sun.	Number of hours of bright sunshine.	Mean pressure barometer at 32° Fahr.	Temperature.				Hygrometry.				Wind.		Rain.	Weather.
					Mean	Maximum.	Range.	Minimum.	Mean wet bulb.	Vapour tension.	Dew point.	Humidity.	Prevailing direction.	Miles recorded.		
1902.				Inches	°	°	°	°	°	Inch.		%			Inches.	
July	13th	152·9	6·2	29·440	85·7	98·1	13·9	79·2	82·7	1·081	81·6	88	ENE and SE by E	81	0·07	Partially cloudy, o, d, t, ⚡.
,,	14th	150·1	6·7	·392	85·7	91·8	11·6	80·2	81·5	1·022	79·9	84	SE by E, ENE and NE.	110	Nil	Partially cloudy.
,,	15th	146·7	2·2	·255	84·4	89·5	9·2	80·3	81·0	1·013	79·6	86	NE and NNE ..	176	0·47	Chiefly cloudy, o, p.
,,	16th	128·3	0·5	·280	83·1	86·7	7·6	79·1	80·1	0·991	78·9	87	N by E and S ...	217	0·26	Chiefly cloudy, o, g, d, p.
,,	17th	106·0	Nil	·470	82·9	84·2	3·9	80·3	79·4	0·961	78·0	85	SSW and SW ...	204	Nil	Cloudy, o.
,,	18th	103·0	Nil	·529	81·2	83·2	4·8	78·4	77·5	·895	75·9	84	SW by S and SW	211	0·07	Cloudy, o, g, d.
,,	19th	148·9	4·1	·540	84·8	89·7	10·5	79·2	78·7	·900	76·0	76	SW by W and WSW.	185	0·01	Chiefly cloudy, d.

	Inches.
The mean pressure of the seven days	29·415
The average pressure of the corresponding period for 24 years, Surveyor-General's Office	29·518
	Hours.
The total number of hours of bright sunshine	19·8
The maximum possible number of hours of sunshine	93·4
	°
The mean temperature of the seven days	84 0
The average temperature of the corresponding period for 24 years, Surveyor-General's Office	83·5
The extreme variation of temperature	14·7
The maximum temperature	93·1
	Miles.
The highest velocity of the wind in one hour	15
	%
The mean relative humidity	84
The average relative humidity of the corresponding period for 24 years, Surveyor-General's Office	86
	Inches.
The total fall of rain from 13th to 19th July 1902	0·88
The average fall of the corresponding period for 24 years, Surveyor-General's Office	2·76
The total fall from 1st January to 19th July 1902	29·80
The average fall of the corresponding period for 24 years, Surveyor-General's Office	28·98

The mean pressure, temperature, etc., are deduced from the traces of the Barograph and Thermograph, and from eye observations.

The maximum and minimum temperatures are obtained from self-registering thermometers. All the thermometers are verified and the readings have been corrected to a standard constructed and verified at the Kew Observatory. They are exposed under a thatched shed open at the sides, and are suspended four feet above the ground.

The barometer readings are corrected approximately to those of the standard, Newman's No. 86, formerly at the Surveyor-General's Office.

The hygrometric elements are obtained from Tables III, IV, and V of the official tables computed in the Meteorological Office, and based on Regnault's modifications of August's formula.

The directions and the movement of the wind are taken from the trace of a Beckley's anemograph.

The mouth of the rain-gauge is one foot above the ground.

o, overcast; g, gloomy; d, drizzling rain; p, passing temporary showers; t, thunder; ⚡, lightning.

METEOROLOGICAL OFFICE, GOVT. OF INDIA,
Alipore (Calcutta), the 21st July 1902.

G. W. KÜCHLER,
for *Meteorological Reporter to the Govt. of India and Director-General of Indian Observatories.*

BENGAL AND NORTH-WESTERN RAILWAY.

Statement of goods traffic for the month of February 1902 compared with the corresponding period in 1901.

Description of Goods.	1901.		1902.		Increase.		Decrease.		Explanation of fluctuations by the Traffic Manager.
	Tons.	Rs.	Tons.	Rs.	Tons.	Rs.	Tons.	Rs.	
I.—Apparel, including drapery, haberdashery, millinery, uniforms, accoutrements, boots and shoes.	32	380	44	577	12	197	.....	.....	
II.—Coal and coke carried for the Public and Foreign Railways.	2,950	5,752	6,517	10,613	3,567	4,861	.....	.....	Coal traffic to the Eastern Bengal State Railway and Dacca *vid* Mokameh Ghat and Katihar.
III.—Cotton—									
1. Raw	38	278	88	674	50	396	.....	.....	
2. Manufactured—									
(*a*) } Twist and yarn. { European	24	144	21	139	.....	.....	3	5	
(*b*) } { Indian ...	308	2,197	334	3,162	26	965	.....	.....	
(*c*) } Piece-goods { European	1,731	12,866	1,257	10,271	.....	.....	474	2,595	
(*d*) } { Indian ...	493	3,769	376	3,620	.....	.....	117	149	
(*e*) Others	.....	.....	2	15	2	15	.....	.....	
IV.—Chemicals, excepting saltpetre	.....	.....	19	167	19	167	.....	.....	
V.—Drugs—									
1. Intoxicating, other than opium.	4	42	42	228	38	186	.....	.....	
2. Non-intoxicating—									
(*a*) Medicinal preparations.	.....	.....	.....	.....	.....	.....	.....	.....	
(*b*) Others	169	1,691	356	2,788	187	1,097	.....	.....	
VI.—Dyes and Tans—									
1. Al (Morinda citrifolia)	.....	.....	.....	.....	.....	.....	.....	.....	
2. Alizarine and aniline dyes.	2	20	4	63	2	43	.....	.....	
3. Cutch	1	5	5	35	4	30	.....	.....	
4. Indigo	46	305	306	2,802	260	2,497	.....	.....	
5. Myrabolams	1	12	5	46	4	34	.....	.....	
6. Tanning barks	29	162	129	1,036	100	874	.....	.....	
7. Turmeric	404	3,037	454	3,667	50	630	.....	.....	
8. Others	31	206	115	479	84	273	.....	.....	
VII.—Fodder—									
1. Oilcake	354	812	402	852	48	40	.....	.....	
2. Hay, straw and grass...	455	3,499	901	3,561	446	62	.....	.....	
VIII.—Fruits and vegetables, fresh	1,570	3,428	401	852	.....	.....	1,169	2,576	
IX.—Grain and Pulse—									
1. Gram and pulse ...	1,980	6,943	3,003	12,640	1,023	5,697	.....	.....	Demand in Chapra district.
2. Jawar and bajra ...	677	2,053	793	3,334	116	681	.....	.....	
3. } Rice { in the husk ...	4,947	16,371	3,430	16,357	.....	.....	1,517	14	
4. } { not in the husk	29,480	1,22,630	15,567	73,146	.....	.....	13,913	49,484	Less production in Tirhut.
5. Wheat	1,194	4,635	936	4,851	.....	216	228	.....	
6. Wheat-flour	128	962	115	1,010	.....	48	13	.....	
7. Makai	8,064	31,558	8,585	46,915	521	15,357	.....	.....	
8. Others	4,507	17,603	3,974	22,281	.....	4,678	533	.....	
X.—Hides and Skins—									
1. Hides of cattle—									
(*a*) Dressed or tanned	....	... ..	1	5	1	5	.....	.....	
(*b*) Raw	765	4,613	604	2,364	.....	.....	161	2,249	
2. Skins of sheep and other animals—									
(*a*) Dressed or tanned	.....	.....	1	4	1	4	.....	.....	
(*b*) Raw	240	1,277	155	811	.....	.....	91	466	
XI.—Horns	13	80	18	142	5	112	.....	.....	
XII.—Hemp (Indian) and other fibres, excluding jute.	2	7	66	335	64	328	.....	.....	
XIII.—Jute—									
1. Raw	148	857	138	667	.....	.....	10	190	
2. Gunny-bags and cloth	1,053	6,242	1,194	6,395	141	153	.....	.....	
XIV.—Lac	150	637	151	500	1	.....	.....	137	
XV.—Leather—									
1. Unwrought	.....	.....	.....	.....	.....	.....	.....	.....	
2. Wrought, excepting boots and shoes.	2	7	3	26	1	19	.....	.....	
XVI.—Liquors—									
1. Ale and Beer	5.	44	47	176	42	132	.....	.....	
2. Spirits of all kinds, including country spirits.	.... .	.....	1	7	1	7	.....	.....	
3. Wine	17	166	19	191	2	25	.....	.....	
4. All other sorts, including toddy and fermented liquor, other than ale and beer.	.....	.....	.....	.....	.....	.....	.....	.....	
XVII.—Metals—									
1. Brass, unwrought ...	19	152	19	122	.....	.....	.....	30	
2. ,, wrought ...	238	1,040	124	900	.....	.....	114	59	
3. Copper, unwrought ...	.....	.....	.....	.....	.....	.....	.....	.....	
4. ,, wrought ...	40	242	17	133	.....	.....	23	109	
5. Iron and steel—									
(*a*) Cast	11	70	92	578	81	508	.....	.....	
(*b*) Unwrought ...	13	66	31	119	18	53	.....	.....	
(*c*) Wrought	641	2,203	727	3,988	86	1,780	.....	.....	
(*d*) Manufactures ...	575	1,419	276	1,591	.....	172	299	.....	
6. Others	185	1,276	213	1,504	28	228	.....	.....	
XVIII.—Oils—									
1. Kerosine	826	2,883	1,248	4,870	422	1,987	.....	.....	Demand.
2. Castor	26	118	14	126	.....	8	12	.....	
3. Cocoanut	2	8	8	42	6	34	.....	.....	
4. Mustard and rape ...	17	107	91	375	74	268	.....	.....	
5. Others	64	897	67	222	3	.....	.....	675	

Description of Goods.	1901.		1902.		Increase.		Decrease.		Explanation of fluctuations by the Traffic Manager.
	Tons.	Rs.	Tons.	Rs	Tons.	Rs.	Tons.	Rs	
XIX.—Oilseeds—									
1. Castor	126	98	110	350	..	252	16	.....	
2. Earthnuts	.....	.....	.....	.....	.....	.....	.....	.....	
3. Linseed	61	223	1,240	3,026	1,179	3,702	.....	.....	
4. Poppy	.....	.....	10	48	10	48	.....	.....	Demand in Calcutta and Bombay.
5. Rape and mustard	2,832	17,048	4,672	27,085	1,820	10,037	.....	.....	
6. Til or jinjili	72	314	209	1,162	137	848	.....	.....	
7. Others	206	1,671	1,827	8,315	1,561	6,544	.....	.....	
XX.—Opium	8	28	44	371	41	.....	.....	399	
XXI.—Paper and Pasteboard	41	103	45	256	4	93	.....	.....	
XXII.—Provisions—									
1. Dried fruits and nuts	60	317	88	1,031	28	314	.....	.....	
2. Ghee	581	5 179	563	4,278	.....	.....	18	907	
3. Others	273	1,397	1,390	3,821	1,128	2,424	.....	.....	
XXIII.—Railway Plant and Rolling Stock carried for the Public and Foreign Railways—									
1. Locomotive engines and tenders and parts thereof.	.....	.....	.....	.....	.....	.....	.....	.....	
2. Carriages and trucks and parts thereof.	.....	.....	.....	.....	.....	.....	.....	.....	
3. Materials—									
(a) Steel rails and fish-plates.	.....	.....	.....	.....	.....	.....	.....	.....	
(b) Sleepers and keys of steel and cast-iron.	1	7	16	40	15	33	.....	.....	
(c) Others	.....	.....	.....	.....	.....	.....	.....	.....	
XXIV.—Salt	5,895	17,086	10,411	24,075	4,536	6,989	.....	.....	
XXV.—Saltpetre and other saline substances—									
1. Saltpetre	1,084	2,695	1,674	5,316	590	2,621	.....	.....	Demand in Calcutta.
2. Other saline substances	15	10	377	557	362	547	.....	.....	
XXVI.—Silk—									
1. Raw—									
(a) Foreign	.....	.....	.....	.....	.....	.....	.....	.....	
(b) Indian	1	6	.....	.....	.....	.....	1	6	
2. Piece-goods—									
(a) Foreign	.....	.....	.....	.....	.....	.....	.....	.....	
(b) Indian			.....	.....	.....	.....	.....	.....	
XXVII.—Spices—									
1. Betelnuts	22	160	245	1,953	223	1,703	.....	.....	
2. Cardamoms	13	168	96	1,034	83	866	.....	.....	
3. Chillies	359	2,430	629	5,896	270	3,460	.....	.....	Opening of extensions.
4. Ginger	19	154	47	428	28	274	.....	.....	
5. Pepper	11	92	32	294	21	202	.....	.....	
6. Others	572	5,338	204	2,052	.....	.....	368	3,286	
XXVIII.—Stone and lime	498	1,771	1,141	2,722	645	951	.....	.....	
XXIX.—Sugar—									
1. Refined or crystallised, including sugarcandy.	1,675	8,419	1,487	10,203		1,784	88	.....	Better leads.
2. Unrefined—									
(a) Sugar	2,600	11,636	434	3,468	.....	.....	2,166	8,168	Less demand in Nagpur line.
(b) Gur, rab, jaggery, molasses and other saccharine produce.	8,508	43,117	11,091	41,245	2,583	.....	.....	1,872	
XXX.—Tea—									
1. Foreign	.....	.....	.....	.....	.....	.....	.....	.....	
2. Indian	1	5	27	203	26	198	.....	.....	
XXXI.—Tobacco—									
1. Unmanufactured	533	3,660	559	5,075	26	1,415	.....	.....	
2. Manufactured—									
(a) Cigars	4	55	2	30	.....	.....	2	25	
(b) Other sorts	13	93	81	407	68	314	.....	.....	
XXXII.—Wood—									
1. Timber, unwrought	85	262	530	1,159	445	897	.....	.....	
2. Logs	1,347	2,893	721	1,229	.....	.....	626	1,064	
3. Poles	41	73	.....	.....	.....	.....	41	73	
4. Manufactures	245	1,254	115	752	.....	.....	130	502	
XXXIII.—Wool—									
1. Raw	.....	.....	3	31	3	31	.....	.....	
2. Manufactured—									
(a) Carpets and rugs	1	7	3	34	2	27	.....	.....	
(b) (c) Piece-goods { European			1	9	1	9	.....	.....	
(c) Piece-goods { Indian	2	20	4	39	2	19	.....	.....	
(d) Other sorts of manufactures.			1	11	1	11	.....	.....	
XXXIV.—All other articles of merchandise—									
1. Indigo-seed	2,151	13,237	1,872	12,422	.....	.....	279	815	
2. Firewood	1,731	8,685	1,054	2,360	.....	.....	1,077	3,325	
3. Others not specified above.	5,785	5,027	496	17,575	.....	12,548	3,289		
Total	101,102	4,17,739	97,693	4 42,878	23,369	1,94,319	26,778	79,160	

Gorakhpur, *the 16th July 1902.*

J. Lightfoot,
Chief Auditor.

SEGOWLIE-RAKSAUL BRANCH RAILWAY.

Statement of Goods Traffic for the month of February 1902 compared with the corresponding period in 1901.

Description of Goods.	1901.		1902.		Increase.		Decrease.		Explanation of fluctuations by the Traffic Manager.
	Mds.	Rs.	Mds.	Rs.	Mds.	Rs.	Mds.	Rs.	
I.—Apparel, including drapery, haberdashery, millinery, uniforms, accoutrements, boots and shoes.	23	3	20	3	...	...	3	...	
II.—Coal and Coke carried for the Public and Foreign railways.	1,341	19	436	6	...	...	905	13	
III.—Cotton—									
1. Raw	309	13	274	26	...	13	35	...	
2. Manufactured—									
(a) Twist and yarn { European	...	...	2	1	2	1	...	...	
(b) Twist and yarn { Indian ...	503	28	510	20	10	...	...	8	
(c) Piece-goods ... { European	1,850	125	1,751	112	...	...	99	13	
(d) Piece-goods ... { Indian...	959	68	1,028	58	60	...	...	10	
(e) Others	...	...	...	...	...	...	...	...	
IV.—Chemicals, excepting saltpetre	...	...	...	...	...	...	...	...	
V.—Drugs—									
1. Intoxicating, other than opium.	...	...	...	...	...	...	...	...	
2. Non-intoxicating—									
(a) Medicinal preparations	...	...	...	...	...	...	...	...	
(b) Others	75	6	81	3	6	...	...	3	
VI.—Dyes and Tans—									
1. Al (Morinda citrifolia) ...	...	...	...	...	...	...	...	...	
2. Alizarine and aniline dyes	...	...	...	...	...	...	...	...	
3. Cutch	...	...	9	1	9	1	...	...	
4. Indigo	8	1	27	2	19		...	...	
5. Myrabolams	...	...	...	...	...	...	...	...	
6. Tanning barks	...	...	...	...	...	...	...	...	
7. Turmeric	...	...	...	...	...	...	...	...	
8. Others	10	2	70	6	69	4	...	...	
VII.—Fodder—									
1. Oilcake	...	...	...	...	...	...	...	...	
2. Hay, straw and grass ...	...	...	...	...	...	...	...	...	
VIII.—Fruits and vegetables, fresh ...	2	1	178	3	176	2	...	...	
IX.—Grain and Pulse—									
1. Gram and pulse	449	5	520	8	71	3	...	...	
2. Jawar and bajra	...	...	4	1	4	1	...	...	
3. Rice { in the husk ...	11,280	222	5,400	114	...	...	5,880	108	Defective crops.
4. Rice { not in the husk ...	14,477	190	8,043	124	...	...	6,434	66	Defective crops.
5. Wheat	226	5	...	...	...	...	226	5	
6. Wheat-flour	6	1	43	1	37	...	...	...	
7. Makai	...	...	30	1	30	1	...	...	Ditto.
8. Others	796	11	3	1	...	...	793	10	Ditto.
X.—Hides and Skins—									
1. Hides of cattle—									
(a) Dressed or tanned ...	...	...	...	...	...	...	...	...	
(b) Raw	312	10	236	5	...	...	76	5	
2. Skins of sheep and other animals—									
(a) Dressed or tanned ...	...	...	...	...	...	...	...	...	
(b) Raw	90	3	210	11	111	8	...	...	
XI.—Horns	...	...	...	...	...	...	...	...	
XII.—Hemp (Indian) and other fibres, excluding jute.	...	...	200	4	200	4	...	...	
XIII.—Jute—									
1. Raw	...	...	...	...	...	...	...	...	
2. Gunny-bags and cloth ...	376	10	445	15	69	5	...	...	
XIV.—Lac	12	2	23	2	11	...	...	...	
XV.—Leather—									
1. Unwrought	...	...	...	...	...	...	...	...	
2. Wrought, excepting boots and shoes.	...	...	15	1	15	1	...	...	
XVI.—Liquors—									
1. Ale and Beer	...	...	...	...	...	...	...	...	
2. Spirits of all kinds, including country spirits.	...	...	...	...	...	...	...	...	
3. Wine	3	1	3	1	...	...	...	...	
4. All other sorts, including toddy and fermented liquor, other than ale and beer.	...	...	...	...	...	...	...	...	
XVII.—Metals—									
1. Brass, unwrought	13	1	...	...	...	...	13	1	
2. ,, wrought	153	14	116	6	..	..	39	8	
3. Copper, unwrought ..	...	...	...	...	...	...	..	...	
4. ,, wrought	8	2	...	...	...	...	8	2	
5. Iron and steel—									
(a) Cast	34	1	317	8	283	7	...	...	
(b) Unwrought	...	...	...	...	...	...	...	..	
(c) Wrought	1,445	41	1,805	52	360	11	...	...	Demand in Nepal.
(d) Manufactures	234	17	383	18	149	1	...	...	Demand in Nepal.
6. Others	16	1	101	7	85	6	...	...	Demand in Nepal.
XVIII.—Oils—									
1. Kerosine	668	32	5,164	100	4,496	18	...	...	
2. Castor	..	...	21	1	21	1	...	...	
3. Cocoanut	15	2	... 7	1	..	.	8	1	
4. Mustard and rape	..	...	...	...	...	...	...	...	
5. Others	21	2	42	5	21	3	...	...	

Description of Goods.	1901.		1902.		Increase.		Decrease.		Explanation of fluctuations by the Traffic Manager.
	Mds.	Rs.	Mds.	Rs.	Mds.	Rs.	Mds.	Rs.	
XIX.—Oilseeds—									
1. Castor	...	...	...	...	...	...	...	...	
2. Earthnuts	...	...	...	...	...	...	...	...	
3. Linseed	...	...	437	10	437	10	...	...	
4. Poppy	...	...	...	...	...	...	...	...	
5. Rape and mustard	983	19	180	4	...	...	783	15	Stocks cleared in previous month.
6. Til or jinjili	2	1	...	...	...	...	2	1	
7. Others	...	...	38	2	38	2	...	...	
XX.—Opium	...	...	...	...	...	...	...	...	
XXI.—Paper and pasteboard ...	7	1	19	3	12	2	...	...	
XXII.—Provisions—									
1. Dried fruits and nuts ...	36	2	177	...	141	...	...	13	
2. Ghee	24	2	29	1	5	...	...	1	
3. Others	48	3	1,130	59	1,082	56	...	...	
XXIII.—Railway plant and rolling-stock carried for the public and foreign railways—									
1. Locomotive engines and tenders and parts thereof.	...	...	...	...	...	...	...	...	
2. Carriages and trucks and parts thereof.	...	...	...	...	...	...	...	...	
3. Materials—									
(a) Steel rails and fish-plates.	...	...	...	...	...	...	...	...	
(b) Sleepers and keys of steel and cast-iron.	...	...	...	...	...	...	...	...	
(c) Others	...	...	...	...	...	...	...	...	
XXIV.—Salt	2,011	41	3,742	81	1,731	40	...	...	
XXV.—Saltpetre and other saline substances—									
1. Saltpetre	...	...	...	...	...	...	...	...	
2. Other saline substances ...	...	...	...	...	...	...	...	...	
XXVI.—Silk—									
1. Raw—									
(a) Foreign	...	...	...	...	...	...	...	...	
(b) Indian	...	...	...	...	...	...	...	...	
2. Piece-goods—									
(a) Foreign	...	...	...	...	...	...	...	...	
(b) Indian	...	...	...	...	...	...	...	...	
XXVII.—Spices—									
1. Betelnuts	481	29	271	15	...	...	210	14	
2. Cardamoms	...	...	...	...	...	...	...	...	
3. Chillies	...	...	115	4	115	4	...	...	
4. Ginger	...	...	...	...	...	...	...	...	
5. Pepper	...	...	27	3	27	3	...	...	
6. Others	57	2	114	6	57	4	...	...	
XXVIII.—Stone and lime	93	4	7	1	...	...	86	3	
XXIX.—Sugar—									
1. Refined or crystallized, including sugarcandy.	200	16	190	7	...	...	70	9	
2. Unrefined—									
(a) Sugar	...	...	...	...	...	...	...	...	
(b) Gur, rab, jaggree, molasses, and other saccharine produce.	197	5	...	...	...	...	197	5	
XXX.—Tea—									
1. Foreign	...	...	...	...	...	...	...	...	
2. Indian	...	...	1	1	1	1	...	...	
XXXI.—Tobacco—									
1. Unmanufactured ...	147	8	105	5	...	...	42	3	
2. Manufactured—									
(a) Cigars	84	9	40	4	...	...	44	5	
(b) Other sorts ...	...	...	...	...	...	...	...	...	
XXXII.—Wood—									
1. Timber, unwrought ...	...	...	1,541	24	1,541	24	...	...	} Larger export from Nepal.
2. Logs	330	5	2,810	39	2,471	34	...	...	
3. Poles	...	...	...	...	...	...	...	...	
4. Manufactures	...	...	34	4	25	4	...	...	
XXXIII.—Wool—									
1. Raw	...	...	...	...	...	...	...	...	
2. Manufactured—									
(a) Carpets and rugs ...	...	...	...	...	...	...	...	...	
(b) } Piece-goods { European	...	...	20	1	20	1	...	...	
(c) } Piece-goods { Indian	3	1	...	...	...	...	3	1	
(d) Other sorts of manufactures.	7	1	...	...	...	...	7	1	
XXXIV.—All other articles of merchandise—									
1. Indigo-seed	...	...	...	...	...	...	...	...	
2. Firewood	...	...	...	...	...	...	...	...	
3. Others not specified above	14,777	344	2,994	163	...	...	11,783	181	
Total ...	55,231	1,382	41,510	1,154	14,031	277	27,746	505	

J. Lightfoot,
Chief Auditor.

Gorakhpur, *the 18th July 1902.*

Weekly Return of Traffic Receipts on Indian Railways

EAST INDIAN RAILWAY.

Approximate Return of Traffic for the last 9 days of June 1902 on 1,905·37 miles open.

	Coaching Traffic.		Merchandise and Mineral Traffic.		Other earnings (estimated).	Total earnings.	Traffic Train-miles run.		
	Number of passengers.	Coaching receipts.	Weight carried.	Receipts.			Coaching.	Merchandise.	Total.
		Rs. A. P.	Mds. S.	Rs. A. P. (a)	Rs. A. P.	Rs. A. P.			
Total traffic for the period ...	538,371	5,08,309 10 0	62,24,493 20	10,66,724 4 0	36,321 0 0	16,11,354 14 0	140,049	242,096	382,145
Or per mile of railway ...	.....	266 12 6	.....	559 13 7	19 1 0	845 11 1	.....	.....	.....
For previous 24½ weeks of half-year.	9,898,083*	94,33,293 2 0*	14,19,74,343 30†	2,42,37,881 8 0†	4,97,456 0 0‡	3,41,68,630 10 0	2,652,431§	5,107,455§	7,759,886
Total for 25½ weeks ...	10,436,359	99,41,601 12 0	14,81,98,837 10	2,53,04,605 12 0	5,33,777 0 0	3,57,79,984 8 0	2,792,480	5,349,551	8,142,031
Comparison.									
Total for corresponding 8 days of previous year.	400,320§	4,53,544 2 8	64,06,777 20	11,80,549 3 2	26,462 15 10	16,60,556 5 8	121,042§	237,962§	359,007§
Per mile of railway corresponding period of previous year.	.....	246 13 4	.....	642 7 10	14 6 5	903 11 7	.....	.....	.....
Total for corresponding 26 weeks of previous year.	10,299,222	1,00,24,348 8 1	14,44,48,240 30	2,52,12,645 14 11	5,55,404 2 4	3,57,92,398 9 4	2,750,484	5,271,295§	8,021,779§

(a) The decrease is chiefly in coal

* Added number of passengers 5,887 and deducted Rs. 7,817 on account of difference between the approximate and audited figures for the week ended 24th May 1902.

* 541 and Rs. 2,965 supplemental figures for 31st March 1902.

* 8,775 and Rs. 48,479 special and extra troop trains, &c., not included in previous returns.

* maunds 2,52,537 and Rs. 4,952 difference between the approximate and audited figures for the week ended 24th May 1902.

† 84,435 and Rs. 38,893 supplemental figures for 31st March 1902.

† 90,000 and Rs. 22,000 foreign inward invoices not included in previous returns.

† 1,80,000 and Rs. 40,000 adjustments in connection with Foreign Railways' Division sheets.

† Deducted Rs. 2,000 rebooking freight to be written off.

† Rs. 50,000 estimated amount of outstandings relating to the half-year ended 31st December 1901.

† Rs. 31,000 forwarded traffic suspense account.

† Rs. 57,000 traffic carried in excess over E. I. Ry. route reserved for payment to Foreign Railways.

† Rs. 10,48,000 rebate on coal for the half-year.

† Rs. 16,000 demurrage to be written off.

† Rs. 40,000 estimated amount of overcharges to be taken credit for by stations.

‡ Added Rs. 539 telegraph earnings of the S. B. Ry. for the half-year creditable to the E. I. Ry. proper.

‡ Rs. 310 difference between the approximate and audited figures for the week ended 24th May 1902.

‡ Rs. 3,133 supplemental figures for 31st March 1902.

‡ Rs. 1,31,181 rents of dwelling-houses and stations and unpaid or unclaimed salaries, &c., &c., not included in previous returns.

‡ Deducted Rs. 2,57,665 hire and demurrage, hire of vehicles and hire of locomotives which have been shewn as a credit to expenditure.

§ Audited figures up to 24th May 1902.

1902. Abstract of progressive weekly returns of all earnings for 1902 in comparison with 1901.

Open mileage.	Period.	Coaching Traffic.		Merchandise and Mineral Traffic.		Other earnings.	Total.	Per mile of railway.	Train mileage.	
		No. of passengers.	Rs.	Mds.	Rs.	Rs.	Rs.	Rs.	No.	Rate. Rs. A. P.
* 1,837·46	11 days of Jan.	514,285	5,30,478	87,38,287	16,37,551	35,240	22,03,269	1,199	477,511	4 9 10
* 1,837·46	Week ended 18th ,,	372,213	3,44,786	50,37,626	9,42,201	22,393	13,09,470	713	301,302	4 5 6
* 1,838·04	,, ,, 25th ,,	364,471	3,57,440	62,68,836	10,66,158	27,348	14,50,946	789	313,092	4 10 2
* 1,838·04	,, ,, 1st Feb. ...	350,913	3,61,584	58,41,061	10,58,973	23,674	14,45,231	786	309,272	4 10 9
* 1,838·04	,, ,, 8th ,, ...	401,030	4,36,654	54,35,792	9,91,456	24,720	14,53,230	790	313,580	4 10 2
* 1,838·04	,, ,, 15th ,, ...	384,376	3,87,799	59,18,423	10,00,741	24,895	14,13,435	781	313,802	4 8 1
* 1,838·04	,, ,, 22nd ,, ...	420,832	4,02,919	57,93,285	10,30,612	26,991	14,60,522	795	315,818	4 10 0
* 1,838·04	,, ,, 1st March ...	409,196	4,02,809	57,06,772	10,86,121	23,875	15,12,805	823	320,940	4 11 5
* 1,838·04	,, ,, 8th ,, ...	442,705	4,35,751	56,86,936	10,35,053	23,477	14,94,281	813	318,375	4 11 2
* 1,838·04	,, ,, 15th ,, ...	420,558	4,15,553	53,91,908	9,50,907	25,180	13,91,640	757	308,662	4 8 2
* 1,838·04	,, ,, 22nd ,, ...	385,421	4,14,365	55,25,831	10,10,404	27,657	14,50,416	789	316,887	4 9 3
* 1,838·04	,, ,, 29th ,, ...	352,747	3,70,815	47,04,663	8,22,537	22,583	12,15,935	662	304,485	3 15 11
* 1,838·04	,, ,, 5th April ...	376,404	3,83,349	54,53,123	9,60,539	24,132	13,68,020	744	306,385	4 7 5
* 1,838·04	,, ,, 12th ,, ...	388,983	3,46,170	59,47,885	11,13,803	22,505	14,84,538	808	323,691	4 9 5
* 1,838·04	,, ,, 19th ,, ...	395,171	3,59,067	62,68,999	11,22,041	27,143	15,09,151	821	324,749	4 10 4
* 1,838·04	,, ,, 26th ,, ...	420,878	3,75,797	62,30,565	11,16,880	26,919	15,19,596	827	322,190	4 11 6
* 1,838·90	,, ,, 3rd May ...	419,769	3,84,358	64,19,420	11,57,199	25,206	15,66,662	830	328,806	4 12 3
* 1,906·37	,, ,, 10th ,, ...	471,948	3,82,051	66,19,006	11,33,638	26,151	15,41,840	809	333,729	4 9 11
* 1,906·37	,, ,, 17th ,, ...	445,015	3,66,445	61,51,671	11,33,090	30,989	15,31,133	804	331,173	4 10 0
* 1,905·37	,, ,, 24th ,, ...	435,333	3,54,444	62,34,787	10,88,732	24,972	14,68,148	771	321,976	4 8 5
1,905·37	,, ,, 31st ,, ...	406,879	3,67,964	56,09,682	10,43,750	26,587	14,28,300	750	316,936	4 8 4
1,905·37	,, ,, 7th June ...	410,167	4,02,376	56,58,824	10,46,612	25,639	14,74,657	774	314,410	4 11 1
1,905·37	,, ,, 14th ,, ...	430,448	3,96,423	56,58,135	9,61,605	26,083	13,84,170	728	317,875	4 6 8
1,905·37	,, ,, 21st ,, ...	409,641	4,00,761	52,35,390	8,78,568	25,861	13,05,190	685	307,113	4 4 0
1,905·37	Last 9 days of ,, ...	538,371	5,08,310	62,24,493	10,66,724	36,321	16,11,355	846	382,145	4 3 6
	Suppl. for 31st March ...	541	2,965	84,435	38,893	3,133	44,990	24	.....	.....
	,, ,, 30th June ...	8,775	48,479	2,70,000	—11,82,000	—1,25,945	—12,59,466	—661	.....	.....
	Totals up to date ...	10,436,359	99,41,601	14,81,98,837	2,53,04,606	5,33,777	3,57,79,984	744	8,142,031	4 6 4

* Audited figures.

Abstract of progressive weekly returns of all earnings for 1903 in comparison with 1901—concluded. *1901.*

		No. of passengers.	Rs.	Mds.	Rs.	Rs.	Rs.	Rs.	No.	Rate. Rs. A. P.
1,840·32	12 days of Jan. ..	547,806	5,51,449	81,89,364	14,01,437	31,128	19,84,034	1,078	504,735	5 14 11
1,837·46	Week ended 19th ,, ...	386,906	4,06,976	53,61,885	8,93,150	19,362	13,19,488	718	293,648	4 7 11
1,837·46	,, ,, 26th ,, ...	401,800	4,35,561	55,25,983	8,73,194	19,648	13,28,401	723	300,096	4 6 10
1,837·46	,, ,, 2nd Feb. ...	427,911	4,37,311	56,02,489	9,03,969	21,404	13,62,684	742	298,708	4 9 0
1,837·46	,, ,, 9th ,, ...	440,078	4,42,255	57,28,923	9,79,358	23,736	14,45,351	787	304,055	4 12 1
1,837·46	,, ,, 16th ,, ...	426,574	4,58,190	56,70,086	9,83,444	23,809	14,65,442	798	302,788	4 13 5
1,837·46	,, ,, 23rd ,, ...	405,839	4,61,259	52,85,599	9,04,690	21,314	14,07,273	766	292,792	4 12 11
1,837·46	,, ,, 2nd March ...	434,219	4,39,873	58,09,541	9,88,607	21,337	14,49,807	789	300,404	4 13 3
1,837·46	,, ,, 9th ,, ...	401,951	4,22,852	53,80,201	9,40,463	21,069	13,84,414	753	303,553	4 9 0
1,837·46	,, ,, 16th ,, ...	404,134	4,13,694	56,00,705	9,52,079	22,210	13,87,983	755	305,741	4 8 8
1,837·46	,, ,, 23rd ,, ...	362,038	3,75,362	55,06,456	9,33,312	23,037	13,81,711	752	298,025	4 10 2
1,837·46	,, ,, 30th ,, ...	376,859	3,69,722	63,78,830	10,44,486	22,325	14,36,533	782	305,729	4 11 2
1,837·46	,, ,, 6th April ..	326,230	3,45,970	55,56,196	10,20,611	20,194	13,86,775	755	315,099	4 5 9
1,837·46	,, ,, 13th ,, ...	348,885	3,13,192	57,27,837	11,07,079	18,687	14,38,958	785	322,300	4 7 5
1,837·46	,, ,, 20th ,, ...	362,372	3,53,075	60,11,922	11,25,806	23,408	15,02,289	818	325,796	4 9 9
1,837·46	,, ,, 27th ,, ...	352,809	3,45,807	53,64,780	10,79,165	20,799	14,45,771	787	320,508	4 8 3
1,837·46	,, ,, 4th May ...	368,384	3,49,575	55,00,009	11,04,448	20,825	14,74,848	803	323,420	4 9 0
1,837·46	,, ,, 11th ,,	385,203	3,32,611	53,88,315	10,75,138	22,616	14,30,365	778	323,430	4 6 9
1,837·46	,, ,, 18th ,, ...	395,095	3,37,288	61,50,305	11,83,074	21,369	15,41,631	839	325,074	4 11 11
1,837·46	,, ,, 25th ,, ...	390,082	3,44,066	52,14,899	10,75,598	22,474	14,42,758	785	338,343	4 6 3
1,837·46	,, ,, 1st June ...	428,804	3,81,038	52,70,259	10,40,459	21,391	14,51,878	790	335,547	4 7 4
1,837·46	,, ,, 8th ,, ...	490,795	4,15,046	50,57,549	10,78,022	23,027	15,11,695	823	318,024	4 11 11
1,837·46	,, ,, 15th ,, ...	473,753	3,98,807	56,04,264	10,18 310	19,920	14,37,160	782	308,130	4 10 7
1,837·46	,, ,, 22nd ,, ...	436,256	3,96,625	54,90,686	10,50,436	18,693	14,65,753	798	309,199	4 12 1
1,837·46	Last 8 days of ,, ...	490,231	4,53,545	64,06,777	11,80,549	26,463	16,60,557	904	359,008	4 10 0
	Suppl. for 31st March ...	839	4,873	1,05,355	89,326	48,075	1,42,272	77	.....	.....
	,, ,, 30th June ...	—1,560	17,607	9,38,116	—8,67,623	—13,422	—8,93,438	—468	.....	.....
	Totals up to date ...	10,299,222	1,00,24,349	14,44,48,241	2,52,12,646	5,55,404	3,57,92,398	740	8,021,780	4 7 5

TARKESSUR BRANCH RAILWAY.

Approximate Return of Traffic for the last 9 days of June 1902 on 22·23 miles open.

	Coaching Traffic.		Merchandise and Mineral Traffic.		Other earnings (estimated).	Total earnings.	Traffic Train-miles run.		
	No. of passengers.	Coaching receipts.	Weight carried.	Receipts.			Coaching.	Merchandise.	Total.
		Rs. A. P.	Mds. S.	Rs. A. P.	Rs. A. P.	Rs. A. P.			
Total traffic for the period ..	27,262	7,249 4 0	19,217 30	503 13 0	12 0 0	8,004 1 0	1,373	153	1,526
Or per mile of railway	.....	326 1 7	.....	30 1 10	0 8 8	362 12 1	.....	.....	.....
For previous 24½ weeks of half-year.	609,448*	1,54,011 8 0*	4,00,130 20†	18,878 6 0†	393 0 0‡	1,73,284 14 0	26,455§	3,245§	29,700
Total for 25½ weeks ...	636,710	1,61,260 12 0	5,09,347 10	19,681 3 0	407 0 0	1,81,348 15 0	27,828	3,398	31,226
COMPARISON.									
Total for corresponding 8 days of previous year.	23,940	6,061 8 7	15,617 20	659 8 0	9 14 0	6,730 14 7	1,195	125	1,320
Per mile of railway corresponding period of previous year.	.....	272 10 10	.....	29 10 8	0 7 1	302 12 7	.....	.....	.....
Total for corresponding 26 weeks of previous year.	654,831	1,65,658 5 11	4,79,323 10	19,608 8 0	536 7 3	1,85,893 5 2	27,818	3,202	31,020

* Added No. of passengers 479 and Rs. 180 on account of difference between the approximate and audited figures for the week ended 24th May 1902.
† { Do. Mds. 28,895 and „ 431 „ of ditto ditto ditto ditto.
{ Do. „ 6 „ of supplemental figures for 31st March 1902.
‡ { Do. „ 183 „ of rent of dwelling-houses, &c., not included in previous returns.
{ Deducted „ 3 „ of difference between the approximate and audited figures for the week ended 24th May 1902.
§ Audited figures up to 24th May 1902.

1902. *Abstract of progressive weekly returns of all earnings for 1902 in comparison with 1901.*

Open mileage.	Period.	Coaching Traffic.		Merchandise and Mineral Traffic.		Other earnings.	Total.	Per mile of railway.	Train mileage.	
		No. of passengers.	Rs.	Mds.	Rs.	Rs.	Rs.	Rs.	No.	Rate. Rs. A. P.
* 22·23	11 days of Jan. ..	31,035	7,209	33,335	1,254	16	8,479	381	1,914	4 6 11
* 22·23	Week ended 18th „ ...	21,540	4,939	13,778	544	9	5,492	247	1,188	4 10 0
* 22·23	„ „ 25th „ ...	22,871	5,508	22,360	839	7	6,352	286	1,188	5 5 7
* 22·23	„ „ 1st Feb. ..	20,860	4,873	20,234	777	3	5,653	254	1,188	4 12 2
* 22·23	„ „ 8th „ ...	20,347	4,911	21,300	808	12	5,731	258	1,188	4 13 2
* 22·23	„ „ 15th „ ...	20,433	4,869	19,785	807	5	5,681	256	1,188	4 12 6
* 22·23	„ „ 22nd „ ...	27,757	6,789	25,419	874	10	7,673	345	1,188	6 7 4
* 22·23	„ „ 1st March	26,217	5,989	25,912	911	9	6,909	311	1,188	5 13 1
* 22·23	„ „ 8th „ ...	25,938	9,731	25,488	938	6	10,675	480	1,333	8 10 8
* 22·23	„ „ 15th „ ...	28,282	6,847	20,727	887	14	7,748	349	1,298	5 15 6
* 22·23	„ „ 22nd „ ...	24,519	6,119	21,144	909	7	7,035	316	1,188	5 14 9
* 22·23	„ „ 29th „ ...	23,183	5,775	20,503	784	7	6,566	295	1,188	5 8 5
* 22·23	„ „ 5th April	26,153	6,032	25,290	765	9	7,306	333	1,188	6 3 7
* 22·23	„ „ 12th „ ...	31,346	11,171	18,948	809	12	11,992	539	1,320	9 1 4
* 22·23	„ „ 19th „ ...	30,141	11,858	14,017	826	10	12,694	571	1,364	9 4 11
* 22·23	„ „ 26th „ ...	21,449	5,845	17,723	814	10	6,709	302	1,188	5 10 4
* 22·23	„ „ 3rd May ...	27,813	5,403	19,816	724	8	6,135	276	1,188	5 2 8
* 22·23	„ „ 10th „ ...	25,311	6,392	14,056	630	8	6,930	312	1,188	5 13 4
* 22·23	„ „ 17th „ ...	23,748	5,349	14,883	595	8	5,952	265	1,188	4 15 3
* 22·23	„ „ 24th „ ...	22,357	5,502	38,080	1,151	6	6,729	303	1,188	5 10 7
22·23	„ „ 31st „ ...	20,494	5,023	18,101	719	9	5,751	259	1,188	4 13 5
22·23	„ „ 7th June ..	20,850	5,459	16,577	613	9	6,081	274	1,188	5 1 11
22·23	„ „ 14th „ ..	22,731	5,450	14,524	569	9	6,028	271	1,188	5 1 2
22·23	„ „ 21st „ ...	24,390	6,350	11,160	416	9	6,775	305	1,188	5 11 3
22·23	Last 9 days of „ ...	27,262	7,250	19,217	802	12	8,064	363	1,526	5 4 7
	Suppl. for 31st March .	... ..	.....	.. ...	6	.....	6	.....	.....	.....
	„ „ 30th June ...	... .	.....	.....	.....	183	183	 8	.....	.....
	Totals up to date ...	636,710	1,61,261	5,09,347	19,681	407	1,81,349	315	31,226	5 12 11

* Audited figures.

Abstract of progressive weekly returns of all earnings for 1902 in comparison with 1901—concluded. *1901.*

		No. of passengers.	Rs.	Mds.	Rs.	Rs.	Rs.	Rs.	No.	Rate. Rs. A. P.
22·23	12 days of Jan. ..	33,281	7,800	24,776	1,111	5	8,916	401	2,068	4 5 6
22·23	Week ended 19th „ ...	20,171	4,583	14,418	533	11	5,127	231	1,188	4 6 ..
22·23	„ „ 26th „ ...	22,762	5,482	19,230	763	5	6,250	281	1,188	5 4 2
22·23	„ „ 2nd Feb. ...	25,458	6,400	15,999	625	4	7,032	316	1,188	5 14 9
22·23	„ „ 9th „ ...	27,779	6,877	23,441	943	6	7,826	352	1,188	6 9 5
22·23	„ „ 16th „ ...	24,473	5,845	23,377	939	6	6,790	305	1,188	5 11 5
22·23	„ „ 23rd „ ...	37,141	9,043	21,136	848	10	10,709	486	1,188	9 1 5
22·23	„ „ 2nd Mar. ...	23,255	5,546	21,935	898	8	6,552	295	1,188	5 8 3
22·23	„ „ 9th „ ...	30,990	6,690	21,897	922	8	7,620	343	1,188	6 6 ..
22·23	„ „ 16th „ ...	22,698	5,739	21,930	964	11	6,714	302	1,188	5 10 5
22·23	„ „ 23rd „ ...	24,608	6,114	20,433	786	3	6,903	311	1,188	5 13 0
22·23	„ „ 30th „ ...	22,046	5,556	20,349	1,223	9	6,788	305	1,188	5 11 5
22·23	„ „ 6th April ...	29,185	7,704	20,338	749	9	8,462	381	1,144	7 6 4
22·23	„ „ 13th „ ...	42,011	12,411	20,084	722	4	13,137	591	1,298	10 1 11
22·23	„ „ 20th „ ...	33,421	9,397	16,037	987	8	10,292	463	1,386	7 6 10
22·23	„ „ 27th „ ...	23,870	5,640	19,058	725	15	6,380	287	1,188	5 5 11
22·23	„ „ 4th May ...	25,603	6,619	18,121	672	7	7,298	328	1,188	6 2 8
22·23	„ „ 11th „ ...	25,340	6,092	18,979	793	6	6,891	310	1,188	5 12 10
22·23	„ „ 18th „ ...	22,838	5,404	15,496	622	12	6,038	274	1,188	5 2 2
22·23	„ „ 25th „ ...	21,123	5,000	18,826	760	15	5,835	262	1,188	4 14 7
22·23	„ „ 1st June ...	27,244	6,817	16,324	703	3	7,523	338	1,188	6 5 4
22·23	„ „ 8th „ ...	26,703	6,143	13,903	573	8	6,724	302	1,232	5 7 4
22·23	„ „ 15th „ ...	21,662	4,861	14,469	641	10	5,512	248	1,188	4 10 3
22·23	„ „ 22nd „ ...	21 123	4,893	19,284	819	6	5,718	248	1,188	4 10 4
22·23	Last 8 days of „ ...	23,949	6,003	15,617	660	9	6,731	303	1,320	5 1 7
	Suppl. for 31st March ...	.....	.....	.....	.....	90	99	4	.....	.. ..
	„ „ 30th June ...	620	1,920	36	—83	239	2,076	93	.....	.....
	Totals up to date ...	654,831	1,65,658	4,79,323	19,690	536	1,85,893	322	31,020	5 15 11

DELHI-UMBALLA-KALKA RAILWAY.

Approximate Return of Traffic for the last 9 days of June 1902 on 162·24 miles open.

	Coaching Traffic.		Merchandise and Mineral Traffic.		Other earnings (estimated).	Total earnings.	Traffic Train-miles run.		
	No. of passengers.	Coaching receipts.	Weight carried.	Receipts.			Coaching.	Merchandise.	Total.
		Rs. A. P.	Mds. S.	Rs. A. P.	Rs. A. P.	Rs. A. P.			
Total traffic for the period ...	27,455	22,450 4 0	1,13,014 30	13,813 13 0	72 0 0	36,331 1 0	11,346	5,714	17,060
Or per mile of railway ...	.....	138 6 0	.....	86 2 4	0 7 1	223 15 5	.....	.....	.....
For previous 24½ weeks of half-year	544,972*	4,81,740 12 0*	27,12,543 30†	3,04,017 8 0†	6,295 0 0‡	7,92,053 4 0	208,638§	113,048§	321,686
Total for 25½ weeks ...	572,427	5,04,191 0 0	28,25,558 20	3,17,831 5 0	6,367 0 0	8,28,389 5 0	219,984	118,762	338,746
COMPARISON.									
Total for corresponding 8 days of previous year.	27,739½	21,411 2 2	2,07,383 20	21,851 6 3	63 4 3	43,325 12 8	9,373½	4,125½	13,499
Per mile of railway corresponding period of previous year.	.....	131 15 7	.....	134 10 11	0 6 3●	267 0 9	.....	.....	.....
Total for corresponding 26 weeks of previous year.	511,272½	4,59,597 9 2	29,19,994 0	3,69,872 10 9	6,475 1 0	8,35,945 4 11	218,400½	99,494½	317,895

* { Added No. of passengers 1,481 and Rs. 763 on account of difference between the approximate and audited figures for the week ended 24th May 1902.
,, ,, 305 and ,, 474 ,, of supplemental figures for 31st March 1902.
,, ,, 8,055 and ,, 17,382 ,, of special and extra troop trains, &c., not included in previous returns.
Deducted maunds 13,604 and added ,, 2,536 ,, of difference between the approximate and audited figures for the week ended 24th May 1902.

† { Added ,, 1,532 and ,, 131 ,, of supplemental figures for 31st March 1902.
Deducted ,, 580,000 and ,, 13 800 ,, of estimated amount of revenue coal and stores for the half-year.

‡ { Added ,, 6 ,, of difference between the approximate and audited figures for the week ended 24th May 1902
,, ,, 4,719 ,, of rent of dwelling-houses, &c., not included in previous returns.

§ Audited figures up to 24th May 1902.

1902. *Abstract of progressive weekly returns of all earnings for 1902 in comparison with 1901.*

Open mileage.	Period.	Coaching Traffic.		Merchandise and Mineral Traffic.		Other earnings.	Total.	Per mile of railway.	Train mileage.	
		No. of passengers.	Rs.	Mds.	Rs.	Rs.	Rs.	Rs.	No.	Rate. Rs. A. P.
* 162·24	11 days of Jan. ...	25,067	20,571	1,55,491	18,783	66	39,420	243	18,247	2 2 7
* 162·24	Week ended 18th ,, ...	16,445	11,600	1,01,583	10,995	65	22,650	140	12,074	1 14 0
* 162·24	,, ,, 25th ,, ...	18,825	13,055	2,77,622	16,113	48	30,116	186	12,590	2 6 3
* 162·24	,, ,, 1st Feb. ...	19,323	16,036	1,13,114	11,007	70	27,763	171	12,313	2 4 1
* 162·24	,, ,, 8th ,, ...	18,762	16,526	87,305	10,927	69	27,522	170	12,203	2 4 1
* 162·24	,, ,, 15th ,, ...	19,477	15,881	2,82,758	15,004	61	30,926	191	12,612	2 7 8
* 162·24	,, ,, 22nd ,, ...	23,207	17,153	1,93,081	16,088	92	33,333	205	11,997	2 12 5
* 162·24	,, ,, 1st March ...	22,775	18,083	1,71,585	14,391	77	33,151	204	11,751	2 13 2
* 162·24	,, ,, 8th ,, ...	28,825	19,525	94,865	11,710	95	31,330	193	12,504	2 8 1
* 162·24	,, ,, 15th ,, ...	22,945	23,093	1,35,608	11,414	83	34,589	213	13,132	2 10 2
* 162·24	,, ,, 22nd ,, ...	21,916	21,852	1,25,823	15,379	66	37,297	230	14,668	2 8 8
* 162·24	,, ,, 29th ,, ...	22,083	24,283	1,44,747	16,558	45	40,886	252	15,127	2 11 3
* 162·24	,, ,, 5th April ...	25,317	25,509	2,30,615	12,978	90	38,577	238	14,142	2 11 8
* 162·24	,, ,, 12th ,, ...	21,024	21,051	1,10,624	12,766	83	33,900	209	13,686	2 7 8
* 162·24	,, ,, 19th ,, ...	20,155	19,142	1,13,127	11,866	51	31,059	191	13,006	2 4 6
* 162·24	,, ,, 26th ,, ...	24,072	22,822	1,16,616	13,960	44	36,826	227	14,417	2 8 10
* 162·24	,, ,, 3rd May ...	22,247	21,093	1,19,640	9,385	61	30,539	188	14,034	2 2 10
* 162·24	,, ,, 10th ,, ...	23,153	19,317	89,960	12,425	59	31,801	196	14,490	2 3 1
* 162·24	,, ,, 17th ,, ...	24,040	20,057	92,624	12,352	51	32,460	200	13,502	2 6 8
* 162·24	,, ,, 24th ,, ...	24,870	19,543	1,15,742	16,003	70	35,616	220	15,932	2 8 11
162·24	,, ,, 31st ,, ...	25,367	17,360	1,21,333	10,984	68	28,407	175	12,691	2 3 10
162·24	,, ,, 7th June ...	23,873	19,544	1,03,726	12,434	56	32,034	197	12,217	2 9 10
162·24	,, ,, 14th ,, ...	24,084	20,058	85,541	10,410	56	30,524	188	12,805	2 6 2
162·24	,, ,, 21st ,, ...	23,040	18,511	1,15,492	13,854	36	32,421	200	12,726	2 8 9
162·24	Last 9 days of ,, ...	27,455	22,450	1,13,015	13,814	72	36,336	224	17,060	2 3 1
	Suppl. for 31st March ,,	305	474	1,582	131	....	605	4	.....	.....
	Suppl. for 30th June ...	8,055	17,382	—5,80,000	—13,900	4,719	8,301	51	.....	.....
	Totals up to date ...	572,427	5,04,191	28,25,559	3,17,831	6,367	8,28,389	197	338,746	2 7 2

* Audited figures.

Abstract of progressive weekly returns of all earnings for 1902 in comparison with 1901—concluded. 1901.

		No. of passengers.	Rs.	Mds.	Rs.	Rs.	Rs.	Rs.	No.	Rate. Rs. A. P.
162·24	12 days of Jan. ...	26,766	22,477	1,25,266	16,296	65	38,838	239	20,837	1 13 10
162·24	Week ended 19th ,, ...	15,707	13,931	1,78,597	11,804	41	25,836	159	12,933	2 0 0
162·24	,, ,, 26th ,, ...	16,332	13,878	1,40,538	11,569	82	25,529	157	12,142	2 1 8
162·24	,, ,, 2nd Feb. ...	18,221	14,088	1,57,744	11,308	71	25,532	157	12,233	2 1 4
162·24	,, ,, 9th ,, ...	18,764	15,095	83,151	10,131	71	25,297	156	12,187	2 1 3
162·24	,, ,, 16th ,, ...	19,741	17,279	1,48,693	10,573	73	27,925	172	11,700	2 6 3
162·24	,, ,, 23rd ,, ...	19,823	18,299	1,26,848	10,975	75	29,349	181	12,295	2 6 3
162·24	,, ,, 2nd March ...	19,304	16,234	1,44,528	13,161	93	29,484	183	11,953	2 7 6
162·24	,, ,, 9th ,, ...	18,397	16,404	1,05,167	11,901	62	28,367	175	12,102	2 5 6
162·24	,, ,, 16th ,, ...	23,701	22,244	1,00,333	13,540	104	35,888	221	11,790	3 0 8
162·24	,, ,, 23rd ,, ...	24,608	22,021	1,17,449	15,601	107	37,729	233	12,518	3 0 3
162·24	,, ,, 30th ,, ...	21,564	21,171	1,63,513	19,755	66	41,992	259	13,390	3 2 2
162·24	,, ,, 6th April ...	21,385	21,004	1,83,595	18,549	104	40,557	250	13,804	2 14 10
162·24	,, ,, 13th ,, ...	20,845	19,082	1,41,007	15,785	73	34,920	215	12,958	2 11 1
162·24	,, ,, 20th ,, ...	17,044	18,547	1,27,665	12,027	54	30,628	189	12,558	2 7 6
162·24	,, ,, 27th ,, ...	14,557	16,678	1,09,725	14,324	57	31,059	191	12,161	2 8 10
162·24	,, ,, 4th May ...	17,652	17,388	2,15,145	14,180	51	31,589	195	11,980	2 10 2
162·24	,, ,, 11th ,, ...	17,473	15,994	1,41,080	15,959	60	33,013	203	11,958	2 12 2
162·24	,, ,, 18th ,, ...	18,468	18,406	1,05,023	16,803	47	35,202	217	11,667	3 0 4
162·24	,, ,, 25th ,, ...	20,016	16,851	1,33,131	20,542	73	37,766	233	12,120	3 1 10
162·24	,, ,, 1st June ...	22,520	15,767	1,86,402	18,413	60	34,240	211	12,901	2 10 6
162·24	,, ,, 8th ,, ...	22,525	20,107	1,41,187	18,932	48	39,087	241	12,445	3 2 3
162·24	,, ,, 15th ,, ...	23,289	18,173	1,33,038	15,600	67	34,840	216	11,778	2 15 4
162·24	,, ,, 22nd ,, ...	22,774	17,156	1,69,303	19,807	56	37,059	228	11,941	3 1 8
162·24	Last 8 days of ,, ...	27,730	21,411	2,07,383	21,851	63	43,325	267	13,499	3 3 4
	Suppl. for 31st March ...	518	1,359	8,856	3,041	1,073	7,273	45	.....	.
	Suppl. for 30th June ...	954	6,712	—6,75,044	—13,940	2,799	—6,429	—40	.....	.....
	Totals up to date ...	511,273	4,59,597	29,19,994	3,69,873	6,475	8,35,945	198	317,895	2 10 1

SOUTH BEHAR RAILWAY.

Approximate Return of Traffic for the last 9 days of June 1902 on 78·76 miles open.

	Coaching Traffic.		Merchandise and Mineral Traffic.		Other earnings (estimated).	Total earnings.	Traffic Train-miles run.		
	No. of passengers.	Coaching receipts.	Weight carried.	Receipts.			Coaching.	Merchandise.	Total.
		Rs. A. P.	Mds. s.	Rs. A. P.	Rs. A. P.	Rs. A. P.			
Total traffic for the week ...	17,934	8,842 4 0	53,697 0	2,804 8 0	28 0 0	11,674 12 0	2,445	1,257	3,702
Or per mile of railway	.....	112 4 4	.....	35 9 9	0 5 8	148 3 9	.....	.....	.....
For previous 24½ weeks of half-year	342,863*	1,74,806 7 0*	9,42,296 10†	78,060 10 0†	441 0 0‡	2,53,317 1 0	48,450§	24,397§	72,847
Total for 25½ weeks ..	360,797	1,83,648 11 0	9,95,993 10	80,874 2 0	469 0 0	2,64,991 13 0	50,895	25,654	76,549
Comparison.									
Total for corresponding 8 days of previous year	14,058	6,057 4 6	47,786 30	3,033 13 0	16 10 9	9,613 12 3	2,373	1,407	3,780
Per mile of railway corresponding period of previous year ...	.....	88 5 4	.....	33 8 3	0 3 5	122 1 0	.....	.....	.....
Total for corresponding 26 weeks of previous year ...	344,208	1,68,740 15 9	11,87,291 10	80,208 7 0	1,484 14 0	2,56,434 4 9	52,259	32,785§	85,044§

* Added number of passengers 72 and deducted Rs. 539 on account of difference between the approximate and audited figures for the week ended 24th May 1902.
" " " 14 and " 16 " of supplemental figures for 31st March 1902.
† Deducted maunds 3,236 and " 477 " of difference between the approximate and audited figures for the week ended 24th May 1902.
" " 258 and " 16 " of supplemental figures for 31st March 1902.
" " 2,31,000 and " 3,309 " of estimated amount of revenue coal and stores for the half-year.
‡ " " " 639 " of Telegraph earnings for the half-year creditable to the E. I. Ry proper.
" " " 2 " of difference between the approximate and audited figures for the week ended 24th May 1902.
Added " 404 " of rent of dwelling-houses, &c., not included in previous returns.
§ Audited figures up to 24th May 1902.

1902. *Abstract of progressive weekly returns of all earnings for 1902 in comparison with 1901.*

Open mileage.	Period.	Coaching Traffic.		Merchandise and Mineral Traffic.		Other earnings.	Total.	Per mile of railway.	Train mileage.	
		No. of passengers.	Rs.	Mds.	Rs.	Rs.	Rs.	Rs.	No.	Rate. Rs. A. P.
*78·76	11 days of Jan. ...	10,410	10,417	55,727	3,047	20	14,084	179	4,567	3 1 4
*78·76	Week ended 18th " ...	11,350	5,438	35,358	2,097	19	8,154	104	2,838	2 14 0
*78·76	" " 25th " ...	13,043	6,982	35,935	2,005	33	9,880	125	2,838	3 7 9
*78·76	" " 1st Feb. ...	12,345	6,248	33,970	2,178	9	8,435	107	3,150	2 10 10
*78·76	" " 8th " ..	13,181	6,716	32,169	2,220	14	8,950	114	3,071	2 14 8
*78·76	" " 15th " ...	12,218	6,804	30,694	2,133	16	8,953	114	2,835	3 2 6
*78·76	" " 22nd " ...	14,725	8,159	33,766	2,476	21	10,656	135	2,993	3 9 0
*78·76	" " 1st March ...	15,653	9,498	37,721	2,319	21	11,648	148	2,835	4 1 9
*78·76	" " 8th " ..	14,492	8,578	50,922	3,579	26	12,183	155	2,678	4 8 9
*78·76	" " 15th " ...	14,340	8,140	62,036	5,226	22	13,388	170	2,993	4 7 7
*78·76	" " 22nd " ...	16,128	9,619	55,914	4,328	17	13,964	177	2,993	4 10 8
*78·76	" " 29th " ..	13,451	8,179	52,316	4,037	26	12,242	155	3,071	3 15 9
*78·76	" " 5th April ...	15,590	8,283	71,005	5,026	32	13,341	169	2,993	4 7 4
*78·76	" " 12th " ...	15,155	7,531	62,610	4,620	23	12,174	155	2,835	4 4 8
*78·76	" " 19th " ...	15,786	7,075	46,931	3,838	15	10,928	139	2,914	3 12 0
*78·76	" " 26th " ...	12,271	5,737	85,993	4,012	22	9,771	124	3,071	3 2 11
*78·76	" " 3rd May ..	12,705	5,760	55,752	4,105	21	9,894	126	3,150	3 2 3
*78·76	" " 10th " ...	14,402	6,356	48,096	3,623	18	9,997	127	2,993	3 5 5
*78·76	" " 17th " ...	14,037	6,084	50,037	3,448	22	9,554	121	2,993	3 3 1
*78·76	" " 24th " ...	14,749	6,264	44,353	2,915	22	9,201	117	3,071	2 15 11
78·76	" " 31st " ...	13,794	6,119	57,611	3,610	21	9,752	124	2,993	3 4 2
78·76	" " 7th June ...	13,775	6,983	48,940	3,134	22	10,145	129	2,835	3 9 5
78·76	" " 14th " ..	13,614	6,555	51,886	2,929	22	9,506	121	3,072	3 1 6
78·76	" " 21st " ..	16,576	7,340	82,882	2,523	22	9,894	126	3,071	3 3 7
78·76	Last 9 days of " ...	17,934	8,843	53,697	2,804	28	11,675	148	3,702	2 2 6
	Suppl. for 31st March ...	14	16	—258	—16	.....	... ..	.....	...	... ...
	Suppl. for 30th June ..	... ..	.....	—2,31,000	—3,300	—75	—3,375	—43	...	.....
	Totals up to date ...	360,797	1,83,649	9,95,993	80,874	469	2,64,992	130	76,549	3 7 5

* Audited figures.

Abstract of progressive weekly returns of all earnings for 1902 in comparison with 1901—concluded. *1901.*

		No. of passengers.	Rs.	Mds.	Rs.	Rs.	Rs.	Rs.	No.	Rate. Rs. A. P.
78·76	12 days of Jan. ...	18,020	8,256	69,742	4,259	47	12,562	160	5,586	2 4 0
78·76	Week ended 19th " ...	11,073	5,045	49,632	3,026	20	8,091	103	3,228	2 8 1
78·76	" " 26th " ...	12,676	6,095	46,172	2,862	41	8,998	144	3,150	2 13 8
78·76	" " 2nd Feb. ...	14,872	7,292	48,810	2,789	23	10,104	128	3,229	3 2 1
78·76	" " 9th " ...	14,755	8,170	45,080	2,641	63	10,874	138	3,308	3 4 7
78·76	" " 16th " ...	15,629	8,451	51,727	3,070	59	11,580	155	3,228	3 13 4
78·76	" " 23rd " ...	15,705	8,225	63,545	4,130	36	12,381	157	3,386	3 10 6
78·76	" " 2nd March ...	16,528	7,947	54,793	3,240	46	11,233	143	2,835	3 15 5
78·76	" " 9th " ...	14,490	7,522	40,820	2,669	46	10,237	130	3,308	3 1 6
78·76	" " 16th " ...	15,781	8,770	48,067	3,702	50	12,522	159	3,229	3 14 1
78·76	" " 23rd " ...	13,829	6,173	65,992	4,692	51	12,836	163	3,465	3 11 3
78·76	" " 30th " ...	12,722	6,459	59,729	4,634	31	11,124	141	3,307	3 5 10
78·76	" " 6th April ...	11,701	5,804	52,237	3,541	41	9,386	119	3,308	2 13 5
78·76	" " 13th " ...	13,588	6,177	47,302	2,953	33	9,163	116	3,307	2 12 4
78·76	" " 20th " ...	11,989	5,363	43,964	3,181	39	8,583	109	3,308	2 9 6
78·76	" " 27th " ...	11,128	5,224	50,796	3,597	28	8,840	112	3,307	2 10 10
78·76	" " 4th May ...	9,572	4,161	48,733	3,476	27	7,664	97	3,308	2 5 1
78·76	" " 11th " ...	12,575	6,240	56,908	4,304	17	10,570	134	3,317	3 3 1
78·76	" " 18th " ...	11,917	5,678	71,608	4,929	31	10,628	135	3,308	3 3 5
78·76	" " 25th " ...	13,442	6,274	67,254	4,558	23	10,855	138	3,544	3 1 0
78·76	" " 1st June ...	12,782	5,562	55,972	3,567	28	9,157	116	3,386	2 11 8
78·76	" " 8th " ...	15,172	6,947	52,815	3,519	23	10,489	133	3,307	3 2 9
78·76	" " 15th " ...	14,071	7,117	29,569	2,520	19	9,656	123	3,308	2 14 8
78·76	" " 22nd " ...	14,309	6,815	46,304	3,758	27	10,600	135	3,307	3 3 3
78·76	Last 8 days of " ...	14,958	6,957	47,787	2,640	17	9,614	122	3,780	2 8 8
	Suppl. for 31st March ...	.....	.....	8,923	198	472	670	9	... ..	.....
	Suppl. for 30th June ...	9	8	—1,30,895	—2,747	157	—2,582	—33	... ..	... ..
	Totals up to date ...	344,208	1,68,741	11,87,291	86,208	1,485	2,56,434	125	85,044	3 0 0

EASTERN BENGAL STATE RAILWAY.

(INCLUDING N. B., K.-D., DACCA AND ASSAM-BEHAR SECTIONS.)

Approximate Return of Traffic and Mileage for first 12 days of July 1902 on 854 miles open.

	COACHING TRAFFIC.		MERCHANDISE AND MINERAL TRAFFIC.		Other earnings (including ferry).	Total earnings.	TRAFFIC TRAIN-MILES RUN.		
	Number of passengers.	Coaching receipts.	Weight carried.	Receipts.			Coaching.	Merchandise.	Total.
		Rs. A. P.	Mds. s.	Rs. A. P.	Rs. A. P.	Rs. A. P.			
Total traffic for 12 days	396,210	1,94,240 0 0	11,33,200 0	1,88,640 0 0	13 260 0 0	3,96,140 0 0	64,776	60,624	125,400
Or per mile of railway	232	114 0 0	663 0	110 0 0	2 0 0*	220 0 0*	..	...	...
Total for 2 weeks .	396,210	1,94,240 0 0	11,33,200 0	1,88,640 0 0	13,260 0 0	3,96,140 0 0	64,776	60,624	125,400
COMPARISON.									
Total for corresponding 13 days of previous year	451,384	1,89,734 0 0	12,78,196 0	1,87,181 0 0	14,553 0 0	3,91,468 0 0	67,706	60,485	128,191
Per mile of railway corresponding week of previous year ..	264	111 0 0	748 0	110 0 0	8 0 0	223 0 0	...	...	...
Total to corresponding date of previous year	451,384	1,89,734 0 0	12,78,196 0	1,87,181 0 0	14,553 0 0	3,91,468 0 0	67,706	60,485	128,191

* Excluding ferry earnings.

BRAHMAPUTRA-SULTANPUR RAILWAY.

Approximate Return of Traffic and Mileage for the first 12 days of July 1902 on 59·19 miles open.

	COACHING TRAFFIC.		MERCHANDISE AND MINERAL TRAFFIC.		Other earnings (including ferry).	Total earnings.	TRAFFIC TRAIN-MILES RUN.		
	No. of passengers.	Coaching receipts.	Weight carried.	Receipts.			Coaching.	Merchandise.	Total.
		Rs. A. P.	Mds. s.	Rs. A. P.	Rs. A. P.	Rs. A. P.			
Total traffic for 12 days	11,940	3,590 0 0	16,900 0	1,740 0 0	90 0 0	5,420 0 0	1,932	948	2,880
Or per mile of railway	101	30 0 6	143 0	15 0 0	1 0 0	46 0 0	...	...	...
Total for 2 weeks ...	11,940	3,590 0 0	16,900 0	1,740 0 0	90 0 0	5,420 0 0	1,932	948	2,880
COMPARISON.									
Total for corresponding 13 days of previous year	11,134	3,116 0 6	22,205 0	1,931 0 0	45 0 0	5,092 0 6	1,995	2,425	4,420
Per mile of railway corresponding week of previous year	94	27 0 0	188 0	16 0 0	...	43 0 0	...	...	...
Total to corresponding date of previous year	11,134	3,116 0 0	22,205 0	1,931 0 0	45 0 0	5,092 0 0	1,995	2,425	4,420

MYMENSINGH-JAGANNATHGANJ RAILWAY.

Approximate Return of Traffic and Mileage for first 12 days of July 1902 on 53·37 miles open.

	COACHING TRAFFIC.		MERCHANDISE AND MINERAL TRAFFIC.		Other earnings (including ferry).	Total earnings.	TRAFFIC TRAIN-MILES RUN.		
	Number of passengers.	Coaching receipts.	Weight carried.	Receipts.			Coaching.	Merchandise.	Total.
		Rs. A. P.	Mds. s	Rs. A. P.	Rs. A. P.	Rs. A. P.			
Total traffic for 12 days	13,300	3,720 0 0	9,860 0	650 0 0	30 0 0	4,400 0 0	1,992	1,488	3,480
Or per mile of railway ...	125	35 0 0	92 0	6 0 0	.....	41 0 0	...	...	...
Total for 2 weeks ...	13,300	3,720 0 0	9,860 0	650 0 0	30 0 0	4,400 0 0	1,992	1,488	3,480
COMPARISON.									
Total for corresponding 13 days of previous year . .	13,286	3,723 0 0	5,528 0	384 0 0	23 0 0	4,130 0 0	2,244	1,862	4,106
Per mile of railway corresponding week of previous year ..	124	35 0 0	52 0	4 0 0	...	39 0 0	...	...	...
Total to corresponding date of previous year	13,286	3,723 0 0	5,528 0	384 0 0	23 0 0	4,130 0 0	2,244	1,862	4,106

DACCA STATE RAILWAY.

Approximate Return of Traffic and Mileage for first 12 days of July 1902 on 86 miles open.

	Coaching Traffic.		Merchandise and Mineral Traffic.		Other earnings.	Total earnings.	Traffic Train-miles run.		
	Number of passengers.	Coaching receipts.	Weight carried.	Receipts.			Coaching.	Merchandise.	Total.
		Rs. A. P.	Mds. s.	Rs. A. P.	Rs. A. P.	Rs A. P			
Total traffic for 12 days	53,350	13,710 0 0	22,000 0	2,330 0 0	340 0 0	16,380 0 0	5,500	2,880	8,380
Or per mile of railway	310	79 0 0	133 0	14 0 0	2 0 0	95 0 0	...	...	...
Total for 2 weeks ..	53,350	13,710 0 0	22,900 0	2,330 0 0	340 0 0	16,380 0 0	5,500	2,880	8,380
Comparison.									
Total for corresponding 13 days of previous year	46,097	13,377 0 0	20,500 0	2,967 0 0	230 0 0	16,574 0 0	5,544	3,407	8,951
Per mile of railway corresponding week of previous year ...	278	78 0 0	119 0	17 0 0	1 0 0	96 0 0	...	...	...
Total to corresponding date of previous year	46,097	13,377 0 0	20,500 0	2,967 0 0	230 0 0	16,574 0 0	5,544	3,407	8,951

COOCH BEHAR STATE RAILWAY.

Approximate Return of Traffic and Mileage for first 12 days of July 1902 on 33·78 miles open.

	Coaching Traffic.		Merchandise and Mineral Traffic.		Other earnings (including ferry).	Total earnings.	Traffic train-miles run.		
	Number of passengers.	Coaching receipts.	Weight carried.	Receipts.			Coaching.	Merchandise.	Total.
		Rs. A. P.	Mds. s.	Rs. A. P.	Rs. A. P.	Rs. A. P.			
Total traffic for 12 days	4,080	1,730 0 0	12,630 0	1,560 0 0	30 0 0	3,320 0 0	552	2,748*	3,300*
Or per mile of railway	70	26 0 0	187 0	23 0 0	.....	49 0 0	.....	.....	.....
Total for 2 weeks ...	4,080	1,730 0 0	12,630 0	1,560 0 0	30 0 0	3,320 0 0	552	2,748	3,300
Comparison.									
Total for corresponding 13 days of previous year	3,759	1,344 0 0	9,750 0	1,119 0 0	267 0 0	2,730 0 0	391	719	1,110
Per mile of railway corresponding week of previous year	56	20 0 0	144 0	16 0 0	1 0 0	37 0 0	.....	.....	.....
Total to corresponding date of previous year	4,750	1,344 0 0	9,750 0	1,119 0 0	267 0 0	2,730 0 0	391	719	1,110

* Including ballast train-miles 2,492.

BENGAL AND NORTH-WESTERN RAILWAY.

Approximate Return of Traffic for the first 12 days of July 1902 on 1,262 miles open.

	Coaching Traffic.		Merchandise and Mineral Traffic.		Other earnings (estimated), including steam-boat.	Total earnings.	Traffic Train-miles run.		
	No. of passengers.	Receipts.	Weight carried.	Receipts.			Coaching.	Merchandise.	Total
		Rs.	Mds.	Rs.	Rs.	Rs.			
Total traffic for the period on 1,262 miles open	347,330	(a)1,41,920	10,98,390	(b) 1,30,740	27,870	(b)3,00,530	70,267	(c)53,993	124,260
Or per mile of railway ...	275·22	112·46	870·36	103·60	22·08	238·14	.....	.....	.....
For previous Nil weeks of half-year	.....	.....	.....	.....	.....	.....	.....	.....	.....
Total for the period	347,330	1,41,920	10,98,390	1,30,740	27,870	3,00,530	70,267	53,993	124,260
Comparison.									
Total for corresponding period (13 days) of previous year on 1,251 miles open	346,061	1,34,880	12,01,577	1,30,740	33,171	3,18,619	61,370	(d)55,599	116,969
Per mile of corresponding period of previous year	276·63	107·81	960·49	120·36	26·52	254·69	.....	.....	.....
Total to corresponding date of previous year	346,061	1,34,880	12,01,577	1,50,568	33,171	3,18,619	61,370	55,599	116,969

(a) Increase due to increased mileage and improved traffic generally.
(b) Decrease due to the current Approximate Return being for 12 days only while the return for the corresponding period of previous year was for 13 days.
(c) Includes 7,350 miles of ballast trains run on open line.
(d) ,, 4,508 ,, ,, ,,

SEGOWLIE-RAKSAUL BRANCH RAILWAY.

(WORKED BY THE B. & N.-W. RAILWAY.)

Approximate Return of Traffic for first 12 days of July 1902 on 18 miles open.

	Coaching Traffic.		Merchandise and Mineral Traffic.		Other earnings (estimated).	Total earnings.	Traffic Train-miles run.		
	Passengers carried.	Receipts.	Weight carried.	Receipts.			Coaching.	Merchandise.	Total.
	No.	Rs.	Mds.	Rs.	Rs.	Rs.			
Total traffic for the period on 18 miles open	2,646	390	21,707	466	6	862	604	260	864
Or per mile of railway	147·00	21·67	1,209·28	25·89	0·33	47 89	.....	.....	.....
For previous Nil weeks of half-year	.....		.....		.....	.....	. .	.....	. .
Total for the period ...	2,646	390	21,707	466	6	862	604	260	864
Comparison.									
Total for corresponding period (13 days) of previous year on 18 miles open.	3,817	613	15,815	486	12	1,111	766	170	936
Per mile of corresponding period of previous year.	212·05	34·06	878·61	27·00	0 67	61·75	.....	.....	.....
Total to corresponding date of previous year.	3,817	613	15,815	486	12	1,111	766	170	936

SEGOWLIE-RAKSAUL BRANCH RAILWAY.

(WORKED BY THE B. & N.-W. RAILWAY.)

Audited Return of Traffic for the week ending 31st May 1902 on 18 miles open.

	Coaching Traffic.		Merchandise and Mineral Traffic.		Other earnings.	Total earnings.	Traffic Train-miles run.		
	Passengers carried.	Receipts.	Weight carried	Receipts.			Coaching.	Merchandise.	Total.
	No.	Rs. A. P.	Mds.	Rs. A. P.	Rs. A. P.	Rs. A. P.			
Total traffic for the week on 18 miles open	2,441	350 7 0	15,417	180 13 0	10 5 0	541 9 0	336	168*	504
Or per mile of railway	135·61	19 7 6	856·50	10 0 9	0 9 2	30 1 5	.....	... ..	.....
For previous 20½ weeks of half-year	54,078	9,292 0 0	2,47,244	6,625 15 7	815 10 0	16,733 0 7	7,750	2,654	10,404
Total for the 21½ weeks ...	56,519	9,642 7 0	2,62,661	6,806 12 7	825 15 0	17,275 2 7	8,086	2,822	10,908
Comparison.									
Total for corresponding week of previous year on 18 miles open	2,061	321 7 1	20,515	400 0 0	10 7 0	731 14 1	366	138	504
Per mile of corresponding week of previous year	114·67	17 13 9	1,139·72	22 3 7	0 9 3	40 10 7	.....	.....	.....
Total to corresponding date of previous year	44,448	7,419 10 8	2,86,029	8,206 13 5	744 14 0	16,371 6 1	7,921	2,564	10,485

ASSAM-BENGAL RAILWAY.

Approximate Return of Traffic for the last 9 days of June 1902 on 558 miles open for all descriptions of traffic and an additional 31 miles for goods and parcels traffic only.

	Coaching Traffic.		Merchandise and Mineral Traffic.		Other earnings	Total earnings.	Traffic Train-miles run.		
	No. of passengers.	Coaching receipts.	Weight carried.	Receipts.			Coaching.	Merchandise.	Total.
		Rs. A. P.	Mds. s.	Rs. A. P.	Rs. A. P.	Rs. A. P.			
Total traffic for the week ...	45,162	30,387 0 0	1,06,908 0	14,540 0 0	43,433 0 0	88,360 0 0*	8,899	7,036	15,935
Or per mile of railway	80·94	54·46	181·51	24·69	73·74	152·89	15·95	11·95	27·90
For previous 25 weeks of half-year	920,985	5,80,318 0 0	26,21,703 0	3,11,051 0 0	39,279 0 0	9,31,549 0 0	167,730	143,161	310,891
Total for 26 weeks ...	966,147	6,10,705 0 0	27,28,611 0	3,26,491 0 0	82,712 0 0	10,19,908 0 0	176,629	150,197	326,826
Comparison.									
Total for corresponding week of previous year	85,788	31,792 0 0	98,197 0	14,803 0 0	—90,818 0 0	19,776 0 0*	7,362	8,571	15,933
Per mile of railway corresponding week of previous year ...	64·14	56·07	169·89	25·61	—46·40	36·18	13·19	14·83	28·02
Total to corresponding date of previous year	952,948	6,36,826 0 0	30,45,149 0	4,06,612 0 0	45,638 0 0	10,89,076 0 0	134,347	181,755	316,102

* The difference is due to exclusion of ballast train earnings for the half-year in the figures for corresponding period.

FINANCIAL YEAR.

Approximate Statement of Gross Receipts of the Assam-Bengal Railway.

Receipts for the period ending 30th June 1902.			Receipts for the period ending 30th June 1901.			Total receipts from 1st April 1902 to 30th June 1902.			Total receipts from 1st April 1901 to 30th June 1901.			Total increase in 1902.	Total decrease in 1902.
Mean mileage worked.	Receipts.	Per mile worked.	Mean mileage worked.	Receipts.	Per mile worked.	Mean mileage worked.	Total receipts.	Per mile worked.	Mean mileage worked	Total receipts.	Per mile worked		
	Rs.	Rs.		Rs.	Rs.		Rs.			Rs.		Rs.	Rs.
589	88,360	152·89	578	19,776	36·18	589	4,87,288	...	578	5,20,798	...	.....	33,510

DARJEELING-HIMALAYAN RAILWAY COMPANY, LIMITED.

				Rs.	A.	P.	Rs.	A	P.
Approximate earnings for the first 12 days of July 1902	...	Coaching	...	17,796	0	0	32,872	0	0
		Goods	...	14,969	0	0			
		Other earnings	...	107	0	0			
Audited earnings for the corresponding period of 1901	...	Coaching	...	17,670	0	0	32,631	0	0
		Goods	...	14,866	0	0			
		Other earnings	...	95	0	0			
				Increase		...	241	0	0
Receipts per mile for the first 12 days of July 1902			...	...	...	...	644	8	9
Ditto for the corresponding period of 1901			...	...	...	...	639	13	2
				Increase		...	4	11	7
Receipts from 1st July to 12th July 1902			...	...	...	...	32,872	0	0
Ditto for the corresponding period of 1901			...	..	...	...	32,631	0	0
				Increase		...	241	0	0

Printed at the Printing Office, and published by the Book Depôt, of the Bengal Secretariat, Writers' Buildings, in the City of Calcutta, on 23rd July 1902.

REGISTERED No. C029.] No. 31 of 1902.

The Calcutta Gazette.

WEDNESDAY, JULY 30, 1902.

CONTENTS.

	Page
PART I.—Orders and Notifications by the Lieutenant-Governor of Bengal, the High Court, Government Treasury, &c.	1040—1075
PART IA.—Orders and Notifications by the Government of India	125
PART IB.—Orders by the Lieutenant-Governor of Bengal	147—148
PART II.—Advertisements	921—959
PART III.—Acts of the Bengal Council	*Nil*
PART IV.—Bills of the Bengal Council	*Nil*
PART IVA.—Proceedings of the Bengal Legislative Council	*Nil*
PRT V.—Acts of the Governor-General's Council assented to by the Governor-General	*Nil*
PART VI.—Bills introduced into the Council of the Governor-General for making Laws and Regulations or published under Rule 23	*Nil*
APPENDIX.—Marine Notifications	289—298
SUPPLEMENT No. 31:—	
Declaration of State Holidays	1081
Report under section 41 of Bengal Act I of 1893 on the Ware-houses in Calcutta for the year 1901-1902	1083
Resolution on the Annual Report on the Police Administration of the Town of Calcutta and its Suburbs for the year 1901	1093
Statistical Return of Crops, Traffic by land and Sea, Vital Statistics, Gauge readings, Circular and Eastern Canal, Results of Meteorological Observations, Railway Traffic Receipts, &c., &c. ...	1001—1119

PART I

Orders and Notifications by the Lieutenant-Governor of Bengal, the High Court, Government Treasury, &c.

ORDERS BY THE LIEUT.-GOVERNOR OF BENGAL.

TOUR OF HIS HONOUR THE LIEUTENANT-GOVERNOR OF BENGAL DURING JULY AND AUGUST 1902.

Miles (by rail).	Day of the— Week.	Month.	Place.	Time (Railway time).	Remarks.
	Wednesday	July 30th	Halt ...	...	Visit Pandua.
	Thursday	„ 31st			
	Friday	Aug. 1st			Visit Gaur.
	Saturday	„ 2nd	Malda ... dep.	5-30	Anchor at night off mouth of Bhagirathi river.
	Sunday	„ 3rd	Azimganj ... arr.	16-0	Private arrival.

Miles (by rail).	DAY OF THE— Week.	Month.	Place.	Time (Railway time).	REMARKS.
	Monday	Aug. 4th	.....	...	Drive to Berhampur and rejoin *Rhotas*.
	Tuesday	,, 5th	Halt.		
	Wednesday	,, 6th	Berhampur... dep.	5-30	Anchor off Krishnagar at night.
	Thursday	,, 7th	Halt.		
	Friday	,, 8th	Krishnagar dep.	5-30	
473			Calcutta ... arr.	...	Land at Takta Ghat some time during the afternoon. Arrival private.

NOTE.—The party accompanying His Honour will be—

Lady Woodburn	Throughout the tour.
Miss Woodburn	
The Hon'ble Mr. C. E. Buckland, C.I.E., Chief Secretary to Government.	
Major Strachey, Private Secretary ...	
Captain Bignell, Aide-de-Camp ...	
Mrs. Lord, Housekeeper	
An English maid	
Three clerks, Private Secretary's Office ...	
About 20 servants	
The Postmaster, Lieutenant-Governor's Camp Post Office.	
Mr. D. B. Horn, Secretary to Government, Public Works Department ...	From Godagiri to Berhampur.
The Hon'ble Mr. Bourdillon, C.S.I., Member of the Board of Revenue, and Mrs. Bourdillon	At Malda.
Captain Anderson, I.M.S., and a Hospital Assistant	From Goalundo to Calcutta

The usual salute will be fired on His Honour's arrival at Calcutta.

DARJEELING,
The 6th July 1902.

J. STRACHEY, MAJOR,
Private Secy. to the Lieut.-Govr. of Bengal.

No. 153T.

The 29th July, 1902.—The 9th August having been declared by Notification No. 3577, dated the 28th instant, to be a public holiday, the meeting of the Bengal Legislative Council which was announced for the first-mentioned date is postponed to Monday, the 11th August, 1902, at 11 A.M.

By order of the Lieutenant-Governor of Bengal,

F. G. WIGLEY,
Secretary to the Bengal Council
and Assistant Secretary to the Govt. of Bengal,
Legislative Department.

No. 3239A.

APPOINTMENTS AND TRANSFERS.

GENERAL.—*No. 3A.R.T.—The 24th July 1902.*—Babu Sasi Mohan Talukdar, Deputy Magistrate and Deputy Collector, on leave, is posted temporarily to the head-quarters station of the Backergunge district.
Backergunge.

No. 5A.R.T.—The 24th July 1902.—Babu Chandi Charan Chatterjee, Deputy Magistrate and Deputy Collector, Vishnupur, Bankura, is appointed to have charge of the Patuakhali subdivision of the Backergunge district.
Bankura. Backergunge.

No. 7A.R.T.—The 24th July 1902.—Babu Jnanendra Nath Choudhuri, Deputy Magistrate and Deputy Collector, Patuakhali, Backergunge, is appointed to have charge of the Vishnupur subdivision of the Bankura district.
Backergunge. Bankura.

No. 3111A.—The 25th July 1902.—Mr. T. W. Richardson, District and Sessions Judge, is appointed to act as Additional District and Sessions Judge, 24-Parganas and Hooghly, during the absence, on deputation, of the Hon'ble Mr. Justice B. G. Geidt, or until further orders.
24-Parganas and Hooghly.

Mr. Richardson is empowered to perform the functions of a Principal Civil Court of Original Jurisdiction, under section 3, clause (*d*), of Act I of 1894, within the limits of Calcutta.

No. 3129A.—The 25th July 1902.—Mr. W. Maude, Officiating Judicial Commissioner, Chota Nagpur, is appointed to act in the second grade of District and Sessions Judges, with effect from the afternoon of the 21st July 1902, during the absence, on leave, of Mr. R. R. Pope, or until further orders.
Chota Nagpur.

No. 3177A.—The 28th July 1902.—Babu Shoshee Bhooshun Dutt, Deputy Magistrate and Deputy Collector, Burdwan, is appointed to have charge of the Katwa subdivision of that district, during the absence, on leave, of Babu Syam Lal Gupta, or until further orders.
Burdwan.

No. 3204A.—The 29th July 1902.—Mr. J. Lang, I.C.S., is appointed to be a Magistrate and Collector of the third grade, with effect from the 6th June 1902, *vice* Mr. J. H. E. Garrett, confirmed in the second grade.

No. 3208A.—The 29th July 1902.—Mr. P. W. Murphy, Assistant Magistrate and Collector, Saran, is appointed to have charge of the Gopalganj subdivision of that district.
Saran.

This cancels the order of the 1st July 1902, appointing Mr. T. S. Macpherson to have charge of the Gopalganj subdivision.

No. 3210A.—The 29th July 1902.—In modification of the order of the 1st July 1902, Mr. T. S. Macpherson, Assistant Magistrate and Collector, is posted to the head-quarters station of the Saran district.
Saran.

No. 3236A.—The 29th July 1902.—Mr. D. H. Kingsford, Joint-Magistrate and Deputy Collector, is appointed to act as District and Sessions Judge, Bhagalpur, during the absence, on leave, of Mr. W. H. H. Vincent, or until further orders.
Bhagalpur.

ECCLESIASTICAL.—*No. 3109A.—The 25th July 1902.*—The Revd. W. H. Drawbridge is appointed to act as Chaplain of Dinapore, during the absence, on leave, of the Revd. C. Price, or until further orders.
Patna.

No. 3172A.—The 28th July 1902.—The Revd. John Byork, Minister of the Asansol Methodist Episcopal Church, is authorised, under section 6 of Act XV of 1872, to solemnize marriages between persons, one of whom is a Christian or both of whom are Christians, and, under section 9 of the same Act, to grant certificates of marriage between persons who are Native Christians.
Burdwan.

The Revd. John Byork is also appointed, under Act VI of 1886, to be a Registrar of Births and Deaths.

LEGISLATIVE.—*No. 3199A.—The 29th July 1902.*—In exercise of the powers conferred by section 45 of the Indian Councils Act, 1861 (24 and 25 Vict., c. 67), and section 1 of the Indian Councils Act, 1892 (55 and 56 Vict., c. 14), and the orders issued thereunder, and with the previous sanction of His Excellency the Viceroy and Governor-General, the Lieutenant-Governor is pleased to nominate Maulvi Seraj-ul-Islam, Khan Bahadur, to be a Member of the Council of the Lieutenant-Governor of Bengal.
Council.

LEAVE.

GENERAL.—*No. 3175A.—The 28th July 1902.*—Babu Syam Lal Gupta, Deputy Magistrate and Deputy Collector, Katwa, Burdwan, is allowed leave for one month, under article 291 of the Civil Service Regulations, with effect from the afternoon of the 16th July 1902.
Burdwan.

No. 3197A.—The 29th July 1902.—Babu Bangshi Dhar Banerjee, Personal Assistant to the Commissioner of the Patna Division, is allowed leave for two months, under article 291 of the Civil Service Regulations, with effect from the 6th August 1902, or any subsequent date on which he may avail himself of it.

Patna.

No. 3206A.—The 29th July 1902.—Mr. L. P. Shirres, Magistrate and Collector, on special duty, is allowed leave for two months and twenty-two days, under article 291 of the Civil Service Regulations, with effect from the 14th August 1902.

Calcutta.

POLICE.—*No. 3164A.—The 28th July 1902.*—Mr. J. A. Stevens, Officiating District Superintendent of Police, Birbhum, is allowed leave for one month, under article 291 of the Civil Service Regulations, with effect from the date on which he may avail himself of it.

Birbhum.

No. 3191A.—The 29th July 1902.—In modification of the order of the 15th July 1902, Mr. J. V. Ryan, Officiating District Superintendent of Police, Jalpaiguri, is allowed combined leave for eighteen months, viz., privilege leave for three months, under article 264A of the Civil Service Regulations, with effect from the date on which he availed himself of it, and furlough for the remaining period, under article 340 (*b*) of the Regulations.

Jalpaiguri.

POWERS.

GENERAL.—*No. 3097A.—The 24th July 1902.*—Babu Ashutosh Datta, Deputy Collector, Balasore, is vested with the powers of a Collector, under Act I of 1894, in that district.

Balasore.

No. 3100A.—The 24th July 1902.—Babu Banka Bihari Singha, Deputy Collector, Nadia, is vested with the powers of a Collector, under Act I of 1894, in that district.

Nadia.

No. 3161A.—The 28th July 1902.—Mr. J. T. Babonau, Deputy Collector, Rajmahal, Sonthal Parganas, is vested with the powers of a Collector, under the Land Acquisition Act, I of 1894, in that subdivision.

Sonthal Parganas.

No. 3167A.—The 28th July 1902.—Babu Nani Lal Mukerjee, Deputy Collector, Jalpaiguri, is vested with the powers of a Collector, under Act I of 1894, in that district.

Jalpaiguri.

No. 3180A.—The 28th July 1902.—Maulvi Abdool Kadir, Deputy Collector, Madaripur, Faridpur, is vested with the powers of a Collector, under the Land Acquisition Act, I of 1894, in that subdivision.

Faridpur.

No. 3233A.—The 29th July 1902.—Maulvi Syed Abdus Salek, Deputy Collector, Pabna, is vested with the powers of a Collector under the Land Acquisition Act, I of 1894, in that district.

Pabna.

The following orders are republished from the *Assam Gazette*:—

No. 5690G.—The 15th July 1902.—With effect from the 3rd June 1902, in consequence of the absence, on privilege leave, of Mr. F. W. Strong, I.C.S., Officiating Assistant Commissioner, first grade,—

Mr. J. McSwiney, I.C.S., Officiating Assistant Commissioner, second grade, to officiate as Assistant Commissioner, first grade.

Mr. H. L. Thomas, I.C.S., Assistant Commissioner, third grade, to officiate as Assistant Commissioner, second grade.

No. 5725G.—The 16th July 1902.—The following is published:—

The undermentioned officer has been granted by His Majesty's Secretary of State for India extension of leave, as advised in list dated the 20th June 1902:—

Name.	Service.	Appointment.	Period and nature of extension.
Mr. P. G. Melitus, C.I.E.	I.C.S.	Commissioner, Assam.	One month and three days' furlough.

No. 3159J.—The 16th July 1902.—The services of Babu Raj Krishna Bandopadhya, Munsif of Habiganj, in the district of Sylhet, are placed at the disposal of the Government of Bengal.

No. 5915G.—The 21st July 1902.—Mr. S. G. Hart, I.C.S., Assistant Commissioner, Mangaldai, on relief by Mr. F. W. Strong, I.C.S., is posted to Gauhati as Assistant Commissioner.

No. 3250J.—The 19th July 1902.—Under the provisions of section 185A (1) of the Code of Civil Procedure, Act XIV of 1882, the Chief Commissioner directs that Babu Raj Kishore, Munsif of Habiganj, shall take down evidence with his own hand in the English language in civil cases in which an appeal is allowed.

No. 3290J.—The 22nd July 1902.—Babu Durga Charan Sen, Subordinate Judge of Sylhet, is granted leave of absence for three weeks, under article 306 (*b*) of the Civil Service Regulations, in extension of the leave granted to him in Notification No. 2633J., dated the 9th June 1902.

C. E. BUCKLAND,
Chief Secy. to the Govt. of Bengal.

REVENUE DEPARTMENT—(FORESTS).

NOTIFICATION—No. 2767For.

The 24th July 1902.—In consequence of the departure of Mr. T. H. Monteath, Assistant Conservator of Forests, first grade, on three months' privilege leave, Mr. J. L. Baker, Assistant Conservator of Forests, second grade, is promoted to officiate as Assistant Conservator of Forests, first grade, with effect from the 14th July 1902.

W. C. MACPHERSON,
Offg. Secy. to the Govt. of Bengal.

NOTIFICATION—No. 2832For.

The 28th July 1902.—Mr. J. P. Gregson, Extra-Assistant Conservator of Forests, attached to the Chittagong Division, is transferred temporarily to the Sundarbans Division as an Attached Officer.

Chittagong and Khulna.

W. C. MACPHERSON,
Offg. Secy. to the Govt. of Bengal.

REVENUE DEPARTMENT—(OPIUM).

NOTIFICATION—No. 2835-O.

The 28th July 1902.—Mr. C. J. C. Ricker, Assistant Opium Agent, on leave, is appointed to perform the duties of Sub-Deputy Opium Agent, Fyzabad, during the absence, on leave, of Mr. A. C. Bryson.

Fyzabad.

W. C. MACPHERSON,
Offg. Secy. to the Govt. of Bengal.

NOTIFICATION—No. 2836-O.

The 28th July 1902.—Mr. P. P. Donlea, Assistant Opium Agent, attached to the Bihar Agency, is granted privilege leave for forty days, with effect from the 7th October 1902, or any subsequent date on which he may avail himself of it.

Muzaffarpur. (Sitamarhi.)

W. C. MACPHERSON,
Offg. Secy. to the Govt. of Bengal.

NOTIFICATION—No. 2837-O.

The 28th July 1902.—Mr. C. A. Levett-Yeats, Assistant Opium Agent, attached to the Benares Agency, is granted privilege leave for two months, with effect from the 15th August 1902, or any subsequent date on which he may avail himself of it.

Sitapur. (Sidhouli.)

W. C. MACPHERSON,
Offg. Secy. to the Govt. of Bengal.

REVENUE DEPARTMENT—(LAND REVENUE).

NOTIFICATION—No. 2762L.R.

The 24th July 1902.—Babu Jagadis Chandra Lahiri, substantive *pro tempore* Sub-Deputy Collector, is hereby appointed to be an Assistant Settlement Officer in the Mukshudpur Estate, in the district of Gaya, with effect from the 11th February 1902.

Gaya.

W. C. MACPHERSON,
Offg. Secy. to the Govt. of Bengal.

NOTIFICATION—No. 2818L.R.

The 26th July 1902.—Under section 3 of the Bengal Survey Act, V (B.C.) of 1875, the Lieutenant-Governor is pleased to order that a survey be made and the boundaries demarcated of all the lands included within village Kamarsal, thana Kishanganj, pargana Baraur, Revenue Survey No. 213, and village Bhatwar, thana Amirkasba, pargana Ulsjah, Revenue Survey No. 138, in the district of Purnea.

Purnea.

W. C. MACPHERSON,
Offg. Secy. to the Govt. of Bengal.

NOTIFICATION—No. 2819L.R.

The 26th July 1902.—Whereas a survey and the preparation of a record of rights are calculated to avert serious disputes existing and likely to arise between the tenants and their landlords in the villages named below in the district of Purnea :

Purnea.

In exercise of the powers conferred upon him by section 101 (2) (*b*) of the Bengal Tenancy Act, VIII of 1885, as amended by Act III (B.C.) of 1898, the Lieutenant-Governor of Bengal is pleased to direct that a survey be made and a record of rights prepared in respect of the lands situated in the village Kamarsal, thana Kishanganj, pargana Baraur, Revenue Survey No. 213, and village Bhatwar, thana Amirkasba, pargana Ulsjah, Revenue Survey No. 138, in the district of Purnea.

The particulars to be recorded in the survey and record of rights shall be the following :—

(*a*) The name of each tenant or occupant.

(*b*) The class to which each tenant belongs, that is to say, whether he is a tenure-holder, raiyat holding at fixed rates, settled raiyat, occupancy raiyat, non-occupancy raiyat, or under-raiyat, and, if he is a tenure-holder, whether he is a permanent tenure-holder or not, and whether his rent is liable to enhancement during the continuance of his tenure.

(*c*) The situation and quantity and one or more of the boundaries of the land held by each tenant or occupier.

(*d*) The name of each tenant's landlord.

(*e*) The money-rent payable at the time the record of rights is being prepared, or if a produce-rent is payable, the fact that a produce-rent is paid, the proportion which such rent bears to the whole produce and the method by which such rent is ascertainable.

(*f*) The mode in which that rent has been fixed, whether by contract, by order of a Court, or otherwise.

(*g*) If the rent is a gradually increasing rent, the time at which, and the steps by which, it increases.

(*h*) The special conditions and incidents, if any, of the tenancy.

(*i*) If the land is claimed to be held rent-free, whether or not rent is actually paid, and if not paid, whether or not the occupant is entitled to hold the land without payment of rent, and if so entitled, under what authority.

(*j*) The name of each proprietor, including rent-free owner, with the character and extent of his interest, and the situation, quantity, and one or more of the boundaries of the proprietor's private lands, as defined in Chapter XI of the Act.

W. C. MACPHERSON,
Offg. Secy. to the Govt. of Bengal.

NOTIFICATION—No. 2830L.R.

The 28th July 1902.—Babu Prabodh Chandra Chatterjee, Deputy Magistrate and Deputy Collector, at present employed as an Assistant Settlement Officer in North Bihar, is allowed, under article 291 of the Civil Service Regulations, privilege leave for two months, with effect from the 7th July 1902.

Saran.
Darbhanga.
Monghyr.
Purnea.

W. C. MACPHERSON,
Offg. Secy. to the Govt. of Bengal.

NOTIFICATION—No. 2831L.R.

The 28th July 1902.—Mr. C. H. J. Craven, Deputy Magistrate and Deputy Collector, now employed as an Assistant Settlement Officer in the Sonthal Parganas, is allowed privilege leave, under article 291 of the Civil Service Regulations, for one month with effect from the 13th July, 1902, or any subsequent date on which he may have availed himself of it.

Sonthal Parganas.

W. C. MACPHERSON,
Offg. Secy. to the Govt. of Bengal.

NOTIFICATION—No. 2838L.R.

The 28th July 1902.—Government Notification No. 1986T.R., dated the 4th November 1901, which was published at page 1383, Part I of the *Calcutta Gazette* of the 6th idem, ordering, under section 101 (2) (*a*) of the Bengal Tenancy Act, a survey and record of rights to be made in respect of estate Salimpur, pargana Ghayaspur, tauzi No. 774, in the district of Patna, is hereby cancelled.

Patna.

W. C. MACPHERSON,
Offg. Secy. to the Govt. of Bengal.

NOTIFICATION—No. 2853L.R.

The 29th July 1902.—The following draft rule which it is proposed to make under section 189 of the Bengal Tenancy Act, VIII of 1885, as amended by the Bengal Tenancy (Amendment) Act, III of 1898, and to be substituted for clause (*c*), rule 4, Chapter VI of the Rules, published under Notification No. 111(L.R.), dated the 10th January, 1899, at pages 33-42, Part I of the *Calcutta Gazette* of the 11th idem, is hereby published for general information under the provisions of section 190 (1) of the said Act.

Any objection or suggestion which any person may desire to make with respect to the draft should be submitted to the Secretary to the Government of Bengal in the Revenue Department, Calcutta, before the 30th August 1902, on which date the draft will be taken into consideration.

Draft rule.

"When there is a considerable difference between the boundary according to the revenue survey map and the existing boundary of the village as ascertained by the Revenue Officer, that officer should ascertain if the existing village has been correctly demarcated. He is to bear in mind that, for the purpose of ascertaining the existence of occupancy rights, saving in the case of *char* and *deara* lands to which the provisions of section 180 of the Bengal Tenancy Act apply, the boundary of the village as laid down in the revenue survey map is operative, not that which he may find to be at present adopted. The existing boundary should be followed for the purposes of map and record, but the boundary of the revenue survey shall also be indicated on the new village map."

W. C. MACPHERSON,
Offg. Secy. to the Govt. of Bengal.

GENERAL DEPARTMENT—(EMIGRATION).

NOTIFICATION—No. 2321.

The 29th July 1902.—Under clause (2) of section 14 of the Indian Emigration Act, XXI of 1883, the Lieutenant-Governor approves the resumption by Mr. L. Grommers of the duties of Emigration Agent at Calcutta for Surinam with effect from the 22nd July 1902.

Calcutta.

W. C. MACPHERSON,
Offg. Secy. to the Govt. of Bengal.

FINANCIAL DEPARTMENT—(MISCELLANEOUS).

NOTIFICATION—No. 3577Mis.

The 28th July 1902.—Under section 25 of Act XXVI of 1881, entitled the "Negotiable Instruments Act, 1881," the Lieutenant-Governor hereby declares the 9th August 1902, the date fixed for the Coronation of His Majesty the King-Emperor, to be a public holiday.

E. W. COLLIN,
Offg. Secy. to the Govt. of Bengal.

MEDICAL DEPARTMENT.

No. 1863Medl.—The 18th July 1902.—Military Assistant Surgeon W. Clarke, House Surgeon, Howrah General Hospital, is allowed privilege leave for two months, under article 291 of the Civil Service Regulations, with effect from the 1st June 1902, or any subsequent date on which he may have availed himself of it.

Howrah.

E. W. COLLIN,
Offg. Secy. to the Govt. of Bengal.

JUDICIAL DEPARTMENT.

No. 3240A.

APPOINTMENTS AND TRANSFERS.

No. 3082A.D.—The 23rd July 1902.—Babu Nundo Lal Dey is appointed to act as Subordinate Judge, Saran, during the absence, on leave, of Babu Mati Lal Halder, or until further orders.

Saran.

No. 3117A.—The 25th July 1902.—Babu Trailakya Nath Som, Munsif of Narail, under orders of transfer to Kalna, in the district of Burdwan, on leave, is appointed to be an Additional Munsif in the district of Burdwan.

Burdwan.

No. 3119A.—The 25th July 1902.—Babu Tincoury Chowdry, Additional Munsif in the district of Burdwan, on deputation to Kalna, is appointed to be a Munsif in the same district, to be ordinarily stationed at Kalna, and is vested with the powers of a Judge of a Court of Small Causes for the trial of suits cognizable by such a Court up to the value of Rs. 100, and with the functions of a District Court, under section 26, sub-section (1) of Act VII of 1889, within the local limits of the Kalna Munsifi.

Burdwan.

No. 3121A.—The 25th July 1902.—Babu Tej Chandra Mitter, B.L., is appointed to act as an Additional Munsif in the district of Burdwan, on deputation to Kalna, during the absence, on leave, of Babu Trailakya Nath Som, or until further orders.

Burdwan.

No. 3142A.—The 26th July 1902.—Babu Syam Chand Ray, Subordinate Judge, Dacca, on deputation to Birbhum, is appointed to be Subordinate Judge of Birbhum.

Dacca.
Birbhum.

No. 3146A.—The 26th July 1902.—Babu Dina Nath Sarkar, substantive *pro tempore* Additional Subordinate Judge, Mymensingh, is appointed to be substantive *pro tempore* Subordinate Judge of that district.

Mymensingh.

No. 3148A.—The 26th July 1902.—Babu Jogendra Chandra Maulik, Officiating Additional Subordinate Judge, Pabna and Bogra, is appointed to be Subordinate Judge, Pabna and Bogra.

Pabna and Bogra.

No. 3150A.—The 26th July 1902.—Babu Rajendra Coomar Bose, Additional Subordinate Judge, Faridpur, is appointed to be Additional Subordinate Judge, Faridpur and Mymensingh. He will continue to be also Assistant Sessions Judge of Faridpur.

Faridpur.
Mymensingh.

No. 3153A.—The 26th July 1902.—Babu Karuna Das Bose, Subordinate Judge, Bhagalpur, is appointed to be also an Assistant Sessions Judge and is posted to Saran as Subordinate Judge and Assistant Sessions Judge.

Bhagalpur.
Saran.

No. 3155A.—The 26th July 1902.—Babu Mati Lal Haldar, Subordinate Judge, Saran, is appointed to be Subordinate Judge, Bhagalpur, and also *ex-officio* Subordinate Judge of Monghyr.

Saran.
Bhagalpur.
Monghyr.

No. 3158A.—The 26th July 1902.—Babu Tej Chandra Mukerjee, Subordinate Judge, Saran, is appointed to perform the functions of a Court, under section 3, clause (*d*), of Act I of 1894, within the local limits of the original jurisdiction of the District Judge of Saran.

Saran.

No. 3194A.—The 29th July 1902.—The services of Babu Bunwari Lal Banerjee, Munsif of Munshiganj, in the district of Dacca, are placed at the disposal of the Hon'ble the Chief Commissioner of Assam.

Dacca.

This cancels the order of the 11th July 1902, placing the services of Babu Annada Charan Sen, Munsif of Munshiganj, in the district of Dacca, at the disposal of the Hon'ble the Chief Commissioner of Assam.

No. 2251J.D.—The 16th July 1902.—Babu Rassick Lal Roy is appointed to be an Honorary Magistrate of the Independent Bench at Sealdah, in the district of the 24-Parganas.

24-Parganas.

No. 3044J.—The 24th July 1902.—Maulvi Abdul Wali is appointed to be an Honorary Magistrate of the Sadar Independent Bench, in the district of Rajshahi.

Rajshahi.

No. 3049J.—The 24th July 1902.—Babu Hans Prasad Singh is appointed to be an Honorary Magistrate of the Independent Bench at Sonbursa, in the district of Bhagalpur.

Bhagalpur.

No. 3060J.—The 24th July 1902.—Mr. Charles Fox is appointed to be an Honorary Magistrate of the Sadar (Arrah) Independent Bench, in the district of Shahabad.

Shahabad.

No. 3065J.—The 24th July 1902.—Babu Govinda Bihari Singh is appointed to be an Honorary Magistrate of the Independent Bench at Bihar, in the district of Patna.

Patna.

No. 3068J.—The 24th July 1902.—Maulvi Mohammed Inayat Karim is appointed to be an Honorary Magistrate of the Independent Bench at Jahanabad, in the district of Gaya.

Gaya.

No. 3105J.—The 26th July 1902.—The undermentioned gentlemen are re-appointed to be Honorary Magistrates of the Benches mentioned against their names, in the district of Mymensingh:—

Mymensingh.

Babu Jagadish Guha ... ... Sadar Independent Bench.
„ Peari Mohan Roy ... ... } Kishorganj Independent Bench.
„ Ananda Chandro Bhattacharjee ... }

No. 3108J.—The 26th July 1902.—The undermentioned gentlemen are re-appointed to be Honorary Magistrates of the Benches mentioned against their names, in the district of Backergunge:—

Backergunge.

Babu Protap Chandra Mukerjee ... } Sadar Independent Bench.
Maulvi Obedul Gani ... ... }
„ Syed Anwar Ali ... ... Patuakhali Independent Bench.

No. 3122J.—The 26th July 1902.—Babu Ambika Pershad Singh is appointed to be an Honorary Magistrate of the Independent Bench at Aurangabad, in the district of Gaya.

Gaya.

No. 3218J.—The 29th July 1902.—Babu Janeshwar Sing is appointed to be an Honorary Magistrate of the Independent Bench at Madhipura, in the district of Bhagalpur.

Bhagalpur.

LEAVE.

No. 3238A.—The 24th July 1902.—Babu Amrita Lal Palit, Munsif of Burdwan, is allowed leave for one month, under article 306 (*b*) of the Civil Service Regulations, with effect from the date on which he availed himself of it.

Burdwan.

The 24th July 1902.—Babu Nagendra Nath Chatterjee, Munsif, under orders of transfer to Munshiganj, in the district of Dacca, is allowed leave for one month, under article 306 (*b*) of the Civil Service Regulations, in extension of that granted to him under the order of the 7th July 1902.

Dacca.

No. 3127A.—The 25th July 1902.—Babu Bipradas Chatterji, Subordinate Judge, Tirhut, is allowed leave for one month, under articles 306 (*b*) and 377 of the Civil Service Regulations, with effect from the 19th July 1902, or from the date on which he availed himself of it.

Tirhut.

RESIGNATIONS.

No. 3054J.—The 24th July 1902.—The Lieutenant-Governor accepts the resignations tendered by the following gentlemen of their appointments as Honorary Magistrates of the Ranchi Independent Bench, in the district of Ranchi:—

Ranchi.

Babu Jagadis Chandra Roy. | Babu Naresh Chandra Mitra.
Babu Tripura Charan Roy.

No. 3058J.—The 24th July 1902.—The Lieutenant-Governor accepts the resignation tendered by Mr. Charles Fox of his appointment as an Honorary Magistrate of the Dumraon Independent Bench, in the district of Shahabad.

Shahabad.

No. 3063J.—The 24th July 1902.—The Lieutenant-Governor accepts the resignation tendered by Babu Lal Bihari Singh of his appointment as an Honorary Magistrate of the Bihar Independent Bench, in the district of Patna.

Patna.

No. 3205J.—The 28th July 1902.—The Lieutenant-Governor accepts the resignations tendered by Babu Sree Kuntha Roy and Babu Poran Marowari of their appointments as Honorary Magistrates of the Jhalda Independent Bench, in the district of Manbhum.

Manbhum.

No. 3207J.—The 28th July 1902.—The Lieutenant-Governor accepts the resignation tendered by Maulvi Saiyyad Abdul Hali Musawi of his appointment as an Honorary Magistrate of the Jahanabad Independent Bench, in the district of Gaya.

Gaya.

No. 3215J.—The 29th July 1902.—The Lieutenant-Governor accepts the resignation tendered by Shahebzada Walli Mahomed Shah of his appointment as an Honorary Magistrate of the Alipore Independent Bench, in the district of the 24-Parganas.

24-Parganas.

POWERS.

No. 3089A.—The 23rd July 1902.—The following officers are vested with the powers of a Magistrate of the first class:—

Hazaribagh. Mr G. E. Lambourn, Assistant Magistrate, Hazaribagh.
Saran. „ P. W. Murphy, Assistant Magistrate, Saran
Shahabad. „ H. R. T. S. Perrott, Assistant Magistrate, Shahabad.

No. 3106A.—The 24th July 1902.—Babu Basanto Kumar Raha, Deputy Magistrate, Bankura, is vested with powers under section 133 of the Code of Criminal Procedure.

Bankura.

No. 3123A.—The 25th July 1902.—Mr. C. W. E. Connolly, substantive *pro tempore* Deputy Magistrate, Dinajpur, is vested with the powers of a Magistrate of the second class.

Dinajpur.

No. 3227A.—The 29th July 1902.—In exercise of the power conferred by sub-section (1) of section 565 of the Code of Criminal Procedure, 1898, the Lieutenant-Governor is pleased to empower the following Magistrate of the first class in the district of Mymensingh, viz., Babu Romani Mohan Das, to order, at the time of passing sentence of imprisonment on any person referred to in that sub-section, that the residence or change of residence of such person after release shall be notified as provided by the rules made under sub-section (3) of the said section.

Mymensingh.

Babu Romani Mohan Das is also vested with powers under sections 133 and 524 of the Code of Criminal Procedure.

Under the authority vested in the Local Government by sub-section (2), section 8 of the Reformatory Schools Act, VIII of 1897, the Lieutenant-Governor is pleased to invest Babu Romani Mohan Das with the powers conferred by sub-section (1) of the said section.

No. 3229A.—The 29th July 1902.—In exercise of the power conferred by sub-section (1) of section 565 of the Code of Criminal Procedure, 1898, the Lieutenant-Governor is pleased to empower the following Magistrate of the first class in the district of Mymensingh, viz., Babu Anath Bandhu De, to order, at the time of passing sentence of imprisonment on any person referred to in that sub-section, that the residence or change of residence of such person after release shall be notified as provided by the rules made under sub-section (3) of the said section.

Mymensingh.

Babu Anath Bandhu De is also vested with powers under sections 110, 133 and 524 of the Code of Criminal Procedure.

Under the authority vested in the Local Government by sub-section (2), section 8 of the Reformatory Schools Act, VIII of 1897, the Lieutenant-Governor is pleased to invest Babu Anath Bandhu De with the powers conferred by sub-section (1) of the said section.

No. 3231A.—The 29th July 1902.—Maulvi Syed Mohamed Yusoof Ali, Munsif of Sasaram, in the district of Shahabad, is vested with powers, under section 153 (*b*) of the Bengal Tenancy Act, VIII of 1885, to exercise final jurisdiction in the trial of suits for the recovery of rent.

Shahabad.

No. 2252J.D.—The 16th July 1902.—Babu Rassick Lal Roy, an Honorary Magistrate of the Independent Bench at Sealdah, in the district of the 24-Parganas, is vested with the powers of a Magistrate of the third class.

24-Parganas.

Under the authority vested in him by section 357, sub-section 2 of the Code of Criminal Procedure, Act V of 1898, the Lieutenant-Governor empowers Babu Rassick Lal Roy to take down evidence in criminal cases in the English language.

No. 3034J.—The 23rd July 1902.—Babu Harish Chandra Neogy, an Honorary Magistrate of the Independent Bench at Sealdah, in the district of the 24-Parganas, is vested with the powers of a Magistrate of the second class, and is also authorised to sit singly for the trial of such cases as may be made over to him by the District Magistrate.

24-Parganas.

Under the authority vested in him by section 357, sub-section 2 of the Code of Criminal Procedure, Act V of 1898, the Lieutenant-Governor empowers Babu Harish Chandra Neogy to take down evidence in criminal cases in the English language.

No. 3045J.—The 24th July 1902.—Maulvi Abdul Wali, who has been appointed to be an Honorary Magistrate of the Sadar Independent Bench, in the district of Rajshahi, is vested with the powers of a Magistrate of the third class.

Rajshahi.

Under the authority vested in him by section 357, sub-section 2 of the Code of Criminal Procedure, Act V of 1898, the Lieutenant-Governor empowers Maulvi Abdul Wali to take down evidence in criminal cases in the English language.

No. 3050J.—The 24th July 1902.—Babu Hans Prasad Singh, who has been appointed to be an Honorary Magistrate of the Independent Bench at Sonbursa, in the district of Bhagalpur, is vested with the powers of a Magistrate of the third class.

Bhagalpur.

No. 3056J.—The 24th July 1902.—Babu Girwardhari Lal, an Honorary Magistrate of the Independent Bench at Motihari, in the district of Champaran, is authorised to sit singly for the trial of such cases as may be made over to him by the Magistrate of Champaran.

Champaran.

Under the authority vested in him by section 357, sub-section 2 of the Code of Criminal Procedure, Act V of 1898, the Lieutenant-Governor empowers Babu Girwardhari Lal to take down evidence in criminal cases in the English language.

No. 3061J.—The 24th July 1902.—Mr. Charles Fox, who has been appointed to be an Honorary Magistrate of the Sadar (Arrah) Independent Bench, in the district of Shahabad, is vested with the powers of a Magistrate of the second class. He is also authorised to sit singly for the trial of such cases as may be made over to him by the Magistrate of Shahabad.

Shahabad.

No. 3066J.—The 24th July 1902.—Babu Govinda Bihari Singh, who has been appointed to be an Honorary Magistrate of the Bihar Independent Bench, in the district of Patna, is vested with the powers of a Magistrate of the third class.

Patna.

No. 3069J.—The 24th July 1902.—Maulvi Mohammed Inayat Karim, who has been appointed to be an Honorary Magistrate of the Independent Bench at Jahanabad, in the district of Gaya, is vested with the powers of a Magistrate of the third class.

Gaya.

No. 3030J.—The 25th July 1902.—Babu Bepin Behary Das Gupta, Additional Munsif of Dacca and Manikganj, on deputation to Dacca, is vested with the powers of a Judge of a Court of Small Causes for the trial of suits cognizable by such a Court up to the value of Rs. 100, within the local limits of the Dacca Munsifi.

Dacca.

No. 3106J.—The 26th July 1902.—Babu Jagadish Guha, who has been re-appointed to be an Honorary Magistrate of the Sadar Independent Bench, in the district of Mymensingh, is vested with the powers of a Magistrate of the second class.

Mymensingh.

Under the authority vested in him by section 357, sub-section 2 of the Code of Criminal Procedure, Act V of 1898, the Lieutenant-Governor empowers Babu Jagadish Guha, an Honorary Magistrate of the Sadar Independent Bench, in the district of Mymensingh, to take down evidence in criminal cases in the English language.

Mymensingh.

Babu Peari Mohan Roy and Babu Ananda Chandro Bhattacharjee, who have been re-appointed to be Honorary Magistrates of the Kishorganj Independent Bench, in the district of Mymensingh, are vested with the powers of a Magistrate of the third class.

No. 3109J.—The 26th July 1902.—The undermentioned gentlemen, who have been re-appointed to be Honorary Magistrates of the Benches mentioned against their names, in the district of Backergunge, are vested with the powers of a Magistrate of the third class:—

Backergunge.

Maulvi Obedul Gani	...	... Sadar Independent Bench.
„ Syed Anwar Ali	...	... Patuakhali Independent Bench.

Babu Protap Chandra Mukerjee, who has been re-appointed to be an Honorary Magistrate of the Sadar Independent Bench, in the district of Backergunge, is vested with the powers of a Magistrate of the second class.

No. 3123J.—The 26th July 1902.—Babu Ambika Pershad Singh, who has been appointed to be an Honorary Magistrate of the Independent Bench at Aurangabad, in the district of Gaya, is vested with the powers of a Magistrate of the third class.

Gaya.

No. 3052J.—The 25th July 1902.—Babus Soshi Bhusan Rai and Nil Kanta Chowdhury, Honorary Magistrates of the Independent Bench at Naugaon, in the district of Rajshahi, are vested with the powers of a Magistrate of the second class.

Rajshahi.

Babu Soshi Bhusan Rai is also authorised to sit singly for the trial of such cases as may be made over to him by the Subdivisional Officer of Naugaon.

Under the authority vested in him by section 357, sub-section 2 of the Code of Criminal Procedure, Act V of 1898, the Lieutenant-Governor empowers Babus Soshi Bhusan Rai and Nil Kanta Chowdhury to take down evidence in criminal cases in the English language.

No. 3214J.—The 29th July 1902.—Under the authority vested in him by section 357, sub-section 2 of the Code of Criminal Procedure, Act V of 1898, the Lieutenant-Governor empowers the following Honorary Magistrates, who are attached to the Benches mentioned in the district of the 24-Parganas, to take down evidence in criminal cases in the English language:—

24-Parganas.

Alipore Independent Bench.

Babu Shama Churn Bose.	Babu Sidheswar Roy Chowdhuri.
„ Sadanunda Banerjee.	Revd. Kali Pudo Banerjee.
„ Suresh Chunder Mitter.	Babu Amulya Charan Addy.
„ Tarapada Ghose.	„ Pravash Chandra Mitter.
„ Joges Chandra Sing.	„ Satish Chandra Ghosh.

Sahebzada Gholam Muhammad.

Baruipur Independent Bench.

Babu Brojendro Kumar Roy Chowdhury.	Babu Durga Das Roy Choudhuri.
	„ Surat Kumar Rai Chaudhuri.

Rajpur Independent Bench.

Babu Kali Das Bosu.

Budge-Budge Independent Bench.

Babu Rasik Lal Ghosh.

Jaynagar Independent Bench.

Babu Jogendra Nath Mitter.	Babu Beraj Krishna Datta.

Taki Municipal Bench.

Babu Troilukya Nath Roy Chowdhury.	Babu Annada Charan Bose.

Sealdah Independent Bench.

Mr. Rustomjee Harjebhoy Manakjee Rustomjee.	Maulvi Mahomed Ekramul Huq.
	Babu Apurba Chandra Biswas.

Maulvi Mahomed Nooral Huq.

No. 3219J.—The 29th July 1902.—Babu Janeshwar Sing, who has been appointed to be an Honorary Magistrate of the Independent Bench at Madhipura, in the district of Bhagalpur, is vested with the powers of a Magistrate of the third class.

Bhagalpur.

C. E. BUCKLAND,
Chief Secy. to the Govt. of Bengal.

NOTIFICATION—No. 3211J.

The 29th July 1902.—Under section 3, Act I (B.C.) of 1876 (an Act to provide for the voluntary registration of Muhammadan marriages and divorces), the Lieutenant-Governor has been pleased to grant a license to Maulvi Mohamed Amjad Ali, authorizing him, as a temporary measure, to register Muhammadan marriages and divorces, and to exercise the other functions of a Muhammadan Registrar within the police-station of Chandina, in the district of Tippera, *vice* Maulvi Murtiza Ali, on leave.

Tippera.

C. E. BUCKLAND,
Chief Secy. to the Govt. of Bengal.

NOTIFICATION—No. 3212J.

The 29th July 1902.—Under section 2, Act XII of 1880 (an Act for the appointment of persons to the office of Kazi), the Lieutenant-Governor has been pleased to grant a sanad (license) to Maulvi Mohamed Amjad Ali, appointing him, as a temporary measure, Kazi of thana Chandina, in the district of Tippera, for the celebration of marriages and the performance of other rites and ceremonies, when application is made to him to perform any such functions, *vice* Maulvi Murtiza Ali, on leave.

Tippera.

C. E. BUCKLAND,
Chief Secy. to the Govt. of Bengal.

NOTIFICATION—No. 3237J.

The 29th July 1902.—It is hereby notified that the Subordinate Judge of Hazaribagh, Ranchi and Palamau in Chota Nagpur will hold sittings at Hazaribagh from the 8th September 1902 till further orders for the trial there of original suits and appeals.

Hazaribagh.

C. E. BUCKLAND,
Chief Secy. to the Govt. of Bengal.

NOTIFICATION—No. 3251J.

The 29th July 1902.—In exercise of the powers conferred by section 2 of Bengal Act II of 1867 (*an Act to provide for the punishment of public gambling and the keeping of common gaming-houses in the territories subject to the Lieutenant-Governor of Bengal*), the Lieutenant-Governor is pleased—

Dinajpur.

(*a*) to extend the said Act, with effect from the 15th August 1902, to the town of Raiganj, comprising villages Dowlatpur, Mohanbati and Raiganj, in thana Raiganj, in the district of Dinajpur, and

(*b*) to define the limits of the said town as follows:—

North—Nichibari.
West—The River Kulik.
South—Pirgachi.
East—Barapooker, Brown Shaheb's temple and Kujapara top.

C. E. BUCKLAND,
Chief Secy. to the Govt. of Bengal.

PROCLAMATION—No 3263J.

The 29th July 1902.—Under section 15 of Act V of 1861 (as amended by Act VIII of 1895), the Lieutenant-Governor declares that the conduct of the inhabitants of the villages Madhwapur, Birit, Rampur, Hanumannaggar, Baski Behari, Balwa, Sukaniputti, Durgaputti, Sujayatpur, and Madhudih, in the jurisdiction of outpost Madhwapur, subordinate to police-station Banipati, within the subdivision of Madhubani, in the district of Darbhanga, has rendered it expedient to increase the number of the police force by the appointment of an additional force to be quartered therein at the cost of the inhabitants of the aforesaid villages.

Darbhanga.

This proclamation shall remain in force for a period of one year from this date.

C. E. BUCKLAND,
Chief Secy. to the Govt. of Bengal.

POLICE DEPARTMENT.

NOTIFICATION—No. 3198J.

The 28th July 1902.—The following draft of certain amendments which it is proposed to make in the rules for the manufacture, possession and sale of explosives in the Lower Provinces of Bengal is published, as required by section 18 of the Indian Explosives Act (IV of 1884), and the Government of India, Home Department Notification No. 1964, dated the 2nd September 1887, for the information of persons likely to be affected thereby, and notice is hereby given that the draft will be taken into consideration by the Lieutenant-Governor after one month from the date of this notification.

2. Any objection or suggestion which may be received from any person with respect to the draft within that period will be considered by the Lieutenant-Governor.

Draft amendments.

1. To rule 9 prefix the words "save as hereinafter provided," and add the following proviso to the rule, viz :—

"Provided that the holder of a license duly granted in Form VI-B or in Form VII-B under rule 11 of the Rules made under the Indian Arms Act, 1878 (XI of 1878), may, on production of such license before the District Magistrate, or, in a Presidency town and its suburbs, before the Commissioner of Police, be granted a license under rule 8 without payment of fees."

2. Insert the words "granted by the like authority" after the words "a like license" in rule 36.

C. E. BUCKLAND,
Chief Secy. to the Govt. of Bengal.

PUBLIC WORKS DEPARTMENT.

ESTABLISHMENT.

The 25th July 1902.

No. 164.—The Lieutenant-Governor is pleased to make the following promotions and reversion in the Engineer Establishment with effect from the dates specified :—

NAMES.	From—	To—	With effect from—	Nature of promotion.
Huntingford, G. T. ...	Assistant Engineer, 1st grade.	Executive Engineer, 3rd grade.	21st May 1902 ...	Temporary.
Swarup, Bishan ...	Assistant Engineer, 1st grade, sub. *pro tem.*	Ditto ...	26th " " ...	Ditto.
Swarup, Bishan ...	Executive Engineer, 3rd grade, temporary rank.	Assistant Engineer, 1st grade, sub. *pro tem.*	3rd July " ...	Reversion.

The 28th July 1902.

No. 165.—Mr. H. Wardle, Assistant Engineer, second grade, Eastern Sone Division, is granted privilege leave for six weeks, under paragraph 191 of the Public Works Department Code, Volume I, and Article 291 of the Civil Service Regulations, with effect from the 9th July 1902.

D. B. HORN,
Offg. Secy. to the Govt. of Bengal.

IRRIGATION DEPARTMENT.

The 29th July 1902.

No. 166.—Declaration.—Whereas it appears to the Lieutenant-Governor of Bengal that land is required to be taken by Government at the public expense for a public purpose, viz., for a village channel at Haldia, in the villages noted below, parganas Jhenkur and Tiron, zilla Cuttack, it is hereby declared that for the above purpose a piece of land measuring, more or less, 12 acres 1 rood and 9·2 poles of standard measurement, commencing from mauza Gobindpur, passing through mauzas Bhotagan, Tatmool, Chatolo, Khodalo, Haldia, and terminating at Poori Jena, is required within the aforesaid villages of parganas Jhenkur and Tiron.

This declaration is made, under the provisions of section 6 of Act I of 1894, to all whom it may concern.

A plan of the land may be inspected in the office of the Land Acquisition Officer, Irrigation Branch, Cuttack.

No. 167.—Declaration.—Whereas it appears to the Lieutenant-Governor of Bengal that land is required to be taken by Government at the public expense for a public purpose, viz., for the construction of a retired line in the 4th mile of Darkeswar right embankment No. 7, in the village of Radhaballavpur, pargana Jehanabad, zilla Hooghly, it is hereby declared that for the above purpose a piece of land measuring, more or less, 10 bighas 17 cottahs and 2 chitaks of standard measurement, bounded on the north by Sricharan Hari's lakhraj, Baburam and Baneswar Kumbhakars' mal land, Haru Mondal's lakhraj, Sebait Kristo Pandit's debattar in jote of Dharma Das Dagoor and Akrur Kumbhakar's mal land, on the north-west by shibottar land in jote of Bhulu Das, on the west by mal land (khas), Dharma Das Dagoor's lakhraj, Shamsuddin and others' pirottar, Trilok Hazra's lakhraj, Bholanath Das, Gour Kulosi and Netai Kulosi's mal land, Trilok Hazra's lakhraj, on the south by old embankment, on the east by Trilok Hazra's lakhraj, Gour Kulosi and Baburam Bhandarie's mal land, Trilok Hazra, Nibaron Palodhi and others' lakhraj, on the south-east by Amulya Kumar's mal land, on the south by Akrur Kumbhakar's mal land, Sebait Kristo Pandit's debottar in jote of Dharma Das Dagoor, Baburam's shibottar, Baburam and Baneswar Kumbhakars' mal land, and on the east by old embankment, is required within the aforesaid village of Radhaballavpur.

This declaration is made, under the provisions of section 6 of Act I of 1894, to all whom it may concern.

A plan of the land may be inspected in the office of the Collector of Hooghly.

D. B. HORN,
Offg. Secy. to the Govt. of Bengal.

RAILWAY DEPARTMENT.

The 29th July 1902.

No. 152R.—Declaration.—Whereas it appears to the Lieutenant-Governor of Bengal that land is required to be taken by Government at the public expense for a public purpose, viz., for the Giridih collieries waterway of the East Indian Railway Company, in the village of Bharandiha, pargana Kharakdiha, zilla Hazaribagh, it is hereby declared that for the above purpose a piece of land measuring, more or less, 6 bighas 18 cottahs 14 chitaks of standard measurement, or 2·29 acres, bounded on the north by jote of Pundoo Manjhi and land of Ranigunge Coal Association, Limited, and on the south, east, and west by land of Ranigunge Coal Association, Limited, is required within the aforesaid village of Bharandiha, Estate Shirampore.

Mines of coal, iron-stone, slate or other minerals lying under the land, except only such parts of the mines and minerals as it may be necessary to dig or carry away, or use in the construction of the work for the purpose of which the land is being acquired, are not needed.

This declaration is made, under the provisions of section 6, Act I of 1894, and section 3, clause (1), Act XVIII of 1885, to all whom it may concern.

A plan of the land may be inspected in the office of the Deputy Commissioner of Hazaribagh and in that of the District Engineer, East Indian Railway, Asansol.

W. A. INGLIS,
Offg. Secy. to the Govt. of Bengal.

MARINE DEPARTMENT.

The 25th July 1902.

No. 98 Marine.—The following Notification No. 1726, dated the 18th July 1902, issued by the Government of India, relative to the disappearance of plague in Sydney, is published for general information.

D. B. HORN,
Offg. Secy. to the Govt. of Bengal.

No. 1726, dated Simla, the 18th July 1902.

NOTIFICATION—By the government of India, Home Department.

THE following telegram is published for general information:—

Telegram dated Sydney, the 15th July 1902.

From—The Governor, New South Wales,
To—His Excellency the Viceroy.

Bubonic plague in Sydney. My Minister advises no cases since 12th ultimo, all patients recovering. Issue of clean bill of health commenced 1st July.

The 25th July 1902.

No. 99 Marine.—It is hereby notified for general information that the Lieutenant-Governor has been pleased to sanction the following revised rules for regulating the local traffic between Chittagong and Rangamati, and for the towing of vessels to sea from the port of Chittagong, in supersession of those sanctioned under Notification No. 64 Marine, dated the 26th May 1896.

D. B. HORN,
Offg. Secy. to the Govt. of Bengal.

Rules for the Steamer Service between Chittagong and Rangamati.

THE Government steamer will ordinarily start from Chittagong weekly with the flood tide for Rangamati. The time for leaving Rangamati will be previously notified by the serang in charge with the approval of the Port Officer, Chittagong.

2. The above rule is subject to changes dependent on season, which will always be previously notified by the Divisional Commissioner.

3. The steamer will be at the ghat at least one hour before the time fixed for starting in order to allow for shipment of cargo.

4. The following table gives the passenger fares between the termini and intermediate halting places :—

	First Class.		Second Class.		Third Class.		Fourth Class.	
	From Chittagong. Up.	From Rangamati. Down.	From Chittagong. Up.	From Rangamati. Down.	From Chittagong. Up.	From Rangamati. Down.	From Chittagong. Up.	From Rangamati. Down.
1	2	3	4	5	6	7	8	9
	Rs. A.	Rs. A.	Rs. A.	Rs. A.	Rs. A.	Rs. A.	Rs. A.	Rs. A.
To Chittagong ...	.....	6 0	.....	4 8	.....	2 0	.....	1 0
„ Lamboor Hat	1 0	5 0	0 10	3 15	0 4	1 12	0 2	0 14
„ Bhandarjuri ...	1 8	3 0	1 2	3 6	0 8	1 8	0 4	0 12
„ Sylook ...	2 8	2 0	1 11	2 13	0 12	1 4	0 6	0 10
„ Chandraghona	3 0	1 8	2 4	2 4	1 0	1 0	0 8	0 8
„ Kaptai ...	5 0	1 0	3 6	1 2	1 8	0 8	0 12	0 4
„ Rangamati ...	6 0	.....	4 0	.....	2 0	.....	1 0	.....

Return tickets, 1st and 2nd class, available for 1 month at 1½ fares.

N.B.—Mattresses, crockery, glass, cooking utensils and cabin furniture, but no provisions are supplied to first and second class passengers.

5. The steamer will stop at the following halting places to land and pick up passengers and cargo :—

1. Lamboor Hat.
2. Bhandarjuri.
3. Sylook.
4. Chandraghona.
5. Kaptai.

6. All Government officers, with the exception of the Divisional Commissioner, travelling by this service are required to pay the above fares.

Towage rates from moorings to sea or from one mile outside the Outer Bar buoys to moorings.

Tons.	Ballast in and loaded outwards. Rs.	Loaded inwards and outwards. Rs.
Vessels under—		
100	50	65
100 to 200	110	145
200 to 300	180	225
Other vessels under—		
500	260	336
500 to 600	288	391

Vessels taking steam one way to pay two-third rates. A charge of Rs. 30 to be charged for every time steam is raised and not availed of by any person or vessel making the application. Daily hire within port limits for towage of boats from 6 A.M. to 6 P.M., Rs. 60. For every hour before or after, Rs. 10 per hour.

For hiring by the day outside port limits, *viz.*, from 6 A.M. to 6 P.M., Rs. 50. For every hour under way before 6 A.M. or after 6 P.M., Rs. 8 per hour.

If when under daily hire steam be used for any part of a day less than six hours, the minimum charge shall be Rs. 30 and Rs. 5 for every additional hour when under way up to 6 P.M.

When laying at anchor without steam on engines Rs. 10 per day of 24 hours.

7. The following are the rates of freight charged on different descriptions of goods :—

	(a) For a case of wine, rum, spirits, aerated waters, oilman's stores, cask of beer not exceeding two cubic feet in measurement.		(b) For a maund of goods in bags.		(c) Furniture and other light goods per cubic foot.		Specie (for Rs. 1,000 or part thereof).	
	From Chittagong. Up.	From Rangamati. Down.	From Chittagong. Up.	From Rangamati. Down.	From Chittagong. Up.	From Rangamati. Down.	From Chittagong. Up.	From Rangamati. Down.
1	2	3		5	6	7	8	9
	As. P.	As. P.	As. P.	As. P.	As. P.	As. P.	As.	As.
To Chittagong ...	.....	6 0	.....	2 0	...	0 6	...	...
„ Lamboor Hat	0 6	5 6	0 3	1 9	0 6	0 6	4	12
„ Bhandarjuri	1 0	5 0	0 6	1 6	0 6	0 6	5	11
„ Sylock ...	2 0	4 0	0 9	1 3	0 6	0 6	6	10
„ Chandraghona	3 0	3 0	1 0	1 0	0 6	0 6	8	8
„ Kaptai ...	4 0	2 0	1 6	0 6	1 0	1 0	12	4
„ Rangamati ...	6 0	.....	2 0	.....	1 0	1 0	1	...

(a) For every two cubic feet or fraction thereof exceeding two cubic feet, the same freight will be charged.
(b) Half the rate will be charged for every half maund or part thereof.
(c) Matches, gunpowder, explosives or acids will not be carried unless declared, and will be charged the rates in column 1 and carried on deck at shipper's risk.

8. If space be available, animals will be carried at the following rates :—

	Rs. A.	
For each horse	10 0	to Rangamati or *vice versâ*.
Ditto cow	2 0	
Ditto sheep or goat	0 4	(half rates up to Chandraghona from or to Chittagong).

9. Country surangas, boats or dug-outs will be towed up or down when convenient and charged at three annas per maund of their carrying capacity. The legitimate crews of such vessels will not be charged for, but their passengers will be charged third-class passenger fares for the distance travelled.

10. Persons wishing to ship goods at Ballantine's Ghat should give at least six hours' previous notice of the number and weight or cubic contents of the packages which they intend to ship. They may deposit the freight, and preference will be given to those who make such deposits. If, after notice has been given and deposit paid, all available space should be taken up by Government stores or sepoys, the deposit will be refunded unless the shipper prefers to have the cargo carried at the succeeding trip.

11. The above rates of freight do not include charges for shipping and landing. The former must be carried out by shippers or their agents at their own risk and cost. If within six hours after the arrival of the steamer at Chittagong or Rangamati, a shipper fails to take delivery of his cargo, it will be landed and kept in the godown at these places, and a charge of half-an-anna will be made for landing every maund of cargo or package. Godown-rent of 6 pies per maund per day will also be charged, if delivery is not taken within two days from the time of landing.

12. Applications for passage, freight, and information respecting the movements, etc., of the steamer must be made to the clerk on board, who will receive all passage-money and freight and grant tickets and receipts, and will be responsible for the payment of all fares and freight.

13. Any complaints should be made to the Port Officer, Chittagong, who will enquire thereinto.

14. The Port Officer, Chittagong, is responsible for the upkeep, equipment, and movements of the Government steamer. He will see that the rules and rates sanctioned by Government are adhered to; and all applications for the hire of the steamer should be addressed to that officer for disposal subject to the approval of the Divisional Commissioner.

The 29th July 1902.

No. 100Marine.—Mr. J. J. Page, late Acting Branch Pilot, retired from the service with effect from the afternoon of the 9th June 1902.

D. B. HORN,
Offg. Secy. to the Govt. of Bengal.

SUBORDINATE CIVIL SERVICE.

No. 3241A.

No. 3115A.—The 25th July 1902.—Babu Ananta Mohan Ray, substantive *pro tempore* Sub-Deputy Collector, Bhadrak, Balasore, is vested with the powers of a Deputy Collector for the trial of rent and other suits under Act X of 1859.

Balasore.

No. 3170A.—The 28th July 1902.—Babu Jitendra Nath Sircar, substantive *pro tempore* Sub-Deputy Collector, Bhagalpur, is transferred to the head-quarters station of the Monghyr district.

Bhagalpur. Monghyr.

No. 3202A.—The 29th July 1902.—Mr. J. C. Lloyd, Sub-Deputy Collector, is posted to the head-quarters station of the Ranchi district.

Ranchi.

No. 3216A.—The 29th July 1902.—Maulvi Abdul Aziz, Sub-Deputy Collector, Gobindpur, Manbhum, is allowed leave for one month, under article 291 of the Civil Service Regulations, in extension of the leave granted to him under the order of the 14th June 1902.

Manbhum.

No. 3225A.—The 29th July 1902.—Under the authority vested in him by section 357, sub-section (2) of the Code of Criminal Procedure, Act V of 1898, the Lieutenant-Governor empowers Babu Tarini Prasad Varma, substantive *pro tempore* Sub-Deputy Magistrate, Siwan, Saran, to take down evidence in criminal cases in the English language.

Saran.

C. E. BUCKLAND,
Chief Secy. to the Govt. of Bengal.

SUBORDINATE EDUCATIONAL SERVICE.

No. 3185A.—The 28th July 1902.—The following promotions are sanctioned in the Subordinate Educational Service:—

Promoted to class I.

Babu Becharam Nandi, with effect from the 6th July 1902, *vice* Babu Rajani Kanta Ghosh, retired.

Promoted to class II.

„ Jadu Nath Chukerbertty, with effect from the 6th July 1902, *vice* Babu Becharam Nandi.

Maulvi Mohammed Azizul Huq, M.A., B.L., with effect from the 13th July 1902, *vice* Babu Hari Nath Sen, deceased.

W. C. MACPHERSON,
Offg. Secy. to the Govt. of Bengal.

REGISTRATION DEPARTMENT.

No. 1476P.—The 25th July 1902.—Maulvi Syud Abool Burkat, Rural Sub-Registrar of Lalganj, in the district of Muzaffarpur, is appointed to be Rural Sub-Registrar of Aurangabad, in the district of Gaya.

Muzaffarpur. Gaya.

No. 1477P.—The 25th July 1902.—Maulvi Shah Mahomed Karim, Rural Sub-Registrar of Aurangabad, in the district of Gaya, is appointed to be Rural Sub-Registrar of Lalganj, in the district of Muzaffarpur.

Gaya. Muzaffarpur.

C. E. BUCKLAND,
Chief Secy. to the Govt. of Bengal.

NOTIFICATION—No. 1521P.

The 28th July 1902.—It is hereby notified for general information that the Government sanctions the permanent retention of the Sub-Registry Office at Gop, in the district of Puri, which was opened as an experimental measure for one year under Notification No. 440P., dated the 6th February 1900, and retained for a further period of one year under Notification No. 137P.D., dated the 18th May 1901.

Puri.

C. E. BUCKLAND,
Chief Secy. to the Govt. of Bengal.

JAIL DEPARTMENT.

No. 8761, dated Calcutta, the 23rd July 1902.—Assistant Surgeon Mohendra Kumar Chuckerbutty made over charge of the Dinajpur Jail to the District Magistrate on the afternoon of the 23rd May 1902.

Dr. J. C. Gillmon received charge of the Dinajpur Jail on the forenoon of the 24th May 1902.

M S. EMERSON,
for *Inspector-General of Jails, Bengal,*

CIVIL MEDICAL DEPARTMENT, BENGAL.

No. 7567.—The 28th July 1902.—Civil Medical Department Notification No. 2255D, dated the 16th July 1902, appointing Assistant Surgeon Hari Nath Ghosh to the Ghatal subdivision and dispensary in the Midnapore district, is cancelled.

No. 7568.—The 28th July 1902.—Civil Medical Department Notification No. 2251D, dated the 16th July 1902, appointing Assistant Surgeon Mohendra Nath Das to the Rampur Boalia Dispensary, Rajshahi, is cancelled.

R. D. MURRAY, M.D., LIEUT.-COL, I.M.S.,
For *Inspector-General of Civil Hospitals, Bengal.*

EDUCATION DEPARTMENT, BENGAL.

Subordinate Educational Service.

The 20th July 1902.—Babu Sarat Chandra Bose, Assistant Master, Hare School (class VIII), is granted leave of absence, under Article 306 (*b*) of the Civil Service Regulations, for 20 days, with effect from the 21st April 1902.

The 21st July 1902.—Babu Man Mohan Chandra, an Assistant Master of the Birbhum Zilla School (class V), is granted leave of absence for 24 days, under Article 306 (*b*) of the Civil Service Regulations, with effect from the 8th July 1902, or such subsequent date as he may have availed himself of it.

Babu Radhika Mohan Chaudhari, M A., is appointed to act as an Assistant Master of the Birbhum Zilla School and in class VIII of the Subordinate Educational Service, during the absence, on leave, of Babu Man Mohan Chandra.

The 23rd July 1902.—The following arrangements are sanctioned, with effect from the 1st August next:—

Babu Raksha Kali Sil, Head Clerk of the Calcutta Madrasah (substantive *pro tempore* in class IV), to be Head Clerk in the Office of the Inspector of Schools, Presidency Division, *vice* Babu Surendra Nath Banerjea, transferred.

„ Surendra Nath Banerjea, Head Clerk in the Office of the Inspector of Schools, Presidency Division (class IV), to be Head Clerk of the Calcutta Madrasah, *vice* Babu Raksha Kali Sil, transferred.

This cancels the orders of the 25th May 1902, appointing, on probation for six months, Babu Radhika Prosad Lahiry, Clerk and Deputy Keeper of the Government Art Gallery, to be Head Clerk in the Office of the Inspector of Schools, Presidency Division, and Babu Surendra Nath Banerjea, Head Clerk in the Office of the Inspector of Schools, Presidency Division, to be Clerk and Deputy Keeper of the Government Art Gallery.

The 28th July 1902.—Babu Gobinda Chandra Chakravarti, B.A., a Sub-Inspector of Schools under the District Board of Chittagong, was granted by the Board privilege leave for one month, with effect from the 15th June 1902.

Babu Parameswar Singh, a Sub-Inspector of Schools under the District Board of Saran, has been granted leave on medical certificate for two months, with effect from the 3rd June 1902.

The 29th July 1902.—Babu Krishna Lal Sadhu, M.A, Assistant Head Master of the Rangpur Training School (class V), was absent on leave, under Article 370 of the Civil Service Regulations, from the 1st to the 15th April 1902, both days inclusive.

A. PEDLER,
Director of Public Instruction, Bengal.

List of candidates who have passed the Examination for Sanskrit Titles, held in February 1902, in accordance with the Resolution of Government of Bengal, dated the 30th January 1878, together with the titles and rewards conferred on them.

No.	Names of Candidates in order of merit.	Titles conferred.	Government rewards to pupils.	Private rewards to pupils.	Names of teachers.	Place of instruction.	Government rewards to teachers.	Private rewards to teachers.	Remarks.
1	2	3	4	5	6	7	8	9	10
			KAVYA OR SANSKRIT LITERATURE.						
	First Division.		Rs.						
1	Annada Charan Bhattacharyya.	Kavyatirtha	100	Jagan Mohan Mukerji Prize of Rs. 50.	Asutosh Smritiratna ...	Piljang, Khulna...	50	...	
2	Ram Chandra Bhattacharyya	Ditto	25	Raja Krishna Nath Ray stipend of Rs. 4 a month for one year.	Pramatha Nath Tarkabhushan.	Calcutta ...	...	Raj Krishna Ray's Prize of Rs. 50.	
	Second Division.								
1	Kali Kanta Siromani ..	Kavyatirtha	25	.....	Rovati Mohan Kavyaratna	Kotwalipar, Faridpur.	100	...	
1	Priyanath Bhattacharyya ...	Ditto	20	.....	Sasibhushan Vidyanidhi	Raina, Burdwan	...	...	
3	Mahendra Nath Bhattacharyya.	Ditto	20	.....	Yajnesvar Kavyatirtha ...	Konnagar, Hooghly.	...	Burdwan Prize of Rs. 45.	
4	Ramranjan Bhattacharyya ..	Ditto	...	Darbhanga Prize of Rs 19.	Kamal Krishna Smritibhushan, Bhatpara, 24-Parganas.	Bhatpara ...	..	..	*Reserved for Orissa being an inhabitant of Krishnapur Sasan, Post Office Kuanpal, district Cuttack.
5	Kasi Nath Das	Ditto	...	Gouri Syam Prize of Rs. 40.*	Professors, Sanskrit College.	Calcutta ...	...	...	
6	Sarat Chandra Mukhopadhyaya.	Ditto	...	.....	Ditto ...	Do. ...	...	...	
7	Yatindra Mohan Bhattacharyya.	Ditto	...	.....	Purnachandra Vedantochunchu.	Berhampur, Murshidabad.	...	...	
8	Sarat Kumar Bhattacharyya	Ditto	...	.....	Krishnaratna Nyayaratna	Kaligram, Malda	...	...	
8	Banamali Chakravarti	Ditto	...	.....	Revatimohan Kavyaratna	Kotwalipar, Faridpur.	...	...	
10	Surendra Nath Chakravarti	Ditto	...	.....	Surya Kumar Tarkabhusan	Sanskrit Tôl, Mulajore, 24-Parganas.	...	...	
11	Yogindra Nath Mukhopadhyaya.	Ditto	...	.....	Sasi Kumar Kavyatirtha...	Haribar Vidyalaya, Kotwalipar, Faridpur.	50	...	
12	Gopal Chandra Sarvajna .	Ditto	...	.....	Revati Mohan Kavyaratna	Kotwalipar, Faridpur.	...	...	
13	Ram Swarup Chaturvedi ...	Ditto	..	.....	Sasinath Jha	Dharma Samaj School, Muzaffarpur.	200	...	
14	Dharmaraj Ojha ...	Ditto	...	.....	Raghunandan Tripathi ...	Promod Vidyalaya, Chapra.	...	...	
15	Gangavishnu Misra ...	Ditto	...	.....	Sasinath Jha	Dharma Samaj School, Muzaffarpur.	...	...	
15	Yaminiranjan Sen Gupta ...	Ditto	...	.....	Sasi Kumar Kavyatirtha	Haribar Vidyalaya, Kotwalipar, Faridpur.	....	...	
17	Rajani Kumar Bhattacharyya.	Ditto	...	.....	Yajneswar Kavyatirtha ...	Konnagar, Hooghly.	...	...	
17	Asutosh Bhattacharyya ..	Ditto	...	.....	Yadaveswar Tarkaratna ...	Rangpur ...	50	...	
19	Kali Prasanna Bhattacharyya	Ditto	...	.....	Sasikumar Kavyatirtha ...	Haribar Vidyalaya, Kotwalipar, Faridpur.	...	...	
19	Loknath Dwivedi ...	Ditto	...	.....	Rudranarayan Saranghi ...	Syam Chandra Tôl, Nilgiri.	...	...	
21	Sriprasanna Thakur ...	Ditto	...	.....	Lalit Mohan Kavisagar ...	Kavindra College, Gcila.	100	...	
21	Joy Krishna Misra ...	Ditto	...	.....	Private	Nil.	...	...	
	Prasanna Kumar Kavibhushan.	Ditto	...	.....	Do.	Nil.	...	...	
24	Basudev Misra	Ditto	...	.....	Biswanath Mahapatra ...	Sanskrit School, Puri.	...		
25	Mati Lal Mazumdar ...	Ditto	...	.....	Private	Nil.	...	...	
26	Yogesa Chandra Upadhyaya	Ditto	...	.....	Ramsaran Vidyavagisa ...	Jubilee Tôl, Berhampur.	2 0	...	
27	Lalit Mohan Bagchi ...	Ditto	...	.....	Devendranath Smritiratna	Samudragar, Burdwan.	...	...	
27	Haripada Bhattacharyya ...	Ditto	...	.....	Digambar Tarkasiddhanta	Bhatpara, 24-Parganas.	50	...	
29	Sarat Chandra Bhattacharyya	Ditto	...	.....	Ramsaran Vidyavagisa ...	Jubilee Tôl, Berhampur.	...	...	
30	Barendra Krishna Adhikari, B.A.	Ditto	...	.....	Rudranarayan Kaviratna	Basantia, Midnapur.	...	...	
31	Narayan Chandra Bhattacharyya.	Ditto	...	.....	Digambar Tarkasiddhanta	Bhatpara, 24-Parganas.	...	...	
			VYAKARAN OR SANSKRIT GRAMMAR.						
			A, *i.e.*, PANINI.						
	Second Division.								
1	Manomohan Thakur ...	Vyakarantirtha.	20	.. ..	Satyadev Misra ..	Bhachya, Darbhanga.	...	...	
2	Basudev Thakur ...	Ditto	...	.....	Raghunandan Misra ...	Sanskrit School, Madhubani, Darbhanga.	...	...	

No.	NAMES OF CANDIDATES IN ORDER OF MERIT.	Titles conferred.	Government rewards to pupils.	Private rewards to pupils.	Names of teachers.	Place of instruction.	Government rewards to teachers.	Private rewards to teachers.	REMARKS.
1	2	3	4	5	6	7	8	9	10
				VYAKARAN OR SANSKRIT GRAMMAR—*concld.*					
	Second Division—concld.		Rs.	A, *i.e.*, PANINI.					
3	Bansidhar Upadhyaya ...	Vyakarantirtha.	...	.....	Radhavar Vajpeyee ...	Gurhatta, Patna,	...	...	
4	Devi Prasad Misra ...	Ditto	...	.....	Haribar Sarma ...	Mirchaiganj, Patna.	...	...	
5	Turanta Lal Jha ..	Ditto	...	.....	Raghunandan Misra ...	Sanskrit School, Madhubani, Darbhanga.	...	...	
6	Kulasekhar Misra ...	Ditto	...	.....	Ganapat Misra .	Barnadharmopa yogini Pathsala, Arrah.	50	...	
7	Kapileswar Jha	Ditto	...	.....	Narayan Sastri ..	Gopal Mundir Benares City.	...	...	
8	Gopal Das Tripathi ...	Ditto	...	.....	Ditto ...	Ditto ...	...	...	
	First Division.			B, *i.e.*, SANKSHIPTASAR.					
1	Nitya Gopal Kavyatirtha ..	Vyakarantirtha.	50	... ..	Ramsaran Vidyavagisa ...	Jubilee Tôl, Berhampur.	...	...	
	Second Division.			D, *i.e*, KALAP.					
1	Ramesa Chandra Vedajna ...	Vyakarantirtha.	...	.....	Chandra Kanta Tarkaratna	Machua Khal, Tippera.	...	...	
2	Tarakanta Chakravarti ...	Ditto	...	.. ...	Revatimohan Kavyaratna	Kotwalipar, Faridpur.	...	...	
3	Harendranath Chakravarti...	Ditto	...	... ..	Lalitmohan Kavisagar ...	Kavindra College Goila.	...	...	
4	Mathuranath Bhattacharya	Ditto	...	.....	Ditto ...	Ditto	...	...	
4	Chandra Kumar Bhattacharya.	Ditto	...	.....	Chandra Kanta Tarkaratna	Machua Khal, Tippera.	...	...	
	First Division.			E, *i.e.*, MUGDHABODHA.					
1	Panchanan Kaviratna ...	Vyakarantirtha.	50	.....	Chandidas Nyayatarkatirtha.	Binnafair, Mymensingh.	...	...	
	Second Division.			PURAN OR HINDU MYTHOLOGY.					
1	Tarapada Kavyati tha ...	Purantirtha...	25	.....	Devendranath Smritiratna	Samudragar, Burdwan.	...	...	
2	Lalit Mohan Goswami ...	Ditto	...	.....	Yadaveswar Tarkaratna ...	Rangpur ...	...	...	
				SMRITI OR HINDU LAW.					
	Second Division.			A, *i.e*, NAVYA SMRITI.					
1	Ramamrita Kavytirtha ..	Smritiitirtha	25	Raja Loknath Ray stipend of Rs. 6 a month. Parvati Devi Prize of Rs. 50.	Harinath Vedantavagisa ...	Bijaya Chatus pathi, Burdwan.	50	...	
2	Devnath Kavyatirtha ...	Ditto	20	Prasanna Kumar Tagore stipend of Rs. 7 a month.	Asutosh Smritiratna ...	Piljang, Khulna	...	...	
3	Prasanna Kumar Bhattacharyya.	Ditto	...	Burdwan Prize of Rs. 40.	Guruchoran Vidyabhushan.	Bally, Howrah ...	...	Kshetramoni Devi Prize of Rs. 50.	
4	Sasisekhar Bhattacharyya	Ditto	...	.....	Harinath Vedantavagisa ...	Bijaya Chatuspathi, Burdwan.	...		
				DARSANA OR HINDU PHILOSOPHY.					
	Second Division.			A, *i.e.*, NAVYA NYAYA ও ANUMAN KHANDA.					
1	Dayal Krishna Bhattacharyya	Tarkatirtha	20	Jagan mohan Mukorji Prize of Rs. 50.	Herambanath Tarkatirtha	Basail, Dacca ...	...	...	
2	Molakram Pandit ...	Ditto ...	...	Burdwan Prize of Rs. 40.	Sib Chandra Sarvabhauma	Sanskrit Tol, Mulajore, 24-Parganas.	...	...	
	Second Division.			B, *i.e.*, NAVYA NYAYA ও SAVDA KHANDA.					
1	Iswar Chandra Bhattacharyya	Tarkatirtha	100	Hara Kumar Tagore Keyur and Darbhanga stipend of Rs. 13 a month.	Joynarayan Tarkaratna ...	Navadwipa, Nadia	...	Raj Krishna Ray Prize of Rs. 50.	
2	Asutosh Bhattacharyya ...	Ditto	...	Hara Kumar Tagore Prize of Rs. 25.	Professor, Sanskrit College	Sanskrit College, Calcutta.	...	...	

No.	NAMES OF CANDIDATES IN ORDER OF MERIT.	Titles conferred.	Government rewards to pupils.	Private rewards to pupils.	Names of teachers.	Place of instruction.	Government rewards to teachers.	Private rewards to teachers.	REMARKS.
1	2	3	4	5	6	7	8	9	10
				E, *i.e.*, SANKHYA, PHILOSOPHY.					
	Second Division.		Rs.						
1	Sitanath Vyakarantirtha ...	Sankhyatirtha	25	Dewan Krishna Kanta Nandi stipend of Rs. 7 a month.	Haranath Sastri ...	25 Shampuker Street, Calcutta.	...	Burdwan Prize of Rs. 45.	
2	Rajani Kanta Bhattacharyya	Ditto	.25	Raja Harinath Ray stipend of Rs. 5 a month.	Sitanath Vedanta Sastri...	Chinsura, Hooghly.	...	Harakumar Tagore Prize of Rs. 45.	
3	Barada Charan Sastri ...	Ditto	...	Parvati Devi Prize of Rs. 50.	Priyanath Tatwaratna ...	Khalispura, Benares City.	...	...	
				JYOTISH.					
	First Division.								
1	Ramyatna Ojha ...	Jyotishtirtha	...	.....	Dinanath Misra ...	Sanskrit College, Benares.	...	...	

CALCUTTA,
The 28th July 1902.

A. PEDLER,
Director of Public Instruction, Bengal.

MEMORANDUM.

UNIVERSITY ENTRANCE EXAMINATION.

PRIVATE STUDENTS.

1. Private students are those who do not appear from any school, or who have been transferred from one school to another after the 31st August without the consent of the Inspector.

2. The term "Private students" includes School Masters.

3. Private students must appear at the test examination of any one of the undermentioned schools on dates to be fixed by Head Masters:—

1. Ravenshaw Collegiate School (with the permission of the Principal of the College).
2. Balasore Zilla School.
3. Balasore Christian Mission High English School.
4. Bhadrak High English School.
5. Lakhannath High English School.
6. P. M. Academy.
7. Cuttack Mission High English School.
8. Cuttack Town Victoria High English School.
9. Jajpur High English School.
10. Kendrapara High English School.
11. Puri Zilla School.
12. Khurda High English School.
13. Baripada High English School.
14. Dhenkanal High English School.

4. Every private candidate must satisfy the following conditions:—

(*a*) That he has not failed at the test examination of any Entrance school in the current session.

(*b*) That he has not failed to gain promotion to the first class of any Entrance school at the results of the annual examination of the second class in the last session.

(*c*) That he has left the school in which he last read with a transfer certificate, or (in case of a failed student) is in possession of the Registrar's receipt.

5. Every private candidate must pay a fee of Rs. 2 to the Head Master of the school at which he is to appear for the examination.

6. He must arrange for his identification to the officer conducting the test examination, and he should satisfy the Head Master as to his character, if necessary.

7. The Head Masters of the abovenamed schools are requested to sign the application forms of eligible candidates having a reasonable probability of success at the final examination, and forward the same to this office for countersignature *in time*. Private candidates should make their own arrangements to remit their examination fees and application forms to the Registrar of the Calcutta University.

CUTTACK,
The 17th July 1902.

JAGAT BANDHU LAHA,
Inspector of Schools, Orissa Division.

ORISSA DIVISION AND THE ORISSA TRIBUTARY MAHALS.

OFFICE MEMORANDUM OF THE INSPECTOR OF SCHOOLS, ORISSA DIVISION.

Rules for appearing at the F.A. and B.A. Examinations in 1902 for candidates from the Orissa Division and the Orissa Tributary Mahals who are not students of any affiliated institution.

DEPUTY INSPECTORS OF SCHOOLS, Sub-Inspectors of Schools and *bonâ fide* teachers of recognised English schools who have served as such for the full period of two academical years, or for a term of six months after an examination of the same class last held by the University in the case of those only who were admitted to a former examination of that class, will be admitted to the abovementioned examinations. All applications from school masters should be accompanied by certificates of length of service from the Secretaries of the schools in which they are employed, and should reach this office not later than the 5th January 1903. The application of a school master for permission to appear at the F.A. or B.A. Examination should be signed by him in the presence of the Secretary or a member of the Managing Committee of the school in which he is employed. The application should be forwarded to the office of the Inspector of Schools, Orissa Division, for countersignature, together with the Registrar's receipt to prove, if this be the case, that the candidate has appeared at the examination in a previous year, and the certificate in proof of his having passed the Entrance or F.A. Examination, as the case may be. Such papers will be sent back to him (the candidate), who will have to send them, together with the examination fee, to the Registrar of the University direct.

2. Candidates should read carefully the form of the certificate which the Inspector of the Division will sign, and should be careful to supply all information and documents required, including the Registrar's receipt, in the case of those who have been admitted to a former examination of the same class, without which the Inspector must decline to sign the certificate applied for.

3. By *bonâ fide* teachers of schools are to be understood teachers who hold regularly paid appointments in English schools teaching at least the Middle English course.

CUTTACK,
The 17th July 1902.

JAGAT BANDHU LAHA,
Inspector of Schools, Orissa Division.

TREASURY NOTICES.

UNCOVENANTED DEPUTY COLLECTOR BABU MADHAV LAL is hereby placed in charge of the Bankura Treasury, *vice* Babu Basanta Kumar Raha, with retrospective effect from the 3rd July 1902, and is authorized to draw bills on other Treasuries.

R. CARSTAIRS, *Commissioner.*

COMMR 'S OFFICE, BURDWAN DIVN., CHINSURA, *the 22nd July 1902.*

UNCOVENANTED DEPUTY COLLECTOR BABU PROSANNA KUMAR KARFORMA has been placed in charge of the Khulna Treasury and authorised to draw bills on other Treasuries.

B. CHAKRAVARTI, for *Commissioner.*

COMMR.'S OFFICE, PRESY. DIVN., CALCUTTA, *the 25th July 1902.*

Sheriff's Office, the 23rd July 1902.

NOTICE is hereby given that the Fourth Criminal Sessions of the year 1902 of the High Court of Judicature at Fort William in Bengal, for the Town of Calcutta and Factory of Fort William, and the places subordinate thereto, will be held at the Court-house, in the Town of Calcutta, on Monday, the eighteenth day of August next, at 11 o'clock in the forenoon, and thence forward from day to day until the said Sessions be over. And it is hereby proclaimed that all persons who are to prosecute any of the prisoners to be brought up for trial at the said Sessions be present then and there to prosecute.

H. M. RUSTUMJEE, *Sheriff.*

সরিফ আফিস, সন ১৯০২ সাল তারিখ ২৩শে জুলাই।

সকলকে সমাচার দেওয়া যাইতেছে যে সুবা বাঙ্গালার কোট উইলিয়ম দুর্গের অধীন শহর কলিকাতার ও অন্যান্য স্থানের ফৌজদারী বিচার নিষ্পত্তি জন্য আগামী সন ১৯০২ সালের ১৮ই আগষ্ট সোমবার বেলা ১১ ঘটিকার সময় এবং যে পর্য্যন্ত সেশিয়ানের কার্য্য শেষ না হয় প্রতিদিন উক্ত সময়ে কলিকাতার হাইকোর্টের আপন আদালত ঘরে সন ১৯০২ সালের চতুর্থ ক্রিমিনেল সেশিয়ান বসিবেক এবং এতদ্দ্বারা প্রচার করা যাইতেছে যে, যে সকল ব্যক্তি কোন কয়েদির বিরুদ্ধে ফৌজদারী মিছিল করিবেক তাহারা উক্ত স্থানে উক্ত সময়ে হাজির থাকিয়া মোকদ্দমা করে ইতি।

এইচ্, এম্, রস্তমজী, সরিফ।

NOTIFICATIONS OF THE BOARD OF REVENUE.

NOTICE.

No. 1963B.

THE HON'BLE MR. BOURDILLON, C.S.I., *Member in charge.*

IT is hereby notified for general information that rowanas for salt consigned to districts in the Orissa Division by the route of the Bengal-Nagpur Railway *vid* the Shalimar salt pass-station should henceforth be surrendered to the officer in charge of that station, who should make them over to the Covenanted Deputy Collector of Howrah, through the proper channel, for return to the Board's office.

2. The practice of returning such rowanas to the consignors of salt after endorsement at Shalimar, in order that they may be sent by post to the Customs officers of the importing districts in the Orissa Division, will henceforth be discontinued.

By order of the Board of Revenue, L. P.,

MISC. REVENUE DEPT.,
SALT ROWANA BRANCH, CALCUTTA,
The 28th July 1902.

H. WHEELER,
Secretary.

No. 1994B.

NOTICE is hereby given that the Ninth Sale of Opium, the Provision of 1900-1901, will be held at the Government Opium Sale-room, No. 2 Bankshall Street, on Monday, the 1st September 1902, at 11 A.M., and will comprise 4,000 chests, viz.—

		Chests.
Opium manufactured at the Patna Factory, consisting of	...	2,000
Opium manufactured at the Ghazipur Factory, consisting of	...	2,000
Total	...	4,000

2nd.—The general conditions of the sale now advertised will be the same as usual. They may be ascertained by reference to the Notification issued on the 19th November 1901, and published in the *Government* and *Exchange Gazettes*, or on personal application at the office of the Board of Revenue.

3rd.—The latest dates for deposit and clearance will be the 6th and 16th September 1902, respectively, that is to say, no Bank of Bengal Receipts, Government Promissory Notes or other Public Securities that may be tendered for deposit in redemption of Promissory Notes given by purchasers in the sale-room will be received after 1-30 P.M. of Saturday, the 6th September 1902, and no Bank of Bengal Receipts in full payment of lots will be accepted after 3-30 P.M. of Tuesday, the 16th September 1902.

4th.—In addition to the quantity above advertised for sale, the following quantities, more or less, of the Opium manufactured at the Patna and Ghazipur Factories will be brought to sale down to December next on or about the dates specified below. The Board

of Revenue, however, reserve to themselves the right of altering these dates, should circumstances render it expedient to do so :—

DATES.	Manufactured at the Patna Factory ; about chests.	Manufactured at the Ghazipur Factory ; about chests.	Total ; about chests.
On or about Monday, 29th September 1902 ...	2,000	2,000	4,000
On or about Monday, 3rd November ,, ...	2,000	2,000	4,000
On or about Monday, 1st December ,, ...	2,000	2,000	4,000
Total ...	6,000	6,000	12,000

By order of the Board of Revenue, L. P.,

H. WHEELER, *Secretary.*

BOARD OF REVENUE, L. P., CALCUTTA, *the 29th July 1902.*

No. 1716B.

NOTICE is hereby given that the Eighth Sale of Opium, the Provision of 1900-1901, will be held at the Government Opium Sale-room, No. 2 Bankshall Street, on Monday, the 4th August 1902, at 11 A.M., and will comprise 4,000 chests, viz :—

	Chests.
Opium manufactured at the Patna Factory, consisting of	2,000
Ditto ditto at the Ghazipur Factory, consisting of ...	2,000
Total ...	4,000

2nd.—The general conditions of the sale now advertised will be the same as usual. They may be ascertained by reference to the Notification issued on the 19th November 1901, and published in the *Government* and *Exchange Gazettes*, or on personal application at the Office of the Board of Revenue.

3rd.—The latest dates for deposit and clearance will be the 9th and 19th August 1902, respectively, that is to say, no Bank of Bengal Receipts, Government Promissory Notes, or other public securities that may be tendered for deposit in redemption of Promissory Notes given by purchasers in the sale-room will be received after 1-30 P.M. of Saturday, the 9th August 1902, and no Bank of Bengal Receipts in full payment of lots will be accepted after 3-30 P.M. of Tuesday, the 19th August 1902.

4th.—In addition to the quantity above advertised for sale, the following quantities, more or less, of the opium manufactured at the Patna and Ghazipur Factories will be brought to sale down to December next, on or about the dates specified below. The Board of Revenue, however, reserve to themselves the right of altering these dates, should circumstances render it expedient to do so :—

DATES.	Manufactured at the Patna Factory ; about chests.	Manufactured at the Ghazipur Factory ; about chests.	Total ; about chests.
On or about Monday, 1st September 1902 ...	2,000	2,000	4,000
On or about Monday, 29th September ,, ...	2,000	2,000	4,000
On or about Monday, 3rd November ,, ...	2,000	2,000	4,000
On or about Monday, 1st December ,, ...	2,000	2,000	4,000
Total ...	8,000	8,000	16,000

By order of the Board of Revenue, L. P.,

H. WHEELER, *Secretary.*

BOARD OF REVENUE, L. P., CALCUTTA, *the 1st July 1902.*

Statement showing the Quantity of Salt (Private Property) in Bonded Warehouses and Afloat on the River Hooghly on the 15th day of July 1902, and Transactions during the half-month from the 1st to the 15th July 1902.

DESCRIPTION OF SALT.	IN BONDED WAREHOUSES IN CALCUTTA.				Quantity afloat.	Grand Total.	TRANSACTIONS DURING HALF-MONTH FROM THE 1ST TO THE 15TH JULY 1902, INCLUSIVE.			
	In private golas.	In Sulkea Government golas.	In Kidderpore Dock Government golas.	Total.			Quantity on which duty has been paid.	Manifested quantity arrived in the Port of Calcutta.	Deliveries from shipboard for consumption and for inland bonded warehouses.	Deliveries from bonded warehouses for consumption and for inland bonded warehouses.
1	2	3	4	5	6	7	8	9	10	11
		Mds.	Mds.	Mds.	Mds.	Mds.	Mds.	Mds.	Mds.	Mds.
United Kingdom—										
Liverpool and other Panga salt.	.....	5,97,293	8,02,785	14,00,078	1,54,954	15,55,032	1,30,760	2,79,299	1,25,243	87,450
Other European countries—										
Hamburg salt	.....	1,17,126	7,051	1,24,177	43,947	1,68,124	45,125	43,947	.....	36,600
Aden and Red Sea—										
Aden salt	.....	3,10,738	25,286	3,36,024	.....	3,36,024	42,227	.....	.....	61,165
Salif salt	.....	2,89,435	.....	2,89,435	.....	2,89,435	72,508	194	31,068	41,612
Saliff rock salt	.....	10,615	.....	10,615	.....	10,615	560	.....	.....	1,000
Mawyah salt	.....	67,984	45,000	1,12,984	.....	1,12,984	54,365	721	59,890	13,650
Muscat and Persian Gulf—										
Muscat, Lingah and Hanjam salts.	.....	1,38,651	.....	1,38,651	.....	1,38,651	1,000	1,40,251	.....	1,600
Ditto ditto Rock salt.	.....	6,917	.....	6,917	.....	6,917	.....	5,441	.....	.....
British India—										
Bombay salt	.....	1,61,582	.....	1,61,582	62,977	2,24,559	33,353*	99,486	4,100	17,691
Madras salt	.....	.....	.....	.....	.....	.....	.....	.....	.....	.....
Coconada salt	.....	.....	.....	.....	.....	.....	.....	.....	.....	.....
Vizagapatam salt	.....	.....	.....	.....	.....	.....	.....	.....	.....	.....
Other places—										
Madagascar salt	.....	.....	.....	.....	.....	.....	2,270	.....	.....	900
Port Said	.....	1,11,889	.....	1,11,889	.....	1,11,889	.....	.....	.....	.....
Total ...	.....	18,12,230	8,80,122	26,92,352	2,61,678	29,54,230	3,80,708	5,69,342	2,20,241	2,61,668

* This quantity includes 31,078 maunds and 30 seers Bombay Karkach salt on which duty was paid at Bombay.

By order of the Board of Revenue, L. P.,

L. F. MORSHEAD, *Offg. Collector of Customs.*

CALCUTTA CUSTOM HOUSE, *the 23rd July 1902.*

ELECTION OF MUNICIPAL COMMISSIONERS.

NOTIFICATION.

IT is hereby notified for general information that at a bye-election held on Saturday, the 5th July 1902, under section 27 of the Bengal Municipal Act, III of 1884, as modified up to 1st November 1896, Babu Hrishi Kesh Chatterjee was duly elected a Commissioner of Ward No. III of the Burdwan Municipality, *vice* Mr. Srinath Dutt, resigned.

R. CARSTAIRS, *Commissioner.*

COMMR.'S OFFICE, BURDWAN DIVN., CHINSURA, *the 24th July 1902.*

NOTIFICATION.

IT is hereby notified for general information, under Rule 26 of the Municipal Election Rules, that at a bye-election held on the 10th July 1902, Babu Shyama Charan Das was duly elected, under section 27 of the Bengal Municipal Act, to be a Commissioner of the Tangail Municipality for Ward No. I, *vice* Babu Mono Mohan Haldar, deceased.

GUNGA N. ROY, *Pers. Asst.*, for *Commissioner.*

DACCA COMMR.'S OFFICE, *the 24th July 1902.*

NOTIFICATION.

IT is hereby notified for general information that a bye-election will be held on Saturday, the 13th September 1902, in Ward No. IV of the Jessore Municipality, in the district of Jessore, to elect a Commissioner for that Ward in the place of Munshi Golam, Azam, resigned.

M. FINUCANE, *Commissioner.*

COMMR.'S OFFICE, PRESY. DIVN., CALCUTTA, *the 25th July 1902.*

NOTIFICATION.

IT is hereby notified for general information that a bye-election will be held on Saturday, the 27th September 1902, in Ward No. II of the Barasat Municipality, in the district of the 24-Parganas, to elect a Commissioner for that Ward in the place of Babu Hari Nath Sen deceased.

M. FINUCANE, *Commissioner.*

COMMR.'S OFFICE, PRESY. DIVN., CALCUTTA, *the 28th July 1902.*

NOTIFICATION.

IT is hereby notified for general information, under section 21 (*b*) of the Dispensary Manual, that Babu Jogendra Nath Ghosh has been appointed a member of the Managing Committee for the Bankura Dispensary, in the district of Bankura.

R. CARSTAIRS, *Commissioner.*

COMMR.'S OFFICE, BURDWAN DIVN., CHINSURA, *the 24th July 1902.*

NOTIFICATION.

IT is hereby notified for general information that, under Rule 21 (*b*) of the Dispensary Manual, Babu Joy Gopal Ghosh has been appointed a member of the Managing Committee of the Charitable Dispensary at Tolla, in the district of Khulna, *vice* Babu Gopal Lal Pal, resigned.

M. FINUCANE, *Commissioner.*

COMMR.'S OFFICE, PRESY. DIVN., CALCUTTA, *the 25th July 1902.*

NOTIFICATION.

UNDER Rule 21 (*b*) of the Dispensary Manual, it is notified for general information that the following gentlemen have been appointed as members of the Managing Committee of the Charitable Dispensary at Khatra, in the district of Bankura:—

Babu Harish Chandra Dhabal Sahajada Deb, Zamindar, Khatra.
„ Surja Narain Chaudhuri, Pleader.
„ Kanti Chandra Banerjee, „
„ Kumud Bihary Bose, „
„ Debendra Nath Goswami, „

R. CARSTAIRS, *Commissioner.*

BURDWAN COMMR.'S OFFICE, CHINSURA, *the 26th July 1902.*

NOTIFICATION.

IT is hereby notified for general information that, in exercise of the powers conferred on me by section 41 of the Bengal Local Self-Government Act, III (B.C.) of 1885, I appoint Babus Trailokya Bandhu Chakravarti and Srish Chandra Das Gupta to be members of the Kalia Union Committee, in the district of Jessore, *vice* Babus Shyama Charan Bhattacharya and Basanta Kumar Sen Gupta, resigned.

M. FINUCANE, *Commissioner.*

COMMR.'S OFFICE, PRESY. DIVN., CALCUTTA, *the 23rd July 1902.*

PUBLIC FERRIES.

NOTIFICATION.

24-Parganas.

WHEREAS it is expedient to define the limits of the Public Ferries in the Baranagore Municipality, in the district of the 24-Parganas, it is hereby notified for general information, under section 6 (*d*) of the Bengal Ferries Act, I (B.C.) of 1885, that the limits of the North Baranagore, Kutighata, and South Baranagore Ferries on the east bank of the river Hooghly are fixed as follows :—

North Baranagore	...	From Magazine Ghat (Dakhineswar) to Colvin Ghat (Baranagore), both ghats inclusive.
Kutighata	...	From the south of Colvin Ghat to Bhaduri's Ghat, the latter inclusive.
South Baranagore	...	From the south of Bhaduri's Ghat to Paramanik Ghat, the latter inclusive.

ALIPORE,
The 12th June 1902.

C. J. STEVENSON-MOORE,
Magistrate, 24-Parganas.

The Calcutta Gazette.

WEDNESDAY, JULY 30, 1902.

PART IA.

Orders and Notifications by the Government of India, &c.

[*Reprinted from the "Gazette of India."*]

The following order, issued by the Government of India in the Home Department, is republished for general information.

C. E. BUCKLAND,
Chief Secy. to the Govt. of Bengal.

NOTIFICATION.

JUDICIAL.

Simla, the 24th July 1902.

No. 1123.—In exercise of the power conferred by section 8 of the Administrators-General and Official Trustees Act, 1902 (V of 1902), the Governor-General in Council is pleased to direct that, where a subject of His Majesty the Emperor of Japan dies in British India, and it appears that there is no one in British India, other than the Administrator-General, entitled to apply to a Court of competent jurisdiction for letters of administration of the estate of the deceased, letters of administration shall, on the application to such Court of any Consular officer of His Majesty the said Emperor, be granted to such officer on such terms and conditions as the Court may, subject to the following rules, think fit to impose, namely:—

I.—Where the deceased has left any heir or universal legatee of his own nationality only, or any heir or universal legatee qualified to enjoy the civil status of the deceased, any such Consular officer shall, on giving notice to the authority (if any) in possession of the property of the deceased, take possession and have custody of such property and shall pay the expenses of the funeral, retaining the surplus for the payment of his debts and for the benefit of the heir or universal legatee to whom it may rightly belong:

Provided, first, that such Consular officer shall immediately apply to a Court of competent jurisdiction for letters of administration, and such letters shall be delivered to him with such limitations and for such time as such Court may deem reasonable:

Provided also that where there is no such Consular officer in the locality where the decease has occurred, the authority duly empowered by law shall proceed in these acts until such a Consular officer arrives.

II.—Where the deceased has left in British India any heir or universal legatee of other nationality than his own, or any heir or universal legatee to whom the civil status of the deceased cannot be granted, the Government may determine whether the Court of competent jurisdiction shall proceed according to law, or shall confide the collection and administration, under the proper limitations, to any such Consular officer.

J. P. HEWETT,
Secy. to the Govt. of India.

Hooghly, it is hereby declared that for the above purpose a piece of land measuring, more or less, 9 chitaks of standard measurement, is required. The land is bounded on the north by Nabin Senapati's Lane, on the east by Girish Chandra Banerji's Lane, on the south by Nabin Senapati's Lane, and on the west by Nabin Senapati's Lane.

A plan of the land may be inspected in the office of the Covenanted Deputy Collector of Howrah.

This declaration is made, under the provisions of section 6 of Act I of 1894, to all whom it may concern.

No. 1845M.—The 24th July 1902.—Whereas it appears to the Lieutenant-Governor of Bengal that land is required to be taken up by Government at the expense of the Gaya Municipality for a public purpose, viz., for a trenching ground in the village of Maranpur, pargana Gaya, zilla Gaya, it is hereby declared that for the above purpose two plots of land measuring, more or less, 9 bighas 15 cottahs of standard measurement, are required. The plots of land are bounded as follows:—

Gaya.

Plot No. 1—

Bounded on the—

North, *South*, *East*, *West* —By the waste land of village Maranpur.

Plot No. 2—

Bounded on the—

North, *South* —By the waste land of village Maranpur.

East—By the plot No. 1.

West—By the pucca road from Baitarni tank.

A plan of the land may be inspected in the office of the Collector of Gaya.

This declaration is made, under the provisions of section 6 of Act I of 1894, to all whom it may concern.

No. 1849M.—The 24th July 1902.—Whereas it appears to the Lieutenant-Governor of Bengal that land is required to be taken up by Government at the expense of the Dacca Municipality for a public purpose, viz., for a cartway to Kagajitola jallah, in the village of Kagajitola, pargana Jahangirnagar, zilla Dacca, it is hereby declared that for the above purpose a piece of land measuring, more or less, 1 cottah $13\frac{8}{9}$ dhurs of standard measurement, is required. The land is bounded on the north by the land of Babu Raghu Nath Das and mirasi land of Kamaraddin and Elahi Baksha, on the south by the land of Babu Raghu Nath Das, on the east by the Sutrapur road and the land of Babu Raghu Nath Das, and on the west by the Kagajitola jallah.

Dacca.

A plan of the land may be inspected in the office of the Chairman of the Dacca Municipality.

This declaration is made, under the provisions of section 6 of Act I of 1894, to all whom it may concern.

No. 1853M.—The 24th July 1902.—Whereas it appears to the Lieutenant-Governor of Bengal that land is required to be taken up by Government at the expense of the Dacca Municipality for a public purpose, viz., for opening a mehters' passage in the village of Uttar Nababpur, pargana Jahangirnagar, zilla Dacca, it is hereby declared that for the above purpose a piece of land measuring, more or less, 1 cottah $11\frac{7}{16}$ dhurs of standard measurement, is required. The land is bounded on the north by the land of Lakhan Chandra Pal, on the south by the house of Radha Syam Pal, on the east by a mehters' passage, and on the west by Nababpur Street.

Dacca.

A plan of the land may be inspected in the office of the Chairman of the Dacca Municipality.

This declaration is made, under the provisions of section 6 of Act I of 1894, to all whom it may concern.

The Calcutta Gazette.

WEDNESDAY, JULY 30, 1902.

PART II.

Advertisements.

[N. B.—Advertisements, Notices, &c., intended for insertion in this part of the Gazette cannot be received after Noon on Monday.]

LAND SALE NOTICES.

Advertisement of Sale.

NOTICE is hereby given that the proprietary right of Government, as specified in the conditions of sale below, to the undermentioned estate, situated in the district of Rajshahi, will be put to sale at the Rajshahi Collectorate on the 1st September 1902, corresponding with 16th Bhadra 1309 (B.S.)

The purchaser will be subject to the following conditions of sale:—

Conditions of Sale.

1st.—The estate to be sold to the highest bidder above the upset price, which will be fixed by the Collector at the time of sale. The purchaser of this estate will be considered as the proprietor of the estate, and the entire proprietary right of Government in such estate will be transferred to him, subject to the revenue fixed in perpetuity.

2nd.—The sale to be subject to existing leases and to the rights conferred by the settlement proceedings and by the laws in force, and purchasers to be bound to respect the rights of resident cultivators who have signed the schedule of assessment prepared by the revenue authorities.

3rd.—If the amount of purchase-money do not exceed Rs. 100, the whole amount to be paid down at once.

4th.—If the amount of purchase-money exceed Rs. 100, one-fourth of the amount bid to be immediately deposited. If the balance be not paid by noon of the fifteenth day after the sale, reckoning the day of sale as one, or, if that day be a close holiday, then by noon of the first succeeding office day, the sale is to be cancelled (the sum deposited being forfeited to Government), and the estate to be again put up to sale at the risk of the defaulting purchaser, after issue of advertisement, as in the case of original sale.

Number on the district roll.	Name of estate and pargana.	Approximate area in acres.	Government revenue assessed.	Remarks.
		A. R. P.	Rs. A. P.	
1991	Mauza Bhadum, pargana Mehamanshahi ...	179 3 10$\frac{1}{2}$	357 9 6	

Rajshahi Collectorate, the 16th July 1902.

F. R. Ross, Collector.

NOTICE is hereby given, under sections 6 and 13, Act XI of 1859, that the undermentioned estates or shares of estates in the district of Bhagalpur will be put up for sale at the office of the Collector of that district on the 4th August 1902 for arrears of revenue and other demands which by law are realisable as arrears of land revenue.

When in columns 5, 7, and 9 of the appended statement it is stated that only a share is to be sold, it is to be understood that a separate account is kept for that share. All other shares besides that specified will be excluded from the sale.

Tauzi No.	Name of estate, thana or pargana.	Sadar jama of whole estate.	Whether the whole estate is to be sold.	If only a share is to be sold, specification of such share or shares.	Names of proprietors of property to be sold.	If only a share is to be sold, the sadar jama of such share.	If the whole estate is to be sold, the arrears due from it.	If only a share is to be sold, the share due from it.
1	2	3	4	5	6	7	8	9
533	Mokrohi, pargana Naredegar, thana Supoul.	Rs. A. P. 3,768 0 0	.....	Residuary ijmali share— A. G. C. KT. Bishenpur ... ... 10 13 1 1 Beldra ... ... 5 6 2 2 Bharha ... ... 16 0 0 0 Piprasi ... ... } 16 0 0 0 Badal Kalapatti ... } Dubiahi ... ... 11 8 0 0 Debi Patti ... ... 16 0 0 0 Dina Patti ... ... 16 0 0 0 Gamharpur 16 0 0 0	Raja Surendra Narain Singh, &c. Durga Narain Singh. Bishunman Singh, &c. Ditto. Ditto. Rai Babu Narendra Narain Singh, &c. Ditto. Bishunman Singh, &c.	Rs. A. P. 1,520 10 0	.....	Rs. A. P. 32 15 0
3556	Mohanpur Nowhatta, pargana Kahkhand, thana Bongong.	805 12 0	.....	Residuary ijmali share— 16 annas Mohanpur Kalan, asli with dakhli, 3a. 3g. 1c. 1kt. in Nowhatta.	Mardan Ali Kha and others.	632 9 0	.....	24 7 0

Bhagalpur Collector's Office, the 3rd July 1902. A. MARR, *for* Collector.

APPENDIX XXX.

Advertisement of Sale.

NOTICE is hereby given that the undermentioned plots of land no longer required by Government, situated along the main line of the East Coast (now Bengal-Nagpur) Railway, in the district of Puri, will be put up to sale at 12 o'clock on 8th day of August 1902, corresponding with the 24th Sraban 1309 Fasli at the Puri station.

The purchasers of the several plots of land will be subject to the following conditions:—

1st.—The purchasers will have no power to make any excavations on the land nearer than 15 feet from the railway fencing, or plough the land closer than three feet from its foundation.

2nd.—If the amount of purchase-money does not exceed Rs. 100, the whole amount must be paid down at once.

3rd.—If the amount of purchase-money exceed Rs. 100, one-fourth of the amount must be immediately deposited. If the balance be not paid by noon of the fifteenth day after the sale, reckoning the day of sale as one, or if that day be a close holiday, then by noon of the first succeeding office day, the sale shall be cancelled, the sum deposited being forfeited to Government, and the lot again put up for sale at the risk of the defaulting purchaser after issue of advertisement as in the case of original sale.

4th.—The plots of land will be sold revenue-free to the highest bidders.

5th.—The purchasers shall be put in possession on receipt by the District Collector of the orders of the Board confirming the sale.

Consecutive lot number.	Name of district.	Pargana and mauza.	Number of mile on which land is situate.	Situated on which side of the Railway.	Approximate area of lot in bighas and acres.		Land excluded from sale from each lot.		Commencement and termination of lot.	Boundary of lot.
					B. K. G.	A. R. P.	Reasons for exclusion.	A. R. P.		
1	2	3	4	5	6		7		8	9
1	Puri ...	Mauza Nayagur, zilla Rameswar, kila Khurda, district Puri.	469	West of the Railway line.	.....	2 0 10	.....	.....	Lots Nos. 1 and 2.	Lot No. 1. *North.*—Markand Patra's garden and Government waste land. *South.*—Mulikhan's garden. *East.*—Cultivated land of Pandab Srichamdan and Bhikar Khan. *West.*—Cultivated land of Umir Khan, Shaik Fakir, and Pandab Srichandan.
2	Do. ...	Mauza Taladihi, zilla Kuhuri, kila Khurda, district Puri.	449	East of the Railway line.	.....	2 0 10	.....	.....	.....	Lot No. 2. *North.*—Chanda Santra's land. *South.*—Road. *East.*—Road. *West.*—Chanda Santra's land.

Puri, the 16th June 1902. A. GARRETT, Collector.

Advertisement of Sale.

NOTICE is hereby given that the undermentioned plots of land, no longer required by Government, situated along the East Coast (now Bengal-Nagpur) Railway, Puri Branch, in the district of Puri, will be put up to sale at 12 o'clock on the 4th day of August 1902, corresponding with the 20th Sraban 1309 Fasli, at the Puri station.

The purchasers of the several plots of land will be subject to the following conditions:—

1st.—The purchasers will have no power to make any excavations on the land nearer than 15 feet from the railway fencing or plough the lands closer than 3 feet from its foundation.

2nd.—If the amount of purchase-money does not exceed Rs. 100, the whole amount must be paid down at once.

3rd.—If the amount of purchase-money exceed Rs. 100, one-fourth of the amount must be immediately deposited. If the balance be not paid by noon of the fifteenth day after the sale, reckoning the day of sale as one, or if that day be a close holiday, then by noon of the first succeeding office day, the sale shall be cancelled, the sum deposited being forfeited to Government, and the lot again put up for sale at the risk of the defaulting purchaser, after issue of advertisement, as in the case of original sale.

4th.—The plots of land will be sold revenue-free to the highest bidders.

5th.—The purchasers shall be put in possession on receipt by the District Collector of the orders of the Board confirming the sale.

Consecutive lot No.	Name of district.	Pargana and mauza.	Number of mile on which land is situate.	Situated on which side of the railway.	Approximate area of lot in bighas and in acres.		Land excluded from sale from each lot.		Commencement and termination of lot.	Boundary of lot.
					B. K. CH.	A. R. P.	Reasons for exclusion.	A. R. P.		
1	2	3	4	5	6		7		8	9
										(Lot No. 1.)
1	Puri ...	Pargana Rahang, ma. Somong.	At mile No. 24.	East of the Railway line.	.....	1 3 30	.....	.....	Lot Nos. 1 to 4 ...	*North*—Somong Bharathipur, tanki bajapti land of Hira Biswal. *South*—Kasiharipur. The land to be relinquished in the 25th mile. *East*—Somong Bharathipur, waste land of Bhagban Ramanuj Das and Durga Charan Jagadeb Ray; raiyati land of Apartia Bhoi and lakhraj bajapti land of Baibhadra Prusti and Bhagaban Raitsing. *West*—Somong Bharathipur, railway line.
										(Lot No. 2.)
2	Do. ...	Ditto ...	Ditto	West of the Railway line.	.....	4 3 18	Required temporarily by P. W. D. for brick-field.	4 3 18	.....	*North*—Somong Bharathipur, lakhraj bajapti land of Ajib Sundra and Dasa Baral and a *jora* (water channel) of Badyanath Brahmachari. *South*—Somong Bharathipur. The land to be relinquished in the 25th mile. *East*—Somong Bharathipur, railway line. *West*—Somong Bharathipur, tanki jagiri land of Mahadeb Mahapatra and Narain Mahapatra; tanki bajapti land of Badyanath Brahmachari and tanki bahal land of Gadadhar Brahmachari.
										(Lot No. 3.)
3	Do. ..	Pargana Rahang, ma. Kasiharipur.	At mile No. 25.	East of the Railway line.	.....	3 2 39	.....	.....	.....	*North*—Kasiharipur and Somong Bharathipur. The land to be relinquished in the 24th mile. *South*—Kasiharipur, lakhraj bajapti land of Durga Charan Bharathi. *East*—Kasiharipur embankment, tanki bahal land of Siba Prusti and Durga Charan Bharathi. *West*—Kasiharipur, railway line.
										(Lot No. 4.)
4	Do. ...	Ditto ...	Ditto	West of the Railway line.	.....	11 1 24	Required temporarily by P. W. D. for brick-field.	1 2 14	.....	*North*—Somong Bharathipur. The land to be relinquished in the 24th mile. *South*—Kasiharipur, lakhraj bajapti land of Balunkeswar Deb, Siba Prusti and Magual Raut. *East*—Kasiharipur, railway line. *West*—Kasiharipur, raiyati land of Gobind Padhan and Abhi Jena; lakhraj bajapti land of Siba Prusti and Brundu Raut and tanki bahal land of Siba Prusti.
		Total ...	.....	.....	.....	21 3 31	.....	6 0 32		

Puri Collectorate, the 11th June 1902.

A. GARRETT, Collector.

Notification A.

NOTICE is hereby given, under sections 6 and 13, Act XI of 1859, that the undermentioned estates and shares of estates in the district of Monghyr will be put up for sale at the office of the Collector of that district on the 18th August 1902 at noon for arrears of revenue and other demands which by law are realisable as arrears of land revenue.

When in columns 5, 7 and 9 of the appended statement it is stated that only a share is to be sold, it is to be understood that a separate account is kept for that share.

Tauzi No.	Name of mahal and pargana.	Sadar jama of whole estate.	Whether the whole estate is to be sold.	If only a share is to be sold, specification of such share or shares.	Names of proprietors of property to be sold.	If only a share is to be sold, the sadar jama of such share.	If the whole estate is to be sold, the arrears due from it.	If only a share is to be sold, the arrears due from it.
1	2	3	4	5	6	7	8	9
		Rs. A. P.		*Permanently-settled Estates.*		Rs. A. P.	Rs. A. P.	Rs. A. P.
226	Katri Akhtayarpur, pargana Maldeh.	5,988 15 0	.....	The residuary share in the following mauzas :—	Babu Gopal Lal and others.	612 12 0	.....	35 9 0
				A. G. C. B.				
				1. Katri Akhtayarpur 1 14 19 3				
				2 Maldeh Khurd 1 11 4 3				
				3. Maldeh buzurg asli main nagdeh, Dayanut, Chak dakhli 1 11 4 3				
				4. Sarba buzurg, Sarba khurd and Kalayanpur Sarba asli main Jamalpur, buzurg and Jamalpur khurd dakhli 1 11 4 3				
				5. Belao Subhanpur, Belao main Lutfpur and Padumpur and Bhimpur 1 11 4 3				
				6. Belari and Mohamedpur Belari ... 1 14 19 3				
				7. Budi chak dakhli Belari 1 14 19 3				
				8. Saidi 1 14 19 3				
				9. Kishunpur 1 14 19 3				
				All other shares besides that specified above are excluded from the sale.				
537	Shakerpur, pargana Pharkia.	1,006 4 0	Whole ...	.....	Birj Lal Singh and others.	.....	11 3 5	.....
626	Shirnia, pargana Balia.	1,073 12 0	.....	7a. 0g. 1c. 1k. ijmali share	Ganga Pershad Sahu and others.	501 1 0	.....	151 11 0
				All other shares besides that specified above and the separate account No. 1 of Nawab Singh for Rs. 286-6 are excluded from the sale.				
815	Sihanwan Karari, pargana Malki.	1,120 7 0	.....	Ijmali share which cannot be specified excluding the separate accounts—	Lil Kanth Chowdhry and Saheb Chowdhry and others.	518 5 0	.....	133 1 6
				Rs. A.				
				2. Of Chettru Singh 112 0				
				3. ,, Kali Pershad Singh 218 5				
				5. ,, Kharag Singh 5 4				
				6. ,, Fazal Rahman, *alias* Sageeruddin 2 5				
				7. ,, Gumani Rai 4 6				
				8. ,, Mahalush Singh, &c. 43 9				
				9. ,, Bhim Singh, &c. 9 10				
				10. ,, Sibu Singh, &c. 74 7				
				11. ,, Bhagwan Pershad, receiver of the estates of Suja Mahanth 31 15				
				12. ,, Khanter Singh, &c. 26 4				
				13. ,, Gano Singh, &c. 70 0				
				Total ... 602 2				
				All other shares, besides the ijmali share specified above and separate account No. 6 for Rs. 2-5, and separate account No. 10 for Rs. 74-7, are excluded from sale.				
1072	Baikunthpur, pargana Bhusari.	1,193 8 0	Whole ...	.....	Abunasar Jalaluddin, Manager of Mussamat Girjabati Kumri and others.	.....	17 11 1	.....
1166	Qasba Sheik Dih Haitampur, pargana Masjidpur.	1,026 5 0	.....	Ijmali share consisting of Sheikdih 16a., Hotampur 12a. 5g.	Turant Lal, &c. ...	946 9 0	.....	315 10 0
				All other shares besides that specified above are excluded from sale.				
4420	Diara Gang Barar Sihanwan, pargana Malki.	2,881 8 0	.....	5a. 6g. 12r. ijmali share	Kalli Singh and others.	953 14 0	.....	46 9 6
				All other shares besides that specified above and the separate account No. 6 of Jhaman Singh for Rs. 207-6 are excluded from sale.				
				Temporarily-settled Estates.				
1334	Tarapur Diara, pargana Monghyr.	13,797 13 0	Whole .	... ..	Mussamat Jainti Kumri, of Ulao, and others.	.....	383 14 0	.....
1406	Bhawanundpur *alias* Ramduri, pargana Malki.	10,680 15 0	Do. ...	.....	Jagatdhar Narayan Pershad, under the guardianship of mother Mussamat Tirbeni Kumri.	.....	5,340 8 8	.....
1433	Akbarpur Barari, pargana Malki.	1,536 11 0	Do. ...	.....	Udwant Singh and others.	.....	95 11 6	.....

Monghyr Collectorate, the 12th July 1902.

F. J. JEFFRIES, Offg. Collector.

Notification B.

NOTICE is hereby given, under sections 5 and 13, Act XI of 1859, that unless the arrears mentioned below are paid on or before the next latest date of payment, viz., the 28th June 1902, the undermentioned estates or shares of estates in the district of Tippera will be put up for sale at the office of the Collector of that district on the 26th September 1902 at 12 o'clock for the said arrears.

When in columns 5, 7 and 9 of the appended statement it is stated that only a share is to be sold, it is to be understood that a separate account is kept for that share.

Tauzi No.	Name of mahal and pargana.	Sadar jama of whole estate.	Whether the whole estate is to be sold.	If only a share is to be sold, specification of such share or shares.	Names of proprietors of property to be sold.	If only a share is to be sold, the sadar jama of such share.	If the whole estate is to be sold, the arrears due from it.	If only a share is to be sold, the arrears due from it.	Nature and amount of demand for which to be sold.
1	2	3	4	5	6	7	8	9	10
		Rs. A. P.				Rs. A. P.	Rs. A. P.	Rs. A. P.	Rs. A. P.
1925	Pargana Uttar Sahapur char near Nagarer Kandi, No. 211.	1,396 10 9	Whole ...	.....	Ishan Chandra Datta and others.	.....	202 9 4	.....	202 9 4

Tippera Collectorate the 29th May 1902.

H. W. SCHOOFS, Offg. Collector.

Notification A.

NOTICE is hereby given, under sections 6 and 13, Act XI of 1859, that the undermentioned estates and shares of estates in the district of Muzaffarpur will be put up for sale at the office of the Collector of that district on the 8th September 1902, corresponding with 20th Bhado 1309 F.S., for arrears of revenue and other demands which by law are realisable as arrears of land revenue.

When in columns 5, 7 and 9 of the appended statement it is stated that only a share is to be sold, it is to be understood that a separate account is kept for that share.

Tauzi No.	Name of mahal and pargana.	Sadar jama of whole estate.	Whether the whole estate is to be sold.	If only a share is to be sold, specification of such share or shares.	Names of proprietors of property to be sold.	If only a share is to be sold, the sadar jama of such share.	If the whole estate is to be sold, the arrears due from it.	If only a share is to be sold, the arrears due from it.
1	2	3	4	5	6	7	8	9
		Rs. A. P.				Rs. A. P.	Rs. A. P.	Rs. A. P.
908 Rs.	Amwa Kalan Newazun, pargana Babra Chauparan.	2,000 13 9	.....	Residuary share, 5a. 7p. ... ... All other shares besides that specified will be excluded from sale.	Babu Isre Prosad and others.	608 2 9	.....	17 9 7
1680	Baijnathpur Krishn Coomar, pargana Gadhsund.	671 8 1	The whole	..	Babu Durga Coomar Upadhea and others.	... ..	161 3 0	.....
2485 Rs.	Pojhia-Basunt, Chukla Gurjaul, pargana Bisara.	1,603 10 7	.....	Residuary share— A. G. C. KT. Pojhia-Basunt ... ... 5 1 2 2 Barchia and Pojhia Zamin ... ... 5 1 2 2 Jahanabad ... ... 5 1 2 2 Ghataro-khas-zamin ... 5 1 2 2 Chuk Rahmat ... ... 5 1 2 2 Hansi Gharam ... ... 5 1 2 2 Ghataro-doolum ... ... 3 16 2 1 Raghoonathpur ... ... 3 16 0 0 All other shares besides that specified will be excluded from sale.	Babu Zoolumdhari Prosad Singh and others.	537 3 8	.....	106 3 5
5150	Poorab Chhupra Vishwnath Singh, pargana Nanpur.	642 8 7	The whole	...	Babu Dabi Prosad Singh and others.	.....	33 10 9	.....
11277	Chatarbhoojpur Bhairo Missar, pargana Rutti.	648 12 2	Ditto ...	.. .	Rai Manindra Bahadur, minor under the guardianship of Musamat Goolab Kuner, mother, and Babu Moti Chand and others.	.....	849 3 2	.....
11714	Kamaldah, pargana Tirsath.	855 13 4	Ditto ...	.....	Mirza Nazir Hosson and others.	.....	207 2 10	.....

Muzaffarpur Collectorate, the 25th July 1902.

E. V. LEVINGE, Collector.

Notification A.

NOTICE is hereby given, under sections 6 and 13, Act XI of 1859, that the undermentioned estates and shares of estates in the district of Khulna will be put up for sale at the office of the Collector of that district on the 15th September 1902 at 12 A.M. for arrears of revenue and other demands which by law are realisable as arrears of land revenue.

When in columns 5, 7, and 9 of the appended statement it is stated that only a share is to be sold, it is to be understood that a separate account is kept for that share :—

Tauzi No.	Name of mahal and pargana.	Sadar jama of whole estate.	Whether the whole estate is to be sold.	If only a share is to be sold, specification of such share or shares.	Names of proprietors of property to be sold.	If only a share is to be sold, the sadar jama of such share.	If the whole estate is to be sold, the arrears due from it.	If only a share is to be sold, the arrears due from it.
1	2	3	4	5	6	7	8	9
		Rs. A. P.				Rs. A. P.	Rs. A. P.	Rs. A. P.
77	Dhuliapur, pargana Dhuliapur.	.....	No ...	Share No. 1—5 annas	Promotho Nath Pal Choudhury and others	5,402 2 9½	.....	2,442 15 4½
32	Khalia chuck, pargana Sundarbans.	.....	No ...	Share No. 2—8 annas	Kamalbasini Dasi and others.	672 2 6	.....	56 8 8

Khulna Collectorate, the 16th July 1902.

S. C. MUKERJEE, Collector.

Notification A.

NOTICE is hereby given, under sections 6 and 13, Act XI of 1859, that the undermentioned estates and shares of estates in the district of Tippera will be put up for sale at the office of the Collector of that district on the 26th September 1902 at 12 o'clock for arrears of revenue and other demands which by law are realisable as arrears of land revenue.

When in columns 5, 7 and 9 of the appended statement it is stated that only a share is to be sold, it is to be understood that a separate account is kept for that share.

Tauzi No.	Name of mahal and pargana.	Sadar jama of whole estate.	Whether the whole estate is to be sold.	If only a share is to be sold, specification of such share or shares.	Names of proprietors of property to be sold.	If only a share is to be sold, the sadar jama of such share.	If the whole estate is to be sold, the arrears due from it.	If only a share is to be sold, the arrears due from it.
1	2	3	4	5	6	7	8	9
		Rs. A. P.				Rs. A. P.	Rs. A. P.	Rs. A. P.
285	Taluq Sribatsha Das, pargana Gunanundi.	1,232 11 7	Whole ...	.....	Srimati Monyakhoya Chowdhurani, manager on behalf of minor Harendra Chandra *alias* Har Kumar Pal Chowdhury and others.	.....	18 12 2	.....
430	Gazipur Monipur Chur No. 24-71, pargana Maizardi.	1,233 1 0	Do. ...	.....	Kashi Chandra Pal Chowdhury and others.	.....	84 14 4	.....
1936	Char near Nogarerkandi No. 211, pargana Uttershahapur.	1,296 10 9	Do. ...	.....	Ishan Chandra Dutt and others.	.....	202 9 4	.....
1933/21	Pargana Bardakhat Doulatpur[illegible]: the term is from 1261 to 1316 B.S.	1,379 3 10	Do. ...	.....	Bepra Charan Ghosh and others.	.....	173 1 0	.....
2299	Shonapur Tajpur, pargana Zazira.	870 10 0	Do. ...	.....	Tojammal Ali Chowdhury and others.	.....	200 0 0	.....

Tippera Collectorate, the 26th July 1902.

H. W. SCROOPE, Collector.

Notice of Sale for Arrears of Revenue.

NOTICE is hereby given, under section VI, Act XI of 1859, read with Act VII (B.C.) of 1868 and Act II (B.C.) of 1871, that the undermentioned Noabad taluks within the Cox's Bazar khas mahal, in the district of Chittagong, will be put up to public and unreserved sale at the Collector's office of that district on the 2nd September 1902 for arrears and cesses remaining unpaid on the $\frac{25}{26}$th May 1902 :—

Name of tenure.	Name of mauza, thana and mahal.	Name of talukdar.	SADAR JAMA.		AMOUNT OF ARREAR FOR WHICH THE TENURE IS TO BE SOLD.		
			Rent.	Cesses.	Rent.	Cesses.	Total.
1	2	3	4	5	6	7	8
			Rs. A. P.	Rs. A. P.	Rs. A. P.	Rs. A. P.	Rs. A. P.
47/10—80	Thana Ramoo, mauza Khuruskel, taluk Tajannisa.	Mozaffar Ahmad, son of Asharaf Ali Chowdhuri, of Chowfoldondi.	2,648 8 0	176 13 0	590 6 0	58 15 0	649 5 6
296/289—302	Thana Chakaria, mauza Rajakhali, taluk Bibi Esprak.	Nesamat Ali Chowdhuri, son of Mohammad Kali Chowdhuri, of Bora Khin.	1,005 10 0	215 12 6	1,578 4 0	431 9 0	2,009 13 0

Chittagong, the 19th July 1902.

A. H. VERNEDE, Covtd. Depy. Collr, *for* Collr

NOTICE is hereby given, under sections 6 and 13, Act XI of 1859, that the undermentioned estate or share of estate in the district of Darbhanga will be put up for sale at the office of the Collector of that district on the 5th September 1902, corresponding with 17th Bhado 1309 Fasli, at 12 A.M. on Friday for arrears of revenue and other demands, which by law are realizable as arrears of land revenue.

When in columns 5, 7 and 9 of the appended statement it is stated that only a share is to be sold, it is to be understood that a separate account is kept for that share. All other shares besides that specified will be excluded from the sale.

Tauzi No.	Name of estate, thana or pargana.	Sadar jama of whole estate.	Whether the whole estate is to be sold.	If only a share is to be sold, specification of such share or shares.	Names of proprietors of property to be sold.	If only a share is to be sold, the sadar jama of such share.	If the whole estate is to be sold, the arrears due from it.	If only a share is to be sold, the share due from it.
1	2	3	4	5	6	7	8	9
1810	Ahiari, pargana Bharmara, thana Darbhanga.	Rs. A. P. 1,831 2 4	Whole ...	.....	Lala Binda Prasad, Lala Shew Charan Lal, Lala Chedi Lal, Lala Sital Prasad, Lala Jagar Nath Prasad, &c.	.....	Rs. A. P. 457 11 9	.....

Darbhanga Collectorate, the 24th July 1902.

S. L. MADDOX, Collector.

APPENDIX XXX.

[See Chapter III, Rule 9.]

Advertisement of Sale.

NOTICE is hereby given that the undermentioned plots of land, no longer required by Government, situated along the Assam-Bengal Railway, in the district of Chittagong, will be put up to sale at 11 o'clock on Monday the 22nd September 1902, corresponding with the 6th of Ashwin 1309 B.S., at the Collector's office, Chittagong.

The purchasers of the several plots of land will be subject to the following conditions :—

1st.—The purchasers will have no power to make any excavation on the land nearer than fifteen feet from the Railway fencing, or plough the land closer than three feet from its foundation.

2nd.—If the amount of purchase-money does not exceed Rs. 100, the whole amount must be paid down at once.

3rd.—If the amount of purchase-money exceeds Rs. 100, one-fourth of the amount must be immediately deposited. If the balance be not paid by noon of the fifteenth day after the sale, reckoning the day of sale as one, or if that day be a close holiday, then by noon of the first succeeding office day, the sale shall be cancelled, the sum deposited being forfeited to Government and the lot again put up for sale at the risk of the defaulting purchaser, after issue of advertisement, as in the case of original sale.

4th.—The plots of land will be sold revenue-free to the highest bidders.

5th.—The purchasers shall be put in possession on receipt by the Collector of the orders of the Board confirming the sales.

Consecutive lot number.	Name of district.	Mauza.	Number of mile on which land is situate.	Situated on which side of the Railway.	Approximate area of lot in kanis and acres.		Land excluded from sale from each plot.		Commencement and termination of lot.	Boundary of lot.
					Maghi kani.	Acre.	Reasons for exclusion.	A. R. P.		
1	2	3	4	5	6		7		8	9
					Kani.	A. R. P.				
1	Chittagong ...	Bhatiary	8th mile	East side	43·63	17 2 5	Nil	Nil	Nil	Nil.
2	Ditto ...	Sonaicherry	14th do.	West side	28·57	11 1 27	,,	,,	,,	,,
3	Ditto ...	Banaberia	18th do.	Ditto	25·68	10 1 3	,,	,,	,,	,,
4	Ditto ...	Katgar	20th do.	East side	35·80	14 1 15	,,	,,	,,	,,
5	Ditto ...	Terial	27th do.	West side	29·37	11 2 38	,,	,,	,,	,,
6	Ditto ...	Wahedpur	32nd do.	Ditto	25·31	9 3 29	,,	,,	,,	,,
7	Ditto ...	Gobania	36th do.	Ditto	23·30	9 1 11	,,	,,	,,	,,
8	Ditto ...	Azamnagar	45th do.	East side	21·10	8 1 30	,,	,,	,,	,,

Chittagong, the 26th July 1902.

E. GRAKE, Collector.

SALE of patni rights of Biby Jorao Kumari Sahiba in Estate Mahomed Aminpur, tauzi No. 3989, which include the patni right in Baidyabti *hât* in village Sheoraphuli in thana Serampore, district Hooghly :—

No. of estate.	Name and residence of judgment-debtor.	Specification of judgment-debtor's interest to be sold.	Date fixed for sale.	Nature and amount of arrears.	Remarks.
3989	S. M. Biby Jorao Kumari Sahiba, of 147 Barabazar, Cotton Street, Calcutta.	The entire patni right held under Zamindar Maharaja Sir Jotendro Mohon Tagore, K.C.S.I., to whom she pays Rs. 46,136-14-6 annually as her patni rent. This patni includes also the patni right in Baidyabati *hât* in village Seoraphuli in thana Serampore, district Hooghly.	25th September 1902, corresponding to B.S. 9th Aswin 1309.	Due on account of engagements Nos. 190, 116, 117, 162, 242, 243 and 311 in connection with the Howrah Drainage Scheme and engagement No. 1449 in connection with the Rajapore Drainage Scheme, Rs. 41,614-7-10.	Howrah Drainage Certificate Cases Nos. 1125 of 1898-99, 186, 187, 273, 104 and 274 of 1901-1902 and 424 and 214 of 1900-1901.

MAHESH CH. SEN, Certificate Officer, Hooghly,

Hooghly Collectorate, Certificate Department, the 21st of July 1902.

Notification.

NOTICE is hereby given, under sections 6 and 13, Act XI of 1859, that the undermentioned estates and shares of estates in the district of Shahabad will be put up for sale at the office of the Collector of that district on Thursday, the 28th August 1902, at 12 noon, corresponding with 9th Bhado 1309 F., for arrears of revenue and other demands which by law are realizable as arrears of land revenue.

When in columns 5, 7 and 9 of the appended statement it is stated that only a share is to be sold, it is to be understood that a separate account is kept for that share and the other share or shares in the estate are excluded from sale.

Tauzi No.	Name of mahal and pargana.	Sadar jama of whole estate.	Whether the whole estate is to be sold.	If only a share is to be sold, specification of such share or shares.	Names of proprietors of property to be sold.	If only a share is to be sold, the sadar jama of such share.	If the whole estate is to be sold, the arrears due from it.	If only a share is to be sold, the arrears due from it.
1	2	3	4	5	6	7	8	9
						Rs. A. P.	Rs. A. P.	Rs. A. P.
434	Mahuli Khurd, pargana Arrah.	550 0 0	Whole ...	.....	Rambaran Singh and others.	.....	190 15 6	.....
763	Koilwar, pargana Barahgawan.	7,770 12 7	Do. ...	.....	Kazi Mohamad Wahid Asraf, Bishun Pershad, Seri Maharani Beni Parshad Kuari, Babu Saligram Singh and others, proprietors of 16 annas.	.....	*L. R. 1,053 5 11 T. M. 4 8 0 Do. 2 4 0 1,060 1 11	.....
893 Ijmal	Chancher, pargana Behia.	1,713 9 8	.....	Ijmali share to be sold is 5a. 4p. and other share is excluded from sale.	Dhankumar Chand, Basanta Kuar and others.	571 2 11	.....	74 3 2
1211 Ijmal	Suhia, pargana Behia .	4,363 13 10	.....	Ijmali share to be sold is in Suhia 2a. 8p. Bharauli 5a. 4p. Other shares are excluded from sale.	Nund Lal, Ram Narain Singh and others.	644 15 3	.....	97 10 11
1269	Baruha, pargana Bhojpur.	870 10 8	Whole ...	.....	Jadunundan Singh, Raghunundan Singh and others.	.....	3 8 5	.....
1798	Kusurpa, pargana Chausa.	839 11 0	Do. ...	.....	Bhugwat Sahai, Mussammat Dulahin, Rama Kuar, wife of Raja Ram, Rasbehari Lal and others proprietors of 16 annas.	.....	† L. R. 145 14 4 T. M. 6 0 0 151 14 4	.....
2153	Barahuli, pargana Chainpur.	511 9 2	Do. ...	.....	Ram Saroop Singh, Chandan Singh and others.	.....	92 1 2	.....
2169	Bairi Raghunathpur, pargana Chainpur.	589 4 6	Do. ...	.....	Sooraj Narain Singh, self and guardian of Adit Prashad Singh.	.....	184 6 10	.....
2208	Umanpore, pargana Chainpur.	5,942 6 4	.....	Ijmali share to be sold is in village— As. P. Patilahang ... ... 13 9 Umanpore ... ... 1 3 Sahijna .. .. 4 3 Chandrauli ... ... 14 0 Sarnon . ... 8 6 Salamabisopore ... 12 0 Semeria .. .. 8 0 Choukhanda ... ... 16 0 Chak Bhagwat ... 8 0 Harkalia ... ... 8 0 Abidaura ... ... 16 0 Kutumanpore ... ... 16 0 Dhora Patisarwa ... 8 0 Saria Balbhadarpore 4 3 Kasthar ... ... 16 0 Kishunpura ... ... 11 0 Other shares are excluded from sale.	Ramdani Rai, Dudh Nath Rai and others.	2,111 12 1	.....	319 1 10
3000 3 and 7	Ruppur, pargana Chainpur.	14,486 15 9	.....	The share of separate account to be sold is khata 3 in village Ora 8a. and khata 7, 8a. in village Ora. Other shares are excluded from sale with the exception of khata 1 which will also be sold.	Jageshar Singh and others Adhat Singh	254 13 10 255 0 0	.....	109 3 4 .....
3074 Ijmal	Sondhi, pargana Chainpur.	1,036 4 3	. .	Ijmali share to be sold is in village— As. Majhgaon ... ... 16 Baruna ... ... 8 Jignazamin ... ... 8 Madanpura ... ... 8 Sondhi Esate Khandha 8 Mirga Rampur ... ... 8 Kharigawan ... ... 8 Rajabandh ... ... 8 Share in mahula ... ... 8 Other shares are excluded from sale.	Kishunanund Sham Behari Lal *alias* Gaya Lal and others.	527 15 7	.....	265 5 5
6095	Pandeypatti, pargana Bhojpur.	620 3 0	Whole ...	... ..	Sital Pershad, Kamlapat and others.	.....	106 5 9	.....

* These are the arrears due from khata 1 at March kist, and the sale is held under section XIV, Act XI of 1859.
† These are the arrears due from ijmali share for March kist, and the sale is held under section XIV, Act XI of 1859.

Arrah, the 24th July 1902.

H. COUPLAND, Collector.

District Charitable Society.

Abstract of Cash Accounts of the Central Office for the month of June 1902.

Budget for 1902.	Receipts.	June 1902.	From 1st January to 30th June 1902.	Budget for 1902.	Payments.	June 1902.	From 1st January to 30th June 1902.
Rs.		Rs. A. P.	Rs. A. P.	Rs.		Rs. A. P.	Rs. A. P.
14,400	Subscriptions— From Government	1,200 0 0	7,200 0 0	11,400	Grant to District Committees	242 0 0	5,802 0 0
11,441	,, the public	751 0 0	8,258 0 0	4,000	,, ,, Commissioner of Police for Casual Relief ... Establishment ...	316 14 0	1,557 11 3
9,000	Donations and new subscriptions	*491 0 0	**2,703 14 4			75 0 0	450 0 0
	Allowances towards cost of establishment—			20,895	,, ,, Native Committee	1,616 8 0	9,699 0 0
3,000	From Government	250 0 0	1,500 0 0	10,152	Pensions paid through Central Office...	850 8 0	4,909 0 0
.....	Interest on invested general fund ...	.....	.....	276	Schooling Fees ,, ,, ...	13 0 0	118 0 0
39,503	,, ,, Trust Funds	1,241 12 0	18,867 5 6	3,000	Special Relief (on private orders) ...	134 8 0	1,104 15 6
684	Bakery proceeds	†62 15 6	††415 5 3	3,780	Alms House :—Establishment	319 0 0	1,895 8 0
4,047	Workshed proceeds	§244 10 0	§§1,615 10 6	10,500	Dieting	†879 4 9	††1,996 7 6
1,300	Refund on Casual Relief Account ..	102 13 0	523 13 0	1,680	Contingencies	106 0 0	610 2 0
3,200	,, ,, Special Relief ,, ...	295 1 0	956 1 0	.....	Boots and Shoes	.....	.....
500	Legacies	.....	.....	500	Clothing and Bedding ...	.....	267 4 0
150	Miscellaneous Accounts	10 3 2	11 15 1	700	Municipal Taxes	191 9 6	383 3 0
.....	Advances	.....	.....	250	Repairs	.....	106 4 6
931	Deposits	36 15 2	371 15 6	3,282	Bakery	§209 7 6	§§1,470 11 3
400	Christmas dinner account	.. ..	5 0 0	5,238	Workshed	438 15 9	2,709 13 3
.....	G. P. Notes withdrawn from Bank's safe custody.	.....	600 0 0	7,368	Central Office :—Establishment	614 8 0	3,667 6 2
.....	G. P. Notes by corpus of Trust Funds	.....	.....	503	Commission on Collections ..	23 15 4	264 4 9
.. ..	,, ,, by Security deposit ...	.....	500 0 0	300	Auditing Fees	.....	150 0 0
350	Donation to Native Committee ...	.....	.. ..	500	Rent (nett)	60 10 9	296 13 6
				550	Contingencies	60 6 6	282 9 7
				750	Printing and Advertising ...	241 12 0	535 ●2 0
				20	Interest on Overdraft		2 4 0
				58	Bank's Commission	3 3 7	30 7 8
				5	Law Charges	.....	5 0 0
				800	E. I. Railway Co. for Passes	52 9 8	‡232 10 9
				.. ..	Advances		10 0 0
				851	Deposits	19 14 6	752 10 10
				400	Christmas dinner account	...	255 0 0
				.... .	Safe custody deposit of G. P. Notes	.....	500 0 0
				.....	Security refunded	... ..	500 0 0
88,606	Total ...	4,676 4 10	43,529 0 2	88,514	Total ...	7,194 12 2	43,624 5 0

New subscriptions * Rs. 18; ** Rs. 226. | ‡ Rupees 201-15 for Casual Relief; Rs. 50-8-6 for Special Relief.
Excluding cost of bread from Bakery for A. H. Dieting † Rs. 423-5; †† Rs. 2,511-13-6, Budget being Rs. 5,169.
Excluding cost of flour from Workshed to Bakery, § Rs. 117-13, §§ Rs. 680-14, Budget being Rs. 1,080.

MEMO.

	Rs. A. P.		Rs. A. P.
Receipts as above	43,529 0 2	Payments as above	43,624 5 0
Balance at credit in Bank of Bengal on 1st Jan. 1902	2,774 0 8	Balance at credit in Bank of Bengal on 30th June 1902 ...	3,102 12 5
Opening cash balance on that date	673 9 7	Cash balance in hand on that date	249 9 0
	3,447 10 3		3,352 5 5
Total ...	46,976 10 5	Total ...	46,976 10 5

Calcutta,
The 10th July 1902.

K. Mallika,
Accountant.

H. S. Cashman,
Secretary.

Statement of the Affairs of the Bank of Bengal for the week ending 22nd July 1902.

LIABILITIES.

	Rs.	A.	P.
Capital paid up	2,00,00,000	0	0
Reserve Fund	1,14,00,000	0	0
Public Deposits at Head Office ... ... Rs. 86,37,240 5 8			
Ditto ditto at Branches ,, 1,00,54,379 9 2	1,83,91,619	14	10
Other Deposits at Head Office and Branches ...	8,23,30,542	11	4
Bank Post Bills, &c.	3,51,166	5	6
Sundries	13,74,740	6	9
Rupees ...	13,41,48,369	6	5

ASSETS.

	Rs	A.	P
Government securities	1,62,45,709	0	0
Other authorised investments	66,68,860	0	0
Loans on Government and other authorised securities	2,82,17,703	10	1
Accounts of credit on ditto ditto	1,49,20,870	15	11
Bills discounted and purchased	1,90,99,217	3	3
Balances with other Banks	12,44,590	5	8
Bullion	.....		
Dead Stock	16,03,887	8	10
Stamps	13,327	4	8
Sundries	9 93,169	12	7
	8,90,10,335	13	0
Cash & Currency Notes at Head Office* ... Rs. 2,55,09,150 15 6			
Cash & Currency Notes at Branches† ... ,, 1,96,28,882 9 11	4,51,38,033	9	5
Rupees ...	13,41,48,369	6	5

* Includes Sovs. and ½ Sovs., value Rs. 83,370 0 0
† Do. do. do. ,, 1,63,650 0 0
Rs. 2,47,020 0 0

Bank of Bengal,
Calcutta, the 24th July 1902.

E. J. Birch, Chief Accountant.
Rate for Demand Loans 3 per cent.
Percentage 43·93.

By order of the Directors,
W. D. Cruickshank,
Secretary and Treasurer.

(438—1)

INSOLVENT ESTATES.

QUARTERLY STATEMENT MADE UP TO 30TH JUNE 1901.

ESTATES.	Whole amount of receipts.	WHOLE DISBURSEMENTS.		Balance.	Portion of balance applicable to dividends now payable.	Net balance.	Probable outturn of the dependencies.
		Dividends paid.	Other payments.				
	Rs. A. P.	Rs. A. P.	Rs. A. P.	Rs. A. P.	Rs. A. P.	Rs. A. P.	
Alexander & Co. ...	2,91,087 1 9	2,32,428 3 10	48,899 13 8	9,759 0 3	8,954 5 1	804 11 2	Nothing further recoverable.
Adam, Scott & Co. ...	1,31,609 5 4	1,06,547 4 0	23,086 5 1	1,975 12 3	1,109 15 0	865 13 3	Ditto ditto.
Allen. Deffell & Co. ...	1,57,553 10 4	1,26,063 13 5	30,521 2 3	968 10 8	946 1 5	22 9 3	Ditto ditto.
Anderson & Co., William ...	2,678 8 1	.....	1,845 4 3	833 3 10	625 11 6	207 8 4	Ditto ditto.
Asiatic Marine Insurance Office ...	8,40,361 11 1	6,92,443 5 11	1,38,990 12 9	8,927 8 5	8,621 4 0	306 4 5	Ditto ditto.
Alexander Wallace & Co. ...	24,142 11 7	16,356 2 7	6,404 3 1	1,382 5 11	1,268 10 4	113 11 7	Ditto ditto.
Anstruthers & Co. ...	17,005 3 3	7,366 11 6	3,747 4 1	5,891 3 8	5.496 3 11	394 15 9	Ditto ditto.
Anderson, George ...	1,806 12 6	.....	953 9 3	853 3 3	733 0 2	120 3 1	Ditto ditto.
Atkinson & Co., W. L. ...	17,234 12 9	5,630 9 6	8,863 2 11	2,741 0 4	2,058 0 4	683 0 0	Ditto ditto.
Arrakie, J. G. ...	1,024 5 6	52 6 1	394 15 9	576 15 8	129 2 7	447 13 1	Ditto ditto.
Audhur Chunder Shaw ...	18,849 9 11	8,134 4 9	8,242 15 4	2,472 5 10	1,207 3 3	1,265 2 7	Ditto ditto.
Aycobe Hadjee Abdool Rohomon ...	11,461 10 3	7,959 6 6	2,088 9 11	1,413 9 10	1,299 3 10	114 6 0	Ditto ditto.
Anundo Mohun Dutt and another ...	3,739 2 3	530 1 1	2,540 9 5	668 7 9	668 7 9	.....	Ditto ditto.
Anderson, G. (2nd) ...	4,963 9 4	2,759 15 3	1,560 1 9	643 8 4	292 7 1	351 1 3	Ditto ditto.
Andrews, J. ...	1,939 8 5	950 10 0	348 5 8	640 8 9	45 3 3	595 5 6	Ditto ditto.
Albertini Cesar (F. Acerboni & Co.) ...	20,143 7 1	15,348 8 6	2,086 13 1	2,708 1 6	147 3 9	2,560 13 9	Ditto ditto.
Adam Ahmed ...	7,545 1 7	5,330 4 5	1,296 2 3	918 10 11	918 10 11	. . ..	Ditto ditto.
Ashutosh Mookerjee ...	9,052 9 5	.....	6,644 6 6	2,408 2 11	.....	2,408 2 11	Ditto ditto.
Abdool Gunny ...	1,329 13 6	.. ...	7 3 0	1,322 10 6	.....	1,322 10 6	Outstanding: in course of recovery.
Balfour & Co. ...	5,61,316 3 6	3,04,469 3 4	2,55,181 14 1	1,665 2 1	713 10 2	951 7 11	Nothing further recoverable.
Boyd & Co. ...	30,678 14 3	10,773 10 4	13,425 1 11	6,475 2 0	6,364 3 4	110 14 8	Ditto ditto.
Bruce, Shand & Co. ...	8,36,536 3 5	4,96,777 1 0	3,32,316 3 0	7,442 15 5	6,618 1 2	824 14 3	Ditto ditto.
Bodry, John (1st) ...	1,705 7 1	79 1 11	547 6 0	1,078 15 2	582 1 8	496 13 6	Ditto ditto.
Bluett, James ...	873 0 0	40 0 11	222 14 2	610 0 11	610 0 11	.....	Ditto ditto.
Bhoobun Mohan Mitter ...	4,000 0 0	.....	2,163 7 9	1,836 8 3	1,794 12 6	41 11 9	Ditto ditto.
Baboo Lall Shaw and others ...	1,35,530 2 7	88,917 10 9	30,736 10 9	15,875 13 1	15,628 5 1	247 8 0	Ditto ditto.
Buldeo Dass (Buldeo Dass Chuttoorbnooj)	3,802 3 1	1,424 5 4	985 1 6	1,392 12 3	1,386 12 11	5 15 4	Ditto ditto.
Bhore Mull Gondaka ...	16,319 3 6	11,202 10 2	3,226 1 6	1,890 7 10	1,760 10 11	129 12 11	Ditto ditto.
Brunet Salez and Latapie ..	15,235 0 0	8,047 9 5	5,625 0 5	1,562 6 2	1,445 10 8	116 11 6	Ditto ditto.
Bagott, W. N. ...	4,149 4 9	49 3 7	3,498 4 2	601 13 0	392 4 5	209 8 7	Ditto ditto.
Bodry, John (3rd) ...	4,425 4 6	1,112 3 5	2,384 6 10	928 10 3	642 13 0	285 13 3	Ditto ditto.

Bisso Nath Mandel	...	2,220	4	7	.....		.....		2,200	4	7	.....		2,200	4	7	Ditto	ditto.
Belletty, M.	...	6,180	0	0	1,024	13	10	116	13	10	538	4	4	370	9	10	167	10	6	Ditto	ditto.
Bhoobun Mohun Bannerjee and another		1,58,927	12	8	36,824	1	11	1,16,251	7	2	5,852	3	7	5,823	11	6	28	8	1	Ditto	ditto.
Bungshee Dhur Khettry (Nannoo Mull Khettry).		1,04,279	10	2	79,164	14	6	16,555	1	2	8,559	10	6	8,078	2	10	481	7	8	Ditto	ditto.
Bhola Nath Dass	...	8,100	0	0	29	11	2	2,449	11	7	620	9	3	524	5	11	96	3	4	Ditto	ditto.
Beer Chund Coondoo and another	..	2,201	8	3	642	5	2	968	9	6	590	9	7	590	9	7	.....			Ditto	ditto.
Brewcester, C. C., and W. Nicholl (Wilson, Mackenzie & Co.).		794	0	10	.....			.....			794	0	10	.....			794	0	10	Schedule not filed as yet.	
Baker, F. W. (separate account)	...	2,337	15	3	1,010	14	10	123	9	0	1,203	7	5	1,157	14	6	45	8	11	Nothing further recoverable.	
Bheekun Chand Ratty	...	1,452	6	4	857	10	8	74	6	5	520	5	3	286	10	5	239	10	10	Ditto	ditto.
Benode Kanto Nathtuck and another	...	562	13	6	.....			30	15	2	531	14	4	.....			531	14	4	Ditto	ditto.
Bungsheedhur Singania (Kriparam Sookdoyal).		2,849	2	6	157	4	11	1,661	8	10	1,030	4	9	937	2	11	93	1	10	Ditto	ditto.
Bhujendra Bhusun Chatterjee	...	3,580	10	3	893	4	8	629	15	10	2,057	5	9	725	5	5	1,332	0	4	Ditto	ditto.
Beer Nursing Dutt	...	92,826	10	5	7,701	8	10	77,898	10	0	7,226	7	7	2,318	11	2	4,907	12	5	Ditto	ditto.
Bhoyrubdan Boid and another (Bhoyrubdan Lab Chand).		7,705	11	10	5,085	3	9	902	10	0	1,717	14	1	359	12	9	1,358	1	4	Ditto	ditto.
Bucktwar Chand and Balkissen (Johur Mull Bucktwar Chand).		46,315	12	1	20,038	1	11	10,404	12	4	15,872	13	10	10,371	13	1	5,501	0	9	Outstanding: in course of recovery.	
Brij Mohon Dobay	...	23,115	13	3	.....			20,428	5	3	2,687	8	0	.....			2,687	8	0	Ditto	ditto.
Bhoobun Mohun Dass	...	1,698	0	0	354	10	3	71	2	9	1,272	3	0	806	5	5	465	13	7	Nothing further recoverable.	
Balchand Neem Chand	...	3,894	9	0	.....			943	15	6	2,950	9	6	.....			2,950	9	6	Schedule not filed as yet.	
Briggs, W. M.	...	1,360	13	0	117	0	0	37	1	11	1,206	11	1	362	15	0	843	12	1	Nothing further recoverable.	
Barrow, C. F.	...	6,479	7	4	1,928	5	2	293	10	0	4,257	8	2	3,419	4	0	838	4	2	Ditto	ditto.
Bowen, S. W.	...	1,581	7	0	.....			.....			1,581	7	0	.....			1,581	7	0	Ditto	ditto.
Bala Chand Soorana	...	1,575	0	0	.....			.....			1,575	0	0	.....			1,575	0	0	Ditto	ditto
Colvin & Co.	...	1,84,427	8	8	1,36,470	10	10	81,296	10	8	16,660	3	2	6,586	15	0	10,073	4	2	Ditto	ditto.
Cruttenden, Mackillop & Co.	...	99,959	11	1	72,895	6	5	20,263	11	4	6,800	9	4	5,743	13	4	1,056	12	0	Ditto	ditto.
Cockerell & Co.	...	17,19,738	5	0	3,86,102	12	10	13,26,584	4	11	7,046	3	3	6,701	5	10	344	13	5	Ditto	ditto.
Cunnylall Burral and another	...	21,208	5	11	17,472	10	1	2,990	11	5	745	0	5	632	14	3	112	2	2	Ditto	ditto.
Crompton, G. F.	...	5,413	5	4	2,747	14	3	2,124	12	6	540	10	7	487	13	3	52	13	4	Ditto	ditto.
Cannyram, Chooneelall	...	9,623	9	3	5,676	2	8	2,212	5	4	1,735	1	3	1,523	9	7	211	7	8	Ditto	ditto.
Charles, Nephew & Co.	...	5,15,143	12	9	3,99,340	6	4	98,146	12	8	17,656	9	9	15,958	7	10	1,698	1	11	Ditto	ditto.
Castello, M. G.	...	3,201	7	9	2,227	5	6	264	10	2	709	8	1	372	14	3	336	9	10	Ditto	ditto.
Carr, Robert	...	11,349	3	8	9,779	11	7	966	1	8	603	6	5	603	6	5	.....			Ditto	ditto.
Cantopher, Robert	...	907	10	6	196	15	8	167	15	9	542	11	1	542	11	1	.....			Ditto	ditto.
Child, W. C.	...	22,090	10	0	16,599	6	0	4,704	11	10	786	8	2	691	4	8	95	3	6	Ditto	ditto.
Christophoridi, C.	...	5,587	12	2	4,099	9	3	697	9	10	880	9	1	787	10	5	92	14	8	Ditto	ditto.
Cole, George (Perry & Co.)	...	3,018	10	4	1,310	12	1	937	1	11	770	12	4	770	12	4	.....			Ditto	ditto.
Colville, Gilmore & Co.	...	1,77,067	4	8	2,535	0	0	87,866	12	2	86,665	8	6	77,507	15	9	9,157	8	9	Outstanding: in course of recovery.	
Chuttolall Sewprasad	...	44,733	11	0	19,348	5	2	19,610	14	10	5,774	7	0	5,632	1	11	142	5	1	Nothing further recoverable.	
Conti, G. A.	...	3,567	10	8	849	7	7	1,092	4	4	1,625	14	9	383	3	11	1,242	10	10	Ditto	ditto.
Cohen, S. E., and E. E. Cohen	...	1,806	3	0	280	1	10	1,012	9	4	513	7	10	317	12	5	195	11	5	Ditto	ditto.

Estates.	Whole amount of receipts.	Whole Disbursements.		Balance.	Portion of balance applicable to dividends now payable.	Net balance.	Probable outturn of the dependencies.
		Dividends paid.	Other payments.				
	Rs. A. P.	Rs. A. P.	Rs. A. P.	Rs. A. P.	Rs. A. P.	Rs. A. P.	
Chunder Kanto Shaw ...	43,972 1 6	6,315 7 7	36,831 6 6	825 2 5	825 3 5	.....	Nothing further recoverable.
Coleman, C. ...	1,716 8 0	986 7 5	119 3 2	610 13 5	610 13 5	.....	Ditto ditto.
Coverjee Bomanjee ...	985 6 6	157 11 7	59 6 8	768 4 3	690 2 6	78 1 9	Ditto ditto.
Collins, W. R. ...	2,581 6 8	.....	.....	2,581 6 8	.....	2,581 6 8	Ditto ditto.
Clark, A. M. (J. H. Fergusson & Co.) ...	23,198 8 2	12,913 0 9	7,606 9 11	2,678 13 6	1,482 12 5	1,196 1 1	Ditto ditto.
Croft, John Radcliffe, and others (Croft, Wells & Co.).	8,240 11 6	.....	4,704 0 0	3,536 11 6	.....	3,536 11 6	Ditto ditto.
Cohen, J. A. ...	2,603 6 7	.....	1,374 11 7	1,228 11 0	1,160 3 1	68 7 11	Ditto ditto.
Chogmull Chattalall ...	3,237 12 6	589 15 0	1,493 3 4	1,154 10 2	345 10 6	808 15 8	Ditto ditto.
Chand Mull Jurwar Mull ...	9,658 11 6	5,948 5 4	2,457 2 2	1,253 4 0	828 13 10	424 6 2	Ditto ditto.
Choonee Lall Boid and another (Chogmull Maloom Chand).	6,620 14 3	3,196 7 0	1,736 2 0	1,688 5 3	1,435 4 7	253 0 8	Ditto ditto.
Chooneelall Doodhuria ...	1,990 12 3	.....	60 15 3	1,929 13 0	.....	1,929 13 0	Ditto ditto
Cowie David and another (Colvin Cowie & Co.)	1,63,039 10 11	91,447 1 7	64,007 1 4	7,585 8 0	6,904 4 0	681 4 0	Ditto ditto.
Coben, A. A. ...	1,660 2 0	.....	.....	1,660 2 0	.....	1,660 2 0	Ditto ditto.
Dickson, William ...	1,843 0 2	1,039 2 3	297 0 3	506 13 8	506 13 8	.....	Ditto ditto.
Dove, J. M. ...	12,991 0 0	10,202 12 8	2,214 0 8	574 2 8	316 11 4	257 7 4	Ditto ditto.
Dorret Brothers ...	2,164 9 6	34 7 7	1,470 1 6	660 0 5	660 0 5	.....	Ditto ditto.
DeSilva, John Emanuel ...	14,275 15 10	11,131 11 5	894 2 6	2,250 1 11	1,936 3 6	313 14 5	Ditto ditto.
DeSouza, John ...	1,334 0 3	.....	805 9 0	528 7 3	.....	528 7 3	Ditto ditto.
Dumat, Alfred ...	6,224 5 6	1,051 12 9	2,024 3 5	3,148 5 4	2,815 3 0	333 2 4	Ditto ditto.
Durrant, Edward ...	2,223 1 6	816 5 4	890 8 5	516 3 9	479 10 8	36 9 1	Ditto ditto.
Dennison, G. R. ...	29,828 14 7	26,967 6 10	1,607 6 4	1,254 1 5	787 0 0	467 1 5	Ditto ditto.
Duff, David ...	2,137 12 9	1,041 8 5	489 15 9	606 4 7	483 9 4	122 11 3	Ditto ditto.
Deno Nath De ...	12,218 11 11	7,804 8 7	2,315 6 4	2,098 13 0	1,631 1 4	467 11 8	Ditto ditto.
Dwarka Nath Mitter ...	5,938 12 0	731 10 10	4,641 13 5	565 3 9	447 8 9	117 11 0	Ditto ditto.
Deno Nath Paul ...	834 4 3	.....	119 12 9	714 7 6	.....	714 7 6	Ditto ditto.
Damoodur Dass ...	4,018 15 9	1,715 1 4	999 14 6	1,303 15 11	1,160 13 4	143 2 7	Ditto ditto.
Debrunner, Julius ...	65,912 4 7	58,106 7 4	7,188 1 7	617 11 8	491 5 3	126 6 5	Ditto ditto.
Doyal Chand Pyne and others ...	54,590 3 0	174 8 0	52,107 10 5	2,308 0 7	.....	2,308 0 7	Ditto ditto.
Dawood Khan Esabhoy ...	1,797 8 9	31 11 4	1,238 4 7	527 8 10	190 5 0	337 3 10	Ditto ditto.
Debnarain Bysack and another ...	5,691 14 6	3,385 4 9	1,447 4 7	859 5 2	859 5 2	.....	Ditto ditto.
DeSantos, R. J. ...	2,050 7 2	795 0 0	649 1 5	606 5 9	3 11 8	602 10 1	Ditto ditto

Duggan, A. ...	2,400	0	0	531	7	9	123	11	1	1,744	13	2	1,679	14	5	64	14	9	Ditto	ditto.
Dwarka Nath Daw and another ...	7,866	9	6	4,736	7	9	1,980	12	10	1,149	4	11	904	10	3	244	10	8	Ditto	ditto.
Dhurrum Chand (Golab Chand Dhurrum Chand).	22 388	2	10	14,815	9	4	3,184	10	7	4,337	14	11	2,923	14	10	1,414	0	1	Ditto	ditto.
Dover, M. ...	3,435	11	0	250	0	0	1,439	9	1	1,746	1	11	1,393	15	1	352	2	10	Ditto	ditto.
Dhattry Coomar Shaw ...	8,307	9	7	1,272	1	3	1,725	13	0	5,309	11	4	3,202	8	6	2,107	2	10	Ditto	ditto.
Durham, J. R. L. ...	600	0	0	.....			40	0	3	559	15	9	537	13	0	22	2	9	Ditto	ditto.
Durant, W E. ...	3,103	3	9	.....			1,144	14	0	1,958	5	9	.....			1,958	5	9	Outstanding: in course of recovery.	
Debendro Nath Chander (separate account)	1,304	14	10	.. ...			.....			1,304	14	10	.....			1,301	14	10	Ditto	ditto.
Debendro Nath Chunder and another (C. D. Mongas & Co)	511	7	0	.....			... ..			511	7	0	... ..			511	7	0	Ditto	ditto.
Ewing, Aird and Anderson ...	3,11,328	1	8	59,611	6	10	2,42,032	15	9	9,678	11	1	9,516	3	7	162	7	6	Nothing futher recoverable.	
Eilias, M. B. ...	7,233	13	6	3,428	10	7	1,263	15	10	2,541	3	1	2,218	0	3	323	2	10	Ditto	ditto.
Espino, Manuel Del ..	3,800	1	3	1,419	8	11	1,298	6	11	1,082	1	5	935	15	7	146	1	10	Ditto	ditto.
Eagleton, F. A. ...	3,653	3	6	72	11	2	2,841	4	4	939	4	0	446	0	1	293	3	11	Ditto	ditto.
Emmett and Chambers ...	23,491	8	3	7,305	15	2	12.954	13	11	3,230	11	2	581	13	8	2,648	13	6	Ditto	ditto.
Fergusson & Co. ...	1,96,005	7	4	1,48,653	6	2	33,097	7	10	14,254	9	4	11,828	3	11	2,426	5	5	Ditto	ditto.
Fergusson Brothers ...	1,47,924	5	4	68,637	12	4	75,113	15	2	4,172	9	10	3,761	0	8	411	9	2	Ditto	ditto.
Foster, Rogers & Co. ...	6,376	9	10	857	3	7	2,294	7	11	3.224	14	4	2.542	11	8	682	2	8	Ditto	ditto.
Fabian, E. D. ...	776	10	0	263	3	3	.....			513	6	9	... ..			513	6	9	Ditto	ditto.
Ferris, G. R. ...	2,650	0	0	67	7	6	813	2	3	1 769	6	3	1,292	1	6	477	4	9	Ditto	ditto.
Fanshaw, R. F. ...	876	0	10	176	8	6	96	15	1	602	9	3	425	4	7	177	4	8	Ditto	ditto.
Fornaro, C. (Fornaro and Huni) ..	27,288	4	3	17,891	1	4	9,001	15	7	905	3	4	453	12	4	451	7	0	Ditto	ditto.
Forbes, H. T. ...	3,000	0	0	497	8	0	1,248	15	7	1,253	8	5	21	8	0	1 232	0	5	Ditto	ditto.
Freck, D. ...	504	10	6	.....			.....			504	10	6	.....			504	10	6	Ditto	ditto.
Floyd, E. M. ...	614	0	9	.....			.....			614	0	9	.....			614	0	9	Ditto	ditto.
Gilmore & Co. ..	47.267	5	4	23,186	11	8	19,717	10	7	4,362	15	1	.. ...			4,362	15	1	Ditto	ditto.
Griffiths, Curtis & Co. ...	49,784	9	8	23,262	15	3	19,201	1	0	7,320	9	5	6,991	13	5	328	12	0	Ditto	ditto.
Gordon, Stewart & Co. ...	78.183	10	4	39,924	6	8	35,568	12	4	2,690	7	4	2,632	0	10	58	6	6	Ditto	ditto.
Gubboy, A. J. ...	9,055	7	0	6,088	9	2	2.075	4	0	891	9	10	565	5	11	326	3	11	Ditto	ditto.
Gocool Doss Soonderjee ..	18.266	14	1	11,879	7	1	5,760	12	11	626	10	1	584	4	8	42	5	5	Ditto	ditto.
Golaub Chand Hemchand ...	1,586	2	0	.....			200	9	0	1,385	9	0	.....			1,385	9	0	Ditto	ditto.
Goberdhone Mullick ...	2.880	14	9	1.371	10	5	963	12	4	545	8	0	473	12	3	71	11	9	Ditto	ditto.
Golam Hossain Virjee ...	1,26,756	14	4	40,928	6	8	85,314	2	4	514	5	4	318	1	0	196	4	4	Ditto	ditto.
Ghose & Co., R. G. ...	29,911	1	2	21,218	2	4	7,954	3	8	738	11	2	536	2	0	202	9	2	Ditto	ditto.
Gregory, M. ...	17,186	2	5	12,174	13	6	4,154	14	4	856	6	7	717	5	5	139	1	2	Ditto	ditto.
Ghaseeram ...	38,350	5	10	10,535	5	6	25,967	15	3	1,847	1	1	1,231	11	2	615	5	11	Ditto	ditto.
Gasper, N. M. ...	7,010	0	9	4,872	0	8	657	12	0	1,480	4	1	1,188	9	1	291	11	0	Ditto	ditto.
Gilmour, J. A. G. ...	512	8	0	.. ..			.....			512	8	0	.. ...			512	8	0	Ditto	ditto.
Gubboy, E. S. ...	53,783	3	0	17,176	15	8	36,070	3	1	536	0	3	432	14	9	103	1	6	Ditto	ditto.
Greedharylall Kanylall ...	26,621	12	4	15,961	3	1	3,418	3	4	7,242	5	11	7,242	5	11	.....			Ditto	ditto.
Gopal Chunder Bose ...	3,891	0	0	2,267	1	4	876	10	0	747	4	8	535	8	6	211	12	2	Ditto	ditto.
Gobin Chand Doogur and Setab Chand (Nunsee Inder Chand).	1,07,816	2	7	59,589	6	4	41,217	9	11	7,059	2	4	7,059	2	4	.....			Ditto	ditto.

Estates	Whole amount of receipts.	Whole Disbursements.		Balance.	Portion of balance applicable to dividends now payable.	Net balance.	Probable outturn of the dependencies.
		Dividends paid.	Other payments.				
	Rs. A. P.	Rs. A. P.	Rs. A. P.	Rs. A. P.	Rs. A. P.	Rs. A. P.	
Gray, Walter and another (Robert and Charrall).	3,14,768 4 0	2,09,594 14 1	42,148 3 10	63,025 2 1	54,570 0 10	8,455 1 3	Nothing further recoverable.
Grish Chunder Marrick and others ...	13,956 0 5	5,818 11 2	5,481 2 2	2,653 3 1	1,776 13 7	879 5 6	Ditto ditto.
Gopal Chunder Rage ...	2,834 15 3	1,516 0 3	813 12 3	505 2 9	505 2 9	.....	Ditto ditto.
Greedharee Lall Sadkhan and Cally Churn Sadkhan.	6,246 6 0	400 9 6	4,991 13 2	853 15 4	374 1 3	479 14 1	Ditto ditto.
Gosto Behary Seal ...	34,539 14 3	13,925 9 11	19,941 2 7	673 1 9	558 9 10	114 7 11	Ditto ditto.
Gopee Kanto Sen ...	986 14 1	.....	358 6 0	628 8 1	.....	628 8 1	Ditto ditto.
Gobindram and another ...	7,414 13 3	4,326 1 10	1,957 10 11	1,131 0 6	1,131 0 6	.....	Ditto ditto.
Gobin Dass and another ...	2,048 13 9	60 2 2	1,270 14 1	717 13 6	575 3 7	142 9 11	Ditto ditto.
Golabroy & anr. (Kally Sahai Golabroy)	13,975 10 11	7,903 10 6	3,102 8 0	2 961 8 5	2,767 15 11	196 8 6	Ditto ditto.
Ghunesham Das Chandgotia (Jugger Nath Sirdar Mull).	24,540 2 1	6,377 6 11	3,346 6 5	14,816 4 9	4 127 3 8	10,689 1 1	Ditto ditto.
Gungaram Domany ...	2,183 2 9	234 0 1	1,253 13 8	695 5 0	274 12 2	420 8 10	Ditto ditto.
Gobindas Domany ..	14,329 10 9	1,319 1 8	12,383 12 4	626 12 9	230 15 4	395 13 5	Ditto ditto.
Griffiths, O. B. (W. Moran & Co.) ...	4,81,552 2 3	1,86,077 2 2	2,24,394 5 1	71,080 11 0	2,360 0 10	68,720 10 2	Outstanding: in course of recovery.
Griffiths, O. B. (separate account) ...	11,820 7 0	6,861 10 9	356 13 4	4,601 14 11	.....	4,601 14 11	Nothing further recoverable.
Girindra Nath Dass ...	17,035 2 9	.....	9,771 0 9	7,264 2 0	.....	7,264 2 0	Ditto ditto.
Gopal Dass Mukerjee ...	635 12 6	.....	104 2 8	531 9 10	.....	531 9 10	Ditto ditto.
Gouri Dutt Mooraly Dhur ...	3,601 13 6	.....	1,626 0 0	1,975 13 6	.....	1,975 13 6	Ditto ditto.
Gungadhur and others ...	1,806 3 9	.. ...	377 9 0	1,428 10 9	.....	1,428 10 9	Outstanding: in course of recovery
Hurry, W. C. ...	2,763 9 2	.....	1,937 14 8	825 10 6	.. ...	825 10 6	Nothing further recoverable.
Hoffmann & Co. ...	25,170 12 5	6,933 13 3	17,650 8 0	586 7 2	356 3 4	230 3 10	Ditto ditto.
Hughesdon Brothers ...	2,44,226 5 7	39,290 4 8	2,04,248 13 9	687 3 2	542 5 9	144 13 5	Ditto ditto.
Hudson, Nathaniel ...	2,225 11 3	655 5 6	461 2 1	1,109 3 8	936 15 2	172 4 6	Ditto ditto.
Hoppe, William ...	1,346 8 6	2 0 0	672 1 1	672 7 5	613 3 1	59 4 4	Ditto ditto.
Huffnagle & Co., Charles ..	1,320 4 7	74 9 3	342 4 1	903 7 3	821 11 2	81 12 1	Ditto ditto.
Heeralall Hunnuntoram ...	752 14 3	.....	61 0 0	691 14 3	.....	691 14 3	Ditto ditto.
Halloway, William ..	1,055 11 11	76 8 8	324 8 7	654 10 8	614 10 6	40 0 2	Ditto ditto.
Honigberger, William ...	1,001 5 6	.....	344 0 0	657 5 6	.....	657 5 6	Schedule not filed as yet.
Hanlon, E. ...	2,069 9 0	152 2 2	1,191 9 4	725 13 6	725 13 6	... ..	Nothing further recoverable.
Howard Brothers ...	10,421 9 10	6,168 12 7	3,394 13 6	857 15 9	630 5 0	227 10 9	Ditto ditto.
Hill, James (Berham, Hill & Co.) ...	32,114 9 9	17,374 4 0	10,861 5 8	3,879 0 1	3,489 8 4	389 7 9	Ditto ditto.
Hurry Narain Khettry ...	10,178 5 9	4,209 9 3	3,808 13 1	2,159 15 5	2,095 4 6	64 10 11	Ditto ditto.
Huckting & Co., B. H. ...	4,872 5 3	2,018 15 3	1,846 12 9	1,006 9 3	939 13 7	66 11 8	Ditto ditto.
Hutcheson, J. H. (L. W. Toulmin & Co.)	4,326 0 3	2,036 15 8	507 9 0	1,781 7 7	1,442 7 11	338 15 8	Ditto ditto.
Heeralall (Heeralall, Munnoolall) ...	19,704 0 3	8,519 10 5	7,122 11 3	4,061 10 7	4,061 10 7	.....	Ditto ditto.

Hubbard, C. E. ...	4,154 2 8	2,265 9 3	698 0 2	1,190 9 3	1,190 9 3	......	Ditto	ditto.
Heeralall Doodhooriah ...	2,965 14 3	1,498 4 4	357 4 10	1,110 5 1	395 1 10	715 3 3	Ditto	ditto.
Hay, William (Stuart & Co.) ...	1,999 10 3	......	1,002 3 9	997 6 6	......	997 6 6	Ditto	ditto.
Heeranund (Budder Mull Heeranund) ...	1,212 15 3	607 15 1	83 2 1	516 14 1	442 3 11	74 10 2	Ditto	ditto.
Hurro Nauth Mozumdar and others ...	7,700 0 0	3,516 2 0	2,306 7 5	1,877 6 7	1,877 6 7	......	Ditto	ditto.
Hadjee Bidiatoollah and others ...	1,25,835 9 8	1,03,783 4 5	17,809 4 8	7,243 0 7	7,200 12 4	42 4 3	Ditto	ditto.
Hurruck Chand and Johoory Mull (Kanyelall Hurruck Chand).	12,671 6 0	11,277 7 0	753 15 4	639 15 8	162 4 4	477 11 4	Ditto	ditto.
Hadjee Noor Mahomed Jackeriah ...	1,68,850 9 4	1,07,717 1 0	50,944 7 2	10,189 1 2	5,771 6 7	4,417 10 7	Ditto	ditto.
Heins, Geo. (C. Gould & Co.) ...	12,502 2 11	8,061 15 0	3,726 2 0	714 1 11	579 14 4	134 3 7	Ditto	ditto.
Heeralall Addy ...	1,521 15 11	......	360 6 10	1,161 9 1	......	1,161 9 1	Ditto	ditto.
Hogg, Thos. (Beak & Co.) ...	1,238 13 0	......	6 12 0	1,232 1 0	......	1,232 1 0	Outstanding: in course of recovery.	
Hurro Nath Shaw ...	20,921 7 4	9,878 1 6	5,592 12 11	5,450 8 11	1,445 0 0	4,005 8 11	Nothing further recoverable.	
Hadji Sallay Mahomed Ellias ...	2,341 4 1	1,320 4 8	128 12 3	892 3 2	730 2 7	162 0 7	Ditto	ditto.
Herbert, W. J. E. ...	1,200 0 0	346 8 11	68 10 7	784 12 6	764 3 9	20 8 9	Ditto	ditto.
Hurry Churn Dey, No. 2 ...	1,623 0 9	......	111 4 10	1,511 11 11	......	1,511 11 11	Ditto	ditto.
Issur Chunder Mill ...	8,546 1 6	506 12 3	6,175 1 7	1,864 3 8	1,864 3 8	......	Ditto	ditto.
Issen Chunder Sen ...	12,037 10 9	5,835 13 1	5,633 6 0	568 7 8	568 7 8	......	Ditto	ditto.
Issur Chunder Sen and another ..	631 14 9	23 7 1	101 0 2	507 7 6	507 7 6	......	Ditto	ditto.
Issur Dass Jugger Nath ...	75,817 5 11	61,397 1 0	11,124 12 9	3,295 8 2	1,619 2 1	1,676 6 1	Ditto	ditto.
Issory Prosad and others ...	664 7 0	......	7 10 6	656 12 6	......	656 12 6	Ditto	ditto.
Jansen & Co. ...	20,002 10 9	139 11 5	15,872 5 0	3,990 10 4	3,766 5 1	224 5 3	Ditto	ditto.
Juggessor Laha ...	34,388 4 1	16,701 4 2	15,519 2 4	2,167 13 7	1,851 6 1	316 7 6	Ditto	ditto.
Jordon, J. S. ...	5,376 8 0	3,582 9 6	984 15 5	808 15 1	545 0 7	263 14 6	Ditto	ditto.
Juggunpersad ...	960 8 9	......	223 9 0	736 15 9	......	736 15 9	Ditto	ditto.
Jacob, Charles ..	933 8 0	......	415 13 4	517 10 8	454 6 7	63 4 1	Ditto	ditto.
Jadub Chunder Seal ..	2,094 6 7	374 1 10	907 2 9	813 2 0	580 12 8	232 5 4	Ditto	ditto.
Juddah, S. E. ..	2,186 15 0	......	1,450 4 7	736 10 5	643 2 11	93 7 6	Ditto	ditto.
Johurlall Mookim ...	1,656 0 0	648 15 0	262 4 7	744 12 5	373 13 9	370 14 8	Ditto	ditto.
Joakim, M. C. ...	7,754 15 3	4,223 8 11	2,422 12 5	1,108 9 11	838 9 7	270 0 4	Ditto	ditto.
Jaitroop Chooneylall ...	8,292 7 2	5,458 4 10	2,081 8 11	752 9 5	752 9 5	......	Ditto	ditto.
Joogul Kissore Sewlall Futteh Chand ...	9,544 8 6	5,950 3 1	2,262 11 9	1,331 9 8	1,051 7 2	280 2 6	Ditto	ditto.
Jogendra Nauth Cowar ...	5,958 0 0	1,391 15 3	3,577 14 3	988 2 6	806 0 9	182 1 9	Ditto	ditto.
Jores Mull Begamy and another ...	918 15 6	......	71 8 0	847 7 6	......	847 7 6	Ditto	ditto.
Jeebun Coomari Bibee ...	1,46,821 0 5	89,822 13 2	29,419 5 5	27,578 13 10	18,060 8 0	9,518 5 10	Ditto	ditto.
Johury Lall Paul and another ...	85,142 3 8	40,808 4 1	30,068 1 1	14,265 14 6	12,996 8 8	1,269 5 10	Outstanding: in course of recovery.	
Jumna Dass ...	3,315 4 6	992 9 7	1,516 5 1	806 5 10	771 9 4	34 12 6	Nothing further recoverable.	
Jewanram and another ...	39,704 3 5	24,616 10 6	9,162 9 9	5,924 15 2	266 14 6	5,658 0 8	Ditto	ditto.
Kemp, H. C. (T. Hyde, Gardiner & Co.)	33,765 12 9	27,374 0 2	5,817 5 1	574 7 6	135 0 4	439 7 2	Ditto	ditto.
Khan Mahomed Dhurrumsee ..	55,247 9 1	33,008 1 8	11,149 7 7	11,089 15 10	1,312 7 6	9,777 8 4	Ditto	ditto.
Kissory Mohun Chunder ...	3,300 0 0	2,025 2 4	269 4 2	1,005 9 6	590 11 9	414 13 9	Ditto	ditto
Kally Dass Dass and others ...	73,719 13 5	22,069 12 6	46,591 2 0	5,058 14 11	2,359 4 2	2,699 10 9	Ditto	ditto.
Kullianjee Soonderjee (Soonderjee, Walljee & Co.).	12,414 6 0	2,351 3 3	6,936 8 0	3,156 10 9	3,093 13 10	62 12 11	Ditto	ditto.

Estates.	Whole amount of receipts.	Whole Disbursements.		Balance.	Portion of balance applicable to dividends now payable.	Net balance.	Probable outturn of the dependencies
		Dividends paid.	Other payments.				
	Rs. A. P.	Rs. A. P.	Rs. A. P.	Rs. A. P.	Rs. A. P.	Rs. A. P.	
Khetter Mohun Chatterjee ...	2 371 8 9	.....	1,201 0 5	1,170 8 4	.....	1,170 8 4	Nothing further recoverable.
Kelly, H. ...	6,800 9 3	4,090 4 11	2,136 11 5	573 8 11	495 2 4	78 6 7	Ditto ditto
Kemp, H. C. ...	2,469 15 10	168 12 6	436 2 5	1,865 0 11	1,600 0 0	265 0 11	Ditto ditto.
Kissen Chand Goleecha (Obhoyram Kissen Chand).	2,43,271 1 11	1,38,446 8 4	96,486 11 0	8,337 14 7	5,641 11 10	2,696 2 9	Ditto ditto.
Kally Churn Roy ...	510 0 0	.....	4 0 0	506 0 0	.....	506 0 0	Ditto ditto.
Kherter Mohun Dass ...	1,133 8 5	.....	456 2 0	677 6 5	.....	677 6 5	Ditto ditto.
Kally Prasanna Bhattacherjee ...	2,327 11 0	.....	796 7 10	1,531 3 2	.....	1,531 3 2	Ditto ditto.
Keyser Shahebzada Mohamed ...	5,925 0 0	4,687 12 10	564 8 11	672 10 3	662 5 0	10 5 3	Ditto ditto.
Kasim Arif Bham ...	796 9 3	.....	257 8 0	539 1 3	.....	539 1 3	Ditto ditto.
Kirtybas Paul and another (Annoda Prasad Banerjee and others). ...	3,976 9 3	.....	2,640 7 7	1,336 1 8	.....	1,336 1 8	Ditto ditto.
Kally Churn Ghose ...	9,432 9 3	4,998 6 1	3,120 12 9	1,313 6 5	744 8 3	568 14 2	Ditto ditto.
Koylas Chunder Sreemany and others ...	43,215 8 5	12,468 6 4	29,651 8 7	1,095 9 6	783 8 0	312 1 6	Ditto ditto.
King, Loraine ...	8,268 1 11	6,657 1 11	777 3 6	833 12 6	667 11 3	166 1 3	Ditto ditto.
Krieg & Co. ...	4,858 9 2	2,190 2 9	1,186 9 8	1,481 12 9	308 5 7	1,173 7 2	Ditto ditto.
Kallypado Nundy ...	660 12 3	.....	139 9 0	521 3 3	.....	521 3 3	Ditto ditto.
Kissory Chand Sheremull ...	5,756 10 5	2,016 3 1	2,180 1 7	1,560 5 9	1,210 2 9	350 3 0	Ditto ditto.
Kalooram Behaniwallah ...	1,740 7 3	89 4 6	860 9 11	790 8 10	790 8 10	. ...	Ditto ditto.
Kapp, F. ...	942 13 10	.. ...	428 14 0	513 15 10	. ....	513 15 10	Ditto ditto.
Kristolall Dhur ...	1,160 14 0	447 10 8	81 12 9	631 6 7	631 6 7	... ..	Ditto ditto.
Kashi Prosaud Luchmenarain ...	2,750 0 0	.. ...	...	2,750 0 0	.....	2.750 0 0	Ditto ditto.
Kuloda Prosono Ghose ...	2,640 4 0	.....	2 0 0	2,638 4 0	.....	2,638 4 0	Ditto ditto.
Kanhya Lall Daga ...	2,138 13 4	.....	5 12 0	2,133 1 4	.....	2,133 1 4	Outstanding: in course of recovery.
Kalooram Heerawal (Heera Lall Sohun Lall).	754 3 5	... ..	43 5 4	710 14 1	.....	710 14 1	Ditto ditto.
Lyall, Mathewson & Co. ..	3,68,485 13 8	2,81,882 10 8	84,883 12 0	1,719 7 0	1,285 5 1	434 1 11	Nothing further recoverable.
Larpent, Saunders & Co. ...	80,893 0 4	42,900 8 0	22,836 4 7	15,156 3 9	12,631 12 0	2,524 7 9	Ditto ditto
Larmour, F. D. A. (separate account) ...	1,170 8 0	.....	.....	1,170 8 0	.....	1,170 8 0	Ditto ditto.
Langlois & Co. ...	33,718 2 8	1,620 6 4	23,592 8 7	8,505 3 9	8,170 3 9	335 0 0	Ditto ditto.
Letourneux, Labadie & Co. ...	7,483 10 3	1,098 13 8	5,463 14 7	920 14 0	538 7 3	382 6 9	Ditto ditto.
Luke Hamill & Co. ...	6,527 12 4	595 0 8	2,343 0 4	3,589 11 4	3,244 15 2	344 12 2	Ditto ditto.
Latapie, E. D. (2nd) ...	3,982 6 2	12 0 2	3,079 2 10	891 3 2	795 10 5	95 8 9	Ditto ditto.
Landeman, J. V. ...	1,008 10 5	234 3 6	243 15 10	530 7 1	480 12 4	49 10 9	Ditto ditto.
Lindsay, D. B. ...	1,430 3 0	.....	557 4 0	872 15 0	.....	872 15 0	Ditto ditto.
Ledlie, A. H. (2nd) ...	1,654 8 7	180 6 6	658 12 11	815 5 2	52 8 2	762 13 0	Ditto ditto.

Lutchmenarain Khettry	...	1,726	9	9	429	2	0	617	3	6	680	4	3	411	14	8	268	5	7	Ditto ditto.
Langlois, J. P.	...	1,448	12	0	.....			532	0	0	916	12	0	.....			916	12	0	Ditto ditto.
Loke Nath Shaw	...	8,323	8	6	5,175	6	2	2,494	13	6	653	4	10	653	4	10	... ..			Ditto ditto.
Latapie, E. D., & Co.	...	2,444	10	6	286	6	6	487	6	0	1,670	14	0	1,557	12	4	113	1	8	Ditto ditto.
Leisk, A. H. S. (2nd)	...	885	8	11	143	0	0	69	0	4	673	8	7	200	0	0	473	8	7	Ditto ditto.
Linjeebhoy Dhunjeebhoy	...	4,781	8	5	2,836	15	7	992	9	8	951	15	2	951	15	2	... ..			Ditto ditto.
Lyall, R. A., and another (Lyall, Rennie & Co.).		3,60,219	2	3	3,06,074	15	5	50,755	7	1	3,388	11	9	2,712	7	11	676	8	10	Ditto ditto.
Leitch, J. K. (Kerr, Leitch & Co.)	...	1,853	3	0	588	2	9	520	14	6	744	1	9	51	13	3	692	4	6	Ditto ditto.
Larmour, C. F., and another (C. Lazarus & Co.).		6,750	8	5	.....			5,735	4	3	1,015	4	2	.....			1,015	4	2	Ditto ditto.
Leozander & Co.	...	37,331	4	11	30,200	7	9	5,639	10	3	1,491	2	11	905	15	4	585	3	7	Ditto ditto.
Lehzen, E. F. W. (Marquardt, Lehzen & Co.).		17,282	10	0	12,483	10	5	3,369	13	3	1,429	2	4	312	10	3	1,116	8	1	Ditto ditto.
Lekram Buldeo Dass	...	14,468	5	3	8,514	6	6	3,680	7	7	2,273	7	2	685	7	6	1,587	15	8	Ditto ditto.
Larmour, C. F. (separate account)	...	2,822	12	2	.....			25	6	6	2,797	5	8	.....			2,797	5	8	Ditto ditto.
Leckie, Thomas	...	1,010	1	6	.....			171	8	0	838	9	6	.....			838	9	6	Ditto ditto.
Mackintosh & Co.	...	2,28,494	11	9	1,24,788	3	2	77,432	6	5	26,274	2	4	24,413	1	2	1,861	1	2	Ditto ditto.
Macleod, Fagan & Co.	...	17,631	7	7	6,841	8	1	10,248	13	1	541	2	5	8	6	7	532	11	10	Ditto ditto.
Macgregor, Hunter & Co.	...	10,719	11	10	.....			9,875	11	3	844	0	7	.....			844	0	7	Ditto ditto.
Mackey & Co., D. C.	...	1,17,362	7	8	58,372	14	3	41,916	2	8	17,073	6	9	17,064	9	3	8	13	6	Ditto ditto.
Minto & Co., William	...	9,560	5	4	3,938	0	5	2,759	2	7	2,863	2	4	2,863	2	4	.....			Ditto ditto.
Martin, Pillan & Co.	...	96,154	3	7	19,123	12	4	71,924	2	4	5,106	4	11	5,078	15	2	27	5	9	Ditto ditto.
Maclean, L. A.	...	885	4	9	18	8	8	342	2	8	524	9	5	430	15	10	93	9	7	Ditto ditto.
Morris, James (Senior)	...	662	6	9	.....			146	0	0	516	6	9	.....			516	6	9	Ditto ditto.
Melville, William	...	1,868	8	8	.....			359	4	6	1,509	4	2	1,339	13	7	169	6	7	Ditto ditto.
Menteith, John	...	821	0	3	20	12	0	189	4	0	611	0	3	.....			611	0	3	Ditto ditto.
Murdock, Mackenzie & Co.	...	5,598	2	8	17	10	1	5,037	6	4	543	2	3	458	0	8	85	1	7	Ditto ditto.
Meyers, A. J.	...	8,876	3	6	4,248	9	10	2,804	7	10	1,823	1	10	1,580	10	0	242	7	10	Ditto ditto.
Meer Dawood Ally	...	3,044	0	2	1,459	8	0	229	14	5	1,354	14	9	1,191	12	2	163	2	7	Ditto ditto.
Munnoolall	...	1,410	4	10	.....			647	10	7	762	10	3	.....			762	10	3	Ditto ditto.
Muddonjee Dhurrumsee	...	880	0	2	.....			68	9	6	811	6	8	472	10	8	338	12	0	Ditto ditto.
Michael, J. C. (3rd)	...	10,225	7	0	7,099	4	9	1,573	8	10	1,552	9	5	1,406	12	10	145	12	7	Outstanding: in course of recovery.
Mohamed Mamood Shah Shahibzada	...	16,074	5	7	10,017	10	7	1,496	13	0	4,559	14	0	712	8	0	3,847	6	0	Nothing further recoverable.
Morgan, C.	...	1,978	6	3	685	1	2	200	1	11	1,093	3	2	813	3	5	279	15	9	Ditto ditto.
Murray, James (Black and Muray)	...	14,154	7	2	9,637	3	3	2,570	12	5	1,946	7	6	1,927	7	8	18	15	10	Ditto ditto.
Mugneeram	...	4,227	6	6	1,405	6	1	2,040	11	0	781	5	5	695	14	0	85	7	5	Ditto ditto.
Modhusudun Dutt, No. 2	...	8,150	7	5	6,026	15	11	1,224	7	5	899	0	1	896	9	3	2	6	10	Ditto ditto.
Mudhusoodun Pyne	...	1,762	10	1	.....			203	11	0	1,558	15	1	.....			1,558	15	1	Schedule not filed as yet.
Marshall Brothers	...	12,811	4	11	6,749	8	9	4,650	2	0	1,411	10	2	1,294	8	4	117	1	10	Nothing further recoverable.
Mangos, C. D.	...	13,687	12	10	4,643	6	11	8,055	1	1	989	4	10	858	0	9	131	4	1	Ditto ditto.
Martin, J. C.	...	2,327	4	4	840	6	5	159	13	4	1,327	0	7	1,239	1	1	87	15	6	Ditto ditto.
Mohamed Baker Aga	...	2,098	2	9	1,032	11	3	432	2	10	633	4	8	534	8	1	98	12	7	Ditto ditto.
Megraj Borah Chogemull Kootary (Megraj Chogemull).		11,487	2	8	7,885	9	6	2,352	5	0	1,249	4	2	1,133	4	11	115	15	3	Ditto ditto.

Estates.	Whole amount of receipts.	Whole Disbursements.		Balance.	Portion of balance applicable to dividends now payable.	Net balance.	Probable outturn of the dependencies.
		Dividends paid.	Other payments.				
	Rs. A. P.	Rs. A. P.	Rs. A. P.	Rs. A. P.	Rs. A. P.	Rs. A. P.	
McArthur, James ...	1,119 15 6	.....	62 14 8	1,057 0 10	965 14 3	91 2 7	Nothing further recoverable.
McKay, W. R. ...	864 6 6	122 7 4	23 14 6	718 0 8	146 1 6	571 15 2	Ditto ditto.
Mohabharut Roy ...	10,914 8 0	.....	4,062 1 0	6,852 7 0	.....	6,852 7 0	Ditto ditto.
Moorallydhur Bungsheedhur ...	10,977 9 11	5,374 6 2	4 453 11 6	1,149 8 3	1,039 13 4	109 10 11	Ditto ditto.
Muddun Mohun Dey and another ...	40,990 4 2	34,781 7 11	5,687 12 8	520 15 7	437 6 4	83 9 3	Ditto ditto.
Mohendra Nath Bose ...	3,094 3 9	.....	2,421 8 5	672 11 4	.....	672 11 4	Ditto ditto
Makhunlall Sett ...	3,120 11 5	.....	1,681 10 7	1,439 0 10	.....	1,439 0 10	Ditto ditto.
Mason, W. M.	594 8 6	.....	0 9 0	593 15 6	.....	593 15 6	Ditto ditto.
Minna Mull ...	7,814 3 10	4,491 15 10	2,283 3 2	1,039 0 10	1,009 5 11	29 10 11	Ditto ditto.
Mohendra Nath Mullick ...	9,662 3 3	4,460 9 6	4,084 5 7	1,117 4 2	829 7 1	287 13 1	Ditto ditto.
Mohamed Bhoy ...	3,774 9 10	1,503 12 10	1,533 8 1	737 4 11	586 1 7	151 3 4	Ditto ditto.
Moolchand and Jesraj ..	7,691 13 11	3,879 1 4	2,290 12 5	1,522 0 2	1,028 2 4	493 13 10	Ditto ditto.
Mohamed Moosajee Atea ...	3,432 14 7	78 6 11	2,638 9 4	715 14 4	485 3 9	230 10 7	Ditto ditto.
Murdock, James (separate account) ...	66,289 0 9	54,572 10 0	2,860 4 1	8,856 2 8	.....	8,856 2 8	Ditto ditto.
Moran, S. (separate account) ...	60,401 2 3	56,169 0 4	2,940 1 2	1,292 0 9	.....	1,292 0 9	Ditto ditto.
Meyers, F. ...	1,263 13 6	.....	139 0 0	1,124 13 6	.....	1,124 13 6	Ditto ditto.
Macdonald, Daniel ...	1,691 14 2	247 8 0	589 13 2	854 9 0	609 11 3	244 13 9	Ditto ditto.
Martin, William ...	2,106 11 8	75 0 0	552 6 2	1,479 5 6	1,425 0 0	54 5 6	Ditto ditto.
Michael, J. C. (2nd) ...	7,760 12 8	5,358 3 5	1,869 3 4	533 5 11	.....	533 5 11	Ditto ditto.
Meddlecoat, J. H. P. ...	1,011 14 6	111 7 11	98 14 5	801 8 2	579 6 5	222 1 9	Ditto ditto.
Meik, George ...	525 0 0	.....	.....	525 0 0	.....	525 0 0	Ditto ditto.
Nursing Chunder Bose ...	1,030 0 0	.....	202 11 0	827 5 0	.....	827 5 0	Ditto ditto.
Nyss, John ...	750 2 11	.....	171 4 0	578 14 11	.....	578 14 11	Ditto ditto.
Nemai Churn Bysack ...	1,210 13 0	.....	428 5 4	782 7 8	696 8 1	85 15 7	Ditto ditto.
Norman Brothers ...	19,569 14 7	9,267 15 3	5,906 1 4	4,395 14 0	4,395 14 0	.....	Ditto ditto.
Nobin Kristo Ghose ...	2,450 0 0	617 3 1	536 10 3	1,296 2 8	1,063 3 1	232 15 7	Ditto ditto.
Nundolall Shaw and Anuntolall Shaw ...	1,950 0 0	.....	249 6 6	1,700 9 6	.....	1,700 9 6	Ditto ditto.
Narain Sing & Co. ...	32,007 6 11	18,805 8 7	9,718 1 2	3,483 13 2	3,424 11 7	59 1 7	Ditto ditto.
Nicol, J. Dyce ...	23,409 1 11	9,527 9 10	5,556 0 4	8,325 7 9	1,549 5 8	6,776 2 1	Ditto ditto.
Nilcomole Mitter ...	500 0 0	.....	.....	500 0 0	.....	500 0 0	Ditto ditto.
Nicholls, W., and another (W. Nicholls & Co.).	18,841 1 4	13,296 2 7	4,261 1 2	1,283 13 7	947 14 10	335 14 9	Ditto ditto.
Nobin Chunder Dey ...	1,375 1 7	542 8 0	247 1 10	585 7 9	585 7 9	.....	Ditto ditto.
Narain Sing and Dhunput Sing ...	2,443 7 5	716 14 10	1,225 13 4	500 11 3	403 4 8	97 6 7	Ditto ditto.
Nilmadhub Shaw and Brothers ...	639 13 7	.....	127 12 9	512 0 10	.....	512 0 10	Ditto ditto.
Nicholas, J. D. (Kelly & Co.) ...	12,300 9 3	5,409 12 1	2,307 11 6	4,583 1 8	2,371 14 8	2,211 3 0	Ditto ditto.

Nooncurn Mull and others (Nooncurn Mull Surutram).	11,775	11	9	8,535	15	4	2,351	7	6	888	4	11	808	1	8	80	3	3	Ditto	ditto.
Nagendra Nath Sen ...	1,199	10	6	.....			128	4	0	1,071	6	6	.....			1,071	6	6	Ditto	ditto.
Owen, Adhuson & Co. ...	29,891	0	9	794	12	2	25,800	15	4	3,295	4	8	3,163	15	10	131	4	10	Ditto	ditto
Oliva, L. B. ...	23,729	2	7	17,569	15	0	5,445	11	5	713	8	2	.....			713	8	2	Ditto	ditto.
Ogle & Co., John ...	2,03,140	10	8	1,56,004	1	7	31,309	4	11	15,827	4	2	15,462	10	5	364	9	9	Ditto	ditto.
Obhoy Churn Dutt ...	1,127	0	6	487	9	9	137	0	0	502	6	9	.....			502	6	9	Ditto	ditto.
Obhoyram Baddree Chand ...	1,910	9	0	.....			372	14	6	1,537	10	6	.....			1,537	10	6	Ditto	ditto.
Ord, W. K. ...	679	8	4	57	7	10	53	4	9	568	11	9	503	11	10	64	15	11	Ditto	ditto.
Ord, William (Murdock & Co.) ...	3,515	2	3	.....			2,944	14	7	570	3	8	511	1	0	59	2	8	Ditto	ditto.
O'Neil, Thomas ...	1,510	13	8	.....			671	3	1	839	10	7	465	9	6	374	1	1	Ditto	ditto.
Omrao Sing ...	2,747	15	11	1,845	11	8	391	9	2	510	11	1	352	14	1	157	13	0	Ditto	ditto.
Osman Gunny ...	1,892	8	0	.....			982	0	3	910	7	9	.....			910	7	9	Outstanding : in course of recovery.	
Palmer & Co. ...	5,69,984	6	1	4,01,103	3	11	1,67,389	8	10	1,491	9	4	542	6	10	949	2	6	Nothing further recoverable.	
Palmer, John ...	7,707	7	11	6,152	6	4	1,001	11	3	553	6	4	542	0	9	11	5	7	Ditto	ditto.
Palmer, Thomas ...	1,473	0	0	.....			887	4	9	585	11	3	.....			585	11	3	Ditto	ditto.
Pew, P. L. ...	52,965	13	1	34,068	0	5	12,875	1	11	6,022	10	9	5,847	11	2	174	15	7	Ditto	ditto.
Parry, John ...	4,996	8	11	1,744	7	6	1,616	0	2	1,636	1	3	1,549	15	9	86	1	6	Ditto	ditto.
Price, Henry ...	15,380	1	3	.....			14,642	1	8	737	15	7	660	5	9	77	9	10	Ditto	ditto.
Posner, J. ...	7,075	8	6	2,972	1	0	3,003	4	3	1,100	3	3	806	10	9	293	8	6	Ditto	ditto.
Phillips, John ...	4,156	0	0	10	11	8	248	10	5	3,896	9	11	1,501	10	4	2,394	15	7	Ditto	ditto.
Phillips, DeRahee G. W. ...	1,260	0	0	538	14	4	98	9	5	622	8	3	562	4	3	60	4	0	Ditto	ditto.
Prasana Kumar Bannerji ...	1,241	0	0	.....			325	2	0	915	14	0	.....			915	14	0	Ditto	ditto.
Prosun Chand Galeecha (Dhurrum Chand Poorun Chand).	96,847	4	1	42,332	11	4	33,592	7	0	20,922	1	9	19,981	12	7	940	5	2	Ditto	ditto.
Punchanon Dass Munglechand (Hatee Sing Sooraj Mull Munglechand).	6,183	14	3	.....			2,744	3	0	3,439	11	3	.....			3,439	11	3	Schedule not filed as yet.	
Protap Chunder Chatterjee ...	748	11	7	.....			7	1	0	741	10	7	.....			741	10	7	Nothing further recoverable.	
Purmessur Khan and others (Purmessur Khan and Debendra Nath Khan, Purmessur Khan & Co.).	3,129	9	9	1,109	0	8	1,364	2	4	656	6	9	656	6	9	.....			Ditto	ditto.
Payne & Co. (Bombay Firm) (Walter Newton & Co.)	8,025	0	0	6,125	3	10	1,364	13	10	534	14	4	531	12	8	3	1	8	Ditto	ditto.
Palmer & Co., R. G. ...	25,446	13	0	15,056	7	5	11,148	4	1	9,242	1	6	310	1	3	8,932	0	3	Ditto	ditto.
Poolin Chunder Mitter ...	637	11	1	.....			.....			637	11	1	.....			637	11	1	Ditto	ditto.
Panna Lall Addy ...	818	12	6	.....			167	0	11	651	11	7	.....			651	11	7	Ditto	ditto.
Pran Nath Paul ...	3,223	4	6	773	10	5	1,269	3	10	1,180	6	3	1,150	8	7	29	13	8	Ditto	ditto.
Pursuttum Lall ...	3,210	6	0	.....			911	13	6	2,298	8	6	.....			2,298	8	6	Outstanding : in course of recovery.	
Panchaud, G. H. L. ...	519	9	5	.....			.....			519	9	5	.....			519	9	5	Nothing further recoverable.	
Pasumarti Jagapa ...	6,841	15	11	.....			2,050	8	0	4,791	7	11	.....			4,791	7	11	Outstanding ; in course of recovery.	
Quillet, DeGray & Co. ...	6,539	10	4	3,148	1	11	2,380	4	6	1,011	3	11	1,011	3	11	.....			Nothing further recoverable.	

Estates.	Whole amount of receipts.	Whole Disbursements.		Balance.	Portion of balance applicable to dividends now payable.	Net balance.	Probable outturn of the dependencies.
		Dividends paid.	Other payments.				
	Rs. A. P.	Rs. A. P.	Rs. A. P.	Rs. A. P.	Rs. A. P.	Rs. A. P.	
Runtz, Rees & Co. ...	19,490 12 2	3,907 1 1	10,081 14 8	5,551 12 5	5,551 12 5	.....	Nothing further recoverable.
Russell, C. D. ...	8,785 14 2	7,162 15 2	1,059 0 9	563 14 8	20 15 2	542 15 1	Ditto ditto.
Rughoo Nath Bose ...	1,778 13 4	702 12 10	444 4 0	631 12 6	591 11 0	40 1 6	Ditto ditto.
Rogers, Alexander ...	10,892 13 6	5,963 0 4	4,136 10 9	793 2 5	.....	793 2 5	Ditto ditto.
Rajkissore Dutt ...	4,683 12 2	.....	665 13 6	4,017 14 8	.....	4,017 14 8	Ditto ditto.
Rousac, A. G. ...	12,304 10 3	8,940 2 5	1,063 11 3	2,300 12 7	2,300 12 7	.....	Ditto ditto.
Ramdhone Mitter ...	838 5 4	52 4 5	217 8 2	568 8 9	453 1 6	115 7 3	Ditto ditto.
Rustomjee, Cowasjee & Co. ...	11,032 15 0	3,373 5 8	6,015 1 6	1,644 7 10	1,285 10 3	358 13 7	Ditto ditto.
Ramsabuck Misser and others ...	1,23,206 9 4	76,538 6 6	29,912 4 9	16,755 14 1	16,382 14 4	372 15 9	Ditto ditto.
Robinson, S. H. ...	1,129 10 9	.....	132 0 0	997 10 9	.....	997 10 9	Ditto ditto.
Ram Narain Sreemaney ...	9,319 8 0	4,158 0 11	2,041 7 1	3,120 0 0	3,066 10 8	53 5 4	Ditto ditto.
Robinson, J. J. (Wallace & Co.) ...	3,052 8 8	282 0 0	2,027 4 6	743 4 2	309 14 9	433 5 5	Ditto ditto.
Ram Narain Janookey Persad ...	5,296 4 9	.....	2,792 3 0	2,504 1 9	.....	2,504 1 9	Schedule not filed as yet.
Russick Lall Paul ...	702 5 3	.....	23 11 6	678 9 9	.....	678 9 9	Nothing further recoverable.
Ritz, Alfred ...	1,139 0 0	.....	208 7 6	930 8 6	690 13 5	239 11 1	Ditto ditto.
Ram Gopal Paul ...	8,141 12 6	4,391 8 3	2,408 6 8	1,341 13 7	1,143 9 1	198 4 6	Ditto ditto.
Ram Dass Paul ...	1,545 8 3	506 2 6	475 10 9	563 11 0	421 3 0	142 8 0	Ditto ditto.
Rakhal Chunder Banerjee (junior) ...	5,534 7 3	138 2 6	2,866 9 9	2,529 11 0	62 13 6	2,466 13 6	Ditto ditto.
Rushton, H. P., and others (Rushton Brothers). ...	81,120 10 6	47,540 3 8	26,799 11 0	6,780 11 10	5,409 13 3	1,370 14 7	Ditto ditto.
Rustomjee Cowasjee ...	3,796 13 7	1,637 9 1	425 11 10	1,733 8 8	1,537 12 2	195 12 6	Ditto ditto.
Rushton, Edward ...	2,784 3 9	1,418 6 4	708 1 11	657 11 6	657 11 6	.....	Ditto ditto.
Ramsarun Lall ...	57,280 1 1	31,982 11 9	21,011 11 2	4,285 10 2	4,128 9 5	157 0 9	Ditto ditto.
Ramkissen Kotary ...	7,527 14 3	4,686 9 5	1,842 6 5	998 14 5	998 14 5	.....	Ditto ditto.
Ramsamull Pannalall ...	1,933 2 9	614 11 8	720 0 5	598 6 8	388 10 3	209 12 5	Ditto ditto.
Robertson, C. A. (1st) ...	1,500 0 0	477 2 10	81 12 9	941 0 5	726 4 9	214 11 8	Ditto ditto.
Ramdhone Mullick ...	46,978 0 3	455 4 3	45,512 6 2	1,010 5 10	.....	1,010 5 10	Ditto ditto.
Rajendra Coondoo and another ...	860 0 0	.....	262 7 0	597 9 0	.....	597 9 0	Ditto ditto.
Reinhold, H. (Reinhold & Co.) ...	13,795 10 0	10,430 3 10	2,663 9 1	701 13 1	519 7 0	182 6 1	Ditto ditto.
Reinhold, H. C., and another (Reinhold Brothers). ...	5,998 10 10	135 7 9	1,717 6 5	4,145 12 8	233 14 0	3,911 14 8	Ditto ditto.
Reinhold, H. C. (separate account) ...	790 0 0	7 11 2	53 1 8	729 3 2	718 3 3	10 15 11	Ditto ditto.
Ritz, Reinhold and Feilman ...	13,333 5 0	10,502 0 10	1,073 3 9	1,758 0 5	216 13 6	1,541 2 11	Ditto ditto.
Rashbehary Roy and Jallodhur Roy ...	33,065 14 4	4,904 4 5	23,266 11 6	4,894 14 5	1,193 12 6	3,701 1 11	Ditto ditto.
Ramkissen ...	10,32,481 9 6	2,73,173 9 8	7,53,665 5 10	5,642 10 0	4,278 15 7	1,363 10 5	Ditto ditto.
Rambox Rattey (Chooneelall Jankey Persad).	5,329 3 8	3,223 2 6	1,546 6 7	559 10 7	541 11 1	17 15 6	Ditto ditto.

Ram Chunder Tarafdar	...	633	14	9	.....			60	4	0	573	10	9	.....		573	10	9	Ditto	ditto.
Roghu Nath Dass Muddun Gopal	...	72,688	5	2	33,381	12	0	28,409	9	2	10,897	0	0	5,121	0	0	5,776	0	0	Ditto	ditto.
Ramdayal Ghose (1st)	...	753	0	0	.....			45	8	3	707	7	9	647	14	2	59	9	7	Ditto	ditto.
Raj Chunder Pakhira	...	1,363	0	6	324	6	2	233	9	4	805	1	0	544	13	8	260	3	4	Ditto	ditto.
Runghore Dass Dhunjee	...	26,104	7	3	9,689	7	8	10,303	7	3	6,111	8	4	4,617	2	11	1,494	5	5	Ditto	ditto.
Ramrick Dass and Nundoram (Sirdarmull Ramrick).		11,036	10	6	2,906	4	0	1,691	6	3	6,439	0	3	3,393	12	0	3,045	4	3	Ditto	ditto.
Ramprotap Buldeb Dass	...	2,021	6	3	.....			1,187	10	0	833	12	3	.....			833	12	3	Ditto	ditto.
Rekub Dass Bagree and others	...	4,023	14	9	.....			1,451	12	3	2,572	2	6	.....			2,572	2	6	Outstanding: in course of recovery.	
Ramlall Mullick	...	1,396	5	11	30	0	3	654	11	7	711	10	1	679	8	7	32	1	6	Nothing further recoverable.	
Saunders, May and Fordyce	...	4,03,262	11	3	3,21,713	7	1	68,904	4	4	12,642	15	10	11,992	9	4	650	6	6	Ditto	ditto.
Stewart & Co., W. C.	...	8,040	4	10	2,515	5	5	1,414	11	0	4,110	4	5	3,953	12	5	156	8	0	Ditto	ditto.
Senaes, W. DeMonte	...	2,514	11	7	.....			912	2	6	1,602	9	1	1,533	5	10	69	3	3	Ditto	ditto.
Smith, W. S.	...	3,620	13	5	2,635	15	6	471	0	8	513	13	3	471	11	1	42	2	2	Ditto	ditto.
Stoequelor, J. H.	...	7,138	0	0	210	6	5	5,537	0	7	1,390	9	0	1,122	12	7	267	12	5	Ditto	ditto.
Schlatter, Michael	...	20,294	14	10	16,357	13	1	2,433	0	9	1,504	1	0	1,006	8	1	497	8	11	Ditto	ditto.
Smoult, W. H.	...	1,975	10	3	248	4	11	328	9	3	1,399	12	1	1,040	0	0	359	12	1	Ditto	ditto.
Sheppard, G. A.	...	5,598	2	10	4,179	1	11	662	0	7	757	0	4	652	6	0	104	10	4	Ditto	ditto.
Scott, C. C. J.	...	7,723	13	9	4,657	10	11	2,002	0	10	1,062	2	0	631	9	11	430	8	1	Ditto	ditto.
Sarkies & Co., P. J.	...	52,610	10	9	6,473	9	2	45,380	2	2	756	15	5	602	12	10	154	2	7	Ditto	ditto.
Smith, Huffnagle & Co.	...	26,632	14	5	13,828	7	4	10,798	4	10	2,006	2	3	.....			2,006	2	3	Ditto	ditto.
Stubbs, W. V. G.	...	3,491	6	5	81	3	10	1,649	12	7	1,760	6	0	262	2	3	1,498	3	9	Ditto	ditto.
Snook, J. V.	...	775	10	0	.....			158	0	0	617	10	0	.....			617	10	0	Ditto	ditto.
Sreegopal Misser	...	1,951	0	0	55	14	4	678	6	8	1,216	11	0	1,093	0	11	123	10	1	Ditto	ditto.
Solomon Moladina	...	64,041	6	10	43,579	4	11	17,498	10	0	2,963	7	11	2,682	12	0	280	11	11	Ditto	ditto.
Stewart, W. M.	..	24,989	4	9	12,513	15	1	6,325	15	7	6,149	6	1	5,610	9	8	538	12	5	Ditto	ditto.
Sarkies, P. J.	...	10,227	7	7	6,170	7	7	3,097	5	4	959	10	8	787	6	3	172	4	5	Ditto	ditto.
Sreenath Mullick	...	17,782	7	7	13,851	5	6	3,389	12	10	541	5	3	431	12	6	109	8	9	Ditto	ditto.
Sewnundun Panday	...	32,283	9	9	18,836	10	11	7,473	4	4	5,973	10	6	5,242	11	7	730	14	11	Ditto	ditto.
Smith, A. M.	...	2,869	10	7	244	1	6	801	15	7	1,754	9	6	1,371	10	8	382	14	10	Ditto	ditto.
Shib Chunder Seal	...	13,555	3	9	3,239	6	10	9,479	3	3	836	9	8	836	9	8	.....			Ditto	ditto.
Solomon & Co., D. H.	...	16,053	12	9	9,548	4	5	4,711	4	9	1,794	3	7	1,606	0	1	188	3	6	Ditto	ditto.
Schiller, F., and another (Borradaile, Schiller & Co.).		1,52,678	15	7	84,399	13	8	31,168	12	4	37,110	5	7	29,871	6	4	7,238	15	3	Ditto	ditto.
Smith & Co., Thomas	...	66,941	4	3	8,918	11	0	56,288	9	2	1,734	0	1	1,078	12	0	655	4	1	Ditto	ditto.
Schiller, F.	...	5,482	10	7	1,287	9	0	1,489	4	1	2,705	13	6	2,489	5	2	216	8	4	Ditto	ditto.
Shamlall Khettry (Dewkey Nundon Lalljee Mull).		16,952	12	6	12,583	1	6	3,302	15	10	1,066	11	2	1,066	11	2	.....			Ditto	ditto.
Seetaram Rohatjee	...	945	8	3	.....			158	6	6	787	1	9	.....			787	1	9	Ditto	ditto.
Smallwood, A. (Lloyd & Co.)	...	6,736	11	3	1,402	0	9	2,790	9	2	2,544	1	4	.....			2,544	1	4	Ditto	ditto.
Soorjeemull Mugneeram and Hunmuntram (Soorjeemull Mugneeram).		3,728	8	6	1,065	11	7	1,541	0	1	1,121	12	10	1,121	12	10	.....			Ditto	ditto.
Stewart, T.	...	2,202	15	3	.....			1,052	10	9	1,050	4	6	.....			1,150	4	6	Ditto	ditto.
Soutendra Mohun Tagore	...	810	5	9	132	12	7	62	11	4	614	13	10	614	13	10	.....			Ditto	ditto.

Estates.	Whole amount of receipts.	Whole Disbursements.		Balance.	Portion of balance applicable to dividends now payable.	Net balance.	Probable outturn of the dependencies.
		Dividends paid.	Other payments.				
	Rs. A. P.	Rs. A. P.	Rs. A. P.	Rs. A. P.	Rs. A. P.	Rs. A. P.	
Stephen, A. J. (2nd) ...	1,201 8 0	212 14 5	42 1 2	946 8 5	326 1 3	620 7 2	Nothing further recoverable.
Shama Churn Sen ...	98,394 5 11	27,457 7 6	70,422 3 6	514 11 4	.....	514 11 4	Ditto ditto.
Sheodan Mull and another ...	8,847 1 4	6,962 3 4	818 4 5	1,066 9 7	487 14 1	578 11 6	Ditto ditto.
Schallay & Co. ...	1,077 2 1	212 9 7	191 10 4	672 14 2	214 2 8	458 11 6	Ditto ditto.
Soogun Chand Gopikissen ...	12,874 12 3	4,173 6 4	3,174 8 10	5,526 13 1	5,270 6 1	256 7 0	Ditto ditto.
Smith & Co., McGavin ...	678 13 3	.....	4 3 0	674 10 3	.....	674 10 3	Ditto ditto.
Sew Narain and another (Sewpal and Sew Narain).	57,542 0 5	23,259 3 3	31,582 13 2	2,700 0 0	.....	2,700 0 0	Ditto ditto.
Summers, A. (Watson and Summers) ...	12,382 14 2	5,529 15 0	5,901 15 9	950 15 5	358 9 7	592 5 10	Ditto ditto.
Stewart, C. ...	60,695 15 8	41,586 15 4	17,660 4 1	1,448 12 3	312 15 11	1,135 12 4	Nothing further recoverable.
Shookdeo Dass Mothura Dass ...	1,316 11 3	.....	246 6 6	1,070 4 9	... ..	1,070 4 9	Outstanding: in course of recovery.
Soorjeemull Kadia (Sew Narain Soorjeemull).	2,442 15 10	.....	885 13 11	1,557 1 11	.....	1,557 1 11	Nothing further recoverable.
Sree Nath Sett and others ...	2,639 7 6	.....	849 6 10	1,790 0 8	.....	1,790 0 8	Outstanding: in course of recovery.
Sreedam Chunder Seal ...	4,586 0 10	2,395 15 8	1,066 8 8	1,123 8 6	2 1 2	1,121 7 4	Nothing further recoverable.
Straw, F. T. ...	1,22,111 4 8	60,033 2 9	61,483 11 0	594 6 11	564 4 7	30 2 4	Ditto ditto.
Sarat Coomar Sen ...	4,620 6 0	.....	225 0 0	4,395 6 0	.....	4,395 6 0	Ditto ditto.
Soojonmull Hununtram ...	1,592 8 0	.....	172 0 0	1,420 8 0	.....	1,420 8 0	Ditto ditto.
Sarat Chunder Sen ...	2,278 5 6	816 0 0	342 7 5	1,119 14 1	40 0 0	1,079 14 1	Ditto ditto.
Shaik Abdoolla ...	572 7 0	.....	.....	.....	572 7 0	572 7 0	Ditto ditto.
Tullah & Co. (1st) ...	1,21,128 2 10	68,615 10 0	50,626 7 9	1,886 1 1	1,139 10 6	746 6 7	Ditto ditto.
Tullah & Co. (2nd) ...	19,223 10 2	8,961 4 4	9,684 15 7	577 6 3	411 1 3	166 5 0	Ditto ditto.
Thomas & Co. ...	4,55,276 15 3	3,98,103 6 2	50,239 15 2	6,933 9 11	1,314 1 0	5,619 8 11	Ditto ditto.
Trower, Charles ...	2,177 9 0	240 0 0	72 0 0	1,865 9 0	811 7 5	1,054 1 7	Ditto ditto.
Twentyman & Co. ...	683 6 7	.....	152 2 1	531 4 6	.....	531 4 6	Ditto ditto.
Thomas, John ...	740 0 0	.....	.. ...	740 0 0	.....	740 0 0	Ditto ditto.
Tarachand Koramull Dowlut Chand ...	22,970 1 11	6,210 6 9	14,187 12 0	2,571 15 2	2,199 13 3	372 1 11	Ditto ditto.
Teitkins, A. H. ...	5,671 12 10	3,819 12 0	1,248 0 5	604 0 5	.....	604 0 5	Ditto ditto.
Tarton, Sir T. E. M. ...	2,49,996 3 10	1,48,440 1 3	1,00,447 2 8	1,108 15 11	661 10 1	447 5 10	Ditto ditto.
Troylakha Nath Roy and another ...	26,576 11 0	18,630 12 6	7,142 7 5	803 7 1	712 2 11	91 4 2	Ditto ditto.
Thorndike, A., and another (Atkinson, Tilton & Co.).	48,581 15 8	19,772 1 0	25,210 0 8	3,599 14 0	2,681 9 4	918 4 8	Ditto ditto.
Tunsook Roy and Premsook Roy ...	27,590 9 11	9,941 11 1	10,889 8 2	6,759 6 8	5,735 3 2	1,024 3 6	Ditto ditto.
Turnbull, R. A. ...	18,183 9 3	2,771 3 3	14,076 13 11	1,335 8 1	107 3 8	1,228 4 5	Ditto ditto.
Templeton, A. N. (2nd) ...	1,600 0 0	58 10 0	77 9 9	1,463 12 3	1,231 1 8	232 10 7	Ditto ditto.

Tincowry Dass	...	6,741	8	4	3,118	13	10	1,039	11	7	2,581	14	11	715	4	2	1,866	10	9	Ditto	ditto.
Teruthram	...	1,445	3	9	497	0	6	226	0	7	722	2	8	230	0	5	492	2	3	Ditto	ditto
Taraprasanna Sircar	...	1,62,684	14	0	63,824	2	7	83,375	6	10	15,485	4	7	12,562	9	9	2,922	10	10	Ditto	ditto.
Vandenberg, J. B. (2nd)	...	5,740	4	3	4,036	0	7	440	2	5	1,264	1	3	1,235	11	11	28	5	4	Ditto	ditto.
Voight & Co., S. E.	...	1,637	11	3	199	0	0	13	8	8	1,425	2	7	.....			1,425	2	7	Ditto	ditto.
Willis, Joseph	...	1,20,346	2	7	88,227	7	6	29,952	12	8	2,165	14	5	1,839	2	11	326	11	6	Ditto	ditto.
Willis, F. F.	...	7,102	7	11	892	13	4	2,906	1	7	3,303	9	0	2,932	2	8	371	6	4	Ditto	ditto.
Wood, Olliffe & Co.	...	3,276	6	10	.....			1,427	4	6	1,849	2	4	.....			1,849	2	4	Ditto	ditto.
Waring, E. S. S.	...	3,066	8	8	1,784	1	7	529	5	2	753	1	11	647	4	3	105	13	8	Ditto	ditto.
Williams, Stephen	...	20,504	1	5	17,453	13	10	2,207	14	7	842	5	0	474	9	9	367	11	3	Ditto	ditto.
Watson & Co. (Gibbon & Co.)	...	1,06,519	3	0	87,390	15	9	15,992	0	3	3,136	3	0	2,703	9	8	432	9	4	Ditto	ditto.
Wood, H. W. J.	...	2,539	13	0	712	3	7	885	5	3	942	4	2	785	11	9	156	8	5	Ditto	ditto.
Webb, John	...	4,457	8	3	2,391	0	8	1,103	4	5	963	3	2	890	14	9	72	4	5	Ditto	ditto.
Wood, David	...	1,414	3	0	56	7	3	809	0	3	548	11	6	548	11	6	.. ...			Ditto	ditto.
Wallis, C. B.	...	8,520	11	5	6,592	2	1	1,403	4	3	525	5	1	120	11	5	404	9	8	Ditto	ditto.
Woodin, W. G. F. (Hodgkinson & Co.)		25,413	4	5	1,022	8	2	22,444	3	9	1,946	8	6	1,549	5	6	397	3	0	Ditto	ditto.
Woomes Chunder Bannerjee (G. F. De-Lemans & Co.).		23,991	14	1	19,723	8	11	3,084	8	11	1,183	12	3	1,183	12	3	.....			Ditto	ditto.
Wilder, J. J.	...	1,200	0	0	126	6	4	21	7	1	1,052	2	7	.....			1,052	2	7	Ditto	ditto.
Wiseham, William	...	967	3	6	.....			32	0	0	935	3	6	.....			935	3	6	Schedule not filed as yet.	
Winterscale, James	...	1,254	12	10	175	0	0	378	7	0	701	5	10	.....			701	5	10	Nothing further recoverable.	
Woopendra Nath Dey and another	...	6,164	5	9	1,744	0	6	1,302	15	9	3,117	5	6	1,548	13	11	1,568	7	7	Ditto	ditto.
Woopendra Chander Singha	...	5,967	6	9	.....			97	1	0	5,870	5	9	.....			5,870	5	9	Outstanding : in course of recovery.	
Zunini, A.	...	4,860	2	9	1,002	1	3	2,984	10	3	873	7	3	534	6	9	339	0	6	Nothing further recoverable.	

In addition to the above, there are 2,217 estates with balances under Rs. 500 each, aggregating Rs. 2,22,200-2-5, the particulars of which may be learnt at this office. The Official Assignee has received for remuneration for the quarter ending 30th June 1901 Rs. 12,085-10-9.

CALCUTTA,
The July 1902.

(442—1)

A. B. MILLER,
Official Assignee.

দেওয়ানী
নম্বর ২৫৪। ১৯০২।

কলিকাতা।

দেওয়ানী কার্য্যবিধি আইনের ৩০ ধারা অনুসারে নোটীস।

১। বাবু গিরীজা প্রসন্ন মুখোপাধ্যায়, ২। বাবু জ্যামদা প্রসন্ন মুখোপাধ্যায়, সাং গোবরডাঙ্গা, ষ্টেশন হাবড়া, জেলা চব্বিশ-পরগণা ..... বাদীগণ।

বনাম

১। বুধই পাড়ই, ২। যজ্ঞেশ্বর পাড়ই, ৩। প্রসন্ন পাড়ই, ৪। নবকুমার পাড়ই, ৫। রাখাল পাড়ই, ৬। অক্রুর পাড়ই, ৭। অর্জ্জুন পাড়ই, ৮। তারণ পাড়ই, ৯। সয়ারাম পাড়ই, ১০। ভুবন পাড়ই, ১১। মহেশ পাড়ই, ১২। হাজারি পাড়ই, নাবালক, ১৩। মহেন্দ্র পাড়ই, নাবালক, অলি রক্ষক মাতা পটো জেলেনি, ১৪। মহাদেব পাড়ই, ১৫। বেণী পাড়ই, সাং ভুমা, ষ্টেশন গাইঘাটা, জেলা যশোহর, ও ভুমা নিবাসী অন্যান্য জালিয়াগণ ..... বিবাদীগণ।

১৬। জহিমদ্দী বিশ্বাস, সাং সবাইপুর, থানা বনগ্রাম, জেলা যশোহর ..... মোকাবেলা বিবাদী।

জেলা যশোহরের থানা গাইঘাটার মোতালক ভুমা গ্রাম নিবাসী

ক্র শ্রীবুধই পাড়ই, ২। যজ্ঞেশ্বর পাড়ই, ৩। প্রসন্ন পাড়ই, ৪। নবকুমার পাড়ই, ৫। রাখাল পাড়ই, ৬। অক্রুর পাড়ই, ৭। অর্জ্জুন পাড়ই, ৮। তারণ পাড়ই, ৯। সয়ারাম পাড়ই, ১০। ভুবন পাড়ই, ১১। মহেশ পাড়ই, ১২। হাজারি পাড়ই, নাবালক, ১৩। মহেন্দ্র পাড়ই, নাবালক, অলি রক্ষক মাতা পটো জেলেনি, ১৪। মহাদেব পাড়ই, ১৫। বেণী পাড়ই, সাং ভুমা, ষ্টেশন গাইঘাটা, জেলা যশোহর, ও ভুমাগ্রাম নিবাসী অন্যান্য জালিয়াগণ।

এতদ্দ্বারা সাধারণ নোটীস (Public advertisement) দেওয়া যাইতেছে যে উপরোক্ত বাদীগণ অত্রাদালতে উপরোক্ত নম্বরে উপরোক্ত ভুমাগ্রাম নিবাসী সমস্ত জালিয়াগণের নামে ভুমা বাঁওড়ে বাদীগণের স্বত্ব প্রচারপূর্ব্বক প্রতিবাদীগণের প্রতি জলকরের মৎস্য ধরিবার বা তৎসংক্রান্ত কোন কার্য্য করিবার স্থায়ী নিষেধ আজ্ঞা (Perpetual injunction) করিবার বাবত নালিশ করিয়াছেন, ভুমা নিবাসী সমস্ত জালিয়াগণের বিরুদ্ধে বাদীগণের একই নালিশের কারণ এবং ঐ সমস্ত জালিয়াগণের ঐ মোকদ্দমায় একই স্বার্থ উক্ত জালিয়াগণের সংখ্যা অত্যন্ত অধিক সকলকে বিবাদী শ্রেণীভুক্ত করিয়া মোকদ্দমা চালান অসম্ভব একারণ ১ হইতে ১৫ নং বিবাদীগণ (যাহাদিগের সহিত ঐ বাওড় সম্বন্ধে ফৌজদারী আদালতে অনেক মোকদ্দমা হইয়াছে) তাহাদিগকে সমস্বার্থবিশিষ্ট উপরোক্ত সমস্ত জালিয়াগণের পক্ষে প্রতিবাদী শ্রেণীভুক্ত করিয়া ও অন্যান্য জালিয়াগণকে সাধারণ ভাবে প্রতিবাদী করিয়া উপরোক্ত মোকদ্দমা উপস্থিত করা হইয়াছে। এই নোটীসদ্বারা ভুমা গ্রামের জালিয়াগণকে উপরোক্ত বিষয় জ্ঞাত করা হইল। ইতি ১৯০২ সাল ২৪শে জুলাই।

By order,

TARAN CHUNDER GHOSH,
Sharistadar, 1st Subordinate Judge's Court, Jessore.

(452—1)

Estate George Lawtu St. Leger Fagan.

NOTICE is hereby given that all creditors and other persons having any claims against the estate of George Lawtu St. Ledger Fagan, late of Calcutta, Barrister-at-Law, who died at Darjeeling in August 1885, are hereby required to send in writing the particulars thereof to the undersigned as Solicitors for Oliver Horace Dickinson, of 30-2 Dalhousie Square, Calcutta, to whom Letters of Administration of the property and credits of the said deceased have been granted by the High Court of Judicature at Fort William in Bengal, on or before the 1st day of September 1902, after which date no claims will be admitted, and the assets of the estate of the said deceased will be distributed.

Dated this 21st day of July 1902.

SANDERSON & Co., 30-2 Dalhousie Square, Calcutta.
(439—1—992)

Estate Eliza Caroline Fagan.

NOTICE is hereby given that all creditors and other persons having any claims against the estate of Eliza Caroline Fagan, late of Calcutta, who died at 57 St. John's Road, Upper Holloway, in the County of Middlesex, on the 27th day of February 1900, are hereby required to send in writing the particulars thereof to the undersigned as Solicitors for Oliver Horace Dickinson, of 30-2 Dalhousie Square, Calcutta, to whom Letters of Administration of the property and credits of the said deceased, with copy of will annexed, have been granted by the High Court of Judicature at Fort William in Bengal, on or before the 1st day of September 1902, after which date no claims will be admitted, and the assets of the estate of the said deceased will be distributed.

Dated this 21st day of July 1902.

SANDERSON & Co., 30-2 Dalhousie Square, Calcutta
(440—1—992)

Howrah Mills Company, Limited.

PROCEEDINGS of the Twenty-fourth Half-yearly Ordinary General Meeting of Shareholders held at the Registered Office of the Company, No. 9 Clive Row, Calcutta, on Friday, the 25th July 1902, at 12-45 P.M.

PRESENT:

Shirley Tremearne, Esq., in the Chair.

D. King, Esq, Frod. Siddons, Esq., A. C. Lawrie, Esq, Hans. R. Schuler, Esq., D. R. Wallace, Esq., A. Sieger, Esq, by his Attorney, J. Keyser, Esq., Messrs A. Phillips, E. Weatherdon, Premsook, Sew Dutt Roy, W. Garth, D. Yule and Mrs. C. L. Weatherall, by their Attorney, D. King, Esq., Messrs. John Owen, George Gough, Lieut.-Col. J. L. A. Mackay and Mrs. A. I. Siddons, by their Attorney, Fred. Siddons, Esq.

The advertisement convening the Meeting having been read and the Directors' Report being taken as read, the following resolutions were passed unanimously:—

Proposed by Shirley Tremeame, Esq.,
Seconded by Fred. Siddons, Esq —

That the Directors' Report dated 8th July 1902 be adopted, and that the accounts to 30th June 1902, as printed and circulated to Shareholders, be passed.

Proposed by A. C. Lawrie, Esq.,
Seconded by D. King, Esq.—

That in accordance with the recommendation of the Directors a dividend of eight rupees per share, free of income-tax, be declared payable forthwith on the ordinary shares of the Company.

The Meeting closed with a vote of thanks to the Chair.

SHIRLEY TREMEARNE, Chairman.
(446—1—986)

Pure Sulphate of Quinine.

MANUFACTURED AT THE BENGAL GOVERNMENT CINCHONA PLANTATION.

FROM 1st April 1902 the price of this quinine will be as follows:—

1	Pound tin	Rs. 17,	or, post free,	Rs. 17-8			
½	„	„	„	8-8	„	„	„ 8-14.
¼	„	„	„	4-4	„	„	„ 4-10.

Analysis shows this quinine to be of the purest manufacture; and it is guaranteed to be free from wilful mixture with the inferior alkaloids, cinchonine and cinchonidine. It is for sale only to Government officers, and only for cash, and may be had from the Superintendent, Botanic Garden, Sibpur, near Calcutta.

Cinchona Febrifuge.

Cinchona Febrifuge can be purchased by all Government officers and by any one taking *six pounds* and upwards at a time from the Superintendent, Botanic Garden, Calcutta, for cash only at the following rates—

	Government officers.	General public.	Postage extra.
	Rs. A.	Rs.	As.
1 Pound tin ...	10 0	12	8
½ „ „ ...	5 0	6	6
¼ „ „ ...	2 8	3	4

RAJENDRA CHANDRA CHUCKERBUTTY, B.L. intends to be enrolled as a Vakil, High Court.

(368—4—919)

LALIT MOHAN GHOSE, M.A., B.L., intends to be enrolled as a Vakil of the High Court, Calcutta.

(367—4—918)

HARI CHARAN BOSE, M.A., B.L., intends to be enrolled as a Vakil of the High Court, Calcutta.

(376—4—969)

BABU NARENDRA LAL DEY, M.A., B.L., intends to enrol as a Vakil of the High Court, Calcutta.

(431—4—980)

Wanted.

AN Estimator is required for the office of the Executive Engineer, Mahanadi Division, Cuttack. He must be a good Draftsman and Tracer. He must also have a certain amount of knowledge of how to work out calculations for the scantlings of roof timbers, size of joists and Ts for terraced roofs, &c., and be able to make finished drawings from pencil sketches and the instruction given. When not employed in drawing or estimating he will be required to perform the duties of an ordinary clerk in an Executive Engineer's office. The man appointed will be on probation for six months. A candidate who has gone through the Sibpur Course preferred. The post is a permanent one. The salary Rs. 60 a month rising by yearly increments of Rs 4, on approved service, to Rs. 80. Applications, with certified copies of testimonials, or the originals, should be addressed to the Executive Engineer, Mahanadi Division, Cuttack.

Wanted

A SUB-INSPECTOR OF SCHOOLS on a salary of Rs. 50 and travelling allowance up to Rs. 35 a month under the Civil Service Regulations. The post is likely to be permanent. Knowledge of Hindi is indispensable. None but graduates and successful teachers qualified under the rules need apply. Applications with copies of certificates of age, health, moral character, &c., must reach the undersigned by the 9th August 1902.

SARAT CH. SEN GUPTA,

for Chairman, District Board, Palamau.

Palamau District Board's Office, dated Daltonganj, the 22nd July 1902. (443—2)

Notice.

WANTED from about 1st December 1902 for the Hooghly Collectorate a Sharistadar on a monthly salary of Rs. 120 rising to Rs. 200 by a biennial increment of Rs 8.

None without previous experience need apply. Applications stating nature of experience and accompanied by copies of testimonials should reach the Collector not later than the 30th September.

R. C. HAMILTON, Collector.

Hooghly Collectorate, the 10th July 1902.

Notice.

WANTED a District Engineer for the Hazaribagh District Board on a monthly salary of Rs. 200—20—300 and a travelling allowance at the rate of 8 annas per mile when travelling more than 20 miles a day and Rs. 3 halting allowance per diem. No one need apply who is not qualified under Bengal Government Notification No. 3334L S.-G., dated 20th December 1900, published in the *Calcutta Gazette* of the 26th December 1901. Applications should be submitted in sealed and registered covers to the address of Chairman, District Board, and superscribed "Applications for the post of District Engineer," and must be accompanied by all the necessary certificates and testimonials.

Applications will be received up to 31st August 1902.

S. KARAM HOSSAIN, Vice-Chairman.

Hazaribagh, the 14th July 1902. (408—2)

Notice.

WANTED a District Engineer for the District Board of Bogra on a salary of Rs. 200 a month rising to Rs. 300 by an annual increment of Rs. 20.

2. None need apply who is not qualified under the rules issued in Government Notification No. 3334L.S.-G., dated 20th December 1901.

3. All applications from intending candidates shall be submitted in sealed and registered covers addressed to the Chairman of the Bogra District Board and superscribed "Application for appointment of District Engineer." Each application must be accompanied by all the necessary certificates and testimonials required by the rules issued in the said Resolution, together with a suitable envelope addressed and sufficiently stamped for registration, in which they can be returned in the event of the application being unsuccessful.

4. Applications will be received by the undersigned up to the 10th August 1902.

R. KRISHNA, Chairman.

Bogra, the 19th July 1902. (419—3)

Notice.

IN continuation of this Office Notice dated 27th June 1902, published in the *Calcutta Gazette* of the 9th July 1902, Part II, page 871, it is hereby notified for general information, under section 38 of Act IV (B.C.) of 1887, that a charge of Rs. 70 a day will be levied as extra jetty hire on all Charter-party holidays in addition to the usual jetty hire, viz. Rs. 35, charged on ordinary days.

R. S. GREENSHIELDS,

Chairman of the Port Commissioners.

Chittagong, the 22nd July 1902. (444—3)

Notice.

WANTED a Supervisor of Collections on a salary of Rs. 40 and a horse allowance of Rs. 10 a month, *plus* an annual bonus of Rs. 120, provided the aggregate collections in the several estates amount to at least 95 per cent. of the current demand. Knowledge of Hindi is indispensable, and the selected candidate will have to furnish security in Government Promissory Note to the value of Rs. 1,000. Applications will be received up to the 10th proximo.

TRIPURA CHARAN ROY, General Manager,

Ward's and Encumbered Estates, Ranchi.

Camp Silli, the 19th July 1902. (433—1)

Notice.

SEALED TENDERS for the conveyance of import, export and other Government stores, and for labour and the hire of boats for two periods—one of 1 year 3 months, from 1st January 1903 to 31st March 1904, and one for 3 years 3 months, from 1st January 1903 to 31st March 1906—will be received by the Agent for Government Consignments, Calcutta, up to noon on Friday, the 3rd October 1902.

Tenders should be superscribed "Tender for carrying contract for one year and three months" and "three years and three months," as the case may be.

Tenders must be prepared on forms to be obtained with full particulars from the undersigned.

No tender will be received except on the prescribed form, and no additions or alterations must be made on the tender form.

Tenders must be supported by a Bank of Bengal or Treasury receipt for Rs. 700 as earnest-money. The earnest-money to be forfeited in the event of a tender withdrawn No tender will be received without a deposit of this earnest-money.

Tenders will be opened at noon on Friday, October 3rd, 1902, at No. 5 Strand Road, in the presence of tenderers by the undersigned, who does not bind himself to accept the lowest or any tender.

H. J. PATERSON, LIEUT., R.N R.,
Offg Agent for Govt. Consignments.

Calcutta, the 25th July 1902.

Public Auction Sale.

THE following goods now lying at the Custom House will be sold by public auction after one month from date under the provisions of section 88 of the Sea Customs Act it they are not cleared within that period:—

1 Package cycle, parts marked PM3148, *ex* S.S. *Jelunga*, entered inwards on 22nd February 1901.

3 Cases merchandise, marked L. Fildstein, *ex* S.S. *Arratoon Apcar*, entered inwards on 2nd October 1901.

1 Package merchandise, marked Rockit & Co, *ex* S.S. *Pandua*, entered inwards on 31st December 1901.

L. F. MORSHEAD, Offg. Collector of Customs.

Custom House, Calcutta, the 26th July 1902.

NOTICE is hereby given that Babu Manick Lall Seal, of No. 2 Bhowani Churn Dutt's Lane, Calcutta, son of the late Babu Panna Lall Seal, has cancelled the Power-of-Attorney granted by him to Babu Girish Chunder Bose, of Suvararha, son of Ramnarain Bose, deceased, and dated the 16th June 1900, and that the said Girish Chunder Bose is no longer authorised to represent the said Babu Manick Lall Seal in any mattr whatsoever.

Dated the 18th July 1902.

MORGAN & Co.,
Attorneys for Babu Manick Lall Seal.
(411—1)

NOTICE.

In the Court of the Munsif at Balasore

EXECUTION CASE No. 633 OF 1902.

Urdhab Charan Puthal, decree-holder, *versus* Kailash Chandro Mahanty, judgment-holder.

TO be sold by the Nazir of the Munsif's Court at Balasore in the Court premises at 12 o'clock on the 15th August 1902 for the realisation of Rs. 536-0-3—

Six pies share belonging to the judgment-debtor in estate Bishnupore, pargana Siari, bearing tauzi No. 682 of the Balasore Collectorate, station Baliapal.

Government revenue payable for the entire tauzi is Rs. 1,465, and that payable for the above share is Rs. 45 12-6.

ASUTOSH SARKAR, Munsif.

Balasore, the 25th July 1902. (455—1—993)

Currency Notes.

THE following Currency Notes of the Calcutta Circle are stated to have been destroyed, and payment of their value has been claimed by the person whose name is placed against the numbers. Any other person claiming a right to them is warned to communicate at once with the undersigned:—

Notes wholly lost.

Register No.	No. of Notes.	Value.	Name of claimant.
W334 of 1881	O/97 60746	Rs. 100	Nocoor Krishna Mukerjee, Janai, Serampore.
	„ 42420	100	
	„ 58097	100	
	„ 58116	100	
	„ 54809	100	
	„ 56115	100	
	„ 35039	100	
	„ 29724	100	
	„ 29725	100	
	„ 41833	100	

FRED. BREWIN, Assistant Comptroller-General, in charge Paper Currency.

Paper Currency Office, the 12th July 1902.

Notification.

IT is notified that the Mandal Estate, Balasore, will not be responsible for debts contracted by Babus Birendra Coomar Mandal and Hemendra Coomar Mandal, of Chinsurah and Balasore, without the sanction of the District Judge of Cuttack, from 20th October 1901, the date on which the Common Manager took over charge.

By order,
J. N. DUTT, Common Manager.

Balasore, the 6th July 1902. (370—3)

Notification of Sale.

ESTATE NISTARINI DASSEE.

Peary Lall Maitra *versus* Gopal Chunder Chatterjee.

TO be sold by the Official Receiver of the High Court as Receiver of the estate of Nistarini Dassee, deceased, at the hour of 1 o'clock at noon, on Saturday, the 9th day of August next, at his office on the third floor of the High Court building, pursuant to an order of the said High Court made in this suit and dated the 27th day of August, the undermentioned landed properties:—

Re *premises No. 28 Durga Charun Mitter's Street.*

All that three-storied brick-built messuage, tenement or dwelling-house, land, hereditaments, and premises, together with the piece and parcel of land whereon the same is erected and built, containing by estimation 14 chitaks, more or less, situate, lying, being at and numbered 28 Durga Charun Mitter's Street, in the town of Calcutta, and butted and bounded on the north by Durga Charun Mitter's Street, on the east by a common pathway, on the south by 28-1 Durga Charun Mitter's Street (property of Beni Madhub Baisack), and on the west by 27 Durga Charun Mitter's Street (the house of Nemai Chund Dutt and Brothers) howsoever, otherwise the same is or at any time heretofore was butted, bounded known or described.

Re *permises No. 25 Brindabun Bysack's Street.*

All that two-storied brick-built messuage, tenement dwelling-house, hereditaments and premises, together with the land whereon the same is erected and built, containing by estimation 1 cottah 1 chitak and 2 kanchas, more or less, situate, lying and being at and numbered 25 Brindabun Bysack's Street, Sootanoty, in the northern division of the town of Calcutta, and butted and bounded on the north by the privy and compound wall, municipal drain, filled-up lane, on the south by Brindabun Bysack's Street, on the east by the premises No. 24 Brindabun Bysack's Street, dwelling-house of Gopal Chunder Dass, and on the west by No. 26, Brindabun Bysack's Street, the dwelling-house of Panchanun Bhur or howsoever, otherwise the said house, land, hereditaments, and premises or any part thereof now are or is or heretofore were or was situated, bounded, called, known, numbered, described or distinguished.

Re *premises No. 9 Ahiretolla Street.*

All that three-storied brick-built messuage, tenement, dwelling-house, hereditaments, and premises, together with the rent-free land whereon the same is erected and built, containing by estimation .1 cottah, more or less, situate, lying, and being at and numbered 9 Ahiretollah Street, Sootanooty, in the northern division of the town of Calcutta, and butted and bounded on the north by Ahiretolla Street, on the south by No. 7 bustee in Durmahatta Street, a municipal drain and the raiyati land of Babu Dutt, on the east formerly by the land of Juggo Mohun Mookerjee and now by a filled-up drain, and on the west formerly by No. 8 Durmahatta Street, the land of Gocool Chandra Dutt, and now by the tenanted house belonging to Chandra Mullick or howsoever, otherwise the said house, land, hereditaments and premises or any part thereof now are or is or heretofore were or was situated, bounded, called, known, numbered, described or distinguished.

Re *premises Nos. 4 and 4-1 Dhania Bagan Road.*

All that two-storied brick-built messuage, tenement or dwelling house, land, hereditaments and premises, together with the land appertaining thereto and containing by estimation 1 cottah 11 chitaks, more or less, which is bounded on the north by No. 6 Dhania Bagan or Nikaseepara Lane, the dwelling house and land of Raj Chandra Dass Boiragee, on the east by Nikaseepara, Lane, a municipal lane, on the west by the dwelling-house of Moti Bibee Nikaree, and on the south partly by Nikaseepara Lane, a public lane, and partly by the passage leading to the said house and that of Moti Bibee Nikaree, and which said premises form part of the piece or parcel of land contained in tauzi No. 298, division No. 2, subdivision No. 12, in mauza Gourcebara, in Nikaseepara, at Shambazar, in thana Ultadighee, sub-registration district of Sealdah, and holding No. 97—44, and premises Nos. 4 and 4-1 Dhania Bagan Road, in the district of the 24-Parganas.

The conditions of sale can be seen at the office of the said Receiver and also at the office of Babu Navadwip Chandra Roy any time before the sale and will be produced at the sale.

C. E. GREY, Offg. Official Receiver, High Court.

High Court, Receiver's Office, the 8th July 1902.

(369—4)

Notification.

TO be peremptorily sold by the Registrar of Calcutta High Court in its Ordinary Original Civil Jurisdiction in his sale-room in the Court-house on Saturday, the 23rd day of August 1902, at the hour of 12 o'clock noon, pursuant to a decree and an order of the said Court made in suit No. 412 of 1895 (Mohesh Chunder Dey *versus* Abdul Hakim and others), and dated, respectively, the 2nd September 1896 and the 28th August 1901, the following property, viz.—

Lot I.—Nos. 142-143 in Musjeed Baree Street in Sutanati, Northern Division of the Town of Calcutta, being a one-storied brick-built dwelling-house with 7 cottahs and 8 chitaks of land attached thereto, bounded on the north partly by a passage formed by a filled up municipal drain and partly by No. 144 Musjeed Baree Street, on the south by Musjeed Baree Street, on the east by No. 141 Musjeed Baree Street, and on the west partly by No. 144 Musjeed Baree Street and partly by the said passage formed by filled up municipal drain.

Lot II.—Nos 145 and 146 Musjeed Baree Street in Sutanati, Northern Division of the Town of Calcutta, being a rent-free bustee land containing an area of 6 cottahs, and bounded in manner following: on the north by a passage formed by filling up a municipal drain, on the south by Musjeed Baree Street, on the east by No 144 Musjeed Baree Street, and on the west by No. 147 Musjeed Baree Street.

The abstract of title and conditions of sale may be seen at the office of the said Registrar, or at the office of Messrs. Bonnerjee and Bonnerjee at No. 6 Old Post Office Street, Calcutta, on any day before the sale and will be produced at the sale.

W. R. FINK, Registrar.

Bonnerjee and Bonnerjee, Plaintiff's Attorneys.

High Court, Original Side, the 16th day of July 1902.

(434—1—991)

Notification.

TO be peremptorily sold by the Registrar of the High Court of Judicature at Fort William in Bengal, Original Side, in his sale-room in the Court-house on Saturday, the 23rd day of August 1902, at 12 o'clock noon, pursuant to a decree and an order of the said Court made in suit No. 173 of 1901 (Sookendra Lal Mitter *versus* Sreemutty Bhabasundery Dassee), and dated, respectively, the 2nd May 1901 and the 16th April 1 02, the undermentioned properties in one or two lots as the said Registrar shall think fit:—

Lot I—All that undivided one fourth part or share (the whole into four equal parts or shares being considered as divided) of and in the two-storied brick-built dwelling-house with land thereunto belonging and on part whereof the same is built, containing by estimation six and-a half cottahs, more or less, being premises No. 65-6 Mooktaram Babu's Street, Holding No. 175, Block No. XV, in the North Division of the town of Calcutta, and bounded on the north by Kally Charan Dutt's dwelling-house, on the south by the dwelling-house of Bhairab Chunder Dutt, on the east by a private passage in the use of the Dutt family, and on the west by a filled up drain now converted into a lane called Bysack Dighi Lane and paying an annual revenue of Re. 1-3-4 to the Collector of Calcutta.

Lot II.—All that undivided one-sixth part or share (the whole into six equal parts or shares being considered as divided) of and in the lower-roomed brick-built house and premises with land thereunto belonging, whereon or on part whereof the same is built, containing by estimation two cottahs, more or less, and being premises No. 68 Mooktaram Babu's Street, Holding No. 161, Block No. XV, in the North Division of the town of Calcutta and bounded on the north and east by Muktaram Babu's Street, on the south by the tenanted land belonging to Rakhal Chunder Dutt, and on the west by the tenanted house belonging to Haranath Basu and paying an annual revenue of annas 5 and pies 3 to the Collector of Calcutta.

The abstract of title and conditions of sale may be seen at the office of the said Registrar, or at the office of Babu Gnanendra Narayan Dutt, at No. 4 Strand Road, on any day before the sale and will be produced at the sale.

W. R. FINK, Registrar.

Gnanendra Narayan Dutt, Plaintiff's Attorney.

Calcutta High Court, Ordinary Original Civil Jurisdiction, the 21st day of July 1902. (435—1—957)

Notification.

TO be peremptorily sold, pursuant to a decree and orders of the Calcutta High Court, made in suit No. 332 of 1884 (wherein Seetanath Mitter is the surviving plaintiff and A. B. Miller is the defendant), and dated, respectively, the 11th of September 1884, the 23rd of November 1885, and the 3rd of September 1896, by the Registrar of the said Court in his sale-room in the Court-house on Saturday, the 9th day of August 1902, at the hour of 12 o'clock noon, the undermentioned immoveable property:—

All that three-storied brick-built messuage, tenement or dwelling-house, together with the piece or parcel of land or ground thereunto belonging, and on part whereof the same is erected and built, containing by admeasurement 10 cottahs 1 chitak and 36 square feet, more or less, situate at and being No. 6 (formerly No. 13) Mullick Street, in the town of Calcutta, and bounded on the south by the premises Nos. 3, 4 and 5 Mullick Street, formerly belonging to Ram Kissen Dass as described in the mortgage, but now used as a dispensary and dharamsala of Rai Bahadur Suruj Mull Jhoonjhoonwala, on the west by Mullick Street, and on the north and east by premises No. 7 Mullick Street, formerly belonging to Ram Sebuck Mullick, but now belonging to Sham Lall Khettry.

The abstract of title and conditions of sale may be seen at the Office of the Registrar, Original Side, or at the office of Babu Kamini Kumar Guha, plaintiff's Attorney, at No. 11 Old Post Office Street, Calcutta, on any day before the sale and will be produced at the sale.

W. R. FINK, Registrar.

K. K. Guha, Plaintiff's Attorney.

High Court, Original Side, the 23rd day of June 1902. (479—1—994)

Notification.

TO be peremptorily sold, pursuant to a decree and orders of the Calcutta High Court, made in suit No. 196 of 1895 (Sreemutty Foolcoomari Dassee *versus* Monmotho Nath Chatterjee and others), and dated, respectively, 10th June 1895 and 17th February 1896 and 25th April 1902, by the Registrar of the said Court Original Side, in his sale-room in the Court-house on Saturday, the 23rd day of August next, at 12 o'clock noon, the undermentioned properties :—

Lot No. I.—All that portion, of the house and premises No. 77 Clive Street, in the Town of Calcutta, which was allotted to the defendant under a decree of the Court of the Second Sub-Judge of Hooghly in Suit No. 29 of 1886 and is marked F in the plan annexed to the said decree, such portion, the area of which is 1 cottah 13 chitaks and 2 square feet, more or less, is included in Holding No. 272, Block No. VII, North Division, and are now numbered 20 and 21 Raja Woodmunt's Street and No. 77-1-2 Clive Street, the last number being on the back of Nos. 20 and 21 Raja Woodmunt's Street, and bounded on the north by Raja Woodmunt's Street, on the east by the portion of the said premises No. 77 belonging to Chunder Coomar Chatterjee, now numbered 22 Raja Woodmunt's Street, on the west by portion of the said premises belonging to Babu Ashutosh Dhur and Bholanath Dhur, being No. 19 Raja Woodmunt's Street, and on the south by a common passage.

The premises No. 77 Clive Street are held under a mokrari mourasi lease granted by Ranee Anondo Moyee, of Murshidabad, the mother of the present proprietor, Raja Ranjit Singh, of Nusibpur, in Murshidabad. The annual rent payable to the landlord for the entire premises is Rs. 1,156, of which the defendants have to pay 1-24th, or Rs. 48-2-6. There is due to the landlord Rs. 350 for arrears of rent from the beginning of 1302 to the end of 1308 B S.

Lot No. II.—All that portion of the premises No. 78 Clive Street, in the Town of Calcutta, which was allotted to the defendant by the said decree and marked E in the said plan, such portion, the area of which is 1 cottah 10 chitaks and 7 square feet, more or less, is included in Holding No. 272, Block No. VII, and now numbered 78-2 Clive Street, and is bounded on the north by a common passage, on the south by the premises No. 79 Clive Street, on the east by the portion of the premises No. 78 Clive Street, belonging to Raja Boodsing and Bissen Chand Bahadur, and on the west by the portion of the said premises belonging to Sreemutty Chooni Money Dassee and Sreemutty Kamini Dassee.

The abstract of title and conditions of sale may be seen at the office of the said Registrar and at No. 8 Old Post Office Street, the office of Babu Asutosh De, Attorney for the plaintiff, on any day before the sale, and will be produced at the sale.

W. R. FINK, Registrar.

A. T. De, Plaintiff's Attorney.

Calcutta High Court, Original Jurisdiction, the 10th day of July 1902. (428—1—983)

Notification.

TO be peremptorily sold, pursuant to a decree and order of the Calcutta High Court, made in suit No. 426 of 1890 (Hurro Kumar Ghose *versus* Gopal Chunder Dass), and dated, respectively, the 15th day of December 1890 and 4th day of September 1901, by the Registrar of the said Court in his sale-room in the Court-house on Saturday, the 30th day of August next, at the hour of 12 o'clock noon, the undermentioned property :—

All that piece or parcel of land situate at formerly No. 73 (now No. 78) Sikdar Bagan Street, in Calcutta, containing by estimation 3 cottahs 7 chitaks 31 feet, more or less, in Sootanutty, and bounded on the north by the dwelling-house of Lalit Mohun Ruckhit, on the south by Sikdarbagan Street, on the east by a common passage 9 feet wide, on the west by the dwelling-house of Kalla Chand Dass.

The list of title-deeds and conditions of sale may be seen at the office of the Registrar, Original Side, or at the office of Babu Priya Nath Sen at No. 7 Old Post Office Street on any day before the sale and will be produced at the sale.

W. R. FINK, Registrar.

Priya Nath Sen, Plaintiff's Attorney.

High Court, Original Side, the 14th day of July 1902. (480—1—995)

Notification of Sale.

TO be peremptorily sold, pursuant to an order of the Calcutta High Court made in suit No. 778 of 1899 (wherein Sreemutty Sourubiny Dassee is plaintiff and Chooni Lall Bhur and others are defendants), and dated the 7th day of September 1901, by the Registrar of the said Court in its Original Side in his sale-room on Saturday, the 30th day of August next, at 12 o'clock, noon, the following property, viz.—

No. 3 (formerly No. 5) Musjeed Baree Street in Sutanooty in the town of Calcutta, a partly two-storied and partly three-storied brick-built dwelling-house with land thereunto belonging and on part whereof the same is erected and built, containing by estimation 5 cottahs and 9 chitaks, more or less, and bounded on the *north* by Musjeed Baree Street and a private passage, on the *south* by a Municipal drain, on the *east* by the dwelling-house of Kader Nauth Bhattacharjee and others, and on the *west* by the tenanted house of Sham Bewah.

The abstract of title and the conditions of sale may be seen at the office of the undersigned in the Court-house and at the office of Babu Jnanendra Nath Datta, the Attorney for the plaintiff, at No 2 Hastings Street Calcutta.

W. R. FINK, Registrar.

J. N. Datta, Plaintiff's Attorney.

High Court, Original Side, Calcutta the 22nd July 1902. (456—1—996)

Notification.

TO be peremptorily sold by the Registrar of the High Court of Judicature at Fort William in Bengal, Original Side, in his sale-room in the Court-house on Saturday, the 23rd day of August 1902, at 12 o'clock noon, pursuant to the decree and the order of the said Court made in suit No. 282 of 1900 (Satish Chander Roy *versus* Moni Lal Mullick and others), and dated, respectively, the 28th day of June 1900 and the 3rd day of May last, the following properties :—

Lot I.—All that tenanted land situate and lying at and being No. 15 Durponarayan Tagore's Street, Sootanutty, in the Northern Division of the town of Calcutta, containing an area of 5 cottahs 7 chitaks and 25 square feet, more or less, bounded on the north by the premises No. 16 Durponarayan Tagore's Street, on the south by Rutton Sircar's Garden 2nd Lane, on the east by a private drain belonging to the estate of the late Rajendra Mullick, and on the west by a passage common to the premises Nos. 15 and 15-1 Durponaryan Tagore's Street and running southwards from the said Durponarayan Tagore's Street to Rutton Sircar's Garden 2nd Lane, including the right to use such common passage and to open drains and lay down water-pipes, drainage-pipes and gas-pipes beneath it, but to be kept open to the sky and not to be interfered with by the erection or projection of buildings.

Lot II.—All that partly two-and partly three-storied brick-built dwelling-house, together with the rent-free land whereon the same is erected and built, being No 16 Durponarayon Tagore's Street, Sootanutty, in the Northern Division of the town of Calcutta, containing by estimation 3 cottahs 2 chitaks and 39 square feet, and bounded on the north partly by premises No. 16-1 Durponarayan Tagore's Street and partly by Durponarayan Tagore's Street, on the south by the tenanted land being No. 15 Durponarayan Tagore's Street, on the east partly by the said premises No. 16-1 Durponarayan Tagore's Street, and partly by a private drain belonging to the estate of the late Rajendra Mullick, and on the west by a bustee passage running from Durponarayan Tagore's Street southwards and leading to the land and premises Nos. 15 and 15-1 Durponarayan Tagore's Street.

The abstract of title and conditions of sale may be seen at the office of the said Registrar or at the office of Babu Gnanendra Narayan Dutt at No. 4 Strand Road on any day before the sale and will be produced at the sale.

W. R. FINK, Registrar.

Gnanendra Narayan Dutt, Plaintiff's Attorney.

Calcutta High Court, Ordinary Original Civil Jurisdiction, the 18th day of July 1902.

(436—1—988)

Stolen

THE Government Promissory Notes— Rs.

No. 100601,	3½ per cent.	of 1865	...	1,000
„ 100602,	ditto	of „	...	1,000
„ 100603,	ditto	of „	...	1,000
„ 100605,	ditto	of „	...	1,000
„ 100606,	ditto	of „	...	1,000
„ 064315,	ditto	of 1842-43	...	5,000
„ 064316,	ditto	of „	...	5,000
„ 010181,	ditto	of 1879	...	10,000

originally standing in the name of the Bank of Bengal and last endorsed to Gowhar Ali, the proprietor, by whom they were never endorsed to any other person. Payment of the above Notes and the interest thereupon have been stopped at the Public Debt Office, Bank of Bengal, and application is to be made for accrued interest and for the issue of duplicates in favour of the proprietor after two years from the date of last advertisement.

Names of the Proprietors—Laddun Saheba and minors Anwar Ali *alias* Peary Mirza and Yakoob Ali *alias* Chottey Mirza, represented by their mother and certificated guardian, Laddun Saheba, and the minor Badronnessa Bibee, represented by her husband and certificated guardian, Shaik Doman.

Residence—Garden Reach, Paharpoor Road.

(454—3—385)

SALE NOTICE.

In the Court of the Munsif, 2nd Court, Purulia, district Manbhum.

PRESENT:

Babu Kanty Chandra Mukerjea, Munsif.

EXECUTION CASE No. 444 OF 1902.

Mohanunda Chakrabutty, decree-holder, *versus* Brahma Narain Singh, judgment-debtor.

THE following property of the judgment-debtor shall be sold by the Nazir of this Court on the 15th September 1902 at 12 o'clock in the noon for the realisation of Rs. 997-9 :—

Pargana Matha, in the district of Manbhum, thana Bagmoondi, being tauzi No. 13.

Bounded on the east by the limits of Punchakote zamindari, north and west by the limits of pargana Bagmoondi and south by the limits of pargana Patkum.

	Rs.	A.	P.
Revenue payable to Government ...	647	5	9
Annual income	1,647	5	9

K. C. MUKERJEA, Munsif.

Purulia, the 24th July 1902. (445—1)

In the Court of the District Judge of Bhagalpur.

ACT X OF 1865.

CASE No. 16 OF 1902.

Margaret Craig, widow of Robert Craig, of Jamalpur district Monghyr, petitioner.

Notice to John Carlyle and William Fleming, two of the Executors of the Will of the said Robert Craig—Present address not known.

WHEREAS an application under Act X of 1865 for grant of Letters of Administration with a copy of the Will annexed to the estate of Robert Craig, late of Jamalpur, has been made by the abovenamed petitioner, and whereas your names are noted as Executors in the said Will, and whereas the 14th August 1902 has been fixed for the hearing of this case; this is to give you notice that if you desire to act as Executors to the estate of the said deceased you must appear in this Court and take proper steps on or before the date fixed; otherwise the application of the said Margaret Craig will be disposed of *ex-parte*.

Given under my hand and the seal of the Court this the 26th July 1902.

W. H. H. VINCENT, District Judge.

Bhagalpur, the 29th July 1902. (451—1)

In the 2nd Court of the Subordinate Judge of Shahabad.

EXECUTION CASE No. 73 OF 1902.

Golab Chand *alias* Chutan Lall, decree-holder, *versus* Babus Sooraj Narayan Singh, Adit Pershad Singh, Bishunath Singh, Perbhoo Narayan Singh and Lalan Singh, judgment-debtors.

THE following property of the judgment-debtors will be sold by the Nazir of the District Judge on the 1st September 1902 at 12 A.M. for the realisation of Rs. 3,638-8-11 :—

Eight annas out of 16 annas of mauza Bairi Raghunathpore, asli with dakhli, with zeraet land, bearing former tauzi No. 1159 and present tauzi No. 2188, and paying Government revenue Rs. 1,825-14, pargana Chainpore, thana and sub-registry office Bhabhua. The approximate value given by decree-holder is Rs. 400.

GOVINDA CHANDRA DE,

Offg. Subordinate Judge, 2nd Court.

Arrah, the 23rd July 1902. (448—1)

In the 2nd Court of the Subordinate Judge, 24-Parganas.

PRESENT:

Babu Bhugobutty Charan Mitter.

EXECUTION CASE No. 116 OF 1902.

Brajendra Nath Das, decree-holder, *versus* Radhica Charan Banerjea, judgment-debtor.

WILL be sold at public auction on the 11th day of August 1902 in the Court-house at Alipore by the Nazir of the Court for the realisation of Rs. 3,103 and odd due to the decree-holder, the following property of the judgment-debtor :—

Schedule of mortgaged property.

Taluk No. 172-173, situated at Kadihaty, thana Dum-Dum, being 22 bighas, with tank and trees and pucca bungalow thereon, and for which Re. 1 and odd is payable annually to Shib Chandra Roy Choudhry, of Panihaty.

BHUGOBUTTY CHARAN MITTER, Subordinate Judge.

Alipore, the 23rd July 1902. (437—1)

NOTICE.

In the Court of the Subordinate Judge, 1st Court, Shahabad.

EXECUTION CASE No. 133 OF 1902.

Ram Khelawan Sahu and others, decree-holders, *versus* Jaggessar Prasad and others, judgment-debtors.

TO be sold by the Nazir of the District Judge's Court, Shahabad, on the 1st September 1902, at 3 P.M., in the Subordinate Judge's Court-house at Arrah, the undermentioned mortgaged properties of the judgment-debtors Jaggessar Prasad and others for satisfaction of Rs. 60,211-11-5:—

1. 11 annas out of 16 annas, asli with dakhli, mahal Nowan, bearing tauzi No. 3647 of the Shahabad Collectorate, pargana and thana Dinara and sub-registry Sassaram. The annual revenue payable to Government for the entire 16 annas mahal is Rs. 1,280.

2. 16 annas mahal Kokila, asli with dakhli, bearing tauzi No. 1145 of the Shahabad Collectorate, pargana Behea, thana Shahpur, and sub-registry Jagdispur. The annual revenue payable to the Government for the entire 16 annas mahal is Rs. 997-8.

3. 16 annas mahal Ekawne, asli will dakhli, bearing tauzi No. 199 of the Shahabad Collectorate, pargana and thana and sub-registry Arrah. The annual revenue payable to Government for entire 16 annas mahal is Rs. 790 6-5.

4. 16 annas mahal Sarathina, appertaining to mahal Belau, asli with dakhli, bearing tauzi No. 3908 of the Shahabad Collectorate, pargana and thana and sub-registry Arrah. The annual revenue payable to Government for the entire 16 annas mahal is Rs. 6,439-13-5.

5. 16 annas mahal Pasaowra, asli with dakhli, bearing tauzi No. 4582 of the Shahabad Collectorate, pargana and thana Piro and sub-registry Jagdispur. The annual revenue payable to Government for the entire 16 annas mahal is Rs. 4,582.

KARTIK CHANDRA PAL, Subordinate Judge.

Arrah, the 24th July 1902. (447—1)

Estate George Smoult Fagan.

NOTICE is hereby given that all creditors and other persons having any claims against the estate of George Smoult Fagan, late of Calcutta, who died at Suez on the 6th day of May 1875, are hereby required to send in writing the particulars thereof to the undersigned as Solicitors for Oliver Horace Dickinson, of 30-2 Dalhousie Square, Calcutta, to whom Letters of Administration of the unadministered property and credits of the said deceased with copy Will annexed have been granted by the High Court of Judicature at Fort William in Bengal on or before the 1st day of September 1903, after which date no claims will be admitted and the assets of the estate of the said deceased will be distributed. Dated this 21st day of July 1902.

SANDERSON & Co., 30-2 Dalhousie Square, Calcutta.

(441—1—993)

INSOLVENT NOTICES.

In the Court for the Relief of Insolvent Debtors at Calcutta.

In the matter of WALTER RAYMOND GOMES, an insolvent.

On Saturday, the 5th day of July instant, it was ordered that the matters of the petition of the said insolvent be heard on Tuesday, the 5th day of August next, and that the said insolvent do then attend to be examined before the said Court.

Insolvent in person (426—2)

Chief Clerk's Office, the 21st day of July 1902.

In the matter of WOOMA CHARAN GHOSH, BHUGBAT CHUNDER GHOSH, MOHESH CHANDRA GHOSH, and KOYLASH CHUNDER GHOSH, insolvents.

On Tuesday, the 24th day of June last, it was ordered that the matters of the petition of the said insolvents be heard on Tuesday, the 2nd day of September next, and that the said insolvents do then attend to be examined before the said Court.

Kali Mohun Rakshit, Attorney. (458 - 2)

In the matter of AJADHYA NATH MOOKERJEE, an insolvent.

On Tuesday, the 1st day of July instant, it was ordered that the matters of the petition of the said insolvent be heard on Tuesday, the 2nd day of September next, and that the said insolvent do then attend to be examined before the said Court.

Radhica Nath Ganguly, Attorney. (459—2)

In the matter of SARADA PROSAD BANERJI, an insolvent.

On Tuesday, the 3rd day of June last, it was ordered that the matters of the petition of the said insolvent be heard on Tuesday, the 2nd day of September next, and that the said insolvent do then attend to be examined before the said Court.

P. N. Sen, Attorney. (460—2)

In the matter of LEO HAHN, an insolvent.

On Monday, the 23rd day of June last, it was ordered that the matters of the petition of the said insolvent be heard on Tuesday, the 25th day of November next, and that the said insolvent do then attend to be examined before the said Court.

Dignam & Co., Attorneys. (461—2)

In the matter of JOGENDRA NATH ROY, an insolvent.

On Wednesday, the 25th day of June last, it was ordered that the matters of the petition of the said insolvent be heard on Tuesday, the 2nd day of September next, and that the said insolvent do then attend to be examined before the said Court.

Rakhal Chunder Hazra, Attorney. (462—2)

In the matter of BRINDABUN CHUNDER BHUR, an insolvent.

On Friday, the 20th day of June last, it was ordered that this matter be heard on Tuesday, the 2nd day of September next, and that the said insolvent do then attend to be examined before the said Court.

N. C. Roy, Attorney. (463—2)

In the matter of SRI LALL BAGLA, an insolvent.

On Thursday, the 10th day of July instant, it was ordered that the matters of the petition of the said insolvent be heard on Tuesday, the 2nd day of September next, and that the said insolvent do then attend to be examined before the said Court.

Subodh Chunder Mitter, Attorney. (464—2)

In the matter of FELIX ALBERT FRANCIS PAUL DESBRUSLAIS, an insolvent.

On Thursday, the 10th day of July instant, it was ordered that the matters of the petition of the said insolvent be heard on Tuesday, the 2nd day of September next, and that the said insolvent do then attend to be examined before the said Court.

Insolvent in person. (465—2)

In the matter of THOMAS LAWRENCE MACRAE HARRIS, an insolvent.

On Wednesday, the 9th day of July instant, it was ordered that the matters of the petition of the said insolvent be heard on Tuesday, the 2nd day of September next, and that the said insolvent do then attend to be examined before the said Court.

Jogendra Nath Chatterjee, Attorney. (466—2)

In the matter of SURJEE KUMAR BASAK, residing at No. , Pathuriaghatta Street, in the town of Calcutta; Bharat Chandra Basak, residing at No. 20, Brindabun Bysack's Street, in Calcutta, aforesaid; Sarat Chandra Basak, Bheem Chunder Basak, and Charu Chunder Basak, the three last named residing at No. , Ram Chand Ghose's Lane, in Calcutta, aforesaid,—all carrying on business in copartnership under the name style, and firm of Pal & Co. as owners of machine carpentry workshop at the aforesaid premises, No. 20, Brindabun Bysack's Street, in Calcutta, aforesaid, and at Manicktollah, in the suburbs of Calcutta, aforesaid, insolvents.

On Saturday, the 5th day of July instant, it was, on the petition of Sreemutty Brojo Coomary Dassee, residing at No. 20-4, Brindabun Bysack's Street, in the town of Calcutta, a creditor of the said insolvents, adjudged that the said Surjee Kumar Basak, Bharat Chandra Basak, Sarat Chandra Basak, Bheem Chunder Basak, and Charu Chunder Basak, have committed an act of insolvency under the provisions of the Act XI, Vic., Chapter XXI, and by another order of the same date the estate and effects of the said insolvents were vested in the Official Assignee.

M. M. Chatterjee, Attorney. (467—2)

In the matter of ISWAR DAS, an insolvent.

Notice that an application for an *ad-interim* protection order has been this day made by the said insolvent, and that such application will be heard and disposed of by the Acting Commissioner of the Insolvent Court on Monday, the 4th day of August next, at the hour of half-past 10 o'clock in the forenoon.

☞ "Any creditor of the said insolvent desirous of opposing such application must appear before the said Court at the time and place aforesaid."

Opurbo Coomar Gangooly, Attorney. (468—1)

In the matter of KRISTO KISORE DUTT, residing at No. 92, Mohendra Chunder Garden Road, in Dum-Dum, and carrying on business as piece-goods dealer at Nos. 37-38, Monohur Das Chak and at No. 207, Harrison Road, in the town of Calcutta, under the name and style of Krishna Kisore Dutt, and also carrying on business in patent medicines at No. 253, Bowbazar Street in Calcutta, in copartnership with Nundo Kisore Dutt, Raj Kisore Dutt, and Nobo Kisore Dutt,—all of No. 76, Pathuriaghatta Street, in Calcutta, under the name and style of Dutt, Singh & Co., an insolvent.

Notice that the petition of the said insolvent seeking the benefit of the Act XI Vic., Chapter XXI, was filed in the Office of the Chief Clerk on Wednesday, the 2nd day of July instant, and by an order of the same date the estate and effects of the said insolvent were vested in the Official Assignee.

Rajkisore Bysack, Attorney. (469—1)

In the matter of JOGENDRA NATH RAY, residing at No. 4, Roy's Lane, in the town of Calcutta, lately one of the proprietors of the City Theatre, and at present a broker of jewelleries, an insolvent.

Notice that the petition of the said insolvent seeking the benefit of the Act XI Vic., Chapter XXI, was filed in the Office of the Chief Clerk on Friday, the 25th day of June last, and by an order of the same date the estate and effects of the said insolvent were vested in the Official Assignee.

Rakhal Chunder Hazra, Attorney. (470—1)

In the matter of DURGA DUTT and JOWALEE DUTT, of No. 81, Cross Street, in the town of Calcutta, lately carrying on business in copartnership with Kaluram Narmull and Hanooman Dass Murlidhur as yarn merchants under the name and style of Assaram Bajuriah at Calcutta at No. 81, Cross Street, aforesaid, at Cuttack, under the name and style of Durga Dutt Bajuriah, and at Balasore under the name and style of Durga Dutt Bhairobox, and at Bankura under the name and style of Jowalee Dutt Bajuriah, insolvents.

Notice that the petition of the said insolvent, seeking the benefit of the Act XI Vic., Chapter XXI, was filed in the Office of the Chief Clerk on Friday, the 25th day of June last, and by an order of the same date the estate and effects of the said insolvents were vested in the Official Assignee.

Charoo Chunder Bose, Attorney. (471—1)

In the matter of LEO HAHN, at present residing at No. 6, Moira Street, and formerly at No. 5, Rainey Park, Ballygunge, in the suburbs of Calcutta, and lately carrying on business at No. 98-3, Clive Street, in the town of Calcutta, in copartnership with one Martin Rautenberg, since deceased, under the style or firm of Rautenberg & Co., an insolvent.

Notice that the petition of the said insolvent seeking the benefit of the Act XI Vic., Chapter XXI, was filed in the Office of the Chief Clerk on Wednesday, the 23rd day of June last, and by an order of the same date the estate and effects of the said insolvent were vested in the Official Assignee.

Dignam & Co., Attorneys. (472—1)

In the matter of WOOMA CHARAN GHOSE, BHUGBUT CHANDRA GHOSE, MOHESH CHANDRA GHOSE, and KOYLASH CHANDRA GHOSE, all residing at No. 16, Choona Pukur Lane, in the town of Calcutta, and lately carrying on business at the aforesaid place as milkmen in copartnership in Calcutta under the name and style of Mohesh Chandra Ghose, and the said Wooma Charan Ghose also lately carrying on business alone in the same place as milkman under the name and style of Wooma Charan Ghose, all of them at present having no occupation, insolvents.

Notice that the petition of the said insolvents seeking the benefit of the Act XI Vic., Chapter XXI, was filed in the Office of the Chief Clerk on Tuesday, the 24th day of June last, and by an order of the same date the estate and effects of the said insolvents were vested in the Official Assignee.

Kali Mohun Rakshit, Attorney. (473—1)

In the matter of AJADHYA NAUTH MOOKERJEE, residing at No. 30, Jhama Pukur Lane, in the town of Calcutta, common broker for negotiating loans on mortgage and sale of immoveable property, an insolvent.

Notice that the petition of the said insolvent seeking the benefit of the Act XI Vic., Chapter XXI, was filed in the Office of the Chief Clerk on Tuesday, the 1st day of July instant, and by an order of the same date the estate and effects of the said insolvent were vested in the Official Assignee.

Radhica Nauth Gangooly, Attorney. (474—1)

In the matter of SRI LALL BOGLA, residing and formerly carrying on business in co-partnership as brokers in linseed under the name and style of Sri Lall Tungun Ram, at No. 65, Banstollah Street, in the town of Calcutta, and at present without employment, an insolvent.

Notice that the petition of the said insolvent seeking the benefit of the Act XI Vic., Chapter XXI, was filed in the Office of the Chief Clerk on Thursday, the 10th day of July instant, and by an order of the same date the estate and effects of the said insolvent were vested in the Official Assignee.

Subodh Chunder Mitter, Attorney. (475—1)

In the matter of FELIX ALBERT FRANCIS PAUL DESBRUSLAIS, residing at No. 1-2, Moti Lal Seal's Street, in the town of Calcutta, serving as an assistant in the office of the Director-General of the Post Office of India, an insolvent.

Notice that the petition of the said insolvent seeking the benefit of the Act XI Vic., Chapter XXI, was filed in the Office of the Chief Clerk on Thursday, the 10th day of July instant, and by an order of the same date the estate and effects of the said insolvent were vested in the Official Assignee.

Insolvent in person. (476—1)

In the matter of THOMAS LAWRENCE MACRAE HARRIS, residing at No. 4, Canal Street, North Entally, in Calcutta, a Preventive Officer, employed at the Calcutta Customs, an insolvent.

Notice that the petition of the said insolvent seeking the benefit of the Act XI Vic., Chapter XXI, was filed in the Office of the Chief Clerk on Wednesday, the 9th day of July instant, and by an order of the same date the estate and effects of the said insolvent were vested in the Official Assignee.

Jogendra Nath Chatterjee, Attorney. (477—1)

Chief Clerk's Office, the 28th July 1902.

In the matter of TOOLSEE DASS SEAL and KALLY DASS SEAL, insolvents.

On Wednesday, the 9th day of July instant, it was ordered that this matter be set down for hearing on Tuesday, the 5th day of August next, with liberty to the said insolvents at the said hearing to apply that the petition filed in this matter on the 6th day of October 1899 so far as regards the joint creditors of the firm of Dey Sil and Company and the separate creditors of Kally Dass Seal be withdrawn, and that the vesting order made thereon so far as it relates to the joint estate of the said firm of Dey Sil and Company and the separate estate of the said insolvent, Kally Dass Seal, be discharged.

J. C. Dutt, Attorney. (481—1)

Chief Clerk's Office, the 29th day of July 1902.

Notice.

INSOLVENCY CASE No. $\frac{10}{11}$ OF 1901.

SHEIKH ROMJAN, son of Sheik Manu, of Shealdhora, station Nandail zilla Mymensingh, has, on the 28th August 1901, been declared an insolvent, and the Nazir of the Mymensingh District Judge's Court appointed Receiver. The 19th August next is fixed for creditors to prove their debts.

M. YUSUF, Additional District Judge

Mymensingh, the 12th July 1902. (382—1—989)

Notice.

INSOLVENCY CASE No. $\frac{11}{12}$ OF 1901.

SHEIK MAHARAMDI, son of Sheik Manu, of Shealdhora, station Nandail, zilla Mymensingh, has, on the 28th August 1901, been declared an insolvent, and the Nazir of the Mymensingh District Judge's Court appointed Receiver. The 19th August next is fixed for creditors to prove their debts.

M. YUSUF, Additional District Judge

Mymensingh, the 12th July 1902. (383—1—990)

CALCUTTA POST OFFICE NOTICE

Mails for—	Date and hour of closing at the General Post Office, Calcutta.		Route by which despatched.
	1902.	P.M.	
United Kingdom, Aden, Egypt, Europe, America, West Africa *vid* United Kingdom and East Africa *vid* Aden (and also South Africa, if superscribed on the cover *vid* United Kingdom or Aden).	31st July	At 6-30	Per P. & O. steamer from Bombay.
Parcels and money-orders for the United Kingdom and other Foreign places.	30th ,,	Parcels P.M. At 5 M.-O. P.M. At 4	Ditto ditto
* Australasian Colonies ...	4th Aug.	,, 7-30	*Vid* Tuticorin and Colombo.*
Burma	31st July	,, 7-30	Per B. I. S. N. Co.'s steamer.
Burma, Penang and Singapore.	2nd Aug.	,, 7-30	Ditto ditto.
Akyab, Kyaukpyu and Sandoway.	2nd ,,	,, 7-30	Ditto ditto.
Burma, Tavoy and Mergui ...	4th ,,	,, 7-30	Ditto ditto.
Port Blair	1st ,,	,, 7-30	Per steamer *Shahjehan*.
Ditto	4th ,,	,, 7-30	*Vid* Rangoon.
South Africa (Letters) ...	30th July	,, 6	Per* steamer *Englishman* from Bombay.
Ditto (Parcels for Natal and Cape Colony only).	30th July	,, 5	Per* steamer *Englishman* from Bombay.

* Although the date entered in column 2 is, as far as can be calculated, the latest safe date of posting for the next Mail steamer, full allowance being made for the steamer being in advance of her published timing, Mails for the places mentioned in column 1 are despatched daily to Colombo, so that they may proceed by any steamer that has been unusually accelerated or retarded, or by any special opportunity that may be afforded by a steamer not belonging to one of the regular lines.

† Correspondence for China and Japan is despatched daily to Colombo, so that they may proceed by the first steamer available.

1. The letter-box for Inland articles will be cleared for the forenoon Mails at the following hours:—

For Goalundo, Arakan and Chittagong, at 5-30 A.M.
For Midnapore and Orissa districts, at 8-30 A.M.
For the Eastern districts, as far as Dacca and Mymensingh, at 6-30 A.M.
For Khulna and Jessore districts, at 7-30 A.M.
For Bombay, Central Provinces and Midnapore, *vid* Bengal-Nagpur Railway, at 10-45 A.M., and with a late fee of ½ anna up to 11-35 A.M.

2. The letter-box will be cleared for the evening Mails at the following hours, viz:—

For the East Indian Railway Loop Mail, at 2-30 P.M., and with a late fee of ½ anna up to 2-55 P.M.
For the Northern Bengal, Darjeeling and Assam Mails, at 3-25 P.M., and with a late fee of ½ anna up to 3-50 P.M.
For the Bombay Mail, *vid* Jubbulpore, at 6 P.M., and with a late fee of ½ anna up to 6-30 P.M.
For the Punjab Mail, at 7-30 P.M.
For Midnapore, Orissa and Madras Presidency, at 7-30 P.M. } and with a late fee of ½ anna up to 8 P.M. and with a late fee of 1 anna up to 8-45 P.M.
For the Khulna Mail, at 7-30 P.M.
For the Eastern Bengal Mail, at 7-30 P.M.

3. Late registered letters will be received between the following hours:—

For the Bombay Mail, *vid* Jubbulpore, from 5 P.M. to 6-15 P.M.
For the Punjab Mail, from 6 P.M. to 7 P.M.
For the Eastern Bengal Mail, from 6 P.M. to 7 P.M.
For the Khulna Mail, from 6 P.M. to 7 P.M.
For Midnapore, Orissa and the Madras Presidency, from 6 P.M. to 7 P.M.

NOTE.—The late fee on each registered letter will be 2 annas which must be prepaid in stamps on the letter.

4. Articles for Burma and for Port Blair by sea are received without late fee up to 7-30 P.M., and with a late fee of ½ anna up to 8 P.M.

5. On the latest safe day of despatch of Mails for the Australasian Colonies, or any other Foreign Countries, *vid* Madras or Tuticorin, the letter-box for Foreign articles will be cleared for the last time at 7-30 P.M., and late letters and papers fully prepaid will be received up to 8-45 P.M.

6. On the day of despatch of the Mail for Europe (Thursday), the letter-box for Foreign articles will be cleared for the last time, for articles, without the late fee, at 6-30 P.M., and late letters and papers fully prepaid will be received up to 6-45 P.M. Late registered articles will be received from 5 to 6 P.M. On other days the letter-box for Foreign articles will be cleared for the last time, without the late fee, at 6 P.M., and late letters and papers will be received up to 6-30 P.M. for despatch by any Foreign Mails, *vid* Bombay, the same night and up to 8-30 P.M., late letters and papers up to 9 P.M., for any Foreign Mails despatched by sea. Foreign Mails for despatch *vid* Madras or Tuticorin are received up to 7-30 P.M., and with a late fee up to 8-45 P.M. The late fee for Foreign articles is 4 annas, which must be prepaid in stamps affixed to the articles.

JOHN OWENS,
Presidency Postmaster.

CALCUTTA G. P. O.,
The 29th July 1902.

NADIA RIVERS.

Report showing the least depths of water for the week ending Friday, the 25th July 1902.

Name of river.	Reach of river.	Least depth of water sounding.	Remarks.
		Ft. In.	
Bhagirathi.	Entrance from Ganges	14 9	
	Thence to Giriah	11 3	Momentola.
	From Giriah to Jangipur ...	12 6	Alumpur.
	,, Jangipur to Berhampore	10 0	Sushpur.
	,, Berhampore to Katwa	9 0	Mirzapur.
	,, Katwa to Nadia ...	12 0	Dewangunge.
Bhyrub-Jalangi.	Entrance from Ganges ...	13 6	
	Thence to Akriganj ,, ...	13 6	Chokharpara.
	Akriganj to junction of the Bhyrub and Jalangi	12 9	Purandapur.
	Thence to Patkabari	17 0	Lalnagar.
	Patkabari to Nadia	13 0	Shahibnagar.
Mathabhanga.	Entrance from Ganges ...	12 0	
	Thence to Dewanganj . .	13 0	Jamalpur.
	From Dewanganj to Shikarpur	11 0	Ayadanga.
	,, Shikarpur to Boalia ...	11 0	Bunapara.
	,, Boalia to Chuadanga ...	11 9	Bhangboria.
	,, Chuadanga to Kissenganj and Hanskhali..	10 0	Raipur.

Gauge Readings.

	Locality.	Date.	Hour.	Height above zero.	Height above mean sea level.	Remarks.
			A.M.	Ft.	Ft.	
Ganges ...	Sahebganj ...	26-7-1902	6	18·00	86·00	Rising.
	Rampur Boalia...	26-7-1902	Noon	16·85	58·85	Do.
	Entrance of Bhagirathi Geriah...	27-7-1902	A.M. 7	...	69·15	Do.
	Entrance of Bhyrub Jalangi Akhriganj ...	27-7-1902	A.M. 7	...	58·00	Do.
Bhagirathi.	Entrance of Mathabhanga ...	26-7-1902	...	15·25	...	Do.
	Jangipur ...	27-7-1902	...	...	65·15	Do.
	Berhampore ...	28-7-1902	A.M. 10	21·02	55·67	Do.
	Katwa ...	25-7-1902	P.M. 6	23·20	58·36	Do.
Jalangi	Krishnagar ...	25-7-1902	...	15·50	...	Do.
	Sarupganj ...	26-7-1902	Noon	...	19·70	Do
Mathabhanga.	Hanskhali ...	26-7-1902	...	12·20	...	Do.

A. K. BANERJEE, *Accts.*,
For *Exe. Engr., Nadia Rivers Division.*

Berhampore, the 28th July 1902.

GOVERNMENT PUBLICATIONS FOR SALE

At the Bengal Secretariat Book Depôt, Writers' Buildings, Calcutta, and by the following Agents :—

AGENTS IN INDIA.

Messrs. Thacker, Spink & Co., Calcutta and Simla.
Messrs. Newman & Co., Calcutta.
Messrs. Higginbotham & Co., Madras.
Messrs. Thacker & Co., Ld., Bombay.
Messrs. A. J. Combridge & Co. Bombay.
Mr. E. Seymour Hale, 53 Esplanade Road, Fort, Bombay, and Calcutta.
The Superintendent, American Baptist Mission Press, Rangoon.
Messrs. S. K. Lahiri & Co., Printers and Booksellers, College Street, Calcutta.
Rai Sahib M. Gulab Singh & Sons, Proprietors of the Mufid-i-am Press, Lahore, Punjab.
Messrs. V. Kalyanarama Iyer & Co., Booksellers, &c., Madras.
Messrs. D. B. Taraporevala, Sons & Co., Booksellers, Bombay.

AGENTS IN ENGLAND.

Mr. E. A. Arnold, 37 Bedford Street, Strand, London.
Messrs. Constable & Co., 2 Whitehall Gardens, London.
Messrs. Sampson Low, Marston & Co., St. Dunstan's House, Fetter Lane, London.
Messrs. Luzac & Co., 46 Great Russell Street, London.
Messrs. Kegan Paul, Trench, Trübner & Co. Charing Cross Road, London.
Mr. B. Alfred Quaritch, 15 Piccadilly, London.
Messrs. P. S. King & Son, 2 & 4 Great Smith, Street, Westminster, London.
Messrs. H. S King & Co., 65 Cornhill, London.
Messrs. Williams and Norgate, Oxford.
Messrs. Deighton Bell & Co., Cambridge.

AGENTS ON THE CONTINENT.

Messrs. R. Friedlander & Sohn, Berlin, N. W. Carlstrasse, 11.
Mr. Otto Harrassowitz, Leipzig.
Mr. Karl Hiersemann, Leipzig.
Mr. Ernest Leroux, 28 Rue Bonaparte, Paris.
Mr. Martinus Nijhoff, The Hague.

NOTICE.—Books required for private use can be purchased. Applications should be accompanied by a remittance in each case.

All remittances on account of subscriptions to, or prices of, Gazettes, Indian Law Reports or other Government publications available for sale at the Bengal Secretariat Book Depôt, or for cost of advertisements published in the Gazettes should, in future, be made payable to the "Treasurer, Bengal Secretariat, Calcutta." Advices of such remittances, if separately sent, should be addressed to the "Accountant, Bengal Secretariat." All advertisements intended for publication in the *Calcutta* or *Bengali Gazette* should be sent direct to the Superintendent, Government Printing, Bengal.

Books required for the Public Service should be obtained through the Heads of Departments.

☞ *The amounts within parentheses are for packing and postage.*

NEW PUBLICATIONS ISSUED DURING THE CURRENT QUARTER.

APPOINTMENT DEPARTMENT.

Quarterly Civil List of Bengal, corrected up to 1st July 1902. Super-Royal 8vo. Paper cover. Re. 3. (4*a*.)

GENERAL DEPARTMENT.

Report of Emigration from the Port of Calcutta to British and Foreign Colonies, 1901. By the Protector of Emigrants, Calcutta. F'cap. Paper cover. 12*a*. (1*a*.)

LEGISLATIVE DEPARTMENT.

The Bengal Vaccination Act, 1880 (Bengal Act V of 1880), as modified up to 1st June 1902. Royal 8vo. Paper cover. Price 4*a*. (1*a*.)

The Salt Act, 1864 (Bengal Act VII of 1864), as modified up to 1st July 1902, with an appendix showing the extent to which the Indian Salt Act, 1882, is in force in Bengal. Royal 8vo. Paper cover. 8*a*. (1*a*.)

POLITICAL DEPARTMENT.

Administration Report on the Jails of Bengal for the year 1901. F'cap. Board. Paper cover. Re. 8. (3*a*.)

PUBLIC WORKS DEPARTMENT.

Electric Traction.—Six lectures delivered in March 1902 at the Civil Engineering College, Sibpur, by J. W. Meares, Esq., Electrical Engineer to the Government of Bengal. Royal 8vo. Full cloth. Re. 1-8. (2*a*.)

Classified List and Distribution Return of Establishment of the Public Works Department, Bengal, Corrected up to 30th June 1902. Super-Royal 8vo. Paper cover. 4*a*. (1*a*.)

REVENUE DEPARTMENT.

Season and Crop Report of Bengal for the year 1901-1902 F'cap. Paper cover. 8*a*. (1*a*.)

The Sale Law Manual, a Manual of the Revenue and the Patni Sale Laws with Notes and the rules, &c., under them. Royal 8vo. Board. Paper cover. Re. 1-4. (3*a*.)

Price-list of staple food-crops in the local areas of Bengal, for the period from 1st January to 31st March 1901. F'cap. Board. Paper cover. Re 1. (2*a*.)

Rules for the keeping and inspection of accounts of collections in Government and Wards' Estates. Published under the authority of the Board of Revenue, L. P. Royal 8vo. Board. Paper cover. As. 8*a*. (1*a*.).

PUBLICATIONS ISSUED BETWEEN THE 1ST JANUARY AND THE 30TH JUNE 1902.

APPOINTMENT DEPARTMENT.

Quarterly Civil List of Bengal corrected up to 1st April 1902. Super-royal 8vo. Paper cover. Price Rs. 3. (4*a.*)

FINANCIAL DEPARTMENT.

The Stamp Manual, 1902. A Manual for the guidance of officers in the administration of the Stamp Department. Royal 8vo. Board. Paper cover. Price Re. 1-8 (6*a.*)

Annual Report on the consumption of Stationery in Bengal during 1900-1901. F'cap. Paper cover. Rs. 3. (2*a.*)

GENERAL DEPARTMENT.

List of Officers in the Subordinate Educational Service, Bengal, corrected up to 1st April 1902. F'cap. Paper cover. 8*a.* (1*a.*)

JUDICIAL DEPARTMENT.

Question Papers set at the Pleadership and Muktearship Examinations for the year 1902. Royal 8vo. Paper cover. Price 2*a.* (1*a.*)

Question Papers set at the Examination of candidates for appointment as Sub-Inspectors of Police, July and November 1901. Royal 8vo. Paper cover. Price 5*a.* (1*a.*)

Question Papers set at the Examination of candidates for recruiting the staff of Superior Police Officers in Bengal and Assam, held in November 1901. Royal 8vo. Paper cover. Price 8*a.* (1*a.*)

LEGISLATIVE DEPARTMENT.

The Court of Wards' Act, 1879 (Bengal Act IX of 1879), in Hindi, as modified up to the 1st July 1901. Royal 8vo. Paper cover. Price 6*a* (1*a.*)

The Calcutta Port Act, 1890 (Bengal Act III of 1890), as modified up to 1st April 1902. Royal 8vo. Paper cover. Price 10*a.* (1*a.*)

MUNICIPAL DEPARTMENT.

Annual Returns of the Lunatic Asylums in Bengal with brief notes for the year 1901. Compiled by the Inspector-General of Civil Hospitals. F'cap. Paper cover. Price Re. 1. (2*a.*)

Account Rules under the Local Self-Government Act, Part VIII. F'cap. Paper cover. Price 8*a.* (.)

Annual Report of the Chemical Examiner's Department, Bengal, 1901. F'cap. Paper cover Price 8*a.* (2*a.*)

PUBLIC WORKS DEPARTMENT.

Distribution Return of Officers and Subordinates employed on Local Works in Bengal, corrected up to 31st December 1901. Super-royal 8vo. Paper cover. Price 2*a.* (1*a.*)

Embankment and Drainage Report of the Government of Bengal, Irrigation Department, for the year 1900-1901. F'cap. Boards Paper cover. Price Re. 2 (3*a.*)

Classified List and Distribution Return of Establishment corrected up to 31st March 1902. Super-royal 8vo. Paper cover. Price 4*a.* (1*a.*)

Dacca Electric Lighting License, 1902. F'cap. Paper cover. Price 14*a.* (1*a.*)

Notes on the construction of Railways in India (for students) with 5 charts. F'cap Paper cover. Price Re. 1. (1*a.*)

REVENUE DEPARTMENT.

Annual Report of the Burdwan Experimental Farm for the year 1900-1901. F'cap. Paper cover. Price 3*a.* (1*a.*)

Annual Report on the Survey Operations in Bengal during the year 1900-1901 (from 1st October 1900 to 30th September 1901). F'cap. Paper cover. Price Re. 1-8. (2*a.*)

Annual Report of the Director of the Department of Land Records, Bengal, on Settlements, for the year ending 30th September 1901. F'cap. Paper cover. Price 8*a.* (1*a.*)

The Practice and Procedure Manual, published under the authority of the Board of Revenue. Royal 8vo. Board. Paper cover. Price 12*a.* (3*a.*).

OLDER PUBLICATIONS.

A General Catalogue of all Government Publications (corrected up to 31st December, 1901) may be obtained *gratis* on application to the Officer in charge, Bengal Secretariat Book Depôt.

Publications for sale at the office of the Chief Inspector of Explosives with the Government of India.

Rules for the manufacture, possession and sale of explosives issued by each of the Local Governments and Administrations. Price 12*a.*

Rules for the transport and importation of explosives issued by the Government of India. Price 12*a.*

Rules for the transport and importation of explosives at the Port of Calcutta. Price 4*a.*

GOVERNMENT PUBLICATIONS FOR SALE

BY THE SUPERINTENDENT OF GOVERNMENT PRINTING, INDIA, 8 HASTINGS STREET, CALCUTTA.

[A General Catalogue of all Government Publications may be obtained gratis from the Government Central Press, Calcutta.]

All books published by the Superintendent of Government Printing, India, can be purchased, either directly or through the following or any other booksellers:—

AGENTS IN INDIA.

Messrs. Thacker, Spink & Co., Calcutta and Simla.
Messrs. Newman & Co., Calcutta.
Messrs. Higginbotham & Co., Madras.
Messrs. Thacker & Co., Ld., Bombay.
Messrs. A. J. Combridge & Co., Bombay.
Messrs. V. Kalyanarama Iyer & Co., Madras.
Messrs. D. B. Taraporevala, Sons & Co., Bombay
Superintendent, American Baptist Mission Press, Rangoon.
Rai Sahib M. Gulab Singh and Sons, Mufid-I-Am Press, Lahore.
Manager, Educational Book Depôts, Nagpur and Jubbulpore.*
Manager of the Imperial Book Depôt, 63 Chandni Chauk Street, Delhi.*
Manager, "East Coast News," Vizagapatam *
Manager, "The Agra Medical Hall and Co-operative Association, Limited" (Successors to A. John & Co.), Agra.*
Mr. T. K. Sectharama Aiyar, Kumbakonam.*
Lala Debi Prasad, Vakil and Manager of Law Press, Cawnpore *

AGENTS IN EUROPE.

Mr. E. A. Arnold, 37 Bedford Street, Strand, London.
Messrs. Constable & Co., 2 Whitehall Gardens, London.
Messrs. Sampson Low, Marston & Co., St. Dunstan's House, Fetter Lane, London.
Messrs. Luzac & Co., 46 Great Russel Street, London.
Messrs. Kegan Paul, Trench, Trübner & Co., Charing Cross Road, London.
Mr. B. Alfred Quaritch, 15 Piccadilly, London.
Messrs. P. S. King and Son, 2 & 4 Great Smith Street, Westminster.
Messrs. H. S. King & Co., 65 Cornhill, London, are also Agents for the sale of the Indian Army List.
Mr. Otto Harrassowitz, Mr. Karl Hiersemann } Leipzig.
Messrs. R. Friedlander & Sohn, Berlin, N. W. Carlstrasse, 11.
Mr. Ernest Leroux, 28 Rue Bonaparte, Paris.
Mr. Martinus Nijhoff, the Hague, Holland.
Messrs. Williams and Norgate, Oxford.
Messrs. Deighton Bell & Co., Cambridge.

* Agents for sale of the Legislative Department publications.

NOTICE.—Books and Acts required for private use only can be purchased. Applications should be accompanied by a remittance, unless it is wished that the books should be sent by value-payable post, in which case, besides the ordinary postage, an additional charge is made for registration and commission.

Books and Acts required for the public service should be obtained through Local Governments to whom the applicant is subordinate.

Applications for Government publications which are no longer in print should be made to the Agents of the particular Government under whose orders they were originally issued.

The amounts within parentheses are for packing and postage.

List of New Books published during the Current Quarter.

FINANCE AND COMMERCE DEPARTMENT.

List of Officers in the Finance and Commerce Department. Corrected to 1st May 1902. Royal 8vo. Paper cover. 4*a.* or 5*d.* (1*a.*)

Statistics compiled from the Finance and Revenue Accounts of the Government of India. Receipts and Disbursements of Home and Indian Accounts from 1st April 1892 to 31st March 1900. F'cap. Board. Rs. 2 or 3*s.* (7*a.*)

STATISTICAL DEPARTMENT.

Review of the Trade of India in 1901-1902. F'cap. Paper cover. 8*a.* or 9*d.* (2*a.*)

Statistics of Cotton Spinning and Weaving in the Indian Mills in April, 1902, and in the corresponding month of 1900 and 1901. Royal 8vo. Stitched. 2*a.* or 2*d.* (1*a.*)

Accounts of the External Land Trade of British India for the month of April 1902. Royal 8vo. Stitched. 8*a.* or 9*d.* (2*a.*)

MILITARY DEPARTMENT.

List of Light houses and Light-vessels in British India, including those in the Gulf of Aden as existing at the end of 1901. 21st Issue. Royal 8vo. Board. Re. 1 or 1*s.* 6*d.* (2*a.*)

PUBLIC WORKS DEPARTMENT.

Administration Report on the Railways in India for the calendar year 1901. F'cap. Paper cover. Rs 2 or 2*s.* 6*d.* (8*a.*)

List of Books published from January to June 1902.

LEGISLATIVE DEPARTMENT.

ronological Tables of the Indian Statutes compiled, under the orders of the Government of India, by F. G. Wigley, Esq. Royal 8vo. Cloth. *Rs.* 4 or 6*s.* (7*a.*)

The Indian Penal Code (Act XLV of 1860), as modified up to the 1st July 1899, and with foot-notes brought down to 1st April 1901. *Rs.* 2-8 or 3*s.* 9*d.* (6*a.*)

The Indian Factories Act, 1881, as modified up to the 1st April 1891 (with foot-notes brought down to 1st July 1901). 5*a.* 6*p.* or 6*d.* (1*a.* 6*p.*)

Effect of Legislation for 1898, 1899, and 1900. *Re.* 1 or 1*s.* 6*d.* (2*a.*)

Chronological Tables of the Indian Statutes, 1901. *Re.* 1 or 1*s.* 6*d.* (2*a.*)

A Digest of Indian Law Cases, Vol. III. Cloth bound. *Rs.* 12 or 18*s.* (10*a.*)

Ditto ditto ditto. Quarter bound. *Rs.* 13 or 19*s.* 6*d.* (10*a.*)

Act IX of 1901. An Act further to amend the Indian Articles of War. 1*a.* or 1*d.* (1*a.*)

Act X of 1901. An Act further to amend the Court-fees Act, 1870. 1*a.* 3*p* or 1*d.* (1*a.*)

Act XI of 1901. An Act to facilitate the cita-tion of certain Enactments and to amend and repeal certain obsolete Enactments.

Regulation III of 1901. A Regulation further to provide for the suppression of crime in certain frontier districts. 7*a.* 6*p.* or 9*d.* (1*a.* 6*p.*)

Regulation IV of 1901. A Regulation to make better provision for the suppression of murderous outrages in certain frontier tracts. 2*a.* 6*p.* (1*a.*)

Regulation V of 1901. A Regulation further to amend the Upper Burma Land and Revenue Regulation, 1899. 1*a.* 9*p.* or 2*d.* (1*a.*)

Regulation VI of 1901. A Regulation to re-peal so much as is unrepealed of the Punjab Frontier Regulation, 1872, and of the Hazara Settlement Rules, 1*a.* or 1*d* (1*a.*)

Regulation VII of 1901. A Regulation to alter certain of the laws in force in the North-West Frontier Province, to declare that certain Enactments are in force therein, and to bar the application of certain others hereto. 11*a.* or 1*s.* 3*d.* (2*a.*)

Corrigendum slip for Act XIII of 1900. 1*a.*

Title-page and Contents to Acts of 1901. 1*a.* 6*p.* (1*a.*)

Index to Acts of 1901. 2*a.* 9*p.* or 3*d.* (1*a.*)

The European Vagrancy Act, 1874 (IX of 1874), as modified up to 1st December, 1901. 6*a.* 6*p.* or 7*d.* (1*a.*)

The Chaukidars Act, 1856 (XX of 1856), as modified up to 1st December, 1901. 7*a.* 6*p.* or 8*d.* (1*a.*)

The Registration of Ships Act, 1841 and 1850 (X of 1841 and XI of 1850), as modified up to 1st December 1893, and with foot-notes brought down to 1st December, 1901. 7*a.* or 7*d.* (1*a.*)

Table showing the effect of Legislation in the Governor-General's Council during 1901. 6*s.* or 6*d.* (1*s.*)

LIST OF TRANSLATIONS AND TRANSLITERATIONS OF ACTS PUBLISHED FROM 1ST OCTOBER 1901 TO 31ST MARCH 1902.

The Cattle-trespass Act, 1871 (I of 1871), as modified up to the 1st April 1901. In Urdu. 2*a.* (1*a.*)

Ditto. In Hindi. 2*a.* (1*a.*)

Act IX of 1901 (an Act further to amend the Indian Articles of War). In Urdu. 3*p.* (1*a.*)

Ditto. In Hindi. 3*p.* 1*a.*

Act X of 1901 (an Act further to amend the Court-fees Act, 1870). In Urdu. 3*p.* (1*a.*)

Ditto. In Hindi. 3*p.* (1*a.*)

HOME DEPARTMENT.

Chronological Tables for 1902, embodying Notifications by the Government of Bengal and Government of India prescribing holidays during the year with corresponding dates in English, Bengali, Velati, Fusli etc. Royal 8vo. Paper cover. 4*a.* or 4*d.* (1*a.*)

Annual Report of the Sanitary Commissioner with the Government of India, 1900, with Appendices and Returns of Sickness and Mortality among European Troops, Native Troops, and Prisoners in India, for the year, F'cap. Boards, *Rs.* 3 or 4*s.* 6*d.* (8*a.*)

Report of Proceedings of the Central Indigen-ous Drugs Committee of India, Volume I. Royal 8vo. Board. Rs. 3-8 or 5*s.* 3*d.* (7*a.*)

List of Europeans and others in the English Factories in Bengal at the time of the Siege of Calcutta in the year 1756, with an appendix containing lists of European Sufferers. By S. Charles Hill, Esq., B.A., B.SC. Super-Royal 4to. Paper cover. Rs. 2 or 3*s.* (3*a.*)

Judicial and Administrative Statistics for British India. 6th issue, 1900-1901, and preceding years. F'cap. Board. Rs. 2 or 3*s.* (10*a.*)

The Countess of Dufferin's Fund Seventeenth Annual Report of the National Association for Supplying Female Medical Aid to the Women of India for the year 1901. Super-Royal 8vo. Re. 1 or 1*s.* 4*d.* (3*a.*)

DEPARTMENT OF REVENUE AND AGRICULTURE.

List of Officers in the Survey and other Scien-tific and Minor Departments subordinate to the Government of India in the Department of Revenue and Agriculture, corrected to 1st July 1901. Royal 8vo. Paper cover. 8*a.* or 9*d.* (2*a.*)

Report of the Committee on the Establish-ment of Co-operative Credit Societies in India. F'cap. Paper cover. 4*a.* or 5*d.* (2*a.*)

Forest Flora of the School Circle, North-Western Provinces, being a descriptive list of the indigenous woody plants of the Shaharanpur and Dehra Dun districts and the adjoining portions of the Tehri-Garhwal State in the North-Western Provinces, with Analyses. Double-Crown. 16mo. Full cloth. Re. 1-8 or 2*s.* (3*a.*)

Archæological Exploration in Chinese Turke-stan. By Dr. M. A. Stein. Royal 4to. Cloth. Rs. 4 or 6*s.* (4*a.*)

Land Revenue Policy of the Indian Govern-ment. Royal 8vo. Cloth. 10*a.* or 1*s.* (4*a.*)

FOREIGN DEPARTMENT.

Report on the Administration of the Baluchis-tan Agency for 1900-1901. Re. 1-8 or 2*s.* 3*d.* (3*a.*)

Report on the Administration of the Hyder-abad Assigned Districts for the year 1900-1901. F'cap. Limp cover. Rs. 3-12 or 5*s.* 6*d.* (6*a.*)

Report on the Political Administration of the territories within the Central India Agency for 1900-1901. F'cap. Limp cover. *Re.* 1-8 or 2*s.* (3*a.*)

Annotated Returns of the Dispensaries in Central India for 1900. F'cap. Limp cover. *Re.* 1-8 or 2*s.* (3*a.*)

Report on the Administration of the Civil and Military Station of Bangalore for the year 1900-1901. F'cap. Board. 3*a.* or 9*d.* (2*a.*)

Grammar and Vocabulary of Waziri Pashto. By J. G. Lorimer, Esq., I.C.S. Royal 8vo. Board. Rs. 3 or 4*s.* 6*d.* (5*a.*)

FINANCE AND COMMERCE DEPARTMENT.

List of Officers in the Finance and Commerce Department. Corrected to December 1901; to April 1902. 4*a.* or 5*d.* (1*a.*) each.

Papers relating to the proposed Establish-ment of a Central Bank in India. F'cap. Board. Re. 1 or 1*s.* 6*d.* (4*a.*)

Administration Report of the Mint at Bombay and Calcutta for 1900-1901. F'cap. Paper cover. Re. 1 or 1*s.* 6*d.* (2*a.*)

Schedule IV of the Indian Tariff Act (VIII of 1878) of 1902. Royal 8vo. Stitched. 6*a.* or 6*d.* (1*a.*)

STATISTICAL DEPARTMENT.

Trade and Navigation Accounts of British India for the months of December 1901 to May 1902. Royal 8vo. Stitched. 8*a.* or 9*d.* (2*a.*) each.

Accounts of the External Land Trade of British India for the months of September 1901 to March 1902. Royal 8vo. Stitched. 8*a.* or 9*d.* (2*a.*) each.

Accounts relating to the Trade carried by Rail and River in India in the quarter ending September 1901. Compared with the corresponding periods of the years 1899 and 1900. No. 2 of 1901-1902. F'cap. Paper cover. 8*s.* or 9*d.* (2*a.*)

Ditto ditto ending December 1901. Compared with the corresponding periods of the years 1899 and 1900. No. 3 of 1901-1902. F'cap. Paper cover. 8*a.* or 9*d.* (2*a.*)

Accounts of the Trade of the French Possessions in India in the year ending 31st March 1901, and the four preceding years. F'cap. Paper cover. 2*a.* or 3*d.* (1*a.*)

Statistics of Cotton Spinning and Weaving in the Indian Mills in January, February, and March 1902; in the ten months, April 1901 to January 1902; in the eleven months, April 1901 to February 1902, and in the twelve months, April 1901 to March 1902. Compared with the corresponding period of 1899-1900 and 1900-1901. Royal 8vo. Stitched. 2*s.* or 2*d.* (1*a.*) each.

Accounts of the Trade of Aden in the year ending 31st March 1901, and the four preceding years. F'cap. Paper cover. 10*a.* or 1*s.* (2*a.*)

Accounts of the Trade of the Portuguese Possessions in India in the year 1899-1900 and the four preceding years. F'cap. Paper cover. 2*a.* or 3*d.* (1*a.*)

Prices and Wages in India. Nineteenth issue, 1902. Super-Royal 4to. Board. Re. 1-8 or 2*s* (9*a.*)

COMPTROLLER-GENERAL.

Finance and Revenue Accounts of the Government of India for 1900-1901. F'cap Board. Rs. 2 or 3*s.* (8*a.*)

Appropriation Report on the Accounts of the Government of India for 1900-1901. By A. F. Cox, Esq. F'cap. Board. 8*a.* (5*a*).

MILITARY DEPARTMENT.

The Monthly Indian Army List for February to March, May, June 1902. Royal 8vo. Paper cover. Re. 1-8 or 2*s.* 3*d.* (4*a.*) each.

Return of Wrecks and Casualties in Indian Waters for the year 1900. F'cap. Stiff cover. 12*a.* or 1*s.* (3*a.*)

Military Works Services Classified List and Distribution Return. Corrected up to 31st December 1901. Royal 8vo. Paper cover. 4*a.* or 5*d.* (1*a.*)

ndian Military Budget Estimate for the year 1902-1903. F'cap. Board. Re. 1-8 or 2*s.* 3d. (8*a.*)

PUBLIC WORKS DEPARTMENT.

Public Works Department Classified List and Distribution Return of Establishment. Corrected up to 31st December 1901. Super-Royal 8vo. Paper cover. Rs. 2 or 3*s.* (4*a.*)

Classified List (Public Works Department), Subordinate Establishment. Corrected up to 31st December 1901. Super-Royal 8vo. Paper cover. 4*a.* or 4*d.* (1*a.*)

Budget Estimate of the Indo-European Telegraph Department for the year 1902-1903. F'cap. Paper cover. 8*a.* or 9*d.* (1*a.* 6*p.*)

Budget Estimate of the Indian Telegraph Department for the year 1902-1903. F'cap. Paper cover. 8*a.* or 9*d.* (1*a.* 6*p.*)

History of Services of the Officers of the Engineer, Accounts, and State Railway Revenue Establishments. Corrected to 31st December 1901. In two Volumes. Royal 8vo. Board. Vol. I, Rs. 2-8 or 3*s.* 9*d.* (6*a.*). Vol. II Rs. 2-8 or 3*s*, 9*d.* (6*a.*) Complete, Rs. 5 or 7*s.* 6*d.* (9*a.*)

List of new books for sale at the Thomason College, Roorkee, which were not advertised before.

Roorkee Treatise on "Railways," 4th Edition, revised by F. Wolley Dod, F.C.H. Price, Rs. 3 per copy.

Roorkee Treatise on "Irrigation Works." By Lieutenant-Colonel J. Clibborn, I.S.C., B.A., L.C.E., C.I.E. Price Rs. 9 per copy.

Roorkee Treatise on "Sanitary Engineering." Compiled by Lieutenant-Colonel J. Clibborn, I.S.C., B.A., L.C.E., C.I.E. Price, Rs. 4-8 per copy.

Roorkee Manual of "Applied Mechanics," Volume II. The stability of structures mostly by graphic methods, by Lieutenant-Colonel J. H. C. Harrison, R.E. Price, Rs. 8-2 per copy.

Roorkee Manual of Hydraulics. Price per copy, Re. 1-4. (No. XIX, Elementary Treatise). By E. F. Tipple, Esq., B.A.

Designs for Wooden Bridges, together with rules for calculating the area of waterway, &c., and Plates. By late Rai Bahadur Kunhya Lal. Price per set, Rs. 4-2.

Pamphlet on Examination for Acid Radicals: Tables giving Analysis of Acids. Price per copy, 8*a.*

Pamphlet on Examination for Acid Bases: Tables giving Analysis of Metallic Bases. Price, 8*a.* per copy.

Pamphlet on Note on Masonry Arches (College publication). Price, 4*a.* per copy.

Pamphlet on Small Direct Well Pumping Installations. Price, 4*a.* per copy.

Pamphlet on Experiments made on the passage of water through the sand of the Chenab River at the Khanki Weir. By Lieutenant-Colonel J. Clibborn, I.S.C., C.A., L.C.E., C.I.E. Price per copy, 12*a.*

Indian Household Account Book for a period of two years, comprising Daily Table Expense Account, Bread, Butter and Milk Account, Dhobey's Account, Servants' Wages Account, etc. Price, Rs. 3 per copy.

Cash must accompany order. Articles are sent by V.-P. P. to persons in Government employment only.

Application is to be made to the Curator, Thomason College Book Depôt, Roorkee.

Half-yearly list of new books and periodicals for sale at the Library of the Asiatic Society of Bengal, 57 Park Street, Calcutta.

ASIATIC SOCIETY'S PUBLICATIONS.

Proceedings Nos. 9 to 11 of 1901 and No. 1 of 1902, at 8*a.*

Journal, Part I, No. 2 of 1901, at Rs. 2.

" Part II, No. 2 of 1901, at Rs. 2.

" Part III, No. 2 of 1901, and Part III, No. 1 of 1902, at Rs. 2.

BIBLIOTHECA INDICA.

Upamitibhavaprapancha Katha. Fasc. 4 at 6*a*.
Catapatha Brahmana. Vol. I, Fasc. 5, at 6*a*.
Varsakriya Kaumudi. Fasc. 3 and 4, at 6*a*.
Nityacarapaddhati. Fasc. 2 and 3, at 6*a*.
Apastamba Sranta Sutra. Vol. III, Fasc. 16, at 6*a*.
Mahabhasyaprodipodyata. Vol. II, Fasc. 2 and 3, at 6*a*
Al-Muquddasai. (English.) Vol. I, Fasc. 2, at 12*a*.

List of Books published by the Meteorological Department during the current quarter.

Monthly Weather Review of India for the month of February 1902. By John Eliot and Lala Hem Raj (illustrated by 5 plates) Quarto. Paper cover. Re. 1.
Indian Meteorological Memoirs, Volume XII, Part III. By John Eliot (illustrated by 68 plates). Quarto. Paper cover. Rs. 3.

List of books published by Meteorological Department from 1st January to 30th June, 1902.

Monthly Weather Review of India, from September, 1901, to January, 1902. By W. L. Dallas (illustrated by five plates). Quarto. Paper cover. Re. 1 per month.
Report of the Director, Government Observatory, Bombay, for the year ending 31st December, 1901. By N. A. F. Moos. Quarto. Paper cover.
Report on the Kodaikanal and Madras Observatories for the period 1st April to 31st December, 1901. By C. Michie Smith. Quarto. Paper cover.
Indian Meteorological Memoirs, Volume XII, Part II. By John Eliot. Quarto. Paper cover. Rs. 3.
Indian Meteorological Memoirs, Volume XIII. By John Eliot. Quarto. Paper cover Rs. 5.

The Indian Law Reports.

Published under Authority.

THE Indian Law Report published under the authority of the Governor-General in Council, appear in monthly parts, published as soon as possible after the first of each month at Calcutta, Madras, Bombay, and Allahabad, and comprise four series—one for the Calcutta High Court, a second for the Madras High Court, a third for the Bombay High Court, and a fourth for the Allahabad High Court. The cases heard by the Privy Council on appeal from each High Court are reported in the Series for that High Court. Cases heard by the Privy Council on appeal from Provinces in India not subject to any High Court are reported in the Calcutta Series.

The Calcutta Series is distributed by the Bengal Secretariat Book Depôt, and the Madras, Bombay, and Allahabad Series are distributed direct from Madras, Bombay, and Allahabad respectively.

In supersession of the previous advertisements, on and from the 1st January 1889 the terms of subscription and sale will be as follows for current issues as well as for back numbers of the reports from 1876:—

Terms of subscription payable annually in advance.

For the complete series, *including postage* (Inland rate) Rs. 22-8.

Ditto ditto (Overland rate) Rs. 28.

	Without postage.	With postage.
	Rs. A. P.	Rs. A. P.
For the Calcutta Series ...	10 0 0	12 8 0
,, each of the Madras, Bombay, and Allahabad Series	6 0 0	7 0 0
,, a part of the Calcutta Series purchased separately (*inclusive of postage in India*)	.....	2 0 0
,, a part of each of the Madras, Bombay, and Allahabad Series purchased separately (*inclusive of postage in India*)	.....	1 0 0

The following are the rates at which deductions will be made for parts out of print and at which duplicate copies will be supplied to subscribers when required in place of copies lost in transit, provided complaint of non-receipt is made to the Publisher within three months of the date of publication:—

	For town.	For mufassal.
	Rs. A. P.	Rs. A. P.
For the Calcutta Series, per copy ...	0 8 9	0 10 3
,, each of the Madras, Bombay, and Allahabad Series, per copy .	0 5 3	0 5 9
,, the Calcutta Series. For the year	7 2 6	8 6 9
,, each of the Madras, Bombay and Allahabad Series. For the year	4 4 6	4 11 3

Persons desiring to subscribe for or purchase the Report should apply to—

The Superintendent, Government Press, Madras.

,, Superintendent, Government Central Press, Bombay.

,, Curator of Government Books, North-Western Provinces and Oudh.

,, Officer in charge, Bengal Secretariat Book Depôt.

Orders and subscriptions for 1902 should be at once registered and remitted by money-order payable to the Treasurer, Bengal Secretariat, Calcutta.

ADVERTISEMENTS will be received for publication on the wrappers of the Indian Law Reports, Calcutta Series, at the following rates, payable in advance—

	One page.	Half page.	Quarter page.
	Rs.	Rs.	Rs.
For one issue ...	20	14	9
,, three issues ...	55	36	4
,, six ,, ...	100	68	45
,, nine ,, ...	145	96	64
,, twelve ,, ...	180	12	80

SEVERAL volumes of the BENGAL LAW REPORTS, from August 1868 to December 1875, and FULL BENCH RULINGS, Parts I and II, are available at the following rates:—

	Without postage.	With postage.
	Rs. A. P.	Rs. A. P.
Bengal Law Reports, for one year ...	20 0 0	2 8 0
Single copies, Rs. 2 per copy.		
Full Bench Rulings, Parts I and II ...	20 0 0	22 8 0

Obtainable at the Bengal Secretariat Book Depôt, Writers' Buildings, Calcutta.

Remittances to be forwarded to the Treasurer, Bengal Secretariat, Writers' Buildings, Calcutta.

The complete series of the INDIAN LAW REPORTS for the years 1876 to 1885, 1887, and 1890 to 1901 having now been reprinted, are available, and may be purchased for all the years, or any particular year, on application to the Officer in charge, Bengal Secretariat Book Depôt.

The wanting parts of the Reports for the remaining years are being reprinted, and complete Reports from the beginning to date will be available shortly. The subscription, Rs. 22-8 per annum, should be remitted in advance to the Treasurer, Bengal Secretariat.

NOTICE TO SUBSCRIBERS.

SUBSCRIBERS are hereby informed that, unless complaint of non-receipt of any number is made to the Publisher of the series within three months of the date of publication, the benefits of the subscription rates for copies cost in transit will not be allowed, and full rates will be charged. The price per copy of each of the four series at subscription rates and at full rates is shown below—

PER COPY.

Subscription rate.

	Town.	Mofussal.
	Rs. A. P.	Rs. A. P.
Calcutta Series	0 8 9	0 10 3
Each of the Madras, Bombay and Allahabad Series ...	0 5 3	0 5 9

Full rate.

	Town.	Mofussal.
	Rs. A. P.	Rs. A. P.
Calcutta Series ...	2 0 0	2 0 0
Each of the Madras, Bombay and Allahabad Series ...	1 0 0	1 0 0

Notice.

THE *CALCUTTA GAZETTE*.

The 1st March 1901.—From this date the subscription to, and postage for, the *Calcutta Gazette* will be at the following rates, payable in advance:—

PER ANNUM.	For Calcutta.	For the Mufussal, including postage.
	Rs. A.	Rs. A.
Entire *Gazette*	15 0	20 0
Parts I, IA and IB together ...	5 0	7 8
Part II	1 0	2 12
Parts III, IV and IVA together	4 0	6 0
,, V and VI together ..	2 0	3 0
Appendix (Marine Notifications)	1 0	2 12
Supplement	5 0	7 8
PER ISSUE.		
Entire *Gazette*	0 8	0 10
Supplement	0 4	0 5

N. B.—Separate Parts of each issue of the *Gazette*, and occasionally important Rules and Extracts, can be obtained from the Officer in charge, Bengal Secretariat Book Depôt, at the rate of one anna for every sixteen pages or a fraction thereof. Postage according to weight.

RATES FOR ADVERTISEMENTS in the *Calcutta Gazette*:—

Full page, per issue	Rs. 20
Half ,, ,, ,, ...	,, 10

Casual advertisements, 4 annas per line.

Annual Statement of the Sea-borne Trade and Navigation of the Bengal Presidency and of its Chief Port (Calcutta), and each of its Subordinate Ports Chittagong, Balasore, Cuttack, Pooree, and Narainguage), Volumes I and II. Price Rs. 20 for 1899-1900. Published at the Calcutta Custom House Previous years' volumes can also be obtained at the same price.

Parts I, II and III of a Descriptive Catalogue of the Sanskrit Manuscripts in the Library of the Calcutta Sanskrit College, prepared by Pandit Hrishikesa Sastri and Babu Siva Chandra Gui, M.A., B.L., of that College are offered to the public for sale. The Catalogue is to be completed in 23 parts, the price of each part being 12 annas a copy, exclusive of postage. Copies can be obtained, from the Principal of the Sanskrit College, Calcutta.

APPENDIX TO

The Calcutta Gazette.

WEDNESDAY, JULY 30, 1902.

NOTICES TO MARINERS.

GOVERNMENT OF BENGAL—MARINE DEPARTMENT.

NOTICE TO MARINERS—No. 219.

[First Publication.]

BAY OF BENGAL—BURMA COAST.

Caution—Exact position of the reported wreck.

WITH reference to Notice to Mariners No. 163, dated the 5th June last, issued by this office, a further telegraphic communication has been received from the Principal Port Officer, Burma, stating that a green buoy with pole and basket marked W has been laid S. 26° E. (true) distant 4 cables from the wreck in 18 fathoms at low water. The position of the wreck is Lat. 15° 27′ 45″ N., Long. 94° 45′ E. Mariners are accordingly warned.

E. J. BEAUMONT, COMDR., R.I.M.,
Port Officer of Calcutta.

Published for general information.

C. B. BAYLEY,
Asst. Secy., Marine Department.

CALCUTTA, *the 22nd July 1902.*

GOVERNMENT OF BENGAL—MARINE DEPARTMENT.

NOTICE TO MARINERS—No. 220.

[First Publication.]

BAY OF BENGAL—ANDAMAN ISLANDS.

North Brother—Shoal reported to the north-eastward.

THE British Admiralty has given notice (No. 389 of 1902) that the R.I.M.S. *Elphinstone* reports having passed over a shoal patch on 14th March 1902 in approximately lat 11° 1′ 15″ N., long. 92° 41′ E., with North Brother island bearing S. 40° W., distant 2¾ miles.

The shoal appeared to be in the shape of a crescent extending in a westerly and south-westerly direction. The least depth obtained was 5 fathoms, sand.

(*Variation 1° Easterly in 1902.*)

This Notice affects the following Admiralty Charts:—Andaman islands, No. 825; port Blair to Little Andaman island, No. 1398: Also, Bay of Bengal Pilot, 1901, page 303.

E. J. BEAUMONT, COMDR., R.I.M.,
Port Officer of Calcutta.

Published for general information.

C. B. BAYLEY,
Asst. Secy., Marine Department.

CALCUTTA, *the 26th July 1902.*

GOVERNMENT OF BENGAL—MARINE DEPARTMENT.

NOTICE TO MARINERS—No. 221.

[First Publication.]

EASTERN ARCHIPELAGO—SUMATRA, WEST COAST.

Stort reef—Its position—Marion reef—Its non-existence.

THE British Admiralty has given notice (No. 392 of 1902) that a recent survey shows the position of the Stort reef to be as follows:—

(*a*) Stort reef, on which there is a depth of 3½ fathoms, is about three-quarters of a mile long N. by E. and S. by W. Its south-eastern part is situated with Pulo Pie bearing N. 69° E., distant 6¼ miles, and Pulo Bando, N. 1° W, or about 3 cables south of the position shown on the Chart. The south-eastern side of the reef is steep-to.

Approximate position, lat. 0° 54½′ S., long. 99° 59½′ E.

(*b*) A sounding of 50 fathoms, no bottom, was obtained in the reported position of Marion reef under conditions so favourable that the discoloration of the water over Stort reef, distant 1¾ miles to the westward, could clearly be traced, no sign however of the Marion reef could be seen, and it is assumed that the vessel reporting it saw the Stort reef. This reef has therefore been expunged from the Chart.

Approximate position, lat. 0° 54′ S., long. 100° 1½′ E.

(*Variation Nil in 1902.*)

This Notice affects the following Admiralty Charts:—Acheh head to Tyinkok bay, No. 2760; Ujong Masang to Ujong Indrapura, No. 709: Also, China Sea Directory, vol. I, 1896, page 296.

E. J. BEAUMONT, COMDR., R.I.M.,
Port Officer of Calcutta.

Published for general information.

C. B. BAYLEY,
Asst. Secy., Marine Department.

CALCUTTA, *the 26th July 1902.*

GOVERNMENT OF BENGAL—MARINE DEPARTMENT.

NOTICE TO MARINERS—No. 222.

[First Publication.]

EASTERN ARCHIPELAGO—SUMATRA, WEST COAST.

Pulo Lakotta—Non-existence of coral patch to the eastward.

THE British Admiralty has given notice (No. 393 of 1902) that a sounding of 28 fathoms has been obtained by the Netherlands Government S.S. *Condor* in a position from which Pulo Lakotta bore S. 62° W., distant 7½ miles, and Pulo Panjang N. 11° E.; and that no trace was seen of the coral patch shown on Chart No. 2760 in that position. This danger has accordingly been expunged from the Admiralty Charts.

Approximate position on Chart No. 2760, lat. 1° 54½′ N., long. 98° 6′ E.

(*Variation 2° Easterly in 1902.*)

This Notice affects the following Admiralty Chart:—Acheh head to Tyinkok bay, 760: Also, China Sea Directory, vol. I, 1896, page 283.

E. J. BEAUMONT, COMDR., R.I.M.,
Port Officer of Calcutta

Published for general information.

C. B. BAYLEY,
Asst. Secy., Marine Department.

CALCUTTA, *the 26th July 1902.*

GOVERNMENT OF BENGAL—MARINE DEPARTMENT.

NOTICE TO MARINERS—No. 223.

[First Publication.]

AFRICA, NORTH-EAST—RED SEA, WESTERN SHORE.

South Massawa channel—Reef in approach.

THE British Admiralty has given notice (No. 395 of 1902) that information has been received from the Master of the British S.S. *Neghileh* that at 6-45 P.M. on 24th March 1902 his vessel, drawing 9 feet of water, in clear calm weather struck on a reef south-eastward of Mojeidi island in the eastern approach to South Massawa channel.

Approximate position by star observations taken at the time, lat. 15° 22½′ N., long. 41° 4′ E.

This Notice affects the following Admiralty Chart:—Red Sea, Nos. 2523, 3d: Also, Red Sea, &c., Pilot, 1900, page 208.

E. J. BEAUMONT, COMDR., R.I.M.,
Port Officer of Calcutta.

Published for general information.

C. B. BAYLEY,
Asst. Secy., Marine Department.

CALCUTTA, *the 26th July 1902.*

GOVERNMENT OF BENGAL—MARINE DEPARTMENT.

NOTICE TO MARINERS—No. 224.

[First Publication.]

AFRICA, NORTH-EAST—RED SEA, EASTERN SHORE.

Jidda—Wreck in inner anchorage.

THE British Admiralty has given notice (No. 399 of 1902) that information, dated 6th June 1902, has been received from the Board of Trade, that the wreck of the S.S. *Alexander III* lies sunk in the inner anchorage, Jidda. From it the white beacon on Abu Harit bears S. 67° W., distant 4$\frac{1}{10}$ cables, and the house on Bahri N. 66° W.

Approximate position, lat. 21° 28′ N., long. 39° 10½′ E.

(*Variation 3° Westerly in 1902.*)

This Notice affects the following Admiralty Chart:—Jidda, No. 2599: Also, Red Sea, &c., Pilot, 1900, pages 270, 275.

E. J. BEAUMONT, COMDR., R.I.M.,
Port Officer of Calcutta

Published for general information.

C. B. BAYLEY,
Asst. Secy., Marine Department

CALCUTTA, *the 26th July 1902.*

GOVERNMENT OF BENGAL—MARINE DEPARTMENT.

NOTICE TO MARINERS—No. 225.

[First Publication.]

NEW ZEALAND—NORTH ISLAND, EAST COAST.

Doubtless bay—Prohibited anchorage.

THE British Admiralty has given notice (No. 401 of 1902) that anchorage in the vicinity of the telegraph cable in Doubtless bay is prohibited.

The anchorage area within which the cable lies is contained between a line drawn from Coal bay to Knuckle point on the east, and an imaginary line drawn N. 45° W. from river Taipa entrance on the west.

Four small beacons will shortly be erected to mark the lines of direction which the cable takes to enable vessels to keep clear of it.

Approximate position, Coal bay, lat. 35° 1′ S., long. 173° 32′ E.

(*Variation 13° Easterly in 1902.*)

This Notice affects the following Admiralty Chart:—Hokianga to Tukukaka, No. 2525: Also, New Zealand Pilot, 1901, page 69.

E. J. BEAUMONT, COMDR., R.I.M,
Port Officer of Calcutta.

Published for general information.

C. B. BAYLEY,
Asst. Secy., Marine Department.

CALCUTTA, *the 26th July 1902.*

GOVERNMENT OF BENGAL—MARINE DEPARTMENT.

NOTICE TO MARINERS—No. 226.

[First Publication.]

CHINA, SOUTH-EAST COAST—Mirs bay.

Rock.

The British Admiralty has given notice (No. 407 of 1902) of the existence of a rock in Mirs bay, with a depth over it of 1½ fathoms at low water springs, situated with the eastern extremity of North Gau bearing N. 43° W., distant 3 cables, and south-eastern extremity of Grass island S. 41° W.

This rock is steep-to on the eastern side, the 10-fathom contour line extending a distance of one cable to the north-eastward, half a cable to the eastward, and 1½ cables to the south-eastward.

Approximate position, lat. 22° 29′ N., long. 114° 22¾′ E.

(*Variation 1° Easterly in 1902.*)

This Notice affects the following Admiralty Charts :—Macao to Pedro Bianco, No. 3026; Hong Kong to the Brothers, No. 1962; Mirs bay, No. 1964 : Also, China Sea Directory, vol. III, 1894, page 126; and Supplement, 1898, page 14.

E. J. Beaumont, Comdr., r.i.m.,
Port Officer of Calcutta.

Published for general information.

C. B. Bayley,
Asst. Secy., Marine Department.

Calcutta, *the 26th July 1902.*

GOVERNMENT OF BENGAL—MARINE DEPARTMENT

NOTICE TO MARINERS—No. 216.

[Second Publication.]

PACIFIC OCEAN (SOUTH)—Tuamotu or Low Archipelago.

Ernest Legouvé reef—Amended position.

With reference to Notice to Mariners No. 180, dated the 20th June 1902, issued by this Office, the British Admiralty has given further notice (No. 378 of 1902) that the original report of the Captain of the French vessel *Ernest Legouvé* states that he passed on December 17th, 1901, at 4 p.m., a reef about 100 yards long, in approximately lat. 35° 14′ S., long. 150° 38′ W., and not 152° 58′ W., as given by the authority for the above Notice. The second reef was also seen.

Note.—The longitude of 152° 58′ W. appears to have been given from the meridian of Paris.

This Notice affects the following Admiralty Charts :—Pacific oceans, Nos. 2683, 788, 783 : Also, Pacific islands, vol. III, 1900, page 27.

E. J. Beaumont, Comdr., r.i.m.,
Port Officer of Calcutta.

Published for general information.

C. B. Bayley,
Asst. Secy., Marine Department.

Calcutta, *the 19th July 1902.*

GOVERNMENT OF BENGAL—MARINE DEPARTMENT.

NOTICE TO MARINERS—No. 217.

[Second Publication.]

INDIA, WEST—Malabar coast.

Cochin and Narakal—Wreck disappeared—Buoys removed.

The British Admiralty has given notice (No. 380 of 1902) that the wreck shown on some copies of Admiralty Chart, No. 749, 12 cables N. 83° W. from Cochin lighthouse, has disappeared, and that the buoy marking it, and also the red anchoring buoy situated about 2¼ miles S. 73° W. from Narakal light, have been withdrawn.

Approximate position, Narakal light, lat. 10° 2¾′ N., long. 76° 12¾′ E.

(*Variation 1° Easterly in 1902.*)

This Notice affects the following Admiralty Chart :—Malabar coast, No. 749 : Also, West Coast of Hindustan Pilot, 1898, pages 129 and 131.

E. J. Beaumont, Comdr., r.i.m.,
Port Officer of Calcutta.

Published for general information.

C. B. Bayley,
Asst. Secy., Marine Department.

Calcutta, *the 19th July 1902.*

GOVERNMENT OF BENGAL—MARINE DEPARTMENT.

NOTICE TO MARINERS—No. 218.

[Second Publication.]

EASTERN ARCHIPELAGO—Makassar strait.

North Watcher—Light established.

With reference to Notice to Mariners No. 92, dated the 12th April 1902, issued by this Office, the British Admiralty has given further notice (No. 382 of 1902) that a 5th order *white flashing* light *every five seconds*, elevated 295 feet above high water, and said to be visible in clear weather from a distance of 23 miles, has been established on an iron framework tower, erected on the summit of North Watcher island, northern entrance to Makassar strait.

Approximate position on Chart No. 2636, lat. 0° 35′ N., long 119° 47′ E.

This Notice affects the following Admiralty Charts:—China sea, No. 2660b; Eastern archipelago, No 941a; strait of Makassar, No. 2536: Also, List of Lights, part VI, 1902, page 98; and Eastern archipelago, part II, 1893, page 336.

E. J. Beaumont, Comdr., r.i.m.,
Port Officer of Calcutta.

Published for general information.

C. B. Bayley,
Calcutta, *the 19th July 1902.* *Asst. Secy., Marine Department.*

GOVERNMENT OF BENGAL—MARINE DEPARTMENT.

NOTICE TO MARINERS—No. 202.

[Third Publication.]

INDIA, WEST—Bombay coast.

Rájpuri point—Whale reef buoy removed.

The Bombay Government has given notice (No. 73 of 1902) that the red buoy on the north side of the 'Whale Reef' off Rájpuri Point was removed for the south-west monsoon on the 30th ultimo.

E. J. Beaumont, Comdr., r.i.m.,
Port Officer of Calcutta.

Published for general information.

C. B. Bayley,
Calcutta, *the 7th July 1902.* *Asst. Secy., Marine Department.*

GOVERNMENT OF BENGAL—MARINE DEPARTMENT.

NOTICE TO MARINERS—No. 203.

[Third Publication.]

BAY OF BENGAL—Burma coast.

Rangoon river—Buoy placed to mark the Middle bank extension.

The Bombay Government has given notice (No. 75 of 1902) that information has been received from the Principal Port Officer, Rangoon, dated 11th June 1902, that a third class Can Buoy with Staff and St. George's Cross has been placed N. 53° E. (magnetic) distance 4·6 cables from 'Dark foliaged tree' on east side of the entrance to 'Deserters' Creek.

This tree has a pole with two balls on it.

E. J. Beaumont, Comdr., r.i.m.,
Port Officer of Calcutta.

Published for general information.

C. B. Bayley,
Calcutta, *the 7th July 1902.* *Asst. Secy., Marine Department.*

GOVERNMENT OF BENGAL—MARINE DEPARTMENT.

NOTICE TO MARINERS—No. 204.

[Third Publication.]

BAY OF BENGAL—BURMA COAST.

Rangoon river—Upper Hastings Channel buoy relaid.

THE Bombay Government has given notice (No. 76 of 1902) that information dated 14th June 1902 has been received from the Principal Port Officer, Rangoon, that the Upper Hastings Channel Buoy has been relaid 300 feet N. 36° W. (magnetic) of its former position in 6 feet reduced.

This Notice affects the following Admiralty Chart:—Rangoon River and Approaches, No. 833, and Bay of Bengal Pilot, 3rd edition, 1901, page 353.

E. J. BEAUMONT, COMDR., R.I.M.,
Port Officer of Calcutta.

Published for general information.

C. B. BAYLEY,
Asst. Secy., Marine Department.

CALCUTTA, *the 7th July 1902.*

GOVERNMENT OF BENGAL—MARINE DEPARTMENT.

NOTICE TO MARINERS—No. 205.

[Third Publication.]

INDIA, WEST—BOMBAY COAST.

Certain buoys removed for the S. W. monsoon.

THE Bombay Government has given notice (No. 77 of 1902) that the undermentioned buoys were removed from their positions on the dates noted against each:—

Alibág Buoy	16th May 1902.
Bánkot Buoy	18th „ „
Anjanvel Buoy	20th „ „
Ambulgad Reef Buoy (Jaitápur)	18th „ „
Chaldea Rock Buoy	16th „ „
Málvan outer Rock Buoy	19th „ „
Johnston Castle Buoy	20th „ „
Málvan Harbour Buoys	21st „ „
Vengurla Harbour Buoys	16th „ „
Kárwár Harbour Buoys	20th „ „
S.S. *Brahmani* Wreck Buoy	27th „ „

E. J. BEAUMONT, COMDR., R.I.M.,
Port Officer of Calcutta.

Published for general information.

C. B. BAYLEY,
Asst. Secy., Marine Department.

CALCUTTA, *the 7th July 1902.*

GOVERNMENT OF BENGAL—MARINE DEPARTMENT.

NOTICE TO MARINERS—No. 206.

[Third Publication.]

AUSTRALIA—CORAL SEA.

Bellona reefs—Reefs reported to the eastward.

THE British Admiralty has given notice (No. 363 of 1902) that the Master of the schooner *Waiwera* reports having seen to the eastward of the Bellona reefs a reef about 3½ miles long, enclosing a lagoon, the northern end of the reef being in about lat. 20° 32′ S., long. 159° 35′ E. On the reef was a sandy cay.

Also, another reef, on which was seen the wreck of a wooden vessel, in about lat. 21° 25′ S., long. 159° 27′ E.

This Notice affects the following Admiralty Charts:—Pacific ocean, No. 780; Coral sea, No. 2763: Also, Australia Directory, vol. II, 1898, page 532.

E. J. BEAUMONT, COMDR., R.I.M.,
Port Officer of Calcutta.

Published for general information.

C. B. BAYLEY,
Asst. Secy., Marine Department.

CALCUTTA, *the 12th July 1902.*

GOVERNMENT OF BENGAL—MARINE DEPARTMENT.

NOTICE TO MARINERS—No. 207.

[Third Publication.]

EASTERN ARCHIPELAGO—JAVA, EAST COAST.

Banjuwangi—Light established—Prohibited anchorage.

THE British Admiralty has given notice (No. 365 of 1902) that a *red fixed* light, visible from a distance of 3 miles, has been established upon an iron framework support 19 feet high, painted white, erected at a distance of about 1½ cables S. 74° E. from the lighthouse at Banjuwangi.

This light, in line with the principal light N. 74° W., marks the southern limit of the anchorage, and vessels are prohibited from anchoring to the southward of it on account of the telegraph cables.

Approximate position, lat. 8° 13′ S., long. 114° 23′ E.

(*Variation 1° Easterly in 1902.*)

This Notice affects the following Admiralty Charts:—Surabaya strait, No. 934; plan of Banjuwangi on Chart No. 932: Also, List of Lights, part VI, 1902, page 94; Eastern Archipelago, part II, 1893, page 167; and Supplement, 1899, page 21.

E. J. BEAUMONT, COMDR., R.I.M.,
Port Officer of Calcutta.

Published for general information.

C. B. BAYLEY,
Asst. Secy., Marine Department.

CALCUTTA, *the 12th July 1902.*

GOVERNMENT OF BENGAL—MARINE DEPARTMENT.

NOTICE TO MARINERS—No. 208.

[Third Publication.]

EASTERN ARCHIPELAGO—SUMATRA, SOUTH-WEST COAST.

Maki bay—Reef reported.

THE British Admiralty has given notice (No. 366 of 1902) that a reef with a depth of 3½ fathoms over it is reported to exist in the approach to Maki bay, situated with Batu Tonkah point bearing N. 7° W., distant 5 cables, and pulo Sukodono S. 52° E.

Approximate position, lat. 3° 24¼′ N., long. 97° 3½′ E.

Depths of from 7 to 8 fathoms surround this reef.

(*Variation 1° Easterly in 1902.*)

This Notice affects the following Admiralty Chart:—Acheh head to Tyingkok bay, No. 2760: Also, China Sea Directory, vol. I, 1896, page 273.

E. J. BEAUMONT, COMDR., R.I.M.,
Port Officer of Calcutta.

Published for general information.

C. B. BAYLEY,
Asst. Secy., Marine Department.

CALCUTTA, *the 12th July 1902.*

GOVERNMENT OF BENGAL—MARINE DEPARTMENT.

NOTICE TO MARINERS—No. 209.

[Third Publication.]

CHINA, SOUTH-EAST COAST—MIRS BAY.

Long harbour—Shoals.

THE British Admiralty has given notice (No. 368 of 1902) of the existence of the undermentioned shoals in Long Harbour, Mirs bay:—

1. A shoal composed of stones and sand, with a depth of 12 feet over it at low water springs, extending for a distance of 1¾ cables from the western side of Grass island; the western extremity of this shoal is steep to and situated with the western extremity of Grass island bearing N. 2° W., distance 3 cables, and Sam mau shak N. 79° W.
2. A rock, circular in shape and 75 yards in diameter, with a depth of 4½ fathoms over it at low water springs, situated with the western extremity of Grass island bearing N. 33° E., distant 6$\frac{1}{10}$ cables, and Sam mau shak N. 31° W.
   This rock is steep to.

3. A rock, with a depth of 4 feet over it at low water springs, situated with the western extremity of Grass island bearing N. 13° W., distant 7 cables, and Sam mau shak N. 56° W.
   This rock is steep to on its northern side, the 5-fathom contour line extends 45 yards to the westward of it.
4. A rock, circular in shape and 35 yards in diameter, with a depth of 4½ fathoms over it at low water springs, situated with western extremity of Grass island bearing N. 3° W., distant 8½ cables, and Sam mau shak N. 41° W.
   This rock is steep to.

Approximate position, western extremity of Grass island, lat. 22° 29′ N., long. 114° 21′ E.

(*Variation 1° Easterly in 1902.*)

This Notice affects the following Admiralty Charts:—Macao to Pedro Blanco, No. 3026; Mirs bay, No. 1964: Also, China Sea Directory, vol. III, 1894, page 126; and Supplement, 1898, page 14.

E. J. BEAUMONT, COMDR., R.I.M.,
Port Officer of Calcutta.

Published for general information.

C. B. BAYLEY,
Asst. Secy., Marine Department.

CALCUTTA, *the 12th July 1902.*

GOVERNMENT OF BENGAL—MARINE DEPARTMENT.

NOTICE TO MARINERS—No. 210.

[Third Publication.]

NEW ZEALAND—NORTH ISLAND, EAST COAST.

Firth of Thames, Middle bank—Its non-existence.

THE British Admiralty has given notice (No. 370 of 1902) that a very careful but unsuccessful search has been made for Fishing or Middle bank, Firth of Thames, and that depths of 14 fathoms and upwards were found everywhere near the reported position; this shoal, on which there was supposed to be a depth of 3 fathoms, has therefore been expunged from the Charts.

Approximate position, lat. 36° 54¾′ S., long. 175° 21′ E.

This Notice affects the following Admiralty Chart:—Tutukaka harbour to Mayor island No 2543: Also, New Zealand Pilot, 1901, page 112.

E. J. BEAUMONT, COMDR., R.I.M.,
Port Officer of Calcutta.

Published for general information.

C. B. BAYLEY,
Asst. Secy., Marine Department.

CALCUTTA, *the 12th July 1902.*

GOVERNMENT OF BENGAL—MARINE DEPARTMENT.

NOTICE TO MARINERS—No. 211.

[Third Publication.]

PACIFIC OCEAN—LUZON, WEST COAST.

Lingayen gulf—Shoal reported.

THE British Admiralty has given notice (No. 371 of 1902) of the existence of a coral reef about one-third of a mile long, and with a depth of 2½ fathoms over it in the entrance to Lingayen gulf, situated with San Fernando point lighthouse bearing N. 1° W., distant 2½ miles.

Approximate position, lat. 16° 35½′ N., long. 120° 17′ E.

(*Variation Nil in 1902.*)

This Notice affects the following Admiralty Chart:—The island of Luzon, No. 2454: Also, Eastern Archipelago, part I, 1890, page 43; Revised Supplement, 1898, relating to that work, page 4; China Sea Directory, vol. II, 1899, page 323; and Supplement, 1901, page 18.

E. J. BEAUMONT, COMDR., R.I.M.,
Port Officer of Calcutta.

Published for general information.

C. B. BAYLEY,
Asst. Secy., Marine Department.

CALCUTTA, *the 12th July 1902.*

GOVERNMENT OF BENGAL—MARINE DEPARTMENT.

NOTICE TO MARINERS—No. 212.

[Third Publication.]

NEW ZEALAND—NORTH ISLAND, EAST COAST.

Hauraki gulf—Rock on the westward of Rakino island.

THE British Admiralty has given notice (No. 372 of 1902) of the existence of a rock, with a depth of 4 feet over it at low water springs, situated with the summit (195 feet) of Rakino island bearing S. 74° E., distant 8¼ cables, and the western extremity of Tapu island S. 26° W.

Approximate position on Chart No. 1896, lat. 36° 43′ S., long. 174° 55¼′ E.

(*Variation 14° Easterly in 1902.*)

This Notice affects the following Admiralty Charts:—Tutukaka harbour to Mayor island, No. 2543; Entrance to Auckland harbour, No. 1896: Also, New Zealand Pilot, 1901, page 49.

E. J. BEAUMONT, COMDR., R.I.M.,
Port Officer of Calcutta.

Published for general information.

C. B. BAYLEY,
CALCUTTA, *the 12th July 1902.* *Asst. Secy., Marine Department.*

GOVERNMENT OF BENGAL—MARINE DEPARTMENT.

NOTICE TO MARINERS—No. 213.

[Third Publication.]

AUSTRALIA—TORRES STRAITS, INNER ROUTE.

Tih Tih reef—Beacon re-erected.

THE Portmaster, Brisbane, has given notice (No. 4 of 1902) that the Beacon on Tih Tih Reef reported to be down has now been re-erected.

Chart affected—No. 2921; Australia Directory, vol. 2.

E. J. BEAUMONT, COMDR., R.I.M.,
Port Officer of Calcutta.

Published for general information.

C. B. BAYLEY,
CALCUTTA, *the 12th July 1902.* *Asst. Secy., Marine Department.*

GOVERNMENT OF BENGAL—MARINE DEPARTMENT.

NOTICE TO MARINERS—No. 214.

[Third Publication.]

AUSTRALIA—FITZROY RIVER.

Upper Flats lightship—Discontinuance of tide signals.

THE Acting Portmaster, Brisbane, has given notice (No. 5 of 1902) that the improvements in this portion of the Fitzroy River having rendered tide signals no longer necessary, notice is hereby given that on and after 30th June they will not be exhibited from the Lightship.

Chart affected—No. 363: Australia Directory, vol. 2.

E. J. BEAUMONT, COMDR., R.I.M.,
Port Officer of Calcutta.

Published for general information.

C. B. BAYLEY,
CALCUTTA, *the 12th July 1902.* *Asst. Secy., Marine Department.*

GOVERNMENT OF BENGAL—MARINE DEPARTMENT.

NOTICE TO MARINERS—No. 215.

[Third Publication.]

AUSTRALIA—Inskip point.

Discontinuance of Pilot service.

The Portmaster, Brisbane, has given notice (No. 6 of 1902) that, on and after the 30th instant, the Pilot Service at Inskip Point will be discontinued.

Vessels leaving Brisbane, and requiring the services of a Pilot through Sandy Straits, are requested to give notice to the Marine Department at least twenty-four hours before departure.

Vessels from the North are requested to give similar notice to the Harbour Office, Rockhampton or Townsville.

Chart affected—No. 1068; Australia Directory, vol. 2.

E. J. Beaumont, Comdr., R.I.M.,
Port Officer of Calcutta.

Published for general information.

C. B. Bayley,
Asst. Secy., Marine Department.

Calcutta, *the 12th July 1902.*

REGISTERED No., C 209.]

No. 31 of 1902.

SUPPLEMENT TO
The Calcutta Gazette.

WEDNESDAY, JULY 30, 1902.

OFFICIAL PAPERS.

[Non-Subscribers to the GAZETTE *may receive the* SUPPLEMENT *separately on payment of five rupees per annum if delivered in Calcutta, or seven rupees and eight annas if sent by post.]*

CONTENTS.

	Page
DECLARATION of State Holidays	1081
Report under section 41 of Bengal Act I of 1893 on the warehouses in Calcutta for the year 1901-1902	1083
Resolution on the Annual Report on the Police Administration of the Town of Calcutta and its Suburbs for the year 1901	1093
Weather and Crop Report for the week ending the 28th July 1902	1096
Statement showing the quantities of the Principal Staples of Traffic imported into and exported from Calcutta from the interior in the months of April and May 1902	1100
Vital Statistics of Districts and Towns in Bengal for the month of May 1902	1107
STATEMENT showing heights over mean sea-level and low water in the rivers Ganges, Bhagirathi, Jalangi and Brahmaputra for the month of June 1902	1109
Circular and Eastern Canal for the week ending Saturday the 26th July 1902	1110
Results of the Meteorological Observations taken at the Alipore Observatory from 20th to 26th July 1902 ...	1111
East Indian Railway during the four weeks ending 26th April 1902	1112
Bengal-Nagpur Railway during the month of May 1902	1114
Weekly Return of Traffic Receipts on Indian Railways ...	1116

DECLARATION OF STATE HOLIDAYS.

FINANCIAL DEPARTMENT—MISCELLANEOUS.

Calcutta, the 28th July 1902.

RESOLUTION—No. 3439Mis.

READ—

The Resolution of this Government, No. 1624T.—F., dated 31st October 1901, on the subject of the holidays given in Government offices and the practice regarding their enjoyment by clerks and other servants of Government.

Read also—

A letter from the Government of India in the Home Department, No. 1799, dated 12th June 1902.

IN paragraph 4 of the Resolution above cited, it was remarked that, under the orders of the Government of India, the State holidays declared by the Local Government by notification under section 25 of the Negotiable Instruments Act to be public holidays would be in future ordinarily confined to the 24th May, the birthday of Her late Majesty, and the 9th November, the birthday of His Majesty the King-Emperor, and that these days would be declared by notification in the *Calcutta Gazette* to be public holidays.

2. In their letter of the 12th June 1902, the Government of India direct, in modification of these orders, that in future years a State holiday shall be notified under the Negotiable Instruments Act on May 30th or such other date as may be appointed for the celebration of the King's birthday in India, and that no holiday shall be declared on May 24th or November 9th in future.

ORDER.—Ordered that a copy of these orders be forwarded to all Heads of Departments, Commissioners and District Magistrates (through Commissioners), and to the several Departments of the Secretariat for information and guidance.

Ordered, also, that the Resolution be published in the *Calcutta Gazette*.

By order of the Lieutenant-Governor of Bengal,

E. W. COLLIN,

Offg. Secretary to the Govt. of Bengal.

REPORT UNDER SECTION 41 OF BENGAL ACT I OF 1893 ON THE WAREHOUSES IN CALCUTTA FOR THE YEAR 1901-1902.

NOTIFICATION—No. 1831M.

The 22nd July 1902.—The following report is published for general information.

E. W. COLLIN,
Offg. Secy. to the Govt. of Bengal.

No. 7090M., dated Calcutta, the 23rd June 1902.

From—The HON'BLE MR. R. T. GREER, I.C.S., Chairman of the Corporation of Calcutta,

To—The Secretary to the Government of Bengal, Municipal Department.

I HAVE the honour to submit the following report under section 41 of Act I of 1893 (B.C.) of warehouses in Calcutta for the year 1901-1902.

2. The fees under section 10 of the aforesaid Act continued to be levied at $7\frac{1}{2}$ per cent. on the annual valuation of warehouses.

3. The following statement gives the results of applications for licenses:—

Applications						
Pending since last year.	Received during the year.	Total.	Nature of application.	Number sanctioned.	Number refused.	Number pending.
2	1	3	Jute	1	1	1*
6	57	63	Wood, &c.	60	2	1
8	58	66	...	61	3	2

* Pending opinion of the Commissioner of Police.

4. Eight licenses issued for 1900-1901 and 569 for 1901-1902. The following is a statement of the aggregate amount of receipt:—

		Rs.	A.
License fees for 1900-1901	... ...	402	8
Ditto 1901-1902	... ...	22,653	0
Mutation fees and fines, &c.	... ...	189	2
	Total ...	23,244	10

5. Of 597 licenses for warehouses in 1900-1901, 539 were renewed and 17 were cancelled as vacant or unoccupied or not assessable under the Act, while the license fees of 41 remained unrealised at the close of the year.

6. The following statement shows the receipts and disbursements of the warehouse fund during the year 1901-1902:—

Receipts.	Amount.	Total.	Disbursements.	Amount.	Total.
	Rs. A. P.	Rs. A. P.		Rs. A. P.	Rs. A. P.
To Jute warehouse license fees ...	23,055 8 0		By contribution to the Fire Brigade	30,557 8 0	
Miscellaneous receipts and fines ...	189 2 0				30,557 8 0
		23,244 10 0	Balance at the close of the year—		
Balance at the commencement of the year	16,866 8 9		Cash in the Bank of Bengal ...	9,553 10 9	
		16,866 8 9			9,553 10 9
Total ...	.....	40,111 2 9	Total ...	.....	40,111 2 9

7. Appended is a list of warehouses licensed in 1901-1902.

List of Warehouses other than Jute licensed in 1901-1902.

Ward No.	Serial No.	Locality of Warehouses.	Name of License-holder.	Description of Warehouses.	Annual license-fee. Rs. A. P.
1	1	1-H-1, Bagh Bazar Street ...	Halodhur Mondul ...	Wood ...	12 0 0
„	2	161-H-81, Upper Chitpur Road	Shaik Matiullah	Fire-wood ...	4 8 0
„	3	161-H-18, ditto ...	„ Sobiruddy	Ditto ...	7 0 0
„	4	177-H-1, ditto ...	Botokristo Bose	Wood ...	7 0 0
„	5	199-1, ditto ...	Khorodamoye Dassee ...	Hay and straw	14 8 0
„	6	199-1, ditto ...	Harinarain Mullick ...	Ditto	34 8 0
„	7	199-1-1, ditto ...	Bidhubhusan Dutt ...	Ditto	17 0 0
„	8	199-1-1, ditto ...	Thacoram Das	Ditto	21 8 0
„	9	199-1-2, ditto ...	Kedar Nath Roy	Ditto	29 8 0
„	10	199-1-2, ditto ...	Fokeer Das Hazrah ...	Ditto	20 8 0
„	11	199-6-H-2, ditto ...	Kheroda Chura Samonto ...	Ditto	19 8 0
„	12	199-6-H-3, ditto ...	Issur Chunder Hazrah ...	Ditto	37 0 0
„	13	199-6-H, ditto ...	Bama Churn Das & another	Ditto	18 0 0
„	14	82-2-H-1, Cornwallis Street ...	Abinash Chunder Ghose ...	Wood ...	13 0 0
„	15	82-2-H-3, ditto ...	Ditto ...	Timber ...	12 0 0
„	16	83, ditto ...	Soshi Bhusan Sircar ...	Teak-wood ...	4 8 0
„	17	96, ditto ...	Ram Chunder Mahinder ...	Ditto ...	3 8 0
„	18	111, ditto ...	Atulanand Bhuttacharjee ...	Ditto ...	6 0 0
„	19	129, ditto ...	Romanath Nandy	Wood ...	7 0 0
„	20	137-H-5, ditto ...	Rambromho Dey	Timber ...	9 8 0
„	21	138-H-2, ditto ...	Hury Das Mondol	Do. ...	7 8 0
„	22	41, Canal West Road ...	G. C. Bose Juggobundhu Sen ...	Wood ...	8 8 0
„	23	46, ditto ...	Alikjaun Mondol	Fire-wood ...	6 0 0
„	24	46, ditto ...	Ditto	Ditto ...	6 8 0
„	25	48, ditto ...	Shaik Foyem	Ditto ...	4 8 0
„	26	43-2-1, ditto ...	Dwarka Nath Moohoory ...	Ditto ...	14 8 0
„	27	43-3, ditto ...	Panchcouree Biswas ...	Ditto ...	15 0 0
„	28	43-2-1, ditto ...	Mohiney Dassee ...	Ditto ...	6 0 0
„	29	37-H-3, ditto ...	Mohindro Nath Mukerjee ...	Ditto ...	2 8 0
„	30	19, Gailiffe Street ...	Ashutosh Newgee... ...	Timber ...	1 0 0
„	31	22-5, ditto ...	Bolyeprosaud Bose ...	Fire-wood ...	6 0 0
„	32	22-H-2-1, ditto ...	Kshetter Nath Mitter ...	Ditto ...	9 0 0
„	33	22-2, ditto ...	Romanath Sircar ...	Wood, &c. ...	13 8 0
„	34	22-H-3, ditto ...	Ditto	Fire-wood ...	9 0 0
„	35	22-H-4, ditto ...	Kedar Nath Ghose ...	Ditto ...	6 0 0
„	36	23, ditto ...	Khanto Bewah ...	Ditto ...	4 8 0
„	37	114, Grey Street ...	Shaik Omeeruddy ...	Ditto ...	4 8 0
2	38	161, Aheereetola Street ...	Kalipodo Mitter ...	Wood ...	6 0 0
„	39	1-H-91, Bonomally Sircar's Street. ...	Shaik Omeeruddy ...	Do. ...	7 8 0
„	40	2-H-2, ditto ...	„ Lallchand ...	Do. ...	6 0 0
„	41	37, ditto ...	„ Warshally ...	Fire-wood ...	3 8 0
„	42	243-H-14, Upper Chitpur Road. ...	Sitanath Mukerjee ...	Wood ...	10 8 0
„	43	243-H-20, ditto ...	Mutty Lal Roy ...	Do. ...	18 0 0
„	44	335, ditto ...	Shaik Bosadally ...	Fire-wood ...	5 0 0
„	45	224, ditto ...	Gonesh Chandra Boduck ...	Hay ...	6 8 0
„	46	243, ditto ...	Nilmoney Das ...	Wood ...	7 0 0
„	47	213, ditto ...	Baneymadhub Mukerjee ...	Teak-wood ...	7 8 0
„	48	33, Kasi Mitter's Ghat Street ...	Dwarka Nath Sircar & another. ...	Fire-wood ...	7 0 0
„	49	33, Sova Bazar Street ...	Fool Chand ...	Ditto ...	9 0 0
„	50	58, ditto ...	Shaik Dilloo ...	Ditto ...	9 0 0
„	51	67-10, Strand Road ...	Nursing Das Sujarmull ...	Teak-wood ...	30 0 0
„	52	67-10, ditto ...	Goneshara Das & Co. ...	Timber ...	58 8 0
3	53	3-H-2, Brindaban Bose's Lane...	Ramanath Nandy ...	Do. ...	12 0 0
„	54	139, Upper Chitpur Road ...	Shaik Aseeruddy ...	Fire-wood ...	10 8 0
„	55	140-H-1, ditto ...	„ Bosiruddy ...	Ditto ...	8 0 0
„	56	140-H-1, ditto ...	„ Abbas ...	Ditto ...	8 0 0
„	57	73, Cornwallis Street ...	Rambromho Dey ...	Timber ...	11 0 0
„	58	74, ditto ...	Bonomally Shaw ...	Teak-wood ...	8 8 0
„	59	79-3-1, ditto ...	Ashutosh Banerjee & Co. ...	Wood ...	5 0 0
„	60	79-H-3-2, ditto ...	Sitanath Ghose ...	Teak-wood ...	18 0 0
„	61	148, ditto ...	Ram Chandra Mahinder ...	Ditto ...	11 0 0
„	62	20-H-1, Canal West Road ...	Jodu Nath Chackerbutty & others. ...	Fire-wood ...	6 0 0
„	63	20, dtito ...	Janky Das ...	Ditto ...	3 8 0
„	64	21-1, ditto ...	Hajee Nymuddy Mollah ...	Fire-wood ...	4 8 0
„	65	163-H-9, Musjeedbaree Street	Shaik Jakoo ...	Ditto ...	7 0 0
„	66	86, Ultadinghee Road ...	Moocheeram Ghose ...	Wood ...	7 0 0
4	67	16, Canal West Road ...	Nibarun Chandra Dey ...	Fire-wood ...	5 0 0
„	68	17-H-1, ditto ...	Anisuddy Mullick & others ...	Ditto ...	21 0 0
„	69	17-H-3, ditto ...	Budruddin Sirdar ...	Ditto ...	7 0 0
„	70	17-H-6, ditto ...	Shaik Nundo ...	Ditto ...	9 8 0
„	71	17-17, ditto ...	Dabendro Nath Kur ...	Ditto ...	6 0 0
„	72	17-H-35, ditto ...	Kalikomul Bhuttacharjee ...	Ditto ...	6 0 0
„	73	17-H-36, ditto ...	Serajuddy Mirdya ...	Ditto ...	5 8 0

Ward No.	Serial No.	Locality of Warehouses.	Name of License-holder.	Description of Warehouses.	Annual license-fee. Rs. A. P.
4	74	17-H 49, Canal west Road ...	Girish Chander Haldar ...	Fire-wood ...	10 0 0
,,	75	18-H-2, ditto ...	Ram Chunder Das ...	Ditto ...	6 0 0
,,	76	18-H-4, ditto ...	Kristo Chunder Das ...	Ditto ...	9 0 0
,,	77	19-4, ditto ...	Abinash Chander Sen ...	Ditto ...	9 0 0
,,	78	19-H-3, ditto ...	Bhupendra Nath Raha ...	Ditto ...	9 0 0
,,	79	19-H-2, ditto ...	Rai Churn Dey ...	Ditto ...	5 0 0
,,	80	19, ditto ...	Rai Churn Ghose & others ...	Ditto ...	6 8 0
,,	81	19-H-3, ditto ...	Hossany Sickdar ...	Ditto ...	7 0 0
,,	82	19-4, ditto ...	Arman Bibee ...	Ditto ...	5 0 0
,,	83	19-4, ditto ...	Sitanath Raha ...	Ditto ...	4 8 0
,,	84	19-H-9, ditto ...	Troylookho Nath Mitter & others. ...	Ditto ...	6 0 0
,,	85	19-H-8, ditto ...	Ramdoyal Shome ...	Ditto ...	5 8 0
,,	86	19-1, ditto ...	Kunjobehary Sen & another ...	Ditto ...	5 8 0
,,	87	19-H-41, ditto ...	Sitanath Raha ...	Ditto ...	4 8 0
,,	88	18, ditto ...	Poorna Chunder Raha ...	Ditto ...	9 0 0
,,	89	18, ditto ..	Situl Chunder Das & another ...	Ditto ...	4 8 0
,,	90	15-H-8, ditto ...	Poresh Nath Bose ...	Ditto ...	9 8 0
,,	91	19-H-19, ditto ...	Hazaree Churn Sircar ...	Ditto ...	4 8 0
,,	92	19-H-30, ditto ...	Jungly ...	Ditto ...	5 0 0
,,	93	15-16, Cornwallis Street ...	Poorna Chander Dey & Co. ...	Timber ...	11 0 0
,,	94	3-H-3, Gas Street ...	Mofizuddy Mullick ...	Fire-wood ...	4 8 0
,,	95	4, ditto ...	Gangaram Maity ...	Ditto ...	2 8 0
,,	96	5, ditto	Shaik Akbar	Ditto ...	2 8 0
,,	97	5-3 H-1, ditto	,, Khodabax	Ditto ...	8 0 0
,,	98	6-H 2, ditto	,, Somiruddin Sircar ...	Ditto ...	8 0 0
,,	99	6-H-2, ditto	,, Khursid Fokir Mohomed	Ditto ...	3 8 0
,,	100	3, ditto	,, Mosahib	Ditto ...	6 0 0
,,	101	3-H-89, ditto	,, Azahurally	Ditto ...	3 8 0
,,	102	114-H-1, Manicktola Street ...	Gogun Chunder Nayeck ...	Ditto ...	9 0 0
,,	103	13-H-20, Manicktola Road ...	Durga Churn Dey ...	Ditto ...	9 0 0
,,	104	258-16, Upper Circular Road ...	Kinkur Chunder Pal ...	Timber ...	11 0 0
,,	105	121-H-9, ditto ...	Bhola Nath Mukerjee ...	Straw, &c. ...	4 8 0
5	106	31-1, Burtola Street ...	Shamsuddy Mullick ...	Fire-wood ...	8 0 0
,,	107	3-7, Upper Chitpur Road ...	Khudu Tanti	Ditto ...	3 8 0
,,	108	357, ditto ...	Ramsaran Tanti	Ditto ...	4 8 0
,,	109	22, Durpo Narain Tagore Street	Adam Khan	Ditto ...	8 0 0
,,	110	15, Durmahatta Street ...	Doliruddy Khan	Ditto ...	7 0 0
,,	111	22, ditto ...	Kerim Mullick	Ditto ...	7 0 0
,,	112	38, ditto ...	Shaik Ahmedally	Ditto ...	4 8 0
,,	113	62 & 63-H-1, ditto ...	Heralal Sircar & Co. ...	Wood ...	34 0 0
,,	114	64-H-1, ditto ...	Rammohon Shaw, carrying on business as Hurry Nath Shaw.	Do. ...	21 8 0
,,	115	64-H-1-1, ditto ...	Poorna Chunder Cowar & others.	Do. ...	40 0 0
,,	116	64 H-4, ditto ...	The Oriental Trading Co., Ld.	Do. ...	18 0 0
,,	117	65-H-3, ditto ...	Heralal Sircar	Do. ...	8 0 0
,,	118	65-H-4, ditto ...	Koylas Chunder Biswas ...	Do. ...	4 8 0
,,	119	65 1-H-5-1, ditto ...	Radha Churn Paul ...	Do. ...	7 0 0
,,	120	65-1-D, ditto ...	Ramdas and Ramkanye Dey ...	Do. ...	6 0 0
,,	121	65 1-H 7, ditto ...	Ram Chunder Chatterjee & others.	Do. ...	14 8 0
,,	122	65 1-H-8, ditto ...	Ditto ditto ...	Do. ...	9 8 0
,,	123	65-1-H-10, ditto ...	Nerodmohun Roy ...	Do. ...	15 0 0
,,	124	65-1-H-11, ditto ...	Ditto ...	Do. ...	11 8 0
,,	125	65-1-H-12, ditto ...	Gopal Chunder Sickdar ...	Do. ...	15 0 0
,,	126	65-1-H-13, ditto ...	Ditto ...	Do. ...	15 0 0
,,	127	65-1-H-14, ditto ..	Hiralal Sircar	Do. ...	19 0 0
,,	128	65-1-H-15, ditto ...	Ramgopal Sickder *alias* Gopal Chunder Sickdar.	Do. ...	10 8 0
,,	129	65-1-H-16, ditto ...	Radha Churn Paul ...	Do. ...	8 8 0
,,	130	65-1 H-17, ditto ...	Noni Gopal Bose	Do. ...	9 0 0
,,	131	65 1-H-18, ditto ...	Ram Chunder Chatterjee & others.	Do. ...	7 0 0
,,	132	65-1 H-19, ditto ...	Shama Churn Sercale ...	Do. ...	8 8 0
,,	133	65-1-H-20, ditto ...	Ramdas and Ramkanye Dey	Do. ...	21 0 0
,,	134	65-1 H-21, ditto ...	Koylas Chunder Biswas ...	Do. ...	6 8 0
,,	135	65 1 H-22, ditto ...	Kali Churn Shaw & others ...	Do. ...	10 0 0
,,	136	65-1-H-23, ditto ...	Dinobundhu Shaw & Brothers carrying on business as Kala Chand Shaw.	Do. ...	10 0 0
,,	137	65-1-H-3 1, ditto ...	Ditto ditto	Do. ...	8 0 0
,,	138	65 1-E, ditto ...	G. C. Bose and Ram Chunder Chunder.	Do. ...	4 8 0
,,	139	65 1-H 32, ditto ...	Russick Lal Nundy ...	Do. ...	3 8 0
,,	140	65 1-H-27, ditto ...	Radha Churn Paul ...	Do. ...	7 8 0
,,	141	65 1-H-27-1, ditto ...	Kali Churn Shaw and Hurynath Shaw.	Do. ...	5 0 0
,,	142	65-1-H-33, ditto ...	G. C. Bose Aviram Sett ...	Do. ...	7 8 0

Ward No.	Serial No	Locality of Warehouses.	Name of License-holder.	Description of Warehouses.	Annual license-fee. Rs. A P.
5	143	64-H-1-2, Durmahatta Street ...	Kala Chand Shaw & others ...	Wood ...	27 8 0
„	144	65-1-H-27-3, ditto ...	Russick Lal Nandy ...	Do. ...	6 0 0
„	145	65 1-H-27-4, ditto ...	Hury Nath Shaw ...	Do. ...	7 0 0
„	146	65-1-H-28, ditto ...	G. C. Bose & Ram Chunder Chunder.	Do. ...	14 8 0
„	147	65-1-H-29-1, ditto ...	Ram Chunder Chatterjee & others.	Do. ...	5 0 0
„	148	65-1-H-29, ditto ...	Gopal Chunder Sickdar & Akhoy Coomar Seocaji.	Do. ...	13 8 0
„	149	65-1-H 30, ditto ...	G. C. Bose Aviram Sett ...	Do. ...	16 0 0
„	150	65-1-H-32, ditto ...	Kesub Lal Dutt	Do. ...	9 0 0
„	151	65-1-H-32, ditto ...	G. C. Bose Hurish Chunder Mitter.	Do. ...	15 0 0
„	152	65-1-H-33, ditto ...	G. C. Bose Rai Churn Biswas	Do. ...	9 8 0
„	153	65-1-H-34, ditto ...	Ditto ditto	Do. ...	18 0 0
„	154	65-1-H-35, ditto ...	Bhutnath Thacoordas Bera ...	Do. ...	10 8 0
„	155	65 1-H-46, ditto ...	G. C. Bose Raichurn Biswas ...	Do. ...	13 0 0
„	156	67-H 1, ditto ...	Hury Nath Shaw & another ...	Do. ...	27 8 0
„	157	68-H-1, ditto ...	Ditto ditto	Do. ...	17 8 0
„	158	69-H-2, ditto ...	G. C. Bose Kunjobehary Bose ...	Do. ...	18 0 0
„	159	69, ditto ...	Grish Chunder Bose ...	Do. ..	48 0 0
„	160	182-H-2 & 88-H-1, Durmahatta Street.	Grish Chunder Bose & others ...	Do. ...	31 8 0
„	161	186-H-1, ditto ...	G. C. Bose & Rhedoynath Biswas.	Do. ...	21 0 0
„	162	184-H-1, ditto ...	Grish Chunder Bose ...	Do. ...	6 0 0
„	163	186-H-1, ditto ...	G. C. Bose & Poorna Chunder Biswas.	Do. ...	11 8 0
„	164	187-H-1-2, ditto ...	Ganendro Narain Dey ...	Do. ...	17 8 0
„	165	187-H-2, ditto ...	Purna Chunder Biswas & Co	Do. ...	24 0 0
„	66	187-H-4 & 187-H-5, ditto ..	G. C. Bose & Hurish Chunder Mitter.	Do. ...	51 0 0
„	167	187-H-6, ditto ...	Soshibhusun Bose & another ...	Do. ...	14 0 0
„	168	187 H-7, ditto ...	G. C. Bose & Aviram Sett ...	Do. ...	13 0 0
„	169	186-H-2, ditto ...	G. C Bose & Sudhansu Mohan Mukerjee.	Do. ...	12 0 0
„	170	187-H-8, ditto ...	Soshibhusun Nandy ...	Do. ...	14 8 0
„	171	187-H-9, ditto ...	G. C. Bose & Hurish Chunder Mitter & others.	Do. ...	27 8 0
„	172	187-H-10 & 187-H-11, ditto ...	Sreeram Chunder Ghosal ...	Do. ...	33 8 0
„	173	187-H-12, ditto ...	Ramdas Ganguly ...	Do. ...	39 8 0
„	174	187-H-12-1, ditto ...	The Oriental Trading Co., "Ld"	Do. ...	37 8 0
„	175	187-H-13, ditto ...	Upendro Nath Cowar ...	Do. ...	14 0 0
„	176	187-H-15, ditto ...	Ditto ...	Do. ...	27 8 0
„	177	187-H-15-1, ditto ...	Banwaree Lall Bose ...	Do. ...	33 8 0
„	178	187-H-16 3 & 187-H-17, ditto ...	Dinobundhu Shaw Brothers, carrying on business as Kala Chand Shaw.	Do. ...	37 8 0
„	179	187-H-14, ditto ...	Kedar Nath Banerjee & Co. ...	Do. ...	27 8 0
„	180	15, Jora Bagan Street ...	Troylockho Nath Ghose ...	Fire-wood ..	4 8 0
„	181	25-H-7 & 25-H-8, ditto ...	Ram Chunder Chatterjee & another.	Wood ...	22 8 0
„	182	25-H 7 & 25-H-8, ditto ...	Ramgopal Sickdar *alias* Gopal Chunder Sickdar. ...	Do. ...	4 8 0
„	183	14, Nimtola Ghat Street ...	Shaik Ismail & Kavimuddy ...	Fire-wood ...	3 8 0
„	184	71, ditto ...	„ Asiruddy ...	Ditto ...	6 8 0
„	185	66, Ruttun Sircar's Garden Street	Prem Chand Hook Lal ...	Ditto ..	8 0 0
„	186	62 H-7, Strand Road ...	Rakhaldas Sircar ...	Wood ...	52 0 0
„	187	67-20-H-1, ditto ...	Sewbux Golapray ...	Do. ...	122 0 0
„	188	67-21-H-8, ditto ...	Grish Chunder Bose & others ...	Do. ...	13 8 0
„	189	67-21-H-8, ditto ...	Ditto ...	Do. ...	40 8 0
„	190	67-23-H-2, ditto ...	Memraj Murlidhur Bagla ...	Do. ...	163 8 0
„	191	67-22, ditto ...	Rai Bhugwandas Bagla Bahadhur.	Do ...	228 8 0
„	192	67-H-26, ditto ...	Muty Lall Radhakisen ...	Do. ...	90 0 0
„	193	67-H-24, ditto ...	Balukund Megraj ...	Do. ...	72 0 0
„	194	67-H-21, ditto ...	Memraj Murlidhur Bagla ...	Do. ...	45 0 0
„	195	67-18, ditto ...	Ganendro Narain Dey ...	Do. ...	22 8 0
„	196	67-16, 67-17, 67-17-H-2 & 67-18, Stand Road.	Bhickraj Sagormull ...	Do. ...	194 8 0
6	197	150, Baranossee Ghose's Street	Mohiney Bewah ...	Fire-wood ...	4 8 0
	198	85-H-6, Upper Chitpur Road	Shabadar Ahmed ...	Timber ...	4 0 0
„	199	85-H-6, ditto ...	Mahatap Khan	Do. ...	4 0 0
„	200	133-A, Maniktola Street ...	Saroda Churn Parial ...	Straw ...	5 8 0
„	201	5-6 1, Mitter's Lane ...	Shabodar Ahmed ...	Wood ...	9 8 0
„	202	24-H-57, Raja Rajendro Mullick's Street.	Tincowree Sen	Fire-wood ...	7 0 0
7	203	20, Armenian Street ...	Shaik Someeruddy ...	Ditto ...	6 0 0

Ward No.	Serial No.	Locality of Warehouses.	Name of License-holders.	Description of Warehouses.	Annual license-fee. Rs.	A.	P.
7	204	100, Lower Chitpur Road ...	Shaik Baliathally ...	Fire-wood ...	4	8	0
8	205	225, Bow Bazar Street ...	Grish Chunder Mondol ...	Timber ...	31	8	0
,,	206	257, ditto ...	A. C. Nandy & Co. ...	Teakwood ...	26	0	0
,,	207	113, College Street ...	Rambromho Dey & another ...	Timber ...	15	0	0
,,	208	5, Dhurmtola Lane ...	Shaik Amuddy	Firewood ...	8	0	0
9	209	151, Amherst Street ...	Boistub Churn Dey ...	Timber .	12	8	0
,,	210	133-H-1, ditto ...	Rajbullubh Chatterjee ...	Do. ...	76	0	0
,,	211	3-H, ditto ...	Mosdin Goledar ...	Do. ...	4	8	0
,,	212	137-H-2, ditto ...	Doyal Chunder Pal & Sons ...	Teak-wood ...	16	8	0
,,	213	136-H-1, ditto ...	Gocool Chunder Mukerjee ...	Timber ...	10	0	0
,,	214	149, ditto ...	Soshibhusun Mukerjee & Co.	Wood ...	9	0	0
,,	215	167-H 5, Bow Bazar Street ...	Umesh Chunder Chunder ...	Timber ...	28	0	0
,,	216	171-H-1, ditto ...	Nuffer Chunder Kolay ...	Do. ...	17	0	0
,,	217	199-H-1, ditto ...	Jodoo Nath Chatterjee ...	Do. ...	27	8	0
,,	218	207 H-1, ditto ...	Tariney Charn Singha, carrying on business as Mohesh Ch. Singha.	Do. ...	22	8	0
,,	219	172, ditto ...	Nilmoney Dey & Co. ...	Wood ...	22	8	0
,,	220	170, ditto ...	Jadoo Nath Mitter ...	Do. ...	21	8	0
,,	221	137, Baliaghatta Road ...	Naffer Chunder Kolay ...	Do. ...	14	0	0
,,	222	139, ditto ...	A. C. Nandy & Co. ...	Teak-wood ...	13	8	0
,,	223	7 & 4, Upper Circular Road ...	Kedar Nath Ghose ...	Ditto ...	24	8	0
,,	224	7 & 8, ditto ...	Kedar Nath Ghose ...	Ditto ...	18	0	0
,,	225	36, ditto ...	Dinoo Mistree ...	Straw ...	3	8	0
,,	226	1, Canal West Road ...	Shama Churn Sen ...	Wood ...	7	8	0
,,	227	2, ditto . .	Gogun Chunder Dey ...	Do. ..	9	0	0
,,	228	6, ditto ...	Afazuddy Khansama ...	Do. ...	5	0	0
,,	229	4, ditto ...	Jotindro Narain Dey ...	Fire-wood ...	2	0	0
,,	230	14, Gas Street ...	The Oriental Gas Co., Ld. ...	Gas ...	Nil.		
,,	231	30. 31 & 33, Machooabazar Street	Fazloo Rahaman ...	Straw ...	5	8	0
,,	232	27-H 1, Mirzapur Street ...	Russick Lal Chatterjee ...	Timber ...	32	0	0
,,	233	27 & 27-1, ditto ...	Abinash Chunder Ghosh ...	Teak-wood ...	22	8	0
,,	234	8-H-1, ditto ..	Kehetter Chunder Bauerjee ...	Timber ...	40	8	0
,,	235	28 1, ditto ...	Brojolal Auddy ...	Teak-wood ...	19	8	0
,,	236	29 H-7, ditto ...	Jogendro Nath Shaw ...	Ditto ...	15	0	0
,,	237	31-H-2, ditto ...	Baikanto Nath Chuckerbutty ...	Ditto ...	15	8	0
,,	238	62, ditto ...	Ashutosh Dey ...	Timber ...	10	0	0
,,	239	62-H-3, ditto ...	Atal Behary Dutt ...	Do. ...	10	0	0
,,	40	63, ditto ...	Abhoy Coomar Nandy ...	Do. ...	8	0	0
,,	241	63, ditto ...	Gogun Ch. Nisikanto Mukerjee	Wood ...	8	0	0
,,	242	63, ditto ...	Harisatya Mitter & Co. ...	Timber ...	10	8	0
,,	243	63 H-1, ditto ...	Kal podo Mukerjee & Co. ...	Do. ...	20	0	0
,,	244	63-H-3, ditto ...	Sarat Chunder Ghose ...	Do. ...	14	8	0
,,	245	63-H-5, ditto ...	Ashutosh Chatterjee & others ...	Do. ...	19	0	0
,,	246	63-H-2, ditto ...	Nando Laul Mullick ...	Do. ...	20	8	0
,,	247	63-H-6, ditto ...	Kally Churun Mukerjee ...	Do. ...	21	8	0
,,	248	1 & 2, Old Bytuckhana Bazar Road	Kedar Nath Ghose ...	Do. ...	18	0	0
,,	249	3-4-8-9 & 10, ditto ...	Sreekanto Bhuttacharjee ...	Do. ...	20	8	0
,,	50	5-H-1, ditto ...	Ditto ...	Do. ...	9	0	0
,,	251	11-H-1, ditto ...	Ditto ...	Wood ...	10	8	0
,,	252	138 H-1, ditto ...	Ditto ...	Timber ...	24	0	0
,,	253	2, Ramkanta Mistree's Lane ...	Rhishikesh Chatterjee ...	Do. ...	9	0	0
10	254	5, 6, 10, 11, 12 & 13, Imambaree Lane.	C. Lazarus & Co. ...	Do. ...	60	0	0
11	255	121-H 1, Bow Bazar Street ...	Kally Das Sircar carrying on business as Pitambar Sircar	Do. ..	24	0	0
,,	256	129, ditto ...	Rajanikanto Mall & Co. ...	Wood ...	13	8	0
,,	257	132-H-1, ditto ...	Sircar, Banerjee & Co. ...	Do. ...	23	8	0
,,	258	126-H, ditto ...	Nilmoney Chakee ...	Do. ...	14	8	0
12	259	7, Srand Road (South) ...	Ahmuty & Co. ...	Tar & varnish	121	8	0
,,	260	40, Bentinck Street ...	Mackintosh Burn & Co. ...	Timber ...	60	0	0
14	261	3-H-12-1, Free School Street ...	Shaik Nasiruddy ...	Straw & hay	9	8	0
,,	262	72, ditto ...	,, Rakhal ...	Ditto ...	11	8	0
,,	263	72, ditto ...	,, Dewanally ...	Hay ...	11	8	0
,,	264	3-H-7, Grant's Street ...	Mohendra Nath Roy ...	Straw ...	18	0	0
,,	265	3-H-1-1, ditto ...	Akhoy Ghose & others ...	Straw & hay	14	8	0
,,	266	3-H-5, ditto ...	Samroo Shaw ...	Ditto ...	31	8	0
,,	267	3-H-6, ditto ...	Dhonraj Shaw ...	Hay ...	14	8	0
,,	268	33-H-2, Jaun Bazar Street ...	Becharam Paul ...	Wood ...	16	0	0
,,	269	133-H-8, ditto .	Rajibally ...	Do. ..	9	0	0
,,	270	133-1-H-52, ditto ...	Bhoju Shaw ...	Hay ...	38	0	0
,,	271	122-1, ditto ...	Amullyadhon Pal & Co. ...	Wood ...	9	0	0
,,	272	14, Oma Churn Das's Lane ...	Munshi Golam Khizar Khan ..	Do. ...	3	0	0
14	273	34, Jaunbazar Street ...	Uttum Churn Koondoo ...	Timber ...	12	8	0
,,	274	131, ditto ...	Chanum Khan ...	Fire wood ...	6	0	0
,,	275	99, Lower Circular Road ...	Akbar Goledar ...	Wood ...	10	8	0
,,	276	13, Munshi Dedarbux's Lane ...	Sherally Khan ...	Fire-wood ...	6	0	0
,,	277	12 1, Newgeepuker East Lane...	P. P. Mukherjee & Co. ...	Wood ...	8	8	0

Ward No.	Serial No.	Locality of Warehouses.	Name of License-holder.	Description of Warehouses.	Annual license-fee. Rs. A. P.
14	278	12-1-1, Nowgeepuker, East Lane	Hari Mohun Das & Brothers ...	Wood ..	5 0 0
,,	279	29, ditto ...	Luckhinarain Das ...	Do. ...	7 0 0
,,	280	99, Ripon Street ...	Shaik Tareef ...	Straw ...	9 0 0
,,	281	106, ditto ..	Poornoo Shaw ...	Fire-wood ...	3 8 0
,,	282	106, ditto ...	Dilan Shaw ..	Ditto ...	3 8 0
,,	283	83, Wellesley Street ...	Tincouree Dutt ...	Timber ...	28 8 0
19	284	10, Andogopal Palit's Lane ...	Jadub Chunder Rakhit ...	Do. ...	6 8 0
,,	285	17-1 & 18, ditto ..	Notobor Das ...	Do. ..	9 8 0
,,	286	2-1-H-1, Behalaghatta Road	Roma Nath Sickdar ...	Fire-wood ...	1 0 0
,,	287	2-1-H-2, ditto ...	Kripasindhu Adicary carrying on business as Juggomohan Biswas.	Ditto ...	4 8 0
,,	288	2, ditto ...	Kanye Luskur	Ditto ...	1 8 0
,,	289	2-1 H 28, ditto ...	Bonomally Maity	Ditto ...	2 0 0
,,	290	2-1-H-5, ditto ...	Brojo Nath Mohapatro ...	Ditto ...	0 8 0
,,	291	2-1-H-7 & 2-1-H-8, ditto ...	Dinonath Dey & another ...	Ditto ...	4 0 0
,,	292	2-1-H-9-1, ditto ...	Shaik Mahomedally ...	Ditto ...	1 8 0
,,	293	2-1-H-9, ditto ...	,, Abdul Salim ...	Ditto ...	1 8 0
,,	294	2-1-H-12, ditto ...	,, Gomany Goledar ..	Ditto ...	1 0 0
,,	295	2-1-H-14, ditto ...	Ramchunder Chuckerbutty ...	Ditto ...	0 8 0
,,	296	3-15 & 3-16, ditto ...	Hetab Lusker	Ditto ...	3 0 0
,,	297	3-17, ditto ...	Shaik Abdool Ahad ...	Ditto ..	2 0 0
,,	298	2-1-H-6, ditto ...	Raghoo Nath Nayek ...	Ditto ...	1 8 0
,,	299	3-19, ditto ...	Hary Ojah	Ditto ...	1 8 0
,,	300	3-19, ditto ...	do.	Ditto ..	1 8 0
,,	301	2-1-H-19, ditto ...	Shaik Khodabux Mollah ...	Ditto ...	1 8 0
,,	302	2-1-H-20, ditto ...	,, Essuf Meah ...	Ditto ...	0 8 0
,,	303	2-1-H-21, ditto ...	Roghoonath Nayek & another...	Ditto ...	1 8 0
,,	304	2-1-H-21-1, ditto ...	Shaik Essuf Meah ...	Ditto ...	1 8 0
,,	305	3-a-H-25, ditto ...	,, Dursatullah ...	Ditto ...	0 8 0
,,	306	2-1-H-26, ditto ...	,, Saboor Mullick ...	Ditto ...	1 0 0
,,	307	2-1-H-27, ditto ...	,, Rosoonally	Ditto ...	1 8 0
,,	308	2-1-H-28, ditto ...	Dwarka Nath Sickdar ...	Ditto ...	2 0 0
,,	309	3 a-H-2 ', ditto ..	Ditto	Ditto ...	2 0 0
,,	310	2-1-H-29, ditto ...	Ramanath Sickdar ...	Ditto ...	1 8 0
,,	311	2-1-H-32, ditto ...	Janki Nath Sickdar ...	Ditto ...	1 0 0
,,	312	2-1-H-33, ditto ...	Nilmadhab Coondoo ...	Ditto ...	1 8 0
,,	313	2-1-H-34, ditto ...	Kedar Nath Biswas ...	Ditto ...	1 8 0
,,	314	2-1-H-35, di to ..	Dinonath Dey & another ...	Ditto ...	2 0 0
,,	315	11, ditto ...	Sreeram Chunder Mondol ...	Timber ...	9 0 0
,,	316	10-1, ditto ...	P. P. Mukerjee & Co. ..	Do. ...	6 0 0
,,	317	1-H-1, Canal South Road ...	Radhakristo Chuckerbutty & others.	Fire-wood ...	15 8 0
,,	318	2-H-1, ditto ...	Ramchunder Gan... ...	Ditto ...	8 0 0
,,	319	3 H-1, ditto ..	Gobordhon Pal & Nogendro Nath Dey.	Ditto ...	21 0 0
,,	320	3-H-2, ditto ...	Uma Churn Dalal	Ditto ...	15 0 0
,,	321	4-H-1, ditto ...	Soshibhusan Dey	Ditto ...	13 8 0
,,	322	5, ditto ...	Bepin Behary Coondoo ...	Ditto ...	9 0 0
,,	323	7-H-1, ditto ...	Jadub Chunder Chakee ..	Ditto ...	8 0 0
,,	324	7-H-2, ditto ...	Nando Coomar Ghose ...	Ditto ...	8 0 0
,,	325	8-H-1, ditto ...	Mohima Churn Dey ...	Ditto ...	20 8 0
,,	326	9-H-1, ditto ...	Ditto	Ditto ...	13 8 0
,,	327	10-H-1, ditto ...	Nasir Goledar & another ...	Ditto ...	13 0 0
,,	328	11-H-1, ditto ...	Dwarka Nath Biswas ...	Ditto ..	13 0 0
,,	329	12-H-1, ditto ...	Nasir Goledar	Ditto ...	3 8 0
,,	330	14-H-1, ditto ...	Jogendro Nath Coondoo ...	Ditto ...	18 0 0
,,	331	14-H-1-1, ditto ...	Khitish Chunder Sircar ...	Ditto ...	15 0 0
,,	332	15-H 1, ditto ...	Bissessur Roy	Ditto ...	7 0 0
,,	333	16-H-1, ditto ...	Roikonto Nath Coondoo ...	Ditto ...	22 8 0
,,	334	18 H, ditto ...	Dijobor Das Rohoman Joddar...	Ditto ...	2 0 0
,,	335	19, ditto ...	Jadub Chunder Chakee ...	Ditto ...	6 8 0
,,	336	20-H-1, ditto ...	Uma Churn Dalal ...	Ditto ...	8 8 0
,,	337	21-H-2, ditto ..	Nobin Chunder Haradhon Coondoo.	Timber ...	2 8 0
,,	338	22-H-1, ditto ...	Satish Chunder Biswas ...	Fire-wood ...	10 0 0
,,	339	22-H-2, ditto ...	Dwarka Nath Biswas ...	Ditto ...	7 0 0
,,	340	23-H-1, ditto ...	Ditto ...	Ditto ...	3 0 0
,,	341	2, Convent Road ...	Hem Chunder Ghose ...	Ditto ...	4 8 0
,,	342	1, Foolbagan Road ...	Roghoonandan Shaw ...	Straw & hay	3 8 0
,,	343	8, Gooreapara Road ...	Law, Ghose & Co.... ...	Timber ...	18 0 0
,,	344	1-H 1, Hareetola Road ...	Chunder Kanto Sircar ...	Fire wood ...	15 8 0
,,	345	142-H-24, Lower Circular Road	Ditto ...	Ditto ...	8 0 0
,,	346	142 H-24, ditto ...	Nonee Gopal Newgee ...	Ditto ..	8 0 0
,,	347	154, ditto ...	Ram Chunder Paul ...	Wood, &c. ...	15 0 0
,,	348	154, ditto ...	Shaik Abbasally	Do. ...	15 0 0
,,	349	47, Middle Road, Entally ...	Nobokristo Nag	Timber ...	9 0 0
,,	350	1, South Road, Entally ...	Amulya Chunder Khan ...	Teak-wood ...	15 0 0
,,	351	ditto ...	Abinash Chunder Das ...	Timber ...	13 8 0

Ward No.	Serial No.	Locality of Warehouses.	Name of License-holder.	Description of Warehouses.	Annual license-fee. Rs	A.	P.
19	352	18, South Road, Entally ...	Poorna Chunder Dey & Co. ...	Timber ...	9	0	0
,,	353	18, ditto ...	Amoolya Chunder Khan ...	Wood ...	4	8	0
20	354	44, Baniapuker Lane ...	Mohendra Lal Dey & Sons ..	Timber ...	8	0	0
,,	355	2, Janunogore Road ...	Ram Chunder Mohinder ...	Teak-wood ...	6	0	0
,,	356	2-H-3, ditto ...	Babujan Goledar	Straw ...	6	0	0
21	357	12, Chuckerbore Lane ...	Umachurn Bose	Do. ...	5	8	0
,,	358	47, Kurrya Road ...	Kadirbux Goledar	Fire-wood ...	5	0	0
,,	359	219, Lowor Circular Road ...	Santa Lal Shaw	Straw & hay	3	8	0
,,	360	220, ditto ...	Mozahar Goledar	Straw ...	9	0	0
,,	361	136, Russa Road, South ...	Harish Chunder Ghose ...	Timber ...	8	0	0
,,	362	78, Tollygunge Road ...	Pootee Bewa	Straw ...	3	8	0
,,	363	73, ditto ...	Nim Chand Nandy ...	Do. ...	2	8	0
,,	364	71, ditto ...	Shama Churn Ambica Churn Ghose.	Wood & straw	4	0	0
,,	365	72, ditto ...	Gobindo Chunder Das ...	Fire-wood ...	3	8	0
,,	366	74, ditto ...	Bhupendro Krisna Bhanja ...	Ditto ...	4	8	0
,,	367	75, ditto ...	Adhar Chunder Sett ...	Straw ...	1	8	0
,,	368	76, ditto ...	Brojonath Bose	Do. ...	3	8	0
,,	369	77, ditto ...	Bepin Behary Das ...	Do. ...	3	8	0
,,	370	75, ditto ...	Adhar Chunder Sett & another	Do. ...	4	8	0
,,	371	75, ditto ...	Hury Churn Paramanick ...	Straw & wood	2	8	0
,,	372	97, 98 & 99, ditto ..	Gopal Laul Mondol ...	Straw ...	19	8	0
,,	373	109, ditto ...	Shamakally Dabi	Fire-wood ...	4	8	0
,,	374	109, ditto ...	Krisna Chunder Banerji ...	Ditto ...	8	0	0
22	375	2, Chawlputty Road ...	Matongeenee Dassee & others ...	Wood, &c. ...	4	0	0
,,	376	3, ditto ...	Dinonath Paul	Straw ...	7	0	0
,,	377	4-H-1, ditto ...	Ditto	Do. ...	7	0	0
,,	378	5-H-2, ditto ...	Mutty Lal Laha	Do. ...	6	8	0
,,	379	50, ditto ...	Dinonath Paul	Do. ...	4	8	0
,,	380	53-H-1, ditto ...	Radhakanto Bhuttacharji ...	Do. ...	6	8	0
,,	381	13, ditto ...	Biraj Kristo Poddar ...	Do. ...	2	0	0
,,	382	1, Haldarpara Road ...	Sitanath Shaw	Fire-wood ...	4	0	0
,,	383	1-H-1, Harish Chunder Chatterjee's Street.	Shaik Haniff	Ditto ...	6	0	0
,,	384	28-1, ditto ...	Samapodo Dutt	Ditto ...	4	8	0
,,	385	29-1, ditto ...	Jodoo Nath Shaw & others ..	Ditto ...	4	8	0
,,	386	29-H-1, ditto ...	Judistir Mondol	Ditto ...	5	8	0
,,	387	38, ditto ...	Adhur Chunder Shaw ...	Timber ...	4	8	0
,,	388	56, ditto ...	Mohendro Nath Jegendro Nath Mukerji.	Do. ...	5	0	0
,,	389	60, ditto ...	Ditto ditto ...	Straw ...	7	0	0
,,	390	62-H-1, ditto ...	Kalachand Cowar	Do. ...	8	0	0
,,	391	61, ditto ...	Mohendro Chunder Dutt ...	Wood ...	4	8	0
,,	392	87, ditto ...	Bissessur Chatterji ...	Fire-wood ...	4	8	0
,,	393	83, ditto ...	Borodakanto Sircar ...	Ditto ...	4	8	0
,,	394	23, Kalighat Road ...	Jatadharee Moonshee ...	Teak-wood ...	4	0	0
,,	395	25-1, ditto ...	Promotho Nath Ghose ...	Timber ...	3	8	0
,,	396	48-H-5, ditto ...	Hury Churn Shaw ...	Fire-wood ...	6	0	0
,,	397	8-H-1, Katwa Khootee Road ...	Bosiruddin Goledar ...	Ditto ...	5	8	0
,,	398	9-H 4, ditto ...	Koylas Chunder Nundy ...	Ditto ...	5	0	0
,,	399	6, ditto ...	Shaik Enaethullah ...	Ditto ...	4	8	0
,,	400	6-1, ditto ...	Thacoordas Ghose	Straw ...	3	8	0
,,	401	3-1, Muddun Paul's Lane	Ram Chunder Nandy ...	Fire-wood ...	7	8	0
,,	402	9-H-5, ditto ...	Budruddin Goledar ...	Ditto ...	3	8	0
,,	403	15 & 15-1-H-1, ditto ...	Kristo Chunder Sircar ...	Timber ...	10	8	0
,,	404	36, ditto ...	Nehazuddy Goledar ...	Fire-wood ...	4	8	0
,,	405	36-H-1, ditto ...	Shaik Taleb Goledar ...	Ditto ...	4	8	0
,,	406	4, ditto ...	Banikanto Ganguly ...	Straw & hay	5	8	0
,,	407	61-1, Russa Road, North ...	Tripondessur Mitter ...	Teak-wood ...	12	0	0
,,	408	151, Russa Road, South ...	Gossaindas Shaw	Fire-wood ...	7	0	0
,,	409	12, Sakareepara Road ...	Shaik Keramotullah & another	Ditto ...	4	8	0
,,	410	124, Tollygunge Road ...	Sagor Dhara	Fire-wood & straw.	4	8	0
,,	411	2-H-33, Ulfatbagan Road ...	Bolaki Shaw	Straw ...	3	0	0
23	412	3-164, Bridge Road ...	Nibarun Chunder Dey ...	Fire-wood ...	0	8	0
,,	413	15-18, Chetla Road ...	Raye Churn Das	Ditto ...	3	0	0
,,	414	17-1, ditto ...	Horay Krisna Jana ...	Ditto ...	5	0	0
,,	415	7, Chetla Haut Road ...	Baburam Dutt	Ditto ...	2	8	0
,,	416	9-1, Gopalnagar Road ...	Gosta Behary Paul ...	Ditto ...	2	0	0
,,	417	21-8, ditto Lane ...	Chunder Kanto Bose ...	Ditto ...	3	0	0
,,	418	21-22, ditto do. ...	Hari Churn Shaw & another ...	Ditto ...	6	8	0
,,	419	1-5, ditto do. ...	Sreenath Chunder ...	Ditto ...	4	8	0
,,	420	3-179, Kallyghat Bridge Road	Amrito Lal Dhara ...	Ditto ..	2	0	0
,,	421	3-126, ditto ...	Kedar Nath Paul ...	Ditto ...	2	8	0
,,	422	3-175, ditto ...	Sreenath Chunder Chunder ...	Dttoo ...	3	8	0
,,	423	72, Moyerpur Road ...	Ambica Churn Dey ...	Straw ...	4	8	0
25	424	144, Circular Garden Reach Road.	Ashadullah Goledar ...	Timber ...	4	8	0
,,	425	89-H-2, Diamond Harbour Road	Omesh Chunder Das ...	Wood ...	12	0	0

Ward No.	Serial No.	Locality of Warehouses.	Name of License-holder.	Description of Warehouse.	Annual license-fee.
					Rs. A. P.
25	426	90-1-H-5, Diamond Harbour Road.	Troylockhonath Dutt ...	Wood ...	9 0 0
,,	427	89-H-3, 89-H-4, and 90-H-2, Diamond Harbour Road.	Kali Churn Pal & others ...	Do. ...	18 0 0
,,	428	90-1 H-2, Diamond Harbour Road.	Radhanath Ghose ..	Do. ...	7 8 0
,,	429	90-1-H-3, ditto ...	Adhur Chunder Dutt & another.	Do. ...	7 8 0
,,	430	89, ditto ...	Jogendro Nath Das ...	Do. ...	2 0 0
,,	431	1-2, Munshiganj Road ...	Omed Khan ...	Fire-wood ...	3 0 0
,,	432	1-3, ditto ...	Ainuddy ...	Ditto ...	3 8 0
,,	433	4-H, ditto ...	Umasundory Kaminysundory Dassee.	Ditto ...	9 8 0
,,	434	4-6, ditto ...	Nerod Coomar Banerjee ...	Ditto ...	9 8 0
,,	435	4 8, ditto ...	Bhoobon Mohun Mondol ...	Ditto ...	26 0 0
,,	4 6	5, ditto ...	Jogendro Chunder Ghose ...	Straw ...	6 0 0
,,	437	6-1, ditto ...	Shaik Kenab ...	Fire-wood ...	11 8 0
,,	438	6-5, ditto ...	Nobocoomar Haldar ...	Ditto ...	9 8 0
,,	439	9-18, ditto ...	Dhannoo Mullick ...	Straw ...	6 8 0
,,	440	10, ditto ...	J Stewart, Brown & Co. ...	Wood ...	13 8 0
,,	441	12-5, ditto ...	Lolit Mohun Dey ...	Do. ...	12 8 0
,,	442	12-6, ditto ...	Hem Chunder Chattopadhya ...	Fire-wood ...	9 0 0
,,	443	27, ditto .	Horomoni Bewah ...	Straw ...	6 0 0
,,	444	33, ditto ...	Akhoy Coomar Sen, carrying on business as Beharilal Sen.	Wood & straw	6 8 0
,,	445	33-2-H-9, ditto ...	Gobindo Chunder Das ...	Ditto ...	9 0 0
,,	446	33-2-H-5, ditto ...	Janokee Nath Shaw ...	Straw ...	9 0 0
,,	447	35-1, dttto ...	Munder Shaw ...	Wood ...	6 0 0
,,	448	36, ditto ...	Sukdeb Sen ...	Straw ..	4 8 0
,,	449	36, ditto ...	Joydu Khan & Saboor Khan ...	Fire-wood ...	2 8 0
,,	450	2, Nalooapara Road ...	Haradhon Bose ...	Wood ...	2 0 0
,,	451	32, Puddopuker Street ...	Kherod Gopal Mukerjee & Co.	Timber ...	16 0 0
,,	452	86, ditto ...	Troylockho Nath Roy ...	Do. ...	13 8 0
,,	453	28-1, Ramcomul Mukerjee's Street.	Narain Chunder Seal ...	Do. ...	9 8 0

List of Jute Warehouses licensed in 1901-1902.

					Rs. A. P.
1	1	178 to 178-1, Upper Chitpur Road, and 2 and 2-2, Ramkanto Bose's Street. ...	Messrs. Finlay, Muir & Co. ..	Jute ...	243 0 0
,,	2	202-1, Upper Chitpur Road, and 45, Durga Churn Mookerjee's Street.	Ambica Churn Mitter ...	Do. ...	135 0 0
,,	3	206, Upper Chitpur Road ...	Kanye Lall Khan ...	Do. ...	97 8 0
,,	4	208, ditto ...	S. J. Soloman ...	Do. ...	104 0 0
,,	5	1, Chitpur Bridge Road ...	Messrs. George Henderson & Co.	Do. ...	105 0 0
,,	6	37-1, Canal West Road ...	Hurish Chunder Dutt ...	Do. .	36 0 0
,,	7	39-1, ditto ...	Soorjee Coomar Gooroo Churn Shaw.	Do. ...	54 0 0
,,	8	39-2, ditto ...	Hurish Chunder Dutt ...	Do. ...	90 0 0
,,	9	39-3, ditto ...	Kally Sunker Taruck Nath Coondoo.	Do. ...	45 0 0
,,	10	6, Durga Churn Mukerjee's Street.	Doyal Chand Shaw ...	Do, ...	60 8 0
,,	11	7, ditto ...	Peary Mohun Biswas ...	Do. ...	27 0 0
,,	12	42 & 43, ditto ...	Dinobundhu Pranbundhu Sacchowdry.	Do. ...	324 0 0
,,	13	41 & 41-1, ditto ...	Ditto	Do. ...	90 0 0
,,	14	7, Dhunia Bagar Lane ...	Hurish Chunder Bissonath Shaw.	Do. ...	83 8 0
,,	15	5-1, Gopal Chunder Newgee's Lane. ...	Sarodaprosad Mukerjee ...	Do. ...	18 0 0
,,	16	16, ditto ...	Ditto ...	Do. ...	18 0 0
,,	17	12, Gailiffe Street ...	Nilmadhub Sirkdar & another	Do. ...	36 0 0
2	18	1, Aheeretola Street ...	Thansing Koromchand ...	Do. ...	90 0 0
,,	19	5, ditto ...	Ditto ...	Do. ...	135 0 0
,,	20	169, ditto ...	Kisen Chand Bhoom Singh ...	Do. ...	225 0 0
,,	21	170, ditto ...	Projohory Poorna Chunder Dey Chowdry & others.	Do. ...	102 8 0
,,	22	172, ditto ..	Idol Gopeenath Jew Sabayet Sristidhur Dey.	Do. ...	90 0 0
,,	23	20, Bonomally Sircar's Street ...	Gooroo Churn Paul & others ...	Do. ...	31 8 0

Ward No.	Serial No.	Locality of Warehouses.	Name of License-holder.	Description of Warehouses.	Annual license-fee.
					Rs. A. P.
2	24	9, Bonomally Sircar's Street ...	Poornanando Shaw ...	Jute ...	63 0 0
„	25	247-48, Upper Chitpur Road ...	Messrs. Finlay, Muir & Co. ...	Do. ...	750 0 0
„	26	77, Durmahatta Street ...	Behary Lal Pyne ...	Do. ...	81 0 0
„	27	76-2, 80 & 80-1, ditto ...	Ditto ...	Do. ...	187 8 0
„	28	81, ditto ...	Ditto ...	Do. ...	52 8 0
„	29	87 to 87-53, ditto ...	Sett Dwarka Dass ...	Do. ...	675 0 0
„	30	97, ditto ...	Oroonbala Dabee ...	Do. ...	31 8 0
„	31	135, ditto ...	Chundy Lal Singha & others	Do. ...	270 0 0
„	32	136 to 136-8, ditto ...	Dakhayonee Dassee ...	Do. ...	157 8 0
„	33	134, ditto ...	Kanye Lal Khan ...	Do. ...	72 8 0
„	34	138-39, ditto ...	Adaito Churn Mondol & others	Do. ...	27 0 0
„	35	143 & 143-1, ditto ...	Gooroo Gobindo Shaw ...	Do. ...	675 0 0
„	36	144, ditto ...	The Secretary to the Port Commissioners.	Do. ...	360 0 0
„	37	108, ditto ...	Mothooramohun Nandy ...	Do. ...	48 8 0
„	38	1, Gailiffe Street ...	Messrs George Henderson & Co.	Do. ...	667 8 0
„	39	1-1, ditto ...	Ditto ...	Do. ...	135 0 0
„	40	16, Hurro Chunder Mullick's Lane. ...	Gooroo Churn Shaw ...	Do. ...	67 8 0
„	41	24, ditto ...	Surjee Coomar Biswas & others.	Do. ...	22 8 0
„	42	4, Horro Chunder Mullick Street.	Prolad Chunder Shaw ...	Do. ...	60 0 0
„	43	5, ditto ...	Jogobundhu Soshi Mohun Sha Poramanick.	Do. ...	108 0 0
„	44	6, ditto ...	Sreemotty Makundosundory Dassee.	Do. ...	68 0 0
„	45	7 & 7-1, ditto ...	Jogendra Nath Chuckerbutty...	Do. ...	48 0 0
„	46	10, ditto ...	Sitanath Shaw Chowdry ...	Do. ...	40 8 0
„	47	11, ditto ...	Dwarka Nath Shaw ...	Do. ...	67 8 0
„	48	12, ditto ...	Brojalal Roy Benodilal Roy ...	Do. ...	261 0 0
„	49	13-6, ditto ...	Bissonath Luckhinath Poramanik.	Do. ...	72 0 0
„	50	14, ditto ...	Brojalal Roy & others ...	Do. ...	139 8 0
„	51	25, ditto ...	Gooroodas Coondoo Chowdry ...	Do. ...	90 0 0
„	52	2, ditto ...	Bessumbhur Mullick ...	Do. ...	38 0 0
„	53	16, ditto ...	Harendro Kumar Roy Chowdhury & others.	Do. ...	72 0 0
„	54	19, ditto ...	Nilmadhub Shaw & others ...	Do. ...	162 0 0
„	55	29, ditto ...	Radharomon Shaw ...	Do. ...	67 8 0
„	56	27, ditto ...	Chundsikur Radhicalal Shaw	Do. ...	45 0 0
„	57	28, ditto ...	Benodbehary Khan ...	Do. ...	54 0 0
„	58	20 & 21, ditto ...	Soshibhusun Sha Chowdry ...	Do. ...	72 0 0
„	59	2-1, Joy Mitter's Ghat Lane ...	Kissory Mohun Roy ...	Do. ...	68 8 0
„	60	6, ditto ...	Jodoonath Coondoo & another	Do. ...	112 8 0
„	61	15, Kasi Mitter's Ghat Street ...	Messrs. Finlay, Muir & Co. ...	Do. ...	63 0 0
„	62	27-2 & 28, ditto ...	Kissory Mohun Roy ...	Do. ...	184 8 0
„	63	17-1 & 18, Manic Bose's Ghat Street. ...	Noder Chand Shaw ...	Do. ...	45 0 0
„	64	18-1, ditto ...	Ditto ...	Do. ...	12 0 0
„	65	44, ditto ...	Dabendro Deb Das ...	Do. ...	126 0 0
„	66	46, ditto ...	Nityanando Shaw ...	Do. ...	122 0 0
„	67	82, Nimtola Ghat Street ...	Jodoo Nath Sha Chowdry ...	Do. ...	180 0 0
„	68	1, Nayan Soor's Lane ...	Sabitry Sundory Dassee ...	Do. ...	63 0 0
„	69	7, ditto ...	Sumbhu Nath Sha Chowdry & another.	Do. ...	75 0 0
„	70	8, ditto ...	Budun Chunder Shaw & another.	Do. ...	97 8 0
„	71	9, ditto ...	Nobin Chunder Koondoo & another.	Do. ...	90 0 0
„	72	3 to 3-3, Sova Bazar Street ...	Rashbehary Shaw & others ...	Do. ...	594 0 0
„	73	4, ditto ...	Kanye Lal Khan ...	Do. ...	44 0 0
„	74	5, ditto ...	Bissumbhur Mullick ...	Do. ...	187 8 0
„	75	7, ditto ...	Chundersekur Sreekanto Sha Poramanick.	Do. ...	72 0 0
„	76	10, ditto ...	Horendro Coomar Roy Chowdry and others.	Do. ...	100 8 0
„	77	12, ditto ...	Sarodaprosad Soor ...	Do. ...	45 0 0
„	78	17, ditto ...	Gooroodas Coondoo Chowdry ...	Do. ...	90 0 0
„	79	71, ditto ...	Goyasundory Dassee ...	Do. ...	54 0 0
„	80	72, ditto ...	Damodar Poramanick & others	Do. ...	135 0 0
„	81	78 & 79, ditto ...	Mohiney Kanto Shaw ...	Do. ...	189 0 0
„	82	90, ditto ...	Sreedam Chunder Shaw & others	Do. ...	180 0 0
„	83	91 & 92, ditto ...	Adoyto Churn Mondol & others	Do. ...	135 0 0
„	84	73, ditto ...	Dhaniram Kasinath haw ...	Do. ...	193 8 0
„	85	93 & 94, ditto ...	Lalbehary Shadkhan ...	Do. ...	54 0 0
„	86	95 & 96, ditto ...	Jugut Mohun Shaw ...	Do. ...	180 0 0
„	87	97, ditto ...	Sitanath Sha Chowdry ...	Do. ...	31 0 0

Ward No.	Serial No.	Locality of Warehouses.	Name of License-holder.	Description of Warehouses.	Annual license-fee. Rs. A. P.
2	88	98, Sova Bazar Street ...	Sitanath Sha Chowdry ...	Jute ...	225 0 0
		98-1, ditto ...	Juggobundhu Sha Chowdry & others.	Do. ...	67 8 0
,,	89				
,,	90	98-2, ditto ...	Ditto ditto ...	Do. ...	225 0 0
,,	91	100, ditto ...	Adoyto Churn Mondol & others	Do. ...	112 8 0
3	92	1, Budree Das Temple Street ...	Gopee Mohun Roy ...	Do. ...	72 0 0
,,	93	4, ditto ...	Manick Chunder Koondoo ...	Do. ...	76 8 0
,,	94	6, ditto ...	Surjee Coomar and Gooroo Charn Shaw.	Do. ...	36 0 0
,,	95	19, ditto ...	Hurish Chunder Dutt ...	Do. ...	22 8 0
,,	96	24, ditto ...	Gooroo Churn Shaw ...	Do. ...	45 0 0
,,	97	25, ditto ...	Trannath Banerjee ...	Do. ...	36 0 0
,,	98	24-A, Canal West Road ...	Lolit Mohun Brindabon Shaw	Do. ...	54 0 0
,,	99	25, ditto ...	Ditto ditto ...	Do. ...	40 8 0
,,	100	29, ditto ...	Goopee Mohun Roy ...	Do. ...	98 0 0
,,	101	29-1. ditto ...	Ditto ...	Do. ...	72 0 0
,,	102	31, ditto ...	Trainnath Banerjee ...	Do. ...	63 0 0
,,	103	32, ditto ...	Issur Chunder Muluk Chand Shaw.	Do. ...	54 0 0
,,	104	35-4-1, ditto ...	Gobindo Chunder Shaw ...	Do. ...	73 8 0
,,	105	35-5, ditto ...	Parbatty Churn Roy & others	Do. ...	90 0 0
,,	106	37, ditto ...	Atul Krisna Dutt ...	Do. ...	15 0 0
,,	107	55, Gourcobaree Lane ...	Trannath Banerjee ...	Do. ...	33 0 0
,,	108	58, ditto ...	Hurish Chunder Dutt ...	Do. ...	54 0 0
,,	109	4, Halseebagan Lane ...	Lalit Mohon Shaw & another	Do. ...	40 8 0
5	110	193, Durmahatta Street and 58, Strand Road. ...	Messrs. Ewing & Co., Agents, Riverside Press Co., Ld.	Do. ...	283 0 0
,,	111	195, Durmahatta Street ...	Adoyto Churn Mondol & others	Do. ...	36 0 0
,,	112	202, ditto ...	Gobind Chand Nabin Chand Dutt.	Do. ...	300 0 0
,,	113	28, Jorabagan Street ...	Ramessur Aitch ...	Do. ...	73 8 0
,,	114	26 & 27-H-1-A, Strand Road ...	Managing Agents, I. G. S. N. Co., Ld.	Do. ...	230 8 0
,,	115	57, ditto ...	Jodoonath Shaw Chowdry ...	Do. ...	130 8 0
,,	116	67-27-H-1-B, ditto ...	Managing Agents, I. G. S. N. Co., Ld.	Do. ...	230 8 0
,,	117	67-9, ditto ...	Messrs. McNeil & Co., Agents, R. S. N. Co., Ld.	Do. ...	495 0 0
,,	118	67-2 & 67-31H-1, ditto ...	Messrs Ewing & Co., Agents, Riverside Press Co., Ld.	Do. ...	750 0 0
,,	119	67-4-5 & 67-4-6, ditto ...	Messrs. Kilburn & Co., Managing Agents, I. G. N. & Railway Co., Ld.	Do. ...	87 0 0
9	120	135, Belliaghatta Road ...	Messrs. George Henderson & Co.	Do. ...	90 0 0
,,	121	4, Canal West Road ...	D. T. Dewar, Esq., Manager, Baranagar Branch Mill	Do. ...	170 8 0
,,	122	308, Upper Circular Road ...	The Manager, E. B. S. Railway	Do. ...	450 0 0
19	123	6, Gooreapara Road ...	Messrs. Bird & Co. ...	Do. ...	150 0 0
,,	124	9, Circular Garden Reach Road	,, Gillanders, Arbuthnot & Co.	Do. ...	216 0 0

RESOLUTION ON THE ANNUAL REPORT ON THE POLICE ADMINISTRATION OF THE TOWN OF CALCUTTA AND ITS SUBURBS FOR THE YEAR 1901.

RESOLUTION No. 3258J.

POLICE.

Dated Calcutta, the 29th July 1902.

READ—

The Annual Report on the Police Administration of the Town of Calcutta and its Suburbs for the year 1901.

Read also—

The Reports for the two previous years and the orders of Government recorded thereon.

IN contrast to previous years, the Commissioner of Police, Calcutta, has submitted his Annual Report on the Police Administration in the Town and Suburbs of Calcutta, with excellent punctuality.

2. The office of Commissioner of Police was held from the beginning of the year to 16th April by Mr. A. H. James: on his retirement, Mr. E. M. Showers was appointed to the post, but retired on the 5th September to join a responsible appointment under Government in South Africa. For the remainder of the year Mr. F. L. Halliday, Officiating Deputy Commissioner, acted as Commissioner. The constitution of the force under the Commissioner's control underwent practically no change during the year, and the number of casualties amongst its members, and of punishments inflicted, presents little variation from the figures of preceding years.

3. As regards the working of the force, the number, both of cognizable offences reported and of non-cognizable cases instituted, shows a remarkable decrease in comparison with the figures for the two preceding years 1899 and 1900. Under cognizable offences there were 25,115 cases reported, against 38,353 in 1900 and 34,282 in 1899: the decrease in the matter of the more serious heads of crime, offences against public tranquility, persons and property calls for little notice, and it is only when the figures under the more unimportant heads, such as 'Public and Local nuisances,' 'Police Act' and 'Cruelty to Animals Act' come to be examined, that the decrease becomes significant. The figures in Statement A, Part III, in the two Reports for 1900 and 1901, show that there were in 1900, 3,571 cases of Public and Local nuisances and 10,037 cases under the Police Act reported by the Police, against 1,852 and 5,809, respectively, in 1901. Similarly, there were in 1901 only 3,602 offences reported under the Cruelty to Animals Act, as compared with 6,780 in 1900.

These figures are of offences reported and not of prosecutions instituted: the percentage of the latter to cases reported, as also of the success of such prosecutions, is much the same in 1901 as in previous years, and calls for no notice.

Though this was not explained in the Report, it has subsequently been elicited that the decrease under 'Public and Local nuisances' is fictitious and due to the non-inclusion by the Chief Presidency Magistrate under this head of 'drunk and disorderly cases,' which have this year for the first time been shown under the Police Act. This departure has made a difference roughly of 2,000 in the cases returned under 'Public and Local nuisances' by the Court in question, and explains the apparent decrease in the Commissioner's Report. The explanation, however, makes the decrease in the figures under the 'Police Act' the more remarkable: there is nothing to show that the number of 'drunk and disorderly' cases in 1901 was less than in 1900, and for the purposes of comparing the Commissioner's figures under the Police Act for the two years, it is necessary to eliminate from the figures for the later year the 2,000 (roughly) cases, which have now been shown there for the first time,

with the remarkable result that the figures under this head fall from 10,037 in 1900 to 3,809 in 1901.

In his Report the Commissioner contents himself with briefly ascribing this noticeable decrease, as well as the little less marked diminution in the 'Cruelty to Animals' cases, to the general strike amongst carters and hackney-carriage drivers, which took place in Calcutta and its Suburbs in June 1901, merely noting that the average of offences reported under 'Public and Local nuisances,' 'Police Act,' and 'Cruelty to Animals' averaged 1,912 per month in the five months preceding the strike, and 731 per month in the seven months which followed it. He has not discussed in the Report how far these significant figures bear out the findings of Government as to the causes which led to this widespread strike, though the desirability of such discussion would appear to be obvious. From subsequent communications, however, with the Commissioner, it appears that as regards the 'Cruelty to Animals' cases, the number sent up by the Police shows little variation from that sent up by them in previous years, and that the decrease noticed is due to the employment by the Calcutta Society for the Prevention of Cruelty to Animals of fewer Agents, and to diminished activity amongst the numbers so reduced since the strike. The reasons for the decrease under this head are therefore to be sought for outside the actual working of the Police, and need not be further examined here.

The case with regard to the falling off of offences under the Police Act is different: the Commissioner of Police attributes the result under this head to the fact that the men under him refrained from making arrests under clauses (3), (6), and (7) of section 66, Act IV of 1866, and the corresponding section in the Suburban Act, in order to minimise the chance of another strike: the sections in question contain provisions against the driving of carts, carriages or vehicles on the wrong side of the road, the leaving of such conveyances without due control, and the obstruction of thoroughfares by such conveyances. The full enquiry into the strike of June 1901 brought out clearly that one of the chief causes which led to it was the habitual blackmailing by the Police of hackney-carriage drivers and cartmen in Calcutta: on the figures now under examination there can thus be set only one of two interpretations; either that the Calcutta Police misused their powers under the Act even more seriously than appeared from the facts and figures before the Committee which enquired into the strike, or that since the strike the Police have neglected to carry out the provisions of the law with regard to the regulation of traffic. It appears that the late Commissioner was of opinion that too much power was given to the rank and file of the Police, and gave them to understand that such cases should be dealt with by officers of the force only. This was, it is stated, one cause of the decrease, another cause was that the Police were unnerved by the punishments inflicted on some of their number, so that they preferred to remain passive spectators of the infringement of the law. It is clear that they failed in the proper performance of their duties either before or after the strike. The Lieutenant-Governor would have been better pleased if the Commissioner's Report had contained some discussion of the facts, and he trusts that with improved supervision the Police will show more consistent work, neither excess of zeal nor neglect of their duties in future.

It is understood that the Commissioner has now under examination the figures for the present year so far as they are available, and in view of the fact that there was within the last month a second, though abortive, attempt at a cart strike in Calcutta, the Lieutenant-Governor trusts that the figures will be very closely scrutinised with a view to seeing that the attempted strike was not the outcome of revived practices of blackmailing on the part of the local Police. In this connection it may be noted that the arrangements which have lately been sanctioned for the better supervision of the control of the cart traffic between the East Indian Railway station at Howrah and the Strand Road should do much to put a final stop to such illegal practices so far as they affect the cartmen who ply within this area.

The large decrease in non-cognizable cases from 27,508 in 1900 to 9,640 in 1901 is almost entirely the result of a diminution under municipal cases from 22,429 to 5,893. This is chiefly the outcome of the changes in procedure

introduced by the new Municipal Act, which did not come into force till April 1900. Under the new Act the professional and license tax, and the tax on carriages and animals are generally realized without recourse to the Courts, and prosecutions are seldom resorted to. Thus in 1900 there were 12,500 license-tax prosecutions, and only 69 in 1901 : the figures for 1900 were also swollen by 4,245 cases under the old Act, all such cases being required by the law to be filed before 1st April 1900.

4. Apart from the large decrease in cognizable and non-cognizable offences, there is little in the report to call for notice. The Fire-Brigade did good work, and it is satisfactory to notice that there was no loss of life by fire during the year. The finger-impressions of 1,971 persons charged with offences against property were taken during the year, with the result that in no less than 763 cases the men concerned were identified in the office of the Inspector-General of Police.

5. There were 62 false cases in the Town against 44 in 1900, and 20 in the Suburbs against 29 in 1900. It appears that of the five prosecutions for bringing a false charge decided in the Town, in four a sentence of fine only was passed. The Lieutenant-Governor regrets to find that his remarks last year on the desirability of imposing a deterrent sentence, which a fine can often not be, in such cases have been so disregarded, and trusts he will not have occasion again to call attention to this matter.

6. There has been an increase from 2,979 to 3,321 in the number of fire-arms, rifles, guns and pistols imported, and from 782 to 838 in the number of weapons purchased in India by dealers. During the present year restrictions have, however, been imposed on the importation of rifles, and of Government bore ammunition, as also on the sale and possession of European revolvers and magazine pistols.

ORDER.—Ordered that a copy of this Resolution be forwarded to the Commissioner of Police, Calcutta, for information, and for communication to the Presidency Magistrates.

Ordered that a copy of this Resolution be forwarded to the Commissioner of the Presidency Division, the Chairman of the Corporation of Calcutta, and the Municipal Department of this Government, for information.

Ordered, also, that a copy of the Resolution be published in the *Calcutta Gazette*.

By order of the Lieutenant-Governor of Bengal,

C. E. BUCKLAND,

Chief Secy. to the Govt. of Bengal.

WEATHER AND CROP REPORT.

For the week ending on the 28th July 1902.

Burdwan.—Rainfall at Sadar 2·17, Kalna 1·42, Katwa 5·71, Raniganj 1·73. Weather cloudy with occasional showers. Transplantation going on. Fodder and water sufficient. Condition of cattle good. Common rice sells at 12 seers per rupee.

Birbhum.—Rainfall at Sadar 2·37, Rampur Hât 4·16. Weather cloudy and rainy. Transplantation going on. Sugarcane promising. Fodder and water sufficient. Common rice sells at 12 seers per rupee.

Bankura.—Rainfall at Sadar 5·77, Vishnupur 2·60. Transplantation of paddy going on. More rain is wanted. Sugarcane promising well. No cattle-disease. Fodder and water sufficient everywhere. Common rice sells at 12¼ seers per rupee.

Midnapore.—Rainfall at Sadar 3·24, Contai 3·32, Tamluk 6·20, Ghatal 5·25. Weather rainy. Transplantation of *aman* going on. Sugarcane doing well. Fodder and water sufficient. State of bombyx mori fair at Ghatal. Cattle pox reported from thana Binpur. Common rice sells as follows:—

	Srs.	ch.	
Sadar	12	8	per rupee.
Contai	12	0	
Tamluk	11	12	
Ghatal	12	0	

Hooghly.—Rainfall at Sadar 3·39, Serampore 2·72, Arambagh 2·97. More rain wanted. State of standing crops good. Common rice sells as follows:—

	Srs.	ch.	
Sadar	10	0	per rupee.
Serampore	10	10	
Arambagh	12	1½	

Howrah.—Rainfall at Sadar 4·27, Ulubaria 3·78. Fall general. No more rain wanted for some time. Agricultural prospects fair except in the lowlying lands within the jurisdiction of thana Jagatballavpur and the Ampta basin which have been submerged, and where the crops are under water, and the seedlings are too short to be transplantated. No cattle-disease. Common rice sells at 10½ seers at Sadar and at 11 seers at Ulubaria.

24-Parganas.—Rainfall at Sadar 4·78, Barasat 3·11, Basirhat 1·18, Diamond Harbour 2·66. Frequent rain, good monsoon weather. State of standing crops good. Prospect fair. More rain wanted in all subdivisions. Transplantation going on. Common rice sells at 11 seers per rupee. A few cases of cattle-disease reported from thana Basirhat. Supply of fodder and water sufficient.

Nadia.—Rainfall at Sadar 2·22, Ranaghat 3·10, Chuadanga 1·89, Meherpur 2·43, Kushtia 1·53. Weather rainy. Prospects of standing crops good. Transplantation of *aman* seedlings going on. Fodder and drinking water sufficient. No cattle-disease reported. Common rice sells as follows:—

	Srs.	ch.	
Sadar	12	0	per rupee.
Ranaghat	11	0	
Chuadanga	11	0	
Meherpur	10	8	
Kushtia	11	4	

Murshidabad.—Rainfall at Sadar 3·13, Kandi 2·31, Jangipur 5·01, Lalbagh 0·05. Weather seasonable. Transplantation of *aman* seedlings going on. Prospects of jute, sugarcane and *bhadoi* good. No cattle-disease. Fodder and water sufficient. Common rice sells as follows:—

	Srs.	ch.	
Sadar	10	12	per rupee.
Kandi	12	0	
Jangipur	11	8	
Lalbagh	10	0	

Jessore.—Rainfall at Sadar 5·34, Jhenida 1·36, Magura 0·89, Bangaon 3·12, Narail report not received. Weather seasonable. More rain wanted. Prospects of crops generally fair to good. Fodder and water sufficient. Cattle-disease reported from one village in Magura subdivision and from Kotwali thana. Common rice sells at 12 seers per rupee.

Khulna.—Rainfall at Sadar 2·51, Bagerhat 2·76, Satkhira 0·52. Weather seasonable. Transplantation of *aman* continues. *Aus* harvesting commenced. Fodder and water sufficient. Cattle-disease reported from Paikgachha, Fakirhat and Asasuni. Common rice sells as follows:—

	Srs.	ch.	
Sadar	11	8	per rupee.
Bagerhat	12	8	
Satkhira	10	8	

Rajshahi.—Rainfall at Sadar 2·96, Nator 3·11, Naugaon 5·40. Transplantation of winter rice and harvesting of *aus* and jute continues. Prospects of standing crop good. Weather seasonable. Common rice sells at 12 seers per rupee.

Dinajpur.—Rainfall at Sadar 5·04. Fall in the district general, varying from 1·57 to 10·17. Weather seasonable. Standing crops good. Transplantation of winter rice is progressing. No cattle-disease. Fodder and drinking-water plentiful. Rice selling at 12 seers per rupee.

Jalpaiguri.—Rainfall at Sadar 7·13, Alipore Duars 8·55. Fall general. Weather hot and cloudy with occasional showers. Transplantation of *haimanti* and harvesting of *bhadoi* paddy going on. Prospects favourable. Common rice sells at 11 seers a rupee. Fodder and water sufficient.

Darjeeling.—Rainfall at Sadar 11·08, Kurseong 9·11, Siliguri 8·46. Weather seasonable. *Hills*—*Haimanti dhan* being cultivated. Maize, *chota marua* and *bhadoi dhan* doing well. *Terai*—Transplanting of *haimanti* paddy going on. Prospects good. Coarse rice sells as follows:—

	Srs.	ch.	
Hills	8	0	per rupee.
Terai	11	0	

Maize sells at Darjeeling at 16 seers and at Kalimpong at 18 seers per rupee.

Rangpur.—Rainfall at Sadar 2·32. Fall general. Weather cloudy and rainy. Cutting of *aus* and jute and transplantation of *aman* going on low lands. Jute a little damaged in Nilphamari by rain and insects. Cattle-disease still prevails in Gaibanda. Common rice sells at 11 seers per rupee.

Bogra.—Rainfall at Sadar 7·13. Fall general. Weather hot and cloudy. Cutting of *aus* and jute and transplantation of *aman* going on in places. Prospects good. Fodder and water sufficient. Common rice sells at 12 seers per rupee.

Pabna.—Rainfall at Sadar 1·01, Sirajganj 3·09. Fall general. Weather rainy and hot. *Aus* paddy and jute are being harvested. Prospects of standing crops fair. Fodder and water sufficient. No cattle-disease. Common rice sells at 10 seers per rupee.

Dacca.—Rainfall at Sadar 1·34, Manikganj 1·95, Munshiganj 3·86, Narayanganj 3·19. Prospects of crops fair. Weather seasonable. Fodder available. No cattle-disease. Common rice sells at 11 seers per rupee.

Mymensingh.—Rainfall at Sadar 2·68, Jamalpur 4·84, Kishorganj 4·70, Netrokona 3·77, Tangail 1·05. Weather seasonable. *Aus* and jute are being harvested. They have suffered from excessive rain. Transplantation of winter rice going on. Fodder and water sufficient. No cattle-disease. Common rice selling as follows:—

	Srs.	ch.	
Sadar	10	0	per rupee.
Kishorganj	11	2	
Jamalpur	12	0	
Netrokona	12	3	
Tangail	10	4	

Faridpur.—Rainfall at Sadar 2·81, Goalundo 4·08, Madaripur 6·39. Weather seasonable. Harvesting of *aus* paddy continues. Prospects of *aman* paddy fair. Common rice sells at 11 seers a rupee. Fodder sufficient. No cattle-disease.

Backergunge.—Rainfall at Sadar 5·53. Fall general, lightest at Pirojpur, 1·31. Weather seasonable. Transplantation of *aman* going on. Cattle-disease at Matbari and Berhanaddi thanas. Fodder and water sufficient. Common rice sells at 11 seers per rupee.

Tippera.—Rainfall at Sadar 1·77, Brahmanbaria 3·24. Weather seasonable. Prospects not good in Sadar. Harvesting of *aus* paddy and jute continues. Fodder and water sufficient. No cattle-disease. Common rice sells at 12 seers. No report from Chandpur.

Noakhali.—Rainfall at Sadar 7·65, Feni 11·27. Fall general. Weather seasonable. Transplantation of *aman* continues. Prospects of *aus* fair. Cattle-disease reported from two thanas. Fodder and water sufficient. Common rice sells at Sadar at 11 seers and at Feni at 12 seers per rupee.

Chittagong.—Rainfall at Sadar 9·99, Cox's Bazar 14·74. *Aman dhan* is being sown. Cattle-disease prevalent in parts of the district. Fodder and water sufficient. Common rice sells at 12 seers 10 chitaks per rupee.

Chittagong Hill Tracts.—Rainfall at Sadar 3·55. Fall general. Weather cool and showery. Winter rice sowing continues. More sunshine is wanted for the *jhum* crops. No fresh cases of cattle-disease in Mahalcherri reported. Common rice sells at 11 seers per rupee.

Patna.—Rainfall at Sadar 4·40, Barh 2·30, Bihar 6·47, Dinapore 4·47, Hilsa 5·5, Bikram 2·85. Weather cloudy. More rain needed. Sowing of Indian-corn nearly completed. Transplantation of paddy will soon commence. No cattle-disease. Fodder and water sufficient. Common rice sells as follows:—

	Srs.	ch.	
Patna	11	4	per rupee.
Barh	11	4	
Bihar	10	0	
Dinapore	11	8	

Gaya.—Rainfall at Sadar 7·49, Jahanabad 5·26, Aurangabad 6·41, Nawadah 2·64. Weather rainy. Transplantation of *marua* almost over. Paddy seedling doing well. No cattle-disease. Fodder and water for cattle ample. Average price of common rice 11¾ seers per rupee.

Shahabad.—Rainfall at Sadar 4·63, Buxar 4·90, Bhabhua 7·57, Sasaram 7·68, Dehri 3·20. Weather seasonable. *Bhadoi* and paddy doing well. Fodder and water sufficient. Sugarcane good. No cattle-disease. Rice sells at Sadar at 11 seers a rupee.

Saran.—Rainfall at Sadar 1·90, Siwan 2·14. Gopalganj 4·03. Weather cloudy and rainy. Rainfall has been general and has proved most beneficial to agricultural operations. Transplantation of paddy in progress. Fodder and water sufficient. No cattle-disease. Common rice sells at Sadar at 11 seers per rupee.

Champaran.—Rainfall at Sadar 7·19, Bettiah 2·83. Weather rainy and cloudy. Transplantation of *aghani* paddy and weeding of *bhadoi* crops going on. Prospects good. Cattle-disease reported. Fodder and water sufficient. Common rice sells at 12¼ seers and maize at 22½ seers per rupee.

Muzaffarpur.—Rainfall at Sadar 7·14, Hajipur 5·15, Sitamarhi 7·93. Weather cloudy and rainy. Rainfall general. Sowing of *bhadoi* crops finished. Transplantation of paddy in progress. Prospects excellent. Fodder and water sufficient. Very few cases of cattle-disease in Sitamarhi subdivision. Prices are—Common rice 11¼ and maize 19 seers a rupee.

Darbhanga.—Rainfall general. Transplantation of paddy in progress. Prospects of standing crops good. Sugarcane doing well. Fodder and water sufficient. Cattle-disease is reported from Warisnagar and Phulparas thanas. Weather hot and cloudy. Common rice sells at 12 seers in Sadar and subdivisions.

Monghyr.—Rainfall at Sadar 4·16, Begusarai 1·34, Jamui 3·43. Weather seasonable. *Bhadoi* and paddy sowings going on. Weeding still continues. Transplantation of *marua* and paddy in progress. Standing crops promising. Sugarcane doing well. Fodder and water sufficient. A few cases of cattle-disease reported from Begusarai thana. Common rice sells at 11 seers 2 chitaks per rupee.

Bhagalpur.—Rainfall at Sadar 6·04, Banka 3·02, Madhipura 6·50, Supaul 4·26. Weather windy and cloudy with rain. Prospects of *aghani* and *bhadoi* good, but more rain is wanted to help transplantation. Transplantation of winter crops going on. Recent rain falls have done immense good. Sporadic cases of cattle-disease reported. Fodder and water sufficient. Common rice sells as follows:—

	Srs.	ch.	
Sadar	11	6	per rupee.
Banka	11	14	
Madhipura	13	0	
Supaul	13	0	

Purnea.—Rainfall at Sadar 3·08, Kishanganj 8·51, Araria 3·98. Weather cloudy and rainy. Fall general. Jute and *bhadoi* doing well. Transplantation of *aghani* crops going on. Cattle-disease reported from Palasi outpost. Fodder and water sufficient. Common rice sells as follows:—

	Srs.	ch.	
Sadar	9	0	per rupee.
Kishanganj	11	0	
Araria	12	0	

Malda.—Rainfall at Sadar 1·66, Chanchal 3·14, Sibganj 3·52, Gojal 1·98. Fall general. Weather hot and cloudy. Harvesting of *bhadoi* continues. Transplantation of winter rice going on. No cattle-disease. Fodder and water sufficient. Common rice sells at 11 seers per rupee.

Southal Parganas.—Rainfall at Sadar 2·73, Deoghur 3·76, Jamtara 6·76, Pakaur 3·31, Rajmahal 5·67. Weather cloudy with occasional showers. Transplantation of winter rice in progress. Prospects of Indian-corn and sugarcane favourable. Fodder and water sufficient. Common rice sells at 11¾ seers in Sadar. No cattle-disease. Godda report not received.

Cuttack.—Rainfall at Sadar 7·76. Fall general, but smaller in all other parts. Weather of usual monsoon character. Harrowing of *beali* and reploughing and transplantation of *sarad* in progress. Prospects generally good. Slight cattle-disease in some parts. Fodder available except in parts submerged by flood water. Common rice sells at 13 seers 2 chitaks at Sadar.

Balasore.—Rainfall at Sadar 5·97. Fall general and beneficial to crops. Puddling, weeding and transplantation progressing. Prospects good. Sugarcane, jute and oilseeds doing well. Rice sells at 13 and 15 seers at Sadar and Bhadrak respectively. Fodder and water sufficient. Burabalang and Subarnarekha rivers in flood.

Angul.—Rainfall at Sadar 5·83, Chhendipada 4·06, Bissipara 4.40. Fall general. Weather cloudy. Transplantation and puddling of paddy in progress. Common rice sells at 12 and 15 seers per rupee at Sader and interior respectively.

Puri.—Rainfall 1·71. Weather seasonable. Rainfall general throughout the district, has done good to the standing crops. Puddling and weeding in progress. Transplantation of paddy and *mandia* seedlings has commenced. Sugarcane and other miscellaneous crops doing well. Fodder and water-supply sufficient. Common rice sells at 13 seers 2 chitaks per rupee. Cattle-disease prevailing at places.

Hazaribagh.—Rainfall at Sadar 5·64, Giridih 7·31. Fall general. Weather seasonable. Transplanting of paddy commenced. Sugarcane doing well. Fodder and water sufficient. Common rice sells at 11¼ seers per rupee.

Ranchi.—Rainfall at Sadar 4·39. Fall general and beneficial to crops Transplantation of winter rice begun in places. Cattle-disease reported from Ranchi, Silli and Lohardaga thanas. Fodder and water sufficient. Common rice sells at 13 seers per rupee.

Palamau.—Rainfall at Sadar 2·40. Weather cloudy. Rainfall general. *Murua* is being transplanted throughout the district. Maize and sugarcane are doing well. Fodder and water sufficient. Price of common rice at Sadar is 10 seers 6 chitaks per rupee.

Manbhum.—Rainfall at Sadar 1·63, Gobindpur 2 27. Weather seasonable. Prospects of crops good. Transplantation of winter rice in full swing Fodder and water sufficient. Cattle-disease not reported. Average price of common rice is at Sadar 12 seers and at Gobindpur 11 seers per rupee.

Singhbhum.—Rainfall 5·06. Weather seasonable. Transplantation going on vigorously. Young paddy promising well. Average price of rice is 12 seers per rupee.

General Summary.—Prospects much improved by the rainfall of the week which was general and moderately heavy. More rain is wanted in the districts of Bankura, Hooghly, 24 Parganas, Jessore, Patna and Bhagalpur; the transplantation of winter rice is proceeding. *Autumn* crops and sugarcane are promising. Early rice and jute being harvested. Cattle-disease reported from a few districts. Fodder and water sufficient. The price of common rice has risen in 9 districts, fallen in 9, and is stationary in the rest.

By order of the Lieutenant-Governor of Bengal,

W. C. MACPHERSON,
Offg. Secretary to the Govt. of Bengal,

REVENUE DEPARTMENT,
The 29th July 1902.

No I

Imports of Principal Articles into Calcutta by Rail, Road, River,

Whence imported	Food-grains								Fibrous products		Oilseeds	
	Rice and paddy			Wheat	Wheat flour	Gram and pulse	Other food-grains	Total	Jute, raw	Gunny-bags	Linseed	Mustard seed
	Rice	Paddy*	Total (in rice)									
Bengal	Mds	Mds	Mds	Mds	Mds	Mds	Mds	Mds	Mds	No	Mds	Mds
Burdwan	60,484	41,615	80,493	1,471		3,681	8	91,653		53,240	5,568	335
Birbhum	77,601	686	78,030	393		745		79,168		5,215		
Midnapore	313,412	12,576	321,272	145		2,037	6	323,460	1,746	20,410	6,121	448
Hooghly	207,448	22,466	221,489	2,383	10	11,060	81	235,027	30,247	1,255,563	5,470	5,741
24-Parganas	550,512	30,252	576,032		44	3,256		578,332	34,246	2,362,841	6 230	398
Nadia	6,506	2,870	8 305	75,710	1,536	445,785	5,204	536,540	10,645	21,585	109,218	1,733
Murshidabad	1,550		1,550	12,475		26,920	1,103	42,048	4,207	315	7,200	3,537
Jessore	3,008	4,075	5,535	5,250		13,005		23,810	38,801	1,085	12,851	5,097
Khulna	1,809	3,475	4,041			200		4,241	529	210	123	
Rajshahi	2	1	3	3,868		13,351		17,222	29,235	840	22,221	4,067
Dinajpur	5,428		5,428			22		5,450	6,923	123,205		2 039
Jalpaiguri	123		123					123	63,688	41,685		1,179
Darjeeling	509		509					509	5,105	10,990		
Rangpur				1,525				1,525	252,556	4,080	2,836	20,395
Bogra	1,909		1,909			256	240	2,405	32,540	2,345	2,658	8,186
Pabna	3	3	5	194		4,387		4,586	471,840	16,040	10,054	23,771
Cooch Behar						104		104	13,452	85		633
Dacca	212		212	168		236		616	1,001,451	9,305	8,870	18,007
Mymensingh						139		139	232,709	1,995	2,842	33,257
Faridpur	2,556	487	2,860	10,794	9,434	29,532		52,620	139,797	7,280	48,202	28,751
Backergunge	188,293	800	188,792					188,792	2,138	3,450	302	
Tippera	61		61					61	29,313	605	6,007	84
Noakhali	1,550		1,550					1,550	1,107	350	6,539	
Chittagong	4		4					4		1,925		
Total Bengal	1,423,039	128,295	1,503,221	114,375	11,030	554,715	6,642	2,189,985	2,391,541	3,975,303	390,096	156,058
Bihar												
Patna	7		7			75,344	743	76,094		910	82,085	36,276
Gaya	39		39			946		985		1,280	80,904	1,019
Shahabad						28,383	673	29,056		735	54 778	674
Saran	11		11			3,817	1,445	5,273			10,008	8,213
Champaran						45		45		3,990	61,517	9,499
Muzaffarpur	9		9			11,569	6	11,584		840	63,702	18,485
Darbhanga	6		6			9,370		9,376		2,555	70,455	48,520
Monghyr				1,094		95,283	1,300	97,766		35	73,341	77,370
Bhagalpur	47		47	13,923		9,220	733	23,929	2,120	475	27,891	87,448
Purnea				693		73		766	25,084	5,490	3,733	78,284
Malda	6		6	2,603		7,051	733	10,393	463	700	1,704	125
Sonthal Parganas	20		20	74,303		31,164	798	106,285	322	805	9,379	72,897
Total Bihar	145		145	92,606		272,271	6,530	371,552	27,989	17,405	541,497	438,805
Orissa												
Cuttack	4,772		4,772			43,355		48,127	75	105	30	904
Balasore	154,785	8,078	159,834	178		11,021		171,633	7,539	2,935	1,618	205
Puri	7,356		7,356			893		8,249				
Total Orissa	166,913	8,078	171,962	178		55,269		228,009	7,614	3,040	1,648	1,109
Chota Nagpur												
Hazaribagh	28		28					28		700	431	
Manbhum										280		
Singhbhum	1,751		1,751			63		1,814		700	1,938	319
Total Chota Nagpur	1,779		1,779			63		1,842		1,680	2,369	319
Total from the Provinces under the Lieutenant-Governor of Bengal	1,591,876	136,373	1,677,109	207,159	11,030	882,918	13,172	2,791,388	2,427,144	3,997,488	905,810	596,991
Other Provinces and Places												
Burma	284,856	223,289	424,411			5,650		430,061		800		8
Assam	8,198		8,198			12		8,210	20,104	2,590	51,348	94,630
U. P. of Agra and Oudh.	11		11	659,742	2,583	392,509	1,013	1,055,858	404	11,900	912,208	430,418
Panjab	61		61	5,765		3,808		9,634				14,807
Central Provinces	7,683		7,683	3,753	1	254		11,691		455	8,833	11,091
Rajputana and Central India.						2,495		2,495	20		723	2,370
Bombay						7,801		7,801				
Madras	6,164		6,164			71,586		77,750				
Total 1902	1,898,849	359,662	2,123,637	876,409	13,614	1,307,033	14,185	4,394 878	2,447,678	4,013 233	1,877,42	1,159,194
Total 1901	1,653,597	705,577	1,897,807	670,514	7,...3	920,153	94,125	3,598,842	1,326,055	2,744 011	1,9 3,10,	1,113,178
Total 1900	2,380,150	491,469	2,687,317	477,904	436	979,154	81,193	4,226,008	611,102	5,312,390	2,1 1,45..	741,678

* One maund of paddy is equivalent to 25 seers of rice

Canal, and Sea (coastwise) in the months of April and May 1902

Tea, Indian	Cotton, raw	Silk, raw	Coal and coke	Indigo	Sugar		Tobacco		Whence imported
					Refined	Unrefined	Unmanufactured	Manufactured	
Mds	Mds	Mds	Mds	Mds	Mds	Mds	Mds	Mds	
									BENGAL
	12	..	6,799,806			16	327	.. ..	Burdwan
		115				21	74	..	Birbhum
	1,144	364	22,653			8,985	221	.	Midnapore
	36		8,420		334	19,298	10,885	1,945	Hooghly
1	8,718		11,930		1,422	50,412	5,732	1,126	24-Parganas
	971	..	250	..	2	2,072	5,039		Nadia
		1,402				20	112	.	Murshidabad
	791					15,298	3,036		Jessore
						22,725			Khulna
	31	709							Rajshahi
						1			Dinajpur
5,477							10,915		Jalpaiguri
15,653							254	1	Darjeeling
	15,637					22	33,400		Rangpur
	229						11		Bogra
									Pabna
	7,718						734		Cooch Behar
	80								Dacca
	711								Mymensingh
	92					300	10		Faridpur
									Backergunge
									Tipperá
173	5,704								Noakhali
									Chittagong
21,304	41,874	2,650	6,843,059		1,758	119,170	70,739	3,072	Total Bengal
									BIHAR
	1,166			..		3,033	1,098	2,281	Patna
	31					557	..	575	Gaya
						4,396	305		Shahabad
						1,010	16		Saran
				388					Champaran
2				3		8	1,559		Muzaffarpur
						1,147	1,336		Darbhanga
	97						5	5	Monghyr
				2					Bhagalpur
				3			23,616		Purnea
	9								Malda
	51		560					231	Sonthal Parganas
2	1,354	..	560	396		10,151	27,933	3,095	Total Bihar
									ORISSA
							41		Cuttack
	197						45		Balasore
									Puri
	197			..			86		Total Orissa
									CHOTA NAGPUR
			308,364						Hazaribagh
123			2,783,137	86					Manbhum
	41						4		Singhbhum
123	41		3,091,501	86			4		Total Chota Nagpur
21,429	43,466	2,650	9,935,120	482	1,758	129,321	98,764	6,167	Total from the Provinces under the Lieutenant-Governor of Bengal
									OTHER PROVINCES AND PLACES
	4,883			4			408	35	Burma
20,128	8,850	223	50,859						Assam
123	94,771			13		1,207	771	2	United Provinces of Agra and Oudh
141	15,980						20		Panjab
	4,600	.. ..	4				3		Central Provinces
	13,950								Rajputana and Central India
	974	3			2,141	..	10	42	Bombay
	1,458				6,889		102	285	Madras
41,821	188,332	2,876	9,935,983	499	10,788	130,528	100,163	6,591	1902
25,990	118,778	1,856	10,852,785	278	26,388	138,577	138,530	5,612	1901 } Total
36,402	55,345	2,529	11,078,082	340	15,103	121,507	104,144	6,775	1900

No II

Statement of the Routes by which the Articles enumerated in table No I were imported into Calcutta in the months of April and May 1902

Routes		Food-grains						Fibrous products		Oilseeds	
		Rice	Paddy	Wheat	Wheat flour	Gram and pulse	Other food-grains	Jute, raw	Gunny-bags	Linseed	Mustard seed
		Mds	Mds	Mds	Mds	Mds	Mds	Mds	No	Mds	Mds
By boats		762,155	54,783	66,388	.....	152,304	1,557	285,152	3,194,003	83,074	24,452
,, river steamers ...		12,385	1,140	2,580	14	6,734	601	1,218,871	34,160	60,075	144,807
,, rail	E. I. Railway	138,749	35,079	770,508	2,591	695,330	8,654	128,409	93,275	1,461,022	885,141
	E. B. S. Railway	116,081	4	36,751	10,964	364,535	3,367	740,269	611,450	246,034	88,526
	Assam-Bengal Railway	61	.....	.....	.....	.....	.....	.....	2,975	5,713	1,684
	Bengal-Nagpur Railway	186,465	11,278	182	1	94,153	6	160	6,160	12,556	14,549
	Bengal Central Railway	1,318	.....	.....	.....	1,674	.....	28,922	1,260	6,914	47
,, road		334,308	31,222	.....	44	4,361	.....	38,415	66,950	3,118	.....
,, sea		347,329	226,156	.....	.....	47,933	.....	7,480	3,000	616	8
Total ...	1902 ...	1,838,849	359,662	876,409	13,614	1,367,033	14,185	2,447,678	4,013,233	1,870,422	1,159,194
	1901 ...	1,653,597	705,577	670,514	7,243	929,153	94,125	1,326,055	2,744,011	1,903,197	1,113,172
	1900 ...	2,380,150	491,469	477,904	435	979,154	81,193	611,162	5,312,380	2,301,453	741,678

Routes		Tea, Indian	Cotton, raw	Silk, raw	Coal and Coke	Indigo	Sugar		Tobacco	
							Refined	Unrefined	Unmanufactured	Manufactured
		Mds	Mds	Mds	Mds	Mds	Mds	Mds	Mds	Mds
By boats		.....	5,422	201	18,073	.....	1,758	52,098	12,109	2,968
,, river steamers ...		13,082	30,111	163	50,859	.....	.....	335	538	646
,, rail	E. I. Railway	389	125,460	1,577	9,891,867	493	.....	11,552	10,293	954
	E. B. S. Railway	25,244	4,108	865	.....	.....	.....	2,749	64,494	1
	Assam-Bengal Railway	2,933	.....	07	.....	.....	.....	.....	.....	.....
	Bengal-Nagpur Railway	.....	5,058	.....	11,385	.....	207	.....	45	.....
	Bengal Central Railway	.....	984	.....	.....	.....	.....	15,874	135	.....
,, road		.....	4,170	.....	13,800	.....	.....	47,920	11,909	1,600
,, sea		173	13,019	3	.....	4	8,823	.....	645	423
Total ...	1902 ...	41,821	188,332	2,876	9,985,083	499	10,788	130,528	100,168	6,591
	1901 ...	25,990	118,778	1,856	10,852,785	278	26,388	138,577	138,550	5,642
	1900 ...	36,402	55,345	2,529	11,078,083	346	15,163	121,507	104,144	6,775

No. III

Imports of certain Articles into Calcutta by Sea (Foreign and Coastwise) in the months of April and May 1902

	Cotton piece-goods		Cotton yarn		Salt	Kerosene oil
	European	Indian	European	Indian		
	Rs	Rs	Mds	Mds	Mds	Mds
From Foreign Countries—						
United Kingdom	2,70,73,589	.....	17,040	.....	715,017	282
Other countries	10,63,614	.....	1,185	.....	729,160	567,505
Total ...	2,81,37,196	.....	18,225	.....	1,444,177	567,787
Coastwise—						
Bombay	30,301	4,06,677	.....	32,140	173,274	.....
Sind	6,375	.....	.....	.....	.....	.....
Madras	47,803	47,400	.....	.....	.....	.....
Other ports in Madras	300	.....	.....	.....	.....	.....
Burma	70,489	.....	.....	.....	.....	189,331
Karikal	34	.....	.....	.....	.....	.....
Other Ports	.....	.....	.....	12	.....	.....
Total ...	1,55,302	4,54,077	.....	32,152	173,274	189,331
Total ... 1903 ...	2,82,92,498	4,54,077	18,225	32,152	1,617,451	757,118
Total ... 1901 ...	2,23,05,451	4,14,362	29,521	32,444	1,579,758	819,783
Total ... 1900 ...	2,08,09,766	2,30,084	25,619	9,879	1,327,397	793,080

No. IV

Exports of Principal Articles from Calcutta by Sea (coastwise and to foreign countries) in the months of April and May 1902

	Rice	Paddy	Total (in rice)	Wheat	Wheat flour	Gram and pulse	Other food-grains	Total	Jute, raw	Gunny-bags
Coastwise—	Mds	Mds	Mds	Mds	Mds	Mds	Mds	Mds	Mds	No.
Bombay	44,278	.....	44,278	19,211	.....	18,608	.....	82,187	5	1,768,150
Sind	.....	.....	.....	.....	.....	.....	.....	.....	.....	705,950
Madras	20	.....	20	3,634	1,048	85,994	7,244	97,940	.....	223,700
Other ports in Madras ...	41,764	.....	41,764	381	1,907	8,519	.....	52,571	.....	349,500
Burma	5,734	.....	5,734	2,315	20,514	38,709	2,308	69,580	75	5,017,800
Pondichery ...	.....	.....	.....	.....	343	838	.....	1,181	.....	17,500
Allepey ...	680	.....	680	.....	.....	.....	.....	680	28	.....
Other Indian ports	4	.....	4	359	1,537	4,459	10	6,369	.....	79,060
Total ...	92,480	.....	92,490	25,900	25,349	157,217	9,562	310,508	108	8,160,660
To Foreign countries—										
United Kingdom	125,721	.....	125,721	331,787	.....	403,977	.....	861,485	677,553	6,282,050
Other countries	1,133,833	5	1,133,836	8,608	18,547	84,491	10,902	1,265,444	1,261,138	38,797,525
Total ...	1,259,554	5	1,259,557	340,395	18,547	488,468	10,902	2,126,929	1,938,670	45,079,575
Total ... 1902 ...	1,352,034	5	1,352,037	366,295	43,896	645,685	20,524	2,437,437	1,938,784	53,240,235
Total ... 1901 ...	1,280,898	5	1,280,898	14,099	57,817	234,859	19,248	1,606,921	1,375,651	25,105,594
Total ... 1900 ...	2,046,538	118,167	3,020,301	65,363	32,527	443,752	10,040	3,578,073	909,914	41,714,902

	Linseed	Mustard seed	Tea, Indian	Cotton, raw	Silk, raw	Coal and coke	Indigo	Sugar		Tobacco	
								Refined	Unrefined	Unmanufactured	Manufactured
Coastwise—	Mds	Mds	Mds	Mds	Mds	Mds	Mds	Mds	Mds	Mds	Mds
Bombay	.....	2,645	3,807	.....	.....	4,153,294	.....	430	.....	.....	36
Sind	.....	.....	65	.....	.....	654,068	.....	.....	.....	.....	63
Madras	10	99	80	.....	35	593,880	8	141	.....	.....	9
Other ports in Madras ...	.....	6,091	2	.....	.....	422,159	.....	42	.. ..	2	92
Burma	61	10	556	147	26	1,820,840	4	1,854	1,390	7,066	591
Pondichery ...	.....	.....	.....	.....	.....	.....	.....	.....	.....	.....	.. ..
Allepey ...	.....	.....	.....	.....	.....	.....	.....	.....	.....	.....	.....
Other Indian ports	.....	.....	.....	.....	.....	94,787	.....	5,733	982	1,910	107
Total ...	71	8,845	4,510	147	61	7,730,058	12	8,200	2,372	9,878	898
To Foreign countries—											
United Kingdom	1,361,524	121,073	36,244	3,901	1,011	.....	2,042	.....	.....	.....	155
Other countries	685,242	309,937	4,439	98,180	2,387	2,514,489	1,561	819	14	6,864	308
Total ...	2,046,766	431,010	40,683	102,081	3,398	2,514,489	3,603	819	14	6,864	463
Total ... 1902 ...	2,046,837	440,455	45,193	102,228	3,459	10,253,547	3,615	9,019	2,386	16,742	1,359
Total ... 1901 ...	1,891,326	7,498	29,688	65,183	2 553	9,081,904	2,200	6,158	3,120	23,125	1,521
Total ... 1900 ...	2,292,995	15,463	35,298	48,434	2,476	7,076,008	2,088	5,019	3,503	15,870	1,213

No. V

Exports of certain Articles from Calcutta by Rail, Road, River, Canal, and Sea (coastwise) in the months of April and May 1902

Whither exported	Cotton piece-goods		Cotton yarn		Salt	Kerosene oil		Gunny-bags
	European	Indian	European	Indian		From Calcutta	From Budge-Budge*	
Bengal	Rs	Rs	Mds	Mds	Mds	Mds	Mds	No
Burdwan	4,19,341		294	2,083	64,873	317	26,070	134,948
Birbhum	3,07,710	183	173	2,321	37,489	64	9,714	87,955
Midnapore	4,50,869	8,675	2,113	1,568	34,772	315	4,027	46 340
Hooghly	2 02,149	6,912	493	78	10,286	2,4 8	7,215	23,931
24-Parganas	5,80,093	13,227	1,506	... .	29,556	14,568	6,428	55,700
Calcutta	.. ...	.. ..	.....		.. ...	.	129,879	...
Nadia	5 40 996	.....	3,799	249	50,270	2,060	16,326	345,541
Murshidabad	1,76,343	730	75	299	19,126	28	7,795	111,125
Jessore	61,978	.	779	... ..	34,304	6,367	1 446	15,500
Khulna	26,725		58	...	4,486	608		325
Rajshahi	2,93,134	...	265	37	29,536	28	3,799	75 390
Dinajpur	2,63,492	109	17	572	22,136	246	7,062	38,990
Jalpaiguri	1,75,8 0	694	89	730	23,353	363	8,765	18,060
Darjeeling	1,73,453	1,606	...	509	13,142	111	4,419	8,170
Rangpur	4,98,966	.	528	496	54,033	139	14,0 8	50,190
Bogra	2,86,406	548	2 2	131	28,869	1	5,640	26,460
Pabna	2,51,452	..	944	181	46,083	98	22,671	72,955
Cooch Behar	89,407	2,190	13	237	8,237		1,313	700
Dacca	7,39,837	255	4,644	146	108,237	521	30,050	38,255
Mymensingh	3,87,714		282	364	35,904	83	5,247	39,955
Faridpur	2,86,222	73	3,071	101	30,700	9 528	2,789	79,170
Backergunge	4,34,083	.. .	3,521	.....	84,710	3,480	6,228	37,765
Tippera	1,80,002	.. ...	1,738	88	8,505	14	2,590	28,178
Noakhali	1,24 679	.. ...	1,0 8	.....	3,258	1	.....	4,620
Chittagong	1,59,389	.. ..	982	. ...	2		106	18,485
Total Bengal	71,29,994	35,882	26,563	10,180	790,732	47,442	323,514	1,357,775
Bihar								
Patna	,27 008	156	408	783	17,870	128	32,404	303,030
Gaya	4 69,995	10,537	..	1,260	39,716		9,315	62,065
Shahabad	9,64,326	2,847	14	521	30,108	65	5,387	132,195
Saran	7,17,250	.....	201	491	36 026	56	6,189	23,675
Champaran	6,27,589	.....	39	723	35,640	142	7,145	58,625
Muzaffarpur	5,12,9 8	...		924	47,919	33	12,056	96,810
Darbhanga	4,97,431			1 127	28,212	105	14,550	124,530
Monghyr	5,11,1.39	183	33	1,757	30,439	119	13,268	226,975
Bhagalpur	5,89,985	1,072	171	635	44,734	31	16,070	252,460
Purnea	2,64,859	.....	91	679	34,106	51	4,893	69,195
Malda	67,247		369	176	8,311		1 947	26,565
Sonthal Parganas	3,18,313	...	633	1,327	52,670	3	16,063	223,985
Total Bihar	63,67,998	14,794	1,950	10,402	441,718	733	139,377	1,569,408
Orissa								
Cuttack	45,044	2,928	.. ..	1,571	..	1,703	3,779	17,366
Balasore	80,321	2,163	896	5,775	20,641	1,366	450	100,025
Puri	80,073	2,044	....	2,197	.....	626	... .	1,015
Total Orissa	1,56,838	7,135	896	9,543	20,641	3,695	4,229	118,400
Chota Nagpur								
Hazaribagh	1,38,840		84	921	14,033	14	3,206	1,805
Manbhum	1,74,087			1,813	47,627	96	5,046	10,570
Singhbhum	17,404	1,241		254	18,623	148	527	17,325
Total Chota Nagpur	3,30,331	1,241	84	2,988	80,283	258	8,779	29,400
Total Exports to the Provinces under the Lieutenant-Governor of Bengal	1,30,85,161	59,052	29,501	33,113	1,333,374	52 027	475,899	3,074,9 5
Other Provinces and Places								
Burma	1,74,762	16,365	337	6,135	...	295	...	5,017,880
Assam	11,00,740	611	600	2,213	102,060	1,340	15,829	135,415
U P of Agra and Oudh	9n, 8,176	40,988	2,702	348	61,781	542	74,298	2,362,660
Panjab	14,15,484	14,415	916	136	13	57	5,856	935,760
Central Provinces	99, 25	4,583	13	243	1	7,441	13,551	579,256
Rajputana and Central India	1,8 ,038	993	93	5	15	36	3,109	14,460
Berar	9,739	427	.. ..	.....	.....	.....	. ...	1,260
Nizam's Territory	5,198	1,716	.. ...		. ...	.. ..	.....	6,345
Bombay	30 732	7,490	436	. ...	.	...	.....	1,787,540
Madras	97,321	983	17	400	...	8,552	871	606,180
Alleppy	...	...	.....	.....	10	..	.....	
Mysore	4,172	.. ..	..	.	... ..	...	..	
Pondicherry	...	.. ..	.	.. .			.	17,500
Sind		. ..				..	.	705,980
Port Blair	1,400	...		.		69	..	..
Total 1902	2 69 23,017	1,47,483	34,035	42,593	1,447,853	70,359	591,713	15,342,020
Total 1901	2,87 47,207	2,58,483	32,923	44,574	1,377,047	59,147	625,318	13,869,213
Total 1900	2,17,35,364	2,21,887	29,282	33,496	1,382,670	60,505	480,795	14,567 744

* Represents the trade returned at the traffic registering stations only

No VI

Statement of the Routes by which the Articles enumerated in table No. V were exported from Calcutta in the months of April and May 1902.

		Cotton piece-goods		Cotton yarn		Salt	Kerosene Oil		Gunny-bags
		European	Indian	European	Indian		From Calcutta	From Budge-Budge	
		Rs	Rs	Mds	Mds	Mds	Mds	Mds	No
By boats		2,85,300	5,500	1,071	.....	122,296	24,023	19,074	56,700
,, river steamers		26,50,557	547	12,773	677	339,283	1,073	87,218	165,490
,, rail	East Indian Railway	1,60,51,848	63,714	5,018	17,421	667,890	1,658	291,474	4,713,925
	Eastern Bengal State Railway	37,73,918	6,387	9,192	5,809	202,562	3,424	180,927	900,760
	Assam-Bengal Railway	3,91,148	.....	2,159	488	11,939	574	160	12,075
	Bengal-Nagpur Railway	2,78,349	22,221	.....	7,111	81,066	19,782	12,166	871,270
	Bengal Central Railway	55,488	.....	810	.....	16,322	2,713	.....	1 9,310
	North-Western Railway	2,20,444	72	187	.....	.....	12	.....	599,480
	Railways under the Government Examiner of Railway Accounts, Bombay	1,92,594	14,362	127	12	.....	19	.. .	40,215
,, road		5,93,340	12,914	1,181	.....	12,772	16,864	692	10,135
,, sea		4,80,096	21,765	2,117	10,925	3,603	417	.....	8,160,660
Total	1902	2,99,33,917	1,47,453	34,635	42,893	1,497,353	70,359	691,713	15,242,020
	1901	2,41,47,207	2,28,483	32,922	44,974	1,277,647	59,147	625,318	13,669,213
	1900	2,17,25,364	2,21,687	29,282	32,696	1,362,670	60 805	480,795	14,567,744

July 29, 1902

J. E. O'Conor,
Director-General of Statistics

W. C. Macpherson,
Offg. Secretary to the Government of Bengal

Vital Statistics of Towns in Bengal with a population of 20,000 and over during the month of May 1902.

Districts.	Towns.	Population under registration.	BIRTHS.		DEATHS.																AVERAGE OF CORRESPONDING MONTH OF PREVIOUS FIVE YEARS.		Remarks.
					CHOLERA.		SMALL-POX.		PLAGUE.		FEVER.		DYSENTERY AND DIARRHŒA.		RESPIRATORY DISEASES.		INJURY.		OTHER CAUSES.		TOTAL OF ALL CAUSES.				
			Number registered.	Ratio per 1,000 of population per annum.	Number registered.	Ratio per 1,000 of population per annum.	Number registered.	Ratio per 1,000 of population per annum.	Number registered.	Ratio per 1,000 of population per annum.	Number registered.	Ratio per 1,000 of population per annum.	Number registered.	Ratio per 1,000 of population per annum.	Number registered.	Ratio per 1,000 of population per annum.	Number registered.	Ratio per 1,000 of population per annum.	Number registered.	Ratio per 1,000 of population per annum.	Number registered.	Ratio per 1,000 of population per annum.	Number registered.	Ratio per 1,000 of population per annum.	
1	2	3	4	5	6	7	8	9	10	11	12	13	14	15	16	17	18	19	20	21	22	23	24	25	26
Burdwan	1. Burdwan	35,022	59	20·16	5	1·68	...	...	...	...	57	19·44	7	2·23	...	...	3	·96	10	3·36	82	28 08	72	24·60	
Bankura	2. Bankura	20,737	36	20·76	9	5·16	20	11·52	...	...	9	5·16	...	...	...	...	1	·48	17	9·79	56	32 40	31	17 88	
Midnapore	3. Midnapore	23,140	92	33·24	1	·36	18	6·48	...	...	53	18·72	14	5·04	2	·72	...	...	20	7·20	107	38·64	88	31·80	
Hooghly	4. Hooghly and Chinsura	29,383	63	21·60	13	5·28	1	·36	...	...	45	18·36	16	6·48	2	·72	3	1·20	29	11·76	109	44·40	125	51·00	
	5. Serampore	44,451	73	19·68	13	3·48	6	1·56	...	...	59	15·84	15	3·96	...	...	2	·48	12	3·12	107	28·80	138	37 20	
Howrah	6. Howrah	157,594	229	17 40	94	7·08	3	·12	50	3·79	308	23·40	93	7·08	7	·48	8	·60	102	7·68	654	50·52	381	28 92	
24-Parganas	7. Cossipore-Chitpur	40,750	60	17·64	13	3·72	...	...	...	...	19	5·52	9	2·64	...	...	...	...	10	2·88	51	15·00	34	9 96	
	8. Maniktala	32,387	54	12·48	1	·36	...	...	...	...	13	4·80	3	·72	...	...	3	·72	8	2·88	28	9·60	32	11·76	
	9. South Suburban	26,374	58	26·28	3	1·32	...	...	...	...	27	12 24	4	1·80	...	...	2	·84	4	1·80	40	18·12	86	39·12	
	10. Garden Reach	28,211	37	15·72	1	·36	...	...	...	...	36	15·24	5	2·04	...	...	2	·84	...	...	44	18 60	Data not available.		
	11. Barnagore	25,422	25	11·76	9	4·20	...	...	...	...	14	6·60	8	3·72	...	...	2	·84	7	3·24	40	18 84	83	38·64	
	12. Naihati	23,753	33	16·56	...	...	...	...	...	...	29	14·64	5	2·52	...	...	...	...	4	1·92	33	19 05	56	28·90	
	13. Bhatpara	21,540	34	18·84	2	1·08	1	·48	...	...	24	13·32	5	2·76	...	...	14	7·68	7	3·84	53	29·52	Data not available.		
Calcutta	14. Calcutta	847,796	770	10·80	278	3·84	16	·12	984	13·99	296	4·20	236	3·24	189	2 64	36	·48	703	9·84	2,740	38 76	2,100	29·64	
Nadia	15. Krishnagar	24,547	56	27·36	11	5·28	...	...	...	...	39	18·96	...	...	...	...	1	·48	4	1·92	55	26·88	55	26·88	
	16. Santipur	26,896	77	34·32	9	3·96	...	...	...	...	39	17·28	2	·84	...	...	...	...	8	3·48	58	25·80	51	22·68	
Murshidabad	17. Berhampore	24,397	46	22·56	4	1·92	...	...	...	...	43	21 12	1	·48	...	...	...	...	3	1·44	51	25·08	65	31·92	
Rajshahi	18. Rampur Boalia	21,589	46	25·56	7	3·84	...	...	...	...	37	20·52	4	2 16	...	...	...	...	6	2 76	53	29·40	49	27·12	
Pabna	19. Sirajganj	23,114	31	16·08	6	3·00	1	·48	...	...	35	18·12	4	2·04	...	...	...	...	1	·48	47	24·36	35	18 12	
Dacca	20. Dacca	99,542	185	24·48	8	·96	1	·12	...	...	88	11·28	21	2·76	...	...	5	·60	78	10·32	199	26 28	212	28·08	
	21. Narayanganj	24,472	37	18·12	1	·48	...	...	...	...	9	4·32	1	·48	...	...	...	...	21	10·20	32	15·60	28	13·68	
Chittagong	22. Chittagong	22,140	19	9·72	...	...	...	...	...	...	29	15·60	1	·48	...	...	1	·48	4	2 16	35	18·96	69	37 32	
Patna	23. Patna City	134,785	322	28 56	224	19·92	36	3·12	...	...	164	14·52	35	3·00	...	...	7	·60	136	12·00	602	53·52	614	54·60	
	24. Bihar	45,063	137	36·48	25	6·60	15	3·96	...	...	54	14·28	6	1·56	...	...	1	·24	50	13 20	151	40 90	92	24 48	
	25. Dinapore	33,699	73	25·56	3	·96	4	1·32	...	...	53	18·84	17	6 00	...	...	3	·96	63	22 32	143	50 88	88	31·32	
Gaya	26. Gaya	71,288	155	26·04	13	2·16	10	1·68	...	...	118	19·80	22	3·84	...	...	2	·24	44	7·32	210	35 28	257	43·20	
Shahabad	27. Arrah	46,170	90	23·28	...	...	...	...	28	7·20	19	4 92	9	2·28	...	...	5	1·20	16	4 08	77	19·92	115	29 88	
	28. Sasaram	23,644	105	53·28	...	...	...	...	...	...	30	15·12	1	·48	...	...	...	...	12	6 00	43	21 72	51	25·80	
Saran	29. Chapra	48,901	88	22·92	7	1·80	5	1·20	34	8·88	145	37·80	12	3·12	...	...	3	·72	70	18·24	278	72·12	140	36·60	
Champaran	30. Bettiah	24,696	78	37·80	3	1·44	1	·48	...	...	40	19·32	3	1·44	...	...	...	...	43	20 88	90	43·68	80	38·76	
Muzaffarpur	31. Muzaffarpur	45,617	125	32·88	98	25·68	20	5·16	...	...	100	26·28	22	5·76	...	...	4	·96	47	12 36	291	76·44	130	34·08	
	32. Hajipur	21,598	76	42·60	8	4·44	1	·48	3	1·68	95	53·16	8	4·44	...	...	3	1·68	49	27·36	167	93·60	70	39·24	
Darbhanga	33. Darbhanga	66,344	207	37·44	150	27 12	11	1·92	27	4·80	61	9·18	18	3·24	...	...	1	·12	167	30 24	426	76·92	359	64 92	
Monghyr	34. Monghyr	35,880	115	38·52	15	4·92	...	...	77	25·68	29	9·60	10	3·24	...	...	1	·24	44	14 64	176	58·80	154	51 48	
Bhagalpur	35. Bhagalpur	75,760	151	23·88	25	3·84	1	·12	...	...	137	21·60	1	·12	...	...	1	·12	44	6 96	209	33·00	164	25·92	
Cuttack	36. Cuttack	51,264	118	27·48	8	1·80	...	...	...	...	50	11·64	14	3·24	...	...	2	·36	26	6·00	100	23·28	86	20 04	
Balasore	37. Balasore	20,880	78	44·76	1	·48	...	...	...	...	6	4·56	3	1·68	...	...	...	...	20	11·40	32	18·36	41	23·52	
Puri	38. Puri	49,334	30	7·20	8	1·92	...	...	...	...	21	5·04	14	3·36	2	·48	1	·24	32	7 68	78	18·96	78	18 96	
Ranchi	39. Ranchi	25,979	20	9·24	...	...	...	...	...	...	11	5·04	3	1·32	...	...	...	...	11	5 04	25	11·52	45	20 76	
	Total of all towns with a population of 20,000 and over	2,441,962	4,056	19·92	1,076	5·28	170	·72	1,203	5·88	2,432	11·88	652	3·12	201	·96	116	·48	1,131	9 48	7,782	38·16	6,383	31·20	
	Average of the corresponding month of previous five years	.....	3,762	18 48	812	3·96	154	·72	Data not available.		2,522	12·36	589	2·88	Data not available.		114	·48	2,162	01·56	6,353	31·20	...	...	
	Difference + or −	.....	+294	+1·44	+264	+1·32	+16	Equal			−90	−·48	+63	+·24			+2	Equal.	−231	−1·68	+1,429	+6 96	...	...	

OFFICE OF SANITARY COMMISSIONER FOR BENGAL.
The 19th July 1902.

W. W. CLEMESHA, CAPTAIN I.M.S.,
Offg. Sanitary Commissioner for Bengal.

Vital Statistics of the Districts of Bengal for the month of May 1902

Divisions.	Districts.	Population under registration.	BIRTHS.		DEATHS.																AVERAGE OF CORRESPONDING MONTH OF PREVIOUS FIVE YEARS.		Remarks.
					CHOLERA.		SMALL-POX.		PLAGUE.		FEVER.		DYSENTERY AND DIARRHŒA.		RESPIRATORY DISEASES.		INJURY.		OTHER CAUSES.		TOTAL OF ALL CAUSES.				
			Number registered.	Ratio per 1,000 of population per annum.	Number registered.	Ratio per 1,000 of population per annum.	Number registered.	Ratio per 1,000 of population per annum.	Number registered.	Ratio per 1,000 of population per annum.	Number registered.	Ratio per 1,000 of population per annum.	Number registered.	Ratio per 1,000 of population per annum.	Number registered.	Ratio per 1,000 of population per annum.	Number registered.	Ratio per 1,000 of population per annum.	Number registered.	Ratio per 1,000 of population per annum.	Number registered.	Ratio per 1,000 of population per annum.	Number registered.	Ratio per 1,000 of population per annum.	
1	2	3	4	5	6	7	8	9	10	11	12	13	14	15	16	17	18	19	20	21	22	23	24	25	26
Burdwan	Burdwan	1,532,475	4,631	36·12	210	1·56	36	·24	...	...	2,370	18·48	73	·48	4	·02	34	·24	968	5·28	3,415	26·64	3,196	24·96	
	Birbhum	902,280	3,081	40·92	14	·12	6	·07	...	...	1,155	15·36	7	·08	...	...	17	·12	462	6·12	1,638	29·08	1,741	23·04	
	Bankura	1,116,411	3,686	39·60	136	1·44	235	2·52	...	...	1,827	19·56	35	·36	...	...	26	·24	766	8·16	3,028	32·52	2,247	24·12	
	Midnapore	2,788,114	7,239	31·08	200	·84	2251	9·60	1	·003	4,464	19·20	167	·60	3	·008	75	·24	1,068	4·56	8,318	35·40	5,047	21·60	
	Hooghly, including Serampore.	1,049,282	2,290	26·16	123	1·32	44	·48	3	·02	1,622	18·48	140	1·56	25	·24	46	·48	380	4·32	2,383	27·24	2,339	26·64	
Presidency	Howrah	880,514	1,950	27·48	193	2·64	33	·36	56	·72	926	12·96	233	3·24	7	·09	45	·60	380	5·28	1,871	26·22	1,631	23·76	
	24-Parganas	2,078,389	5,522	31·80	253	1·44	166	·84	7	·03	2,673	15·36	126	·72	4	·01	148	·84	611	3·48	3,988	22·92	2,945	16·92	
	Calcutta	847,796	770	10·50	278	3·84	16	·12	954	13·92	298	4·20	234	3·24	189	2·64	36	·48	773	9·84	2,740	38·76	2,100	29·64	
	Nadia	1,667,491	4,519	35·52	653	4·80	1	·006	2	·01	3,525	25·32	17	·12	...	...	75	·48	430	3·00	4,733	33·96	3,563	25·56	
	Murshidabad	1,333,184	3,922	35·28	58	·72	21	·12	...	...	3,494	22·44	2	·01	...	...	51	·36	359	3·12	3,013	27·12	2,781	24·96	
	Jessore	1,813,155	4,976	39·88	140	·84	9	·04	...	...	3,411	22·56	9	·04	...	...	77	·48	372	2·40	4,018	26·52	4,173	27·60	
	Khulna	1,253,043	3,551	33·96	127	1·20	3	·01	...	...	1,307	12·48	18	·24	4	·03	31	·72	570	5·40	2,111	20·16	2,483	23·52	
Rajshahi	Rajshahi	1,462,407	4,461	36·60	678	4·92	7	·04	...	...	4,081	33·48	22	·12	...	...	58	·36	310	2·52	5,066	41·64	4,222	34·56	
	Dinajpur	1,567,080	6,017	45·96	52	·36	228	1·68	3	·01	4,014	30·72	11	·08	1	·007	43	·24	331	2·52	4,683	35·76	4,323	33·00	
	Jalpaiguri	787,380	2,023	30·72	1	·01	19	·24	...	...	1,991	30·24	24	·36	...	...	12	·12	39	·48	2,086	31·68	2,615	39·84	
	Darjeeling	249,117	657	31·56	2	·09	...	...	...	...	580	27·84	73	3·48	2	·09	5	·24	86	4·08	748	36·00	981	45·72	
	Rangpur	2,154,181	6,044	33·24	40	·12	410	2·28	...	...	4,819	26·76	7	·03	...	...	21	·12	175	·96	5,492	30·48	4,925	27·36	
	Bogra	854,631	2,926	41·04	173	2·40	75	·96	...	...	1,795	25·08	4	·04	...	...	15	·24	212	2·88	2,282	32·04	1,666	23·28	
	Pabna	1,490,461	3,163	26·88	376	3·12	90	·72	...	...	4,465	37·68	16	·12	...	...	37	·24	131	1·08	4,115	43·20	3,861	32·52	
Dacca	Dacca	2,649,522	6,233	28·44	286	1·20	75	·24	...	...	3,458	16·08	163	·72	31	·12	73	·24	672	3·84	5,053	22·80	5,454	24·60	
	Mymensingh	3,915,068	9,108	27·84	651	1·92	300	·84	...	...	5,466	16·68	123	·36	...	...	90	·24	1,023	3·12	7,652	23·40	7,983	24·36	
	Faridpur	1,487,646	4,830	29·88	400	2·40	15	·08	...	...	4,194	25·92	52	·24	...	...	53	·24	686	4·20	5,400	33·36	5,197	32·16	
	Backergunge	2,291,722	6,512	34·08	420	2·16	3	·01	...	...	3,267	17·04	31	·12	...	...	182	·84	1,496	7·80	5,379	28·08	6,062	31·68	
Chittagong	Tippera	2,117,991	5,808	32·88	45	·24	53	·24	...	...	2,398	12·96	35	·12	8	·03	135	·72	634	3·48	3,206	18·12	4,173	23·64	
	Noakhali	1,141,723	3,747	39·36	16	·12	6	·06	...	...	2,117	22·20	...	...	...	...	92	·96	308	3·12	2,539	26·64	3,604	37·80	
	Chittagong	1,353,350	4,559	40·32	42	·36	1	·008	...	...	2,463	22·08	13	·09	...	...	88	·72	119	·96	2,755	24·36	4,062	36·00	
	Chittagong Hill Tracts	...	...	...	...	...	...	...	...	...	...	...	...	...	...	...	...	...	...	...	...	...	...	...	Not under registration.
Patna	Patna	1,624,986	3,967	29·16	980	7·20	958	6·96	101	·72	1,968	14·64	458	3·24	38	·24	80	·48	1,746	12·84	6,340	46·80	4,489	33·12	
	Gaya	2,089,933	4,750	27·60	219	1·20	496	2·88	8	·01	3,728	21·60	75	·36	...	...	71	·36	589	3·36	5,181	30·12	5,066	29·40	
	Shahabad	1,992,696	4,926	30·12	314	1·80	16	·12	56	·24	2,527	15·36	32	·12	...	...	56	·24	458	2·76	3,459	21·12	4,968	30·24	
	Saran	2,409,599	6,785	33·72	1,207	6·00	118	·48	503	2·40	5,230	15·96	464	2·28	...	...	99	·48	2,462	12·24	8,043	40·20	6,190	30·72	
	Champaran	1,790,463	6,314	35·52	485	3·24	41	·24	...	...	5,331	29·20	24	·12	...	...	67	·36	905	6·00	4,843	32·40	4,540	30·36	
	Muzaffarpur	2,754,749	9,663	42·00	2,362	10·20	48	·36	7	·09	7,245	31·44	155	·60	...	...	108	·36	1,491	6·48	11,459	49·80	6,837	29·76	
	Darbhanga	2,912,611	10,866	44·76	1,689	6·84	59	·24	147	·60	6,696	27·12	84	·24	...	...	97	·36	1,228	5·04	9,919	40·80	7,613	31·32	
Bhagalpur	Monghyr	2,068,814	5,543	32·04	948	5·40	219	1·20	139	·72	3,531	20·40	40	·12	...	...	77	·36	719	4·08	5,673	32·88	5,459	31·56	
	Bhagalpur	2,068,863	6,654	38·16	718	3·96	79	·36	...	...	4,023	23·04	12	·04	...	...	59	·24	546	3·12	5,426	31·08	5,626	32·04	
	Purnea	1,874,794	5,447	34·80	1	·006	69	·36	...	...	4,149	26·76	12	·07	...	...	44	·24	183	1·20	4,613	28·80	7,109	45·36	
	Malda	884,080	3,054	41·40	206	2·76	23	·24	...	...	1,873	25·32	10	·12	...	...	16	·12	200	2·64	2,327	31·56	1,989	26·88	
	Sonthal Parganas	1,809,737	5,789	38·28	150	·96	216	1·32	...	...	4,534	16·80	14	·08	...	...	23	·12	376	2·40	3,314	21·96	3,043	20·40	
Orissa	Cuttack	2,092,758	6,945	40·68	249	1·44	325	1·80	2	·01	1,812	10·44	553	3·12	8	·03	121	·60	1,388	7·68	4,324	25·56	5,082	29·52	
	Balasore	1,071,197	1,933	21·60	278	3·00	181	1·92	...	...	762	8·52	141	1·56	...	...	61	·60	880	9·84	2,303	25·68	2,328	28·20	
	Puri	1,017,284	3,016	35·52	84	·96	30	·84	...	...	498	5·76	291	3·36	21	·24	56	·60	898	10·44	1,918	22·56	2,744	32·28	
	Angul and Khondmals	...	...	...	...	...	...	...	...	...	...	...	...	...	...	...	...	...	...	...	...	...	...	...	Not under registration.
Chota Nagpur	Hazaribagh	1,177,961	4,309	43·80	103	·96	104	·96	2	·01	1,358	13·84	64	·60	11	·10	65	·60	513	5·16	2,719	27·60	2,609	26·52	
	Ranchi	1,187,925	4,057	40·92	...	...	9	·84	...	...	1,668	16·68	116	1·08	...	...	49	·48	731	7·32	2,857	25·80	2,167	21·84	
	Palamau	819,000	2,056	30·72	81	1·56	65	1·20	...	...	915	17·64	7	·12	...	...	30	·48	303	5·84	1,301	25·08	1,520	29·40	
	Manbhum	1,301,564	4,126	34·04	362	3·24	511	4·68	...	...	2,439	22·44	89	·48	...	...	54	·48	655	6·00	4,089	37·56	2,903	24·00	
	Singhbhum	613,579	1,850	36·12	7	·12	554	10·80	...	...	755	14·76	26	·48	...	...	31	·60	153	2·88	1,525	29·76	907	17·64	
	Total	74,428,193	213,398	34·32	16,006	2·52	3,328	1·32	2,916	·24	126,711	20·40	4,156	·60	335	·04	2,877	·36	29,476	4·68	190,027	30·60	176,567	28·44	
	Average of corresponding month of previous five years	.....	205,766	32·76	16,480	2·64	2,896	·36	Data not available.		123,486	19·68	4,108	·60	Data not available.		2,980	·36	27,537	4·32	176,567	28·44	.....	.....	
	Difference + or −	.....	+9,632	+1·56	−472	−·12	+5,432	+·96			+6,125	+·72	+148	Equal			−83	Equal	+1,939	+·36	+13,460	+2·16	.....	.....	

OFFICE OF SANITARY COMMISSIONER FOR BENGAL,
The 19th July 1902.

W. W. CLEMESHA, CAPTAIN, I.M.S.,
Offg. Sanitary Commissioner for Bengal.

IRRIGATION DEPARTMENT, BENGAL.

Statement showing heights over mean sea-level and low water in the rivers Ganges, Bhagirathi, Jalangi, and Brahmaputra for the month of June 1902, and the highest reading of each gauge over M. S. L. since 1876.

Date.		River Ganges.																River Bhagirathi.		River Jalangi.		River Brahmaputra.	
		Mirzapore.		Benares.		Buxar.		Dinapore.		Monghyr.		Sahibganj.		Rampur Boalia.		Goalundo.		Berhampore.		Sarupganj.		Gauhati.	
	Distance in miles.	From Allahabad ... 86		From Allahabad ... 134	From Mirzapore ... 48	From Benares 90		From Benares 177	From Buxar 87	From Benares 287	From Dinapore 110	From Benares 381	From Monghyr 94	From Benares 471	From Sahibganj ... 90	From Benares 591	From Rampur Boalia ... 130						
	Highest Gauge Reading.	26th August 1889. 253·47		26th August 1889. 241·46		31st August 1898. 200·63		5th September 1901. 169·73		8th September 1901. 129·60		23rd August 1879. 98·25		26th August 1879. 69·25		20th August 1893. 31·52		14th August 1890. 64·70		25th September 1900. 36·90		24th July 1900. 179·41	
		Height over zero of gauge.	Height over mean sea-level.	Height over zero of gauge.	Height over mean sea-level.	Height over zero of gauge.	Height over mean sea-level.	Height over zero of gauge.	Height over mean sea-level.	Height over zero of gauge.	Height over mean sea-level.	Height over zero of gauge.	Height over mean sea-level.	Height over zero of gauge.	Height over mean sea-level.	Height over zero of gauge.	Height over mean sea-level.	Height over zero of gauge.	Height over mean sea-level.	Height over zero of gauge.	Height over mean sea-level.	Height over zero of gauge.	Heigh over mean sea-level.
1	2	3	4	5	6	7	8	9	10	11	12	13	14	15	16	17	18	19	20	21	22	23	24
		Below zero.		Below zero.		Below zero.						Below zero.											
1st ...	...	2·42	203·80	3·64	193·16	0·92	168·13	3·90	138·13	0·92	102·77	1·17	66·33	0·79	43·79	9·08	18·62	2·42	36·16	3·60	3·60	12·00	160·76
2nd ...	...	2·33	203·89	3·67	193·13	0·92	168·13	3·90	138·13	0·83	102·68	1·08	66·92	0·90	43·90	9·00	17·94	2·46	36·20	3·70	3·70	13·00	161·76
3rd ...	...	2·33	203 89	3·67	193·13	0·98	168·13	4·40	138·63	0·83	102·68	1·00	67·00	1·02	43·02	8·75	17·69	2·50	36·24	3·90	3·90	13 70	162·46
4th ...	...	2·25	203·97	3·67	193·13	0·75	168·30	5·00	139·23	0·92	102·27	0·83	67·17	1·06	43·06	8·83	17·77	2·54	36·28	3·90	3·90	13·75	162·51
5th ...	...	2·17	204·05	3·58	193·22	0·75	168·30	5·00	139·23	0·92	102·77	0·75	67·25	1·12	43·12	9·00	17·94	2·42	36·16	4·20	4·20	13·30	162·06
6th ...	...	2 08	204·14	3·54	193·26	0·75	168·30	4·70	138·93	1·08	102·93	0·58	67·42	1·21	43·21	9·25	18 19	2·33	36·07	4·60	4·60	12·80	161·56
7th ...	...	2·00	204·22	3·50	193·30	0·75	168·30	4·40	138·63	1·25	103·10	0·58	67·42	1·40	43·40	9·67	18·61	2·21	35·95	4·90	4·80	12·50	161·26
8th ...	...	2·00	204·22	3·33	193 47	0·67	168·38	4·10	138·33	1·17	103 08	0·42	67·58	1·46	43·46	9·83	18·77	2·12	35·86	5·00	5·00	12 20	160·96
9th ...	...	1·83	204·39	3·08	193·72	0·67	168·38	4·00	138·23	1·25	103·10	0·33	67·67	1·63	43 63	10·00	18·94	2·29	36·03	5·20	5·20	12·60	161·36
10th ...	...	1·83	204·39	2·92	193·88	0·58	168·47	4·10	138·33	1·33	103·18	0·17	67·83	1·75	43·75	10·00	18·94	2·33	36·07	5·20	5·20	12 90	161·66
11th ...	...	1·83	204·39	2·83	193·97	2 58	168·47	4·20	138·43	1·50	103·35	0·08	67·92	1·96	43·96	10·00	18·94	2·33	36·07	5·20	5·20	12·70	161·46
12th ...	...	1·75	204·47	2·75	194·30	0·17	168·88	4·40	138 63	1·83	103·68	0·08	67·92	2·06	44·06	9·83	18·77	2·37	36·11	5·20	5·20	12·20	160 96
						Above zero.						Above zero.											
13th ...	...	1·83	204·39	2·25	194·85	0·17	169·22	4·70	138·93	1·92	103·77	0 25	68·25	2·15	44·15	9·83	18·77	2·50	36·24	4·10	4·10	12·20	160·96
14th ...	...	1·92	204·30	2·08	194·72	0·17	169·22	5·40	139·63	2·08	103·93	0·50	68·50	2·30	44·30	9·83	18·77	2·54	36·28	4·00	4·00	12 30	161·06
15th ...	...	1·50	204·72	2·00	194·80	0·17	169·22	6·20	140·43	2·42	104·27	0·42	68·42	2·80	44·80	10·33	19·27	2·67	36·41	4·00	4·00	13·40	162·16
16th ...	...	1·00	205·22	1·92	194·88	0·08	169·13	5·80	140·03	2·75	104 60	0·50	68·50	3·20	45·20	10·50	19·44	2·71	36·45	5·20	5·20	14·80	163·56
17th ...	...	1·00	205·22	1·83	194·97	0·08	169·13	5·70	139·93	4·17	106·02	0·50	68·50	3·45	45 45	10·92	19·86	2·75	36·49	5·30	5·30	17·00	165·76
18th ...	...	1·50	204·72	1·75	195·05	0·17	169·22	6·30	140·53	4·92	106·77	0·75	69·75	3·65	45·65	10 92	19·86	2·83	36·57	5·30	5·30	21·70	169·46
19th ...	...	1·50	204·72	2·00	194·80	0·08	169·13	7 60	141·83	5·50	107·35	1·50	69·50	4·15	46·15	11·33	20·27	2·83	36·57	5·50	5·50	23·60	172·36
20th ...	...	1·33	204·89	2·17	194·63	0·08	169·13	8·10	142·33	4·25	106·10	1·75	69·75	4·73	46·73	11·67	20·61	2·79	36·53	5·50	5·50	23·60	172·36
						Below zero.																	
21st ...	...	1·42	204·80	2·33	194·47	0·17	168·88	8·30	142·53	5·50	107·35	1·92	69·92	5·00	47·00	12·75	21·69	2·79	36·53	5·50	5·50	24·90	173·66
22nd ...	...	1·33	204·89	2·25	194·55	0·33	168·72	8·20	142·43	6·33	108·18	2·33	70·33	5·25	47·25	13·83	22·77	2 92	36·66	4·60	4·60	25·70	174·46
23rd ...	...	1·25	204·97	2·17	194·63	0·33	168·72	7·80	142·13	6·42	108·27	2·67	70·67	5·90	47·90	14·50	23·44	3·08	36·82	4·50	4·80	26·30	175·06
24th ...	...	1·08	206·14	2·08	194·72	0·42	168·63	7·70	141·93	6·42	108 27	2·92	70·92	6·65	48·65	14·92	23·86	3·67	37·41	5·50	5·50	26·60	175·36
25th ...	...	1·00	205·22	2·00	194·80	0·33	168·72	8·30	142·53	5·83	107·68	3 67	71·67	7 17	49·17	15·25	24·19	5·08	38·83	5·20	5·20	26·90	175·66
26th ...	...	1·00	205·22	1·33	195·47	0·25	168·80	8·50	142·73	5·25	107·10	4·33	72·33	7·17	49·17	15·50	24·44	6·25	39·99	5·60	5·60	27·00	175 76
27th ...	...	0·92	205 30	1·08	195·72	0·17	168·88	8·30	142·53	5·17	107·02	5·17	73·17	7·08	49 08	15·58	24·52	6·54	40·28	6·00	6·00	27·10	175·86
						Above zero.																	
28th ...	...	0·92	205·30	1·00	195·80	0·17	169·22	8·00	142·23	5·17	107·02	5·67	73·67	6·96	48·96	15·67	24·61	6·33	40·07	6·50	6·50	26·70	175·46
29th ...	...	0·67	205·55	0·92	195 88	0·33	169 38	7·60	141·83	5·00	106·85	6·00	74·00	6·83	48·83	15·67	24·61	5·92	39·66	6·40	6·40	26·05	174·81
30th ...	...	0·67	205·55	0·83	195·97	0·50	169·55	7·20	141·43	4·92	106·77	6·50	74·50	6·60	48·60	16·08	25·02	5·50	39·24	6·60	6·60	25·70	174·46

CALCUTTA,
The 29th July 1902.

R. C. EDGE,
Under-Secy. to the Govt. of Bengal.

GOVERNMENT OF BENGAL, IRRIGATION DEPARTMENT.

Approximate return of traffic on the Circular and Eastern Canals for the week ending Saturday, the 26th July 1902, as compared with the corresponding week of the previous year.

Nature of Cargo.	Week ending Saturday, the 26th July 1902.			Week ending Saturday, the 27th July 1901.		
	Number of boats.	Weight of cargo.	Tollage.	Number of boats.	Weight of cargo.	Tollage.
		Mds.	Rs		Mds.	Rs.
Rice and paddy	320	32,700	403	262	49,515	568
Jute	29	36,300*	297	9	1,700†	29
Firewood	42	22,000	348	73	55,000	824
Other articles	481	1,07,050	1,141	570	1,45,602	1,891
Total ...	872	1.98.050	2,189	914	2,51,817	3,312

* Weight by canal measurement, 36,600 maunds.
† Ditto ditto, 1,962½ ,,

Results of the Meteorological Observations taken at the Alipore Observatory from 20th to 26th July 1902.

Month.	Date.	Maximum in sun.	Number of hours of bright sunshine.	Mean pressure barometer at 32° Fahr.	Temperature. Mean.	Maximum.	Range.	Minimum.	Hygrometry. Mean wet bulb.	Vapour tension.	Dew point.	Humidity.	Wind. Prevailing direction.	Miles recorded.	Rain.	Weather.
1902.		°		Inches.	°	°	°	°	°	Inch.	°	%			Inches.	
July	20th	126·2	1·3	29·587	81·5	84·7	8·1	76·6	78·3	0·930	77·0	86	WSW and SW ...	115	0·15	Chiefly cloudy, o, p.
,,	21st	141·9	1·6	·526	82·0	87·4	8·4	79·0	79·4	·973	78·4	89	SW by W and SW	119	0·17	Chiefly cloudy, o, d, p.
,,	22nd	122 2	Nil	·613	80·0	85·4	9·2	76 2	77·1	·895	75·9	88	SW by S, SW and WSW.	243	0·39	Cloudy, o, d, p.
,,	23rd	147·7	4·2	·593	83·7	90·2	15·1	75·1	80·4	·995	79·1	86	SSW and SW ...	148	3·35	Chiefly cloudy, o, p.
,,	24th	149·2	5·6	·523	85·3	91·0	10·8	80·2	81·6	1·033	80·2	85	S by W, SW and S	127	0·38	Partially cloudy, o, g. p.
,,	25th	150·5	6·2	·466	85·9	90·4	9·9	80·5	82 2	1·050	80·7	85	S, SSE and SSW	133	Nil	Partially cloudy, o
,,	26th	149·1	3·5	·408	84·3	90 2	9 9	80·3	80·3	0·981	78·6	83	SSE and W by N	51	0·07	Chiefly cloudy, o, d.

	Inches.
The mean pressure of the seven days	29·524
The average pressure of the corresponding period for 24 years, Surveyor-General's Office	29·519
	Hours.
The total number of hours of bright sunshine	22·4
The maximum possible number of hours of sunshine	92·8
	°
The mean temperature of the seven days	83·2
The average temperature of the corresponding period for 24 years, Surveyor-General's Office	83·3
The extreme variation of temperature	15·9
The maximum temperature	91·0
	Miles.
The highest velocity of the wind in one hour	17
	%
The mean relative humidity	86
The average relative humidity of the corresponding period for 24 years, Surveyor-General's Office	86
	Inches.
The total fall of rain from 20th to 26th July 1902	4·51
The average fall of the corresponding period for 24 years, Surveyor-General's Office	2·92
The total fall from 1st January to 26th July 1902	34·31
The average fall of the corresponding period for 24 years, Surveyor-General's Office	31·90

The mean pressure, temperature, etc., are deduced from the traces of the Barograph and Thermograph, and from eye observations.

The maximum and minimum temperatures are obtained from self-registering thermometers. All the thermometers are verified and the readings have been corrected to a standard constructed and verified at the Kew Observatory. They are exposed under a thatched shed open at the sides, and are suspended four feet above the ground.

The barometer readings are corrected approximately to those of the standard, Newman's No. 86, formerly at the Surveyor-General's Office.

The hygrometric elements are obtained from Tables III, IV, and V of the official tables computed in the Meteorological Office, and based on Regnault's modifications of August's formula.

The directions and the movement of the wind are taken from the trace of a Beckley's anemograph.

The mouth of the rain-gauge is one foot above the ground.

o, overcast; g, gloomy; d, drizzling rain; p, passing temporary showers.

METEOROLOGICAL OFFICE, GOVT. OF INDIA,
Alipore (Calcutta), the 28th July 1902.

G. W. KÜCHLER
for *Meteorological Reporter to the Govt. of India and Director-General of Indian Observatories.*

EAST INDIAN RAILWAY.

Statement of Goods Traffic in staples carried during the four weeks ending 26th April 1902 as compared with the same period of 1901.

STAPLES.	1901.		1902.		INCREASE.		DECREASE.	
	Weight.	Freight.	Weight.	Freight.	Weight.	Freight.	Weight.	Freight.
	Mds.	Rs.	Mds.	Rs.	Mds.	Rs	Mds.	Rs.
Apparel, including drapery, haberdashery, millinery, uniforms, accoutrements, boots and shoes	3,350	6,843	6,076	6,152	2,726	.....	.....	691
Coal & Coke carried for the public and foreign railways	1,06,75,635	15,44,663	1,08,43,596	15,62,244	1,67,760	17,581	.....	.....
Cotton—								
(1) Raw	99,613	37,924	1,17,621	79,273	28,008	41,349	.....	.....
(2) Manufactured—								
(a) Twist and Yarn, European	2,300	2,761	2,319	2,755	19	.....	.....	6
(b) Ditto, Indian	28,196	9,883	33,703	11,572	5,597	1,689	.....	.....
(c) Piece-goods, European	1,18,790	1,27,605	1,88,911	2,04,459	70,121	76,854	.....	.....
(d) Ditto, Indian	21,527	9,561	20,293	9,883	.....	322	1,334	.....
(e) Others	1,008	923	2,701	1,585	1,693	637	.....	.....
Chemicals excepting saltpetre	4,818	3,105	7,309	4,396	2,491	1,291	.....	.....
Drugs—								
1.—Intoxicating, other than opium	405	181	227	159	.....	.....	178	42
2.—Non-intoxicating	7,198	5,375	10,492	7,032	3,294	1,657	.....	.....
Dyes and Tans—								
1.—Al (Morinda citrifolia)	1,251	269	546	121	.....	.....	705	148
2.—Alizarine and aniline dyes	679	827	576	483	.....	.....	103	344
3.—Cutch	2,622	1,212	2,970	1,259	448	47	.....	.....
4.—Indigo	877	890	936	811	59	.....	.....	79
5.—Myrabolams	17,106	6,066	18,432	5,942	1,326	.....	.....	124
6.—Tanning barks	8,355	690	5,635	577	.....	.....	2,720	113
7.—Turmeric	21,109	17,233	23,475	18,101	2,366	868	.....	.....
8.—Others	13,925	5,703	13,709	7,208	.....	1,505	216	.....
Fodder—								
1.—Oilcake	97,676	14,024	1,00,542	19,025	2,866	5,001	.....	.....
2.—Hay, straw and grass	26,916	2,766	44,281	7,115	17,365	4,349	.....	.....
Fruits and vegetables, fresh	10,768	3,034	11,398	3,424	630	390	.....	.....
Grain and Pulse—								
1.—Wheat	3,48,071	98,016	4,03,698	90,106	55,627	.....	.....	7,910
2.—Wheat flour	37,259	9,388	55,751	11,866	18,492	2,478	.....	.....
3.—Rice in the husk	95,859	11,184	55,457	6,636	.....	.....	40,402	4,548
4.—Rice not in the husk	5,37,496	95,325	5,02,088	1,05,148	.....	9,823	35,408	.....
5.—Jowar and bajra	50,861	7,042	23,242	2,986	.....	.....	27,619	4,057
6.—Gram and pulse	5,60,876	1,76,257	5,88,251	1,34,235	27,375	.....	.....	42,022
7.—Others	1,24,477	23,706	1,34,796	18,198	10,319	.....	.....	5,508
Hides and Skins—								
1.—Hides of cattle	40,390	26,153	44,039	24,010	.....	.....	5,281	2,143
2.—Skins of sheep, &c.	17,246	9,978	13,768	6,259	.....	.....	3,478	3,719
Horns	231	120	903	634	672	514	.....	.....
Hemp (Indian) and other fibres (excluding jute)	58,726	9,944	39,376	5,346	.....	.....	19,350	4,598
Jute—								
1.—Raw	62,592	13,918	1,29,191	23,776	66,599	9,858	.....	.....
2.—Gunny-bags and cloth	2,26,486	1,38,517	1,58,951	77,465	.....	.....	67,535	61,052
Lac	25,143	19,938	21,918	13,168	.....	.....	13,225	6,770
Leather—								
1.—Unwrought	1,408	2,775	1,486	2,237	18	.....	.....	538
2.—Wrought excepting boots and shoes	1,647	1,878	520	293	.....	.....	1,127	1,585
Liquors—								
1.—Ale and Beer	13,539	4,826	13,389	4,455	.....	.....	150	371
2.—Spirits of all kinds, including country spirit	1,324	1,036	1,291	1,253	.....	.....	33	683
3.—Wines	2,370	3,240	2,443	3,548	73	308	.....	.....
4.—All other sorts, including toddy and fermented liquor, other than ale and beer	102	55	107	104	5	49	....	.....
Metals—								
1.—Brass, unwrought	1,220	720	3,174	1,266	1,948	546	.....	.....
2.— Do., wrought	16,021	5,941	13,548	5,934	.....	.....	2,473	7
3.—Copper, unwrought	133	138	320	203	187	65	.....	.....
4.— Do., wrought	492	392	3,595	3,809	3,103	3,417	.....	.....
5.—Iron and steel—								
(a) Cast	16,195	6,560	17,344	4,400	1,049	.....	.....	2,160
(b) Unwrought	49,058	3,182	37,847	1,964	.....	.....	11,211	1,218
(c) Wrought	74,313	34,387	78,083	33,237	3,725	.....	.....	1,150
(d) Manufactures of iron and steel	27,535	12,702	29,733	16,241	2,198	3,539	.....	.....
6.—Zinc and spelter	2,914	1,852	4,813	3,330	1,899	1,478	.....	.....
7.—Others	9,963	6,993	9,278	6,489	.....	.....	685	504
Oils—								
1.—Kerosine	1,11,949	41,954	1,39,040	44,982	27,091	3,228	.....	.....
2.—Castor	4,255	1,472	11,550	2,985	7,295	1,513	.....	.....
3.—Cocoanut	6,453	1,860	4,730	1,647	.....	.....	1,723	213
4.—Mustard and rape	14,456	12,469	8,473	2,828	.....	.....	5,983	9,641
5.—Others	2,731	1,605	5,506	3,833	2,775	2,228	.....	.....
Oilseeds—								
1.—Castor	84,379	24,722	1,15,439	23,396	31,060	.....	.....	1,326
2.—Earthnuts	.....	.....	13	5	13	5	.....	.....
3.—Linseed	7,42,424	2,00,392	10,50,355	2,59,272	3,07,931	58,880	.....	.....
4.—Poppy	37,091	9,685	1,27,887	33,328	90,796	23,643	.....	.....
5.—Rape and mustard	10,38,025	4,06,081	9,52,269	2,16,483	.....	.....	80,765	1,90,598
6.—Til or jinjili	35,643	5,240	16,444	3,153	.....	.....	19,199	1,793
7.—Others	28,173	8,149	19,205	4,323	.....	.....	8,968	3,826
Opium	18,516	14,476	14,723	7,021	.....	.....	3,793	6,555
Paper and pasteboard	15,927	8,350	18,238	10,113	2,311	1,763	.....	.....
Provisions—								
1.—Dried fruits and nuts	10,072	5,001	10,851	5,301	179	300	.....	.....
2.—Ghee	30,982	24,979	43,187	25,260	12,205	281	.....	.....
3.—Potatoes	92,068	18,286	1,22,936	33,508	30,878	15,123	.....	5,134
4.—Others	56,914	21,652	40,197	16,518	.....	.....	16,717	.....
Railway plant & rolling-stock carried for the public & foreign railways—								
1.—Locomotives, engines and tenders and parts thereof	5	9	480	155	475	146	.....	.....
2.—Carriages and trucks and parts thereof	2,930	8,189	166	67	.....	.....	2,764	8,122
3.—Materials—								
(a) Steel rails and fish-plates	15,113	14,921	10,685	6,877	.....	.....	4,428	8,044
(b) Sleepers and keys of steel and cast-iron								
(c) Other sorts	960	2,157	22,147	1,810	21,187	.....	.....	347
Salt	1,17,975	24,371	2,44,797	31,801	1,26,822	7,430	.....	.....
	5,24,136	60,760	5,31,766	1,02,777	7,630	12,027	.....	.....

Staples.	1901.		1902.		Increase.		Decrease.	
	Weight.	Freight.	Weight.	Freight.	Weight.	Freight.	Weight.	Freight.
	Mds.	Rs.	Mds.	Rs.	Mds.	Rs.	Mds.	Rs.
Saltpetre and other saline substances—								
1.—Saltpetre	51,553	11,082	65,335	20,699	31,782	15,668	.....	.....
2.—Other saline substances	32,166	8,312	33,337	11,233	1,171	2,021	.....	.....
Silk—								
1.—*Raw—*								
(*a*) Foreign	.....	.....	.....	.....	.....	.....	.....	.....
(*b*) Indian	1,377	819	1,358	785	.. ...	.....	19	34
2.—*Piece-goods—*								
(*a*) Foreign	.....	.....	.....	.....	.....	.....	.....	.....
(*b*) Indian	113	207	200	360	93	153	.....	.....
Spices—								
1.—Betelnuts	19,613	16,337	24,361	18,036	4,748	1,699	.....	.....
2.—Cardamoms	707	531	1,460	1,078	661	545	.....	.....
3.—Chillies	26,102	18,778	23,496	19,085	.....	307	2,606	.. ...
4.—Ginger	1,385	570	1,284	438	... ..	.....	101	132
5.—Pepper	1,860	1,186	2,412	2,353	1,646	1,170	.....	...
6.—Others	34,853	30,838	30 972	23,451	...	.....	3,881	7,384
Stone and lime	3,39,946	51,714	6,10,141	87,831	2,70,195	34,037	.....	.....
Sugar—								
1.—Refined	34,258	9,108	45,721	13,723	11,463	4,615	.....	.....
2.—Unrefined—								
(*a*) Sugar	2,17,266	43,080	1,90,682	45,307	.....	2,027	26,584	.....
(*b*) *Gur, rab*, jaggree, molasses and other saccharine produce ...	3,62,470	63,377	2,35,924	49,192	.....	.....	1,26,555	15,185
Tea—								
1.—Foreign	.....	.....	.....	.....	.....	.....	.....	.....
2.—Indian	1,053	1,168	5,980	2,401	4,927	1,233	.....	.....
Tobacco	1,47,741	62,148	83,659	38,797	.....	.....	64,032	23,351
Wood—								
1.—Timber, unwrought	2,77,634	17,553	2,01,558	25,094	.....	7,539	76,276	.....
2.—Manufactures	13,343	4,453	14,284	6,273	941	1,818	.....	.....
Wool—								
1.—Raw	5,409	3,065	5,009	3,523	589	458	.....	.....
2.—Manufactured—								
(*a*) Carpets and rugs	1,086	1,141	1,260	761	.....	.....	726	380
(*b*) Piece-goods, European	... ..	.....	124	21	123	21	.....	.....
(*c*) Ditto, Indian	934	1,250	1,223	799	289	.....	.....	451
(*d*) Other sorts of manufactures ...	1,265	1,269	810	517	.....	.....	455	752
All other articles of merchandise—								
1.—Bones	32,9.8	6,629	28,780	7,464	.....	.....	4,178	1,165
2.—Firewood	49,611	3,548	45,701	3,147	.....	.....	2,910	401
3.—Indigo seed	17,470	3,925	4,25.9	1,125	.....	.....	13,211	2,800
4.—Paints and colours	2,883	1,536	2,710	887	.....	.....	173	649
5.—Seeds other than oilseeds	8,143	1,887	61,021	15,114	52 878	13,227	.....	.....
6.—Others	11,75,207	3,56,150	15,03,617	3,35,207	3,28,410	.....	.....	20,943
Total ...	1,94,04,066	41,05,175	2,05,89,858	41,37,098	11,85,792	.....	.....	61,077
Military stores	9,378	4,332	14,176	27,856	4,798	23,524	.....	.....
Coal for railway	13,40,113	1,09,420	12,74,581	1,00,781	.. .	361	65,520	.....
Railway materials	22,93,438	60,353	24,40,034	80,963	1,52,600	20,603	.....	.....
Live-stock	.....	21,522	... ..	15,809	... ..	.....	.....	5,713
Total ...	2,30,46,995	43,93,802	2,43,24,652	43,71,500	.....	.....	.....	.....

T. Jackson, for *Acting Chief Auditor.*

Traffic Audit Office, Goods Division, Calcutta, *the 25th July 1902.*

BENGAL-NAGPUR RAILWAY.

Abstract of principal commodities carried during the month of May 1902 as compared with the corresponding period of previous year.

ARTICLES.	1902.		1901.		Total, 1902.	Total, 1901.	Increase.	Decrease.
	Up.	Down.	Up.	Down.				
	Tons.	Tons.	Tons.	Tons.	Tons.	Tons.	Tons.	Tons.
I.—Apparel, including drapery, haberdashery, millinery, uniforms, accoutrements, boots and shoes.	11	10	9	6	21	15	6	.....
II.—Coal and coke carried for the public and foreign railways.	26,932	61,835	15,898	50,871	88,767	66,769	21,998	.....
III.—Cotton—								
(1) Raw	131	463	378	1,960	594	2,338	.....	1,744
(2) Manufactured—								
(a) Twist and yarn, European	2	136	18	204	138	222	.....	84
(b) Ditto, Indian .	249	1,049	157	652	1,298	809	489	.....
(c) Piece-goods, European ...	187	96	131	35	283	166	117	.....
(d) Ditto, Indian ..	44	217	30	166	261	196	65	.....
(e) Others	1	1	1	1	2	2	.....	.....
IV.—Chemicals, excepting saltpetre ..	12	13	7	7	25	14	11	.....
V.—Drugs—								
(1) Intoxicating, other than opium.	3	1	3	8	4	11	.....	7
(2) Non-intoxicating—								
(a) Medicinal preparations ...	2	.....	2	1	2	3	.....	1
(b) Others	34	28	37	86	62	123	.....	61
VI.—Dyes and Tans—								
(1) Al (morinda citrifolia)	.....	.....	.....	.....	 1	.....	1	.....
(2) Alizarine and aniline dyes ...	.....	1	.....	.....				.....
(3) Catch	10	10	4	3	20	7	13	.....
(4) Indigo	.....	.....	1	1	.....	2	.....	2
(5) Myrabolams	2,440	365	2,520	171	2,805	2,691	114	.....
(6) Tanning barks	22	26	85	35	48	120	.....	72
(7) Turmeric	183	640	320	61	823	281	551	.....
(8) Others	68	259	76	97	327	173	154	.....
VII.—Fodder—								
(1) Oilcake	534	19	220	7	353	227	126	.....
(2) Hay, straw and grass	1·2	36	28	186	198	214	.....	16
VIII.—Fruits and vegetables, fresh	549	669	697	157	1,218	854	364	.....
IX.—Grain and pulse—								
(1) Gram and pulse	3,107	2,150	4,018	923	5,057	4,941	316	.....
(2) Jawar and bajra	44	301	169	112	345	231	64	.....
(3) Rice in the husk	513	5,821	567	2,861	6,334	3,428	2,906	.....
(4) ,, not in the husk	6,251	8,024	9,006	2,823	14,275	11,921	2,354	.....
(5) Wheat	11,006	510	3,346	360	12,115	3,746	8,369	.....
(6) ,, flour	153	30	102	59	189	101	28	.....
(7) Others	163	1,205	135	36	1,368	171	1,197	.....
X.—Hides and skins—								
(1) Hides of cattle—								
(a) Dressed or tanned ...	.....	.....	.....	.....	.....	.....	.....	.....
(b) Raw	281	625	190	330	906	520	386	.....
(2) Skins of sheep and other animals—								
(a) Dressed or tanned ...	.....	.....	.....	.....	.....	.....	.....	.....
(b) Raw	6	9	59	24	15	83	.....	68
XI.—Horns	41	19	10	5	60	21	39	.....
XII. Hemp (Indian and other fibres excluding jute).	61	878	69	781	939	850	89	.....
XIII.—Jute—								
(1) Raw	32	2	26	1	34	27	7	.....
(2) Gunny-bags and cloth	971	246	353	250	1,217	603	614	.....
XIV.—Lac	69	242	45	214	311	259	52	.....
XV.—Leather—								
(1) Unwrought	46	1	69	1	47	70	.....	23
(2) Wrought, excepting boots and shoes.	1	.....	1	.....	1	1	.....	.....
XVI.—Liquors—								
(1) Ale and beer	24	68	17	53	92	60	33	.....
(2) Spirits of all kinds, including country spirit.	22	18	12	13	40	25	15	.....
(3) Wine ,, ...	16	2	13	1	18	14	4	.....
(4) All other sorts, including toddy and fermented liquor, other than ale and beer.	.....	.....	.....	.....	.....	.....	.....	.....
XVII.—Metals—								
(1) Brass, unwrought	.....	11	1	1	11	2	9	.....
(2) ,, wrought	37	30	51	62	67	113	.....	46
(3) Copper, unwrought	.....	.....	15	.....	.....	15	.....	15
(4) ,, wrought	12	2	6	2	14	8	6	.....
(5) Iron and Steel—								
(a) Cast	4	1	13	1	5	14	.....	9
(b) Unwrought	1	1	2	383	2	385	.....	383
(c) Wrought	242	561	130	205	803	335	468	.....
(d) Manufactures	122	125	160	87	247	267	.....	20
(6) Others	20,363	92	6,481	38	20,455	6,519	13,936	.....
XVIII—Oils—								
(1) Kerosine	923	154	1,131	275	1,076	1,406	.....	330
(2) Castor	15	9	10	9	24	19	5	.....
(3) Cocoanut	18	18	19	29	36	48	.....	12
(4) Mustard and rape	21	2	2	7	23	9	14	.....
(5) Others	102	34	51	15	136	66	70	.....

ARTICLES.	1902.		1901.		Total, 1902.	Total, 1901.	Increase.	Decrease.
	Up.	Down.	Up.	Down.				
	Tons.	Tons.	Tons.	Tons.	Tons.	Tons.	Tons.	Tons.
XIX.—Oilseeds—								
(1) Castor	342	425	202	179	767	381	386	.....
(2) Earthnuts	.....	.....	.....	.....	.....	.....	.....	.....
(3) Linseed	880	364	1,752	754	1,244	2,506	.....	1,262
(4) Poppy	35	5	8	8	40	16	24	.....
(5) Rape and mustard	207	483	210	1,018	690	1,228	.....	538
(6) Til or jinjili	598	298	2,107	550	896	2,457	.....	1,561
(7) Others	361	363	100	300	724	490	234	.....
XX.—Opium	12	1	4	1	13	5	8	.....
XXI.—Paper and Pasteboard	20	67	38	10	96	48	48	.....
XXII.—Provisions—								
(1) Dried fruits and nuts	410	106	162	109	516	271	245	.....
(2) Ghee	29	120	47	88	149	135	14	.....
(3) Others	153	135	90	408	288	507	.....	219
XXIII.—Railway plant and rolling stock carried for the public and foreign railways—								
(1) Locomotive engines and tenders and parts thereof.	.....	6	.....	3	6	3	3	.....
(2) Carriages and trucks and parts thereof.	.....	.....	.....	21	.....	21	.....	21
(3) Materials—								
(a) Steel rails and fish-plates	1	16	4	15	17	19	.....	2
(b) Sleepers and keys of steel and cast-iron.	.....	.....	57	.....	.....	57	.....	57
(c) Others	219	11,552	1,167	3,801	11,771	5,068	6,703	.....
XXIV.—Salt	3,525	7,411	2,756	5,272	10,936	8,028	2,908	.....
XXV.—Saltpetre and other saline substances—								
(1) Saltpetre	3	1	1	2	4	3	1	.....
(2) Other saline substances ...	37	20	1	10	57	11	46	.....
XXVI.—Silk—								
(1) Raw—								
(a) Foreign	.....	.....	.....	.....	.....	.....	.....	.....
(b) Indian	5	9	5	6	14	11	3	.....
(2) Piece-goods—								
(a) Foreign	.....	.....	.....	.....	.....	.....	.....	.....
(b) Indian	.....	.....	1	.....	.....	1	.....	1
XXVII.—Spices—								
(1) Betelnuts	381	108	210	47	489	257	232	.....
(2) Cardamoms	...	1	.....	1	1	1	.....	.....
(3) Chillies	228	353	35	170	581	205	376	.....
(4) Ginger	4	2	1	1	6	2	4	.....
(5) Pepper	3	... ..	1	2	3	3	.....	.....
(6) Others	273	40	187	80	313	267	46	.....
XXVIII.—Stone and lime	304	3,969	1,067	2,494	4,273	3,561	712	.....
XXIX.—Sugar—								
(1) Refined or crystallized, including sugarcandy.	319	753	253	281	1,072	534	538	.....
(2) Unrefined—								
(a) Sugar	2	.....	....	.....	2	.....	2	.....
(b) Gur, rab, jaggery, molasses, and other saccharine produce.	944	186	290	100	1,130	459	671	.....
XXX.—Tea—								
(1) Foreign	.....	.....	.....	.....	.....	.....	.....	.....
(2) Indian	6	7	5	31	13	36	.....	23
XXXI.—Tobacco—								
(1) Unmanufactured	306	245	433	128	641	555	86	.....
(2) Manufactured—								
(a) Cigars	2	1	1	1	3	2	1	.....
(b) Other sorts	21	17	22	5	38	27	11	.....
XXXII.—Wood—								
(1) Timber, unwrought	1,741	9,554	1,232	1,473	4,295	2,705	1,590	.....
(2) Manufactured	54	71	69	85	125	154	21	.....
XXXIII.—Wool—								
(1) Raw	.....	1	1	1	1	2	.....	1
(2) Manufactured	.....	.....	1	2	.....	3	.....	3
(a) Carpets and rugs	.....	1	1	1	1	2	.....	1
(b) Piece-goods, European ...	.....	.....	.....	.....	.....	.....	.....	.....
(c) „ Indian ...	.....	2	1	1	2	2	.....	.....
(d) Other sorts of manufactures	.....	1	.....	.....	1	.....	1	.....
XXXIV.—All other articles of Merchandise—								
(1) Firewood	1,344	676	1,368	257	2,020	1,625	395	.....
(2) Bamboos	1,318	753	1,079	610	2,071	1,689	382	.....
(3) Mohs	2,398	329	1,003	307	2,727	1,570	1,157	.....
(4) Others	1,078	1,104	828	779	2,182	1,607	575	.....
Total ...	94,303	119,636	63,837	84,281	213,939	148,118	72,403	6,582
Net increase ...	.....	.....	.....	.....	.....	.....	65,821	.....

L. GREENHAM,

CALCUTTA, *the 23rd July 1902.* for *Auditor, Bengal-Nagpur Railway.*

BENGAL CENTRAL RAILWAY COMPANY, LIMITED.

Approximate Return of Traffic and Mileage for the first 12 days of July 1902 on 139 miles open.

	Coaching Traffic.		Merchandise and Mineral Traffic.		Other earnings.	Total earnings.	Traffic Train-miles run.		
	Passengers carried.	Coaching receipts.	Weight carried.	Receipts.			Coaching.	Merchandise.	Total.
	No.	Rs. A. P.	Mds. s.	Rs. A. P.	Rs. A. P.	Rs. A. P.			
Total traffic for first 12 days of July	71,775	27,533 0 0	58,819 0	5,401 0 0	344 0 0	33,278 0 0	5,740	5,300	11,040
Or per mile of railway per week...	322	124 0 0†	247 0	23 0 0	1 0 0	148 0 0	.....	.....	.....
For previous weeks of half-year	.....	.....	.....	.....	.....	.....	.....	.....	.....
Total for 2 weeks ...	71,775	27,533 0 0	58,819 0	5,401 0 0	344 0 0	33,278 0 0	5,740	5,300	11,040
Comparison.									
Total for corresponding first 12 days of previous year ...	75,300	25,353 0 0	89,103 0	6,086 0 0	1,308 0 0	32,747 0 0	6,250	4,618	10,868
Per mile of railway corresponding week of previous year ...	312	105 0 0	345 0	23 0 0	5 0 0	133 0 0	.....	.....	.....
Total to corresponding date of previous year ...	75,300	25,353 0 0	89,103 0	6,086 0 0	1,308 0 0	32,747 0 0	6,250	4,618	10,868

† Coaching traffic calculated on 130 miles only.

ASSAM-BENGAL RAILWAY.

Approximate Return of Traffic for first 12 days of July 1902 on 558 miles open for all descriptions of traffic, and an additional 31 miles for goods and parcels traffic only.

	Coaching Traffic.		Merchandise and Mineral Traffic.		Other earnings.	Total earnings.	Traffic Train-miles run.		
	No. of passengers.	Coaching receipts.	Weight carried.	Receipts.			Coaching.	Merchandise.	Total.
		Rs. A. P.	Mds. s.	Rs. A. P.	Rs. A. P.	Rs. A. P.			
Total traffic for the week ...	57,529	32,446 0 0	2,74,466 0	24,832 0 0	2,686 0 0	59,964 0 0	11,547	14,072	25,619
Or per mile of railway	103·10	58·15	465·98	42·16	4·56	104·87	20·69	23·89	44·58
For previous weeks of half-year	.....	.....	.....	.....	.....	.....	.....	.....	.....
Total for 2 weeks ...	57,529	32,446 0 0	2,74,466 0	24,832 0 0	2,686 0 0	59,964 0 0	11,547	14,072	25,619
Comparison.									
Total for corresponding week of previous year	51,004	29,852 0 0	2,47,611 0	34,458 0 0	4,361 0 0	68,671 0 0	11,805	12,688	24,493
Per mile of railway corresponding week of previous year ...	91·41	53·50	428·39	59·62	7·54	120·66	21·16	21·95	43·11
Total to corresponding date of previous year	51,004	29,852 0 0	2,47,611 0	34,458 0 0	4,361 0 0	68,671 0 0	11,805	12,688	24,493

FINANCIAL YEAR.

Approximate Statement of Gross Receipt of the Assam-Bengal Railway.

Receipts for week ending 12th July 1902.			Receipts for the week ending 13th July 1901.			Total receipts from 1st April 1902 to 12th July 1902.			Total receipts from 1st April 1901 to 13th July 1901.			Total increase in 1902.	Total decrease in 1902.
Mean mileage worked.	Receipts.	Per mile worked.	Mean mileage worked.	Receipts.	Per mile worked.	Mean mileage worked.	Total receipts.	Per mile worked.	Mean mileage worked	Total receipts.	Per mile worked		
	Rs.	Rs.		Rs.	Rs.		Rs.			Rs.		Rs.	Rs.
559	59,964	104·87	578	68,671	120·66	559	5,49,860	...	578	5,89,469	...	.....	39,609

EASTERN BENGAL STATE RAILWAY.

(INCLUDING N. B., K.-D., DACCA AND ASSAM-BEHAR SECTIONS.)

Approximate Return of Traffic and Mileage for the week ended 19th July 1902 on 854 miles open.

	Coaching Traffic.		Merchandise and Mineral Traffic.		Other earnings (including ferry).	Total earnings.	Traffic Train-miles run		
	Number of passengers.	Coaching receipts.	Weight carried.	Receipts.			Coaching.	Merchandise.	Total.
		Rs. A. P.	Mds. s.	Rs. A. P.	Rs. A. P.	Rs. A. P.			
Total traffic for the week ...	238,070	1,12,750 0 0	7,96,870 0	1,31,330 0 0	7,920 0 0	2,42,000 0 0	37,942	32,721	70,663
Or per mile of railway ...	279	132 0 0	933 0	142 0 0	9 0 0*	276 0 0*	...	...	...
For previous 2 weeks of half-year	316,210	1,94,240 0 0	11,33,200 0	1,88,640 0 0	13,260 0 0	3,96,140 0 0	64,776	60,624	125,400
Total for 3 weeks ..	634,280	3,06,990 0 0	19,30,070 0	3,09,970 0 0	21,180 0 0	6,38,140 0 0	102,718	93,345	196,063
COMPARISON.									
Total for corresponding week of previous year	205,630	97,667 0 0	6,65,336 0	92,412 0 0	9,374 0 0	1,99,453 0 0	36,970	31,446	68,416
Per mile of railway corresponding week of previous year ..	241	115 0 0	779 0	106 0 0	3 0 0	226 0 0	...	...	...
Total to corresponding date of previous year	657,004	3,87,401 0 0	19,43,592 0	2,79,583 0 0	23,927 0 0	5,90,931 0 0	104,076	91,931	196,007

* Excluding ferry earnings.

N.B.—Increase is due to the return journey over this Railway of the pilgrims from Puri and to the jute, grain, and pulse traffic.

BRAHMAPUTRA-SULTANPUR RAILWAY.

Approximate Return of Traffic and Mileage for the week ended 19th July 1902 on 59·19 miles open.

	Coaching Traffic.		Merchandise and Mineral Traffic.		Other earnings (including ferry).	Total earnings.	Traffic Train-miles run.		
	No. of passengers.	Coaching receipts.	Weight carried.	Receipts.			Coaching.	Merchandise.	Total.
		Rs. A. P.	Mds. s.	Rs. A. P.	Rs. A. P.	Rs. A. P.			
Total traffic for the week ...	6,280	1,000 0 0	17,700 0	1,760 0 0	60 0 0	3,720 0 0	1,048	1,172	2,220
Or per mile of railway	106	32 0 0	299 0	30 0 0	1 0 0	63 0 0	...	...	...
For previous 2 weeks of half-year	11,040	3,590 0 0	16,900 0	1,740 0 0	90 0 0	5,420 0 0	1,932	948	2,880
Total for 3 weeks ...	18,220	5,490 0 0	34,600 0	3,500 0 0	150 0 0	9,140 0 0	2,980	2,120	5,100
COMPARISON.									
Total for corresponding week of previous year	6,328	1,502 0 0	13,490 0	1,210 0 0	18 0 0	3,030 0 0	760	1,494	2,254
Per mile of railway corresponding week of previous year	107	31 0 0	239 0	20 0 0	...	51 0 0	...	...	...
Total to corresponding date of previous year	17,462	4,918 0 0	35,704 0	3,141 0 0	63 0 0	8,122 0 0	2,755	3,919	6,674

MYMENSINGH-JAGANNATHGANJ RAILWAY.

Approximate Return of Traffic and Mileage for the week ended 19th July 1902 on 53·37 miles open.

	Coaching Traffic.		Merchandise and Mineral Traffic.		Other earnings (including ferry).	Total earnings.	Traffic Train-miles run.		
	Number of passengers.	Coaching receipts.	Weight carried.	Receipts.			Coaching.	Merchandise.	Total.
		Rs. A. P.	Mds. s.	Rs. A. P.	Rs. A. P.	Rs. A. P.			
Total traffic for the week ...	7,410	2,180 0 0	7,320 0	370 0 0	20 0 0	2,570 0 0	1,270	914	2,184
Or per mile of railway ...	139	41 0 0	137 0	7 0 0	.....	48 0 0	...	...	...
For previous 2 weeks of half-year	13,360	3,720 0 0	9,860 0	650 0 0	30 0 0	4,400 0 0	1,902	1,488	3,390
Total for 3 weeks ...	20,770	5,900 0 0	17,180 0 0	1,020 0 0	50 0 0	6,970 0 0	3,262	2,402	5,604
COMPARISON.									
Total for corresponding week of previous year	7,871	2,030 0 0	2,963 0	262 0 0	15 0 0	2,247 0 0	1,234	344	1,578
Per mile of railway corresponding week of previous year ...	147	38 0 0	56 0	4 0 0	...	42 0 0	...	...	...
Total to corresponding date of previous year	21,158	5,754 0 0	8,491 0	550 0 0	37 0 0	6,377 0 0	3,478	2,206	5,684

DACCA STATE RAILWAY.

Approximate Return of Traffic and Mileage for the week ended 19th July 1902 on 86 miles open.

	Coaching Traffic.		Merchandise and Mineral Traffic.		Other earnings.	Total earnings.	Traffic Train-miles run.		
	Number of passengers.	Coaching receipts.	Weight carried.	Receipts.			Coaching.	Merchandise.	Total.
		Rs. A. P.	Mds. S.	Rs. A. P.	Rs. A. P.	Rs. A. P.			
Total traffic for the week	20,340	7,270 0 0	10,250 0	1,100 0 0	270 0 0	8,640 0 0	2,776	1,532	4,308
Or per mile of railway	336	84 0 0	119 0	13 0 0	3 0 0	100 0 0	...	...	...
For previous 2 weeks of half-year	53,350	13,710 0 0	22,900 0	2,330 0 0	341 0 0	16,381 0 0	5,500	2,880	8,380
Total for 3 weeks ...	79,690	20,980 0 0	33,150 0 0	3,430 0 0	610 0 0	25,020 0 0	8,276	4,412	12,688
Comparison.									
Total for corresponding week of previous year	27,533	7,067 0 0	12,000 0	1,325 0 0	34 0 0	8,426 0 0	2,850	2,370	5,220
Per mile of railway corresponding week of previous year ...	320	82 0 0	140 0	16 0 0	... ..	98 0 0	.	.	...
Total to corresponding date of previous year	74,530	20,444 0 0	32,100 0	4,292 0 0	264 0 0	25,000 0 0	8,394	5,777	14,171

COOCH BEHAR STATE RAILWAY.

Approximate Return of Traffic and Mileage for the week ended 19th July 1902 on 33·78 miles open.

	Coaching Traffic.		Merchandise and Mineral Traffic.		Other earnings (including ferry).	Total earnings.	Traffic train-miles run.		
	Number of passengers.	Coaching receipts.	Weight carried.	Receipts.			Coaching.	Merchandise.	Total.
		Rs. A. P.	Mds. S.	Rs. A. P.	Rs. A. P.	Rs. A. P.			
Total traffic for the week	2,650	940 0 0	5,620 0	830 0 0	20 0 0	1,790 0 0	316	2,260*	2,576*
Or per mile of railway	78	28 0 0	166 0	25 0 0	.....	53 0 0	.....	.....	.....
For previous 2 weeks of half-year	4,980	1,730 0 0	12,630 0	1,560 0 0	30 0 0	3,320 0 0	552	2,748	3,300
Total for 3 weeks ...	7,630	2,670 0 0	18,250 0 0	2,390 0 0	50 0 0	5,110 0 0	868	5,008	5,876
Comparison.									
Total for corresponding week of previous year	1,976	723 0 0	3,914 0	533 0 0	131 0 0	1,387 0 0	217	287	504
Per mile of railway corresponding week of previous year	58	21 0 0	116 0	16 0 0	.....	37 0 0	.....	.....	.....
Total to corresponding date of previous year	5,738	2,068 0 0	13,664 0	1,652 0 0	398 0 0	4,118 0 0	608	1,006	1,614

* Including ballast train-miles 2,100.

BENGAL AND NORTH-WESTERN RAILWAY.

Approximate Return of Traffic for the week ending 19th July 1902 on 1,262 miles open.

	Coaching Traffic.		Merchandise and Mineral Traffic.		Other earnings (estimated), including steam-boat.	Total earnings.	Traffic Train-miles run.		
	No. of passengers.	Receipts.	Weight carried.	Receipts.			Coaching.	Merchandise.	Total
		Rs.	Mds.	Rs	Rs.	Rs			
Total traffic for the week on 1,262 miles open	197,060	(a)76,700	6,03,360	(b) 54,710	20,760	(b)1,52,170	41,886	(c)31,288	73,174
Or per mile of railway ...	156·15	60·78	478·10	43 35	16·45	120·58	.....	.....	.....
For previous 1½ weeks of half-year	347,330	1,41,920	1,008,390	1,30,740	27,870	3,00,530	70,207	53,993	124,200
Total for 2½ weeks	544,390	2,18,620	1,701,750	1,85,450	48,630	4,52,700	1,12,153	85,281	197,434
Comparison.									
Total for corresponding week of previous year on 1,251 miles open	180,449	70,975	5,56,423	70,471	15,452	1,56,898	35,119	(d)32,321	67,440
Per mile of corresponding week of previous year	144·24	56·74	444 78	56 31	12 35	125·42	.. ..	....	.....
Total to corresponding date of previous year	256,510	2,05,855	17,58,002	2,21,039	48,613	4,75,517	96,489	87,920	184,409

(a) Increase due to increased mileage and improved traffic generally.
(b) Increase in weight with decreased amount is due to shorter lead.
(c) Includes 5,556 miles of ballast trains run on open line.
(d) ,, 9,450 ,, ,, ,,

SEGOWLIE-RAKSAUL BRANCH RAILWAY.

(WORKED BY THE B. & N.-W. RAILWAY.)

Approximate Return of Traffic for the week ending 19th July 1902 on 18 miles open.

	Coaching Traffic.		Merchandise and Mineral Traffic.		Other earnings (estimated).	Total earnings.	Traffic Train-miles run.		
	Passengers carried.	Receipts.	Weight carried.	Receipts.			Coaching.	Merchandise.	Total.
	No.	Rs.	Mds.	Rs.	Rs.	Rs.			
Total traffic for the week on 18 miles open	1,338	103	11,851	250	5	448	369	135	504
Or per mile of railway	74·33	10·72	658·39	13·89	0·28	24·89	.....	.....	.....
For previous 1½ weeks of half-year	2,646	380	21,767	466	6	852	604	260	864
Total for 2½ weeks ...	3,984	583	33,618	716	11	1,310	973	395	1,368
COMPARISON.									
Total for corresponding week of previous year on 18 miles open	2,214	342	8,554	250	34	626	412	93	504
Per mile of corresponding week of previous year	123·00	18·98	475·22	13·91	1·91	34·80	.....	.....	.....
Total to corresponding date of previous year	6,031	955	24,369	736	47	1,738	1,178	262	1,440

BENGAL CENTRAL RAILWAY COMPANY, LIMITED.

Approximate Return of Traffic and Mileage for the week ended 19th July 1902 on 139 miles open.

	Coaching Traffic.		Merchandise and Mineral Traffic.		Other earnings.	Total earnings.	Traffic Train-miles run.		
	Number of passengers.	Coaching receipts.	Weight carried.	Receipts.			Coaching.	Merchandise.	Total.
		Rs. A. P.	Mds. s.	Rs. A. P.	Rs. A. P.	Rs. A. P.			
Total traffic for the week ...	33,761	15,302 0 0	53,075 0	3,247 0 0	60 0 0	18,609 0 0	3,354	2,451	5,805
Or per mile of railway	260	118 0 0†	382 0	23 0 0	.....	141 0 0	.....	.....	.....
For previous 2 weeks of half-year	71,775	27,533 0 0	58,819 0	5,401 0 0	344 0 0	33,278 0 0	5,740	5,300	11,040
Total for 3 weeks ...	105,536	42,835 0 0	111,894 0	8,648 0 0	404 0 0	51,977 0 0	9,094	7,751	16,845
COMPARISON.									
Total for corresponding week of previous year	20,601	11,072 0 0	50,687 0	4,419 0 0	81 0 0	15,572 0 0	3,284	2,846	6,130
Per mile of railway corresponding week of previous year ...	227	85 0 0	365 0	32 0 0	1 0 0	118 0 0	.....	.....	.....
Total to corresponding date of previous year	104,901	36,425 0 0	139,780 0	10,506 0 0	1,389 0 0	48 320 0 0	9,534	7,104	16,638

† Coaching traffic calculated on 130 miles only.

DARJEELING-HIMALAYAN RAILWAY COMPANY, LIMITED.

		Rs. A. P.	Rs. A. P.
Approximate earnings for the week ending 19th July 1902 ...	Coaching ...	3,279 0 0	10,843 0 0
	Goods ...	7,514 0 0	
	Other earnings ...	50 0 0	
Audited earnings for the corresponding period of 1901 ...	Coaching ...	3,121 0 0	10,555 0 0
	Goods ...	7,381 0 0	
	Other earnings ...	53 0 0	
Increase ...			288 0 0
Receipts per mile for the week ending 19th July 1902			212 9 9
Ditto for the corresponding period of 1901			206 15 4
Increase ...			5 10 5
Receipts from 1st July to 19th July 1902			43,715 0 0
Ditto for the corresponding period of 1901			43,186 0 0
Increase ...			529 0 0

Printed at the Printing Office, and published by the Book Depôt, of the Bengal Secretariat, Writers' Buildings, in the City of Calcutta, on 30th July 1902.

REGISTERED No. C209.] No. 32 of 1902.

The Calcutta Gazette.

WEDNESDAY, AUGUST 6, 1902.

CONTENTS

	Page
PART I.—Orders and Notifications by the Lieutenant-Governor of Bengal, the High Court, Government Treasury, &c.	1077—1099
PART IA.—Orders and Notifications by the Government of India	127—128
PART IB.—Orders by the Lieutenant-Governor of Bengal	149—150
PART II.—Advertisements	961—984
PART III.—Acts of the Bengal Council	*Nil*
PART IV.—Bills of the Bengal Council:—	
Report of the Select Committee together with the Bill to amend the Bengal Drainage Act, 1880 .	9—17
PART IVA.—Proceedings of the Bengal Legislative Council	*Nil*
PRT V.—Acts of the Governor-General's Council assented to by the Governor-General ...	*Nil*
PART VI.—Bills introduced into the Council of the Governor-General for making Laws and Regulations or published under Rule 23	*Nil*
APPENDIX —Marine Notifications	299—306
SUPPLEMENT No. 32:—	
Resolution reviewing the Triennial Report on Vaccination in Bengal for the years 1899-1900, 1900-1901, and 1901-1902 ...	1121
Statistical Return of Crops, Prices Current, Irrigation Operation, Abstract of Major and Minor Works, Circular and Eastern Canal, Results of Meteorological Observations, Railway Traffic Receipts, &c., &c.	1126—1144

PART I

Orders and Notifications by the Lieutenant-Governor of Bengal, the High Court, Government Treasury, &c.

ORDERS BY THE LIEUT.-GOVERNOR OF BENGAL.

NOTIFICATION—No. 24P.R.T.

"*The Rhotas*" *on tour, the 31st July 1902.*—Divine Service will be held at St. Paul's Cathedral, Calcutta, at 11 A.M. on Saturday, the 9th August 1902, the day appointed for the Coronation of His Most Gracious Majesty King Edward VII, Emperor of India.

The arrangements for the service will be made by the Cathedral authorities. The Lieutenant-Governor of Bengal will attend, and all officers of Government in the Civil Departments are invited to be present. Full dress will be worn by officers entitled to wear uniform; morning dress by gentlemen not entitled to wear uniform.

By order of the Lieutenant-Governor of Bengal,

C. E. BUCKLAND,

Chief Secretary to the Government of Bengal.

TOUR OF HIS HONOUR THE LIEUTENANT-GOVERNOR OF BENGAL DURING AUGUST 1902.

Miles (by rail).	Day of the— Week.	Month.	Place.	Time (Railway time).	Remarks.
	Wednesday	Aug. 6th	Berhampur... dep.	5-30	Anchor off Krishnagar at night.
	Thursday	„ 7th	Halt.		
	Friday	„ 8th	Krishnagar dep.	5-30	
473			Calcutta ... arr.	...	Land at Takta Ghat some time during the afternoon. Arrival private.

NOTE.—The party accompanying His Honour will be—

Lady Woodburn ... ...
Miss Woodburn ... ...
The Hon'ble Mr. C. E. Buckland, C.I.E., Chief Secretary to Government.
Major Strachey, Private Secretary ...
Captain Bignell, Aide-de-Camp ...
Mrs. Lord, Housekeeper ...
An English maid ... ...
Three clerks, Private Secretary's Office ...
About 20 servants ... ...
The Postmaster, Lieutenant-Governor's Camp Post Office.
} Throughout the tour.

Mr. D. B. Horn, Secretary to Government, Public Works Department ... From Godagiri to Berhampur.

The Hon'ble Mr Bourdillon, C.S.I., Member of the Board of Revenue, and Mrs. Bourdillon ... ... At Malda.

Captain Anderson, I.M.S., and a Hospital Assistant ... ... From Goalundo to Calcutta.

The usual salute will be fired on His Honour's arrival at Calcutta.

DARJEELING,
The 6th July 1902.

J. STRACHEY, MAJOR,
Private Secy. to the Lieut.-Govr. of Bengal.

No. 3377A.

APPOINTMENTS AND TRANSFERS.

GENERAL.—*No. 3263A.—The 31st July 1902.*—Mr. E. Geake, Magistrate and Collector, Chittagong, is appointed to act as District and Sessions Judge of that district, and also in the second grade of District and Sessions Judges, during the absence, on leave, of Mr. H. E. Ransom, or until further orders.

Chittagong.

No. 3266A.—The 31st July 1902.—Mr. P. E. Cammiade, Officiating Joint-Magistrate and Deputy Collector, Chandpur, Tippera, is appointed to act as Magistrate and Collector, Chittagong, during the absence, on deputation, of Mr. E. Geake, or until further orders.

Tippera.
Chittagong.

No. 3268A.—The 31st July 1902.—Mr. J. Vas, Officiating Joint-Magistrate and Deputy Collector, Tippera, is appointed to have charge of the Chandpur subdivision of that district, during the absence, on deputation, of Mr. P. E. Cammiade, or until further orders.

Tippera.

No. 3304A.—The 2nd August 1902.—Mr. H. P. Duval, Officiating Joint-Magistrate and Deputy Collector, Serampore, Hooghly, is appointed to act as Deputy Chairman of the Corporation of Calcutta, during the absence, on leave, of Mr. J. R. Blackwood, or until further orders.

Hooghly.
Calcutta.

No. 3326A.—The 4th August 1902.—Mr. H. A. Lane, Deputy Magistrate and Deputy Collector, on leave, is posted to the head-quarters station of the Singhbhum district.

Singhbhum.

No. 3331A.—The 4th August 1902.—Babu Nogendra Nath Mitter, Deputy Magistrate and Deputy Collector, on leave, is posted to the head-quarters station of the Dacca district.
Dacca.

No. 3333A.—The 4th August 1902.—Babu Harendra Kumar Ghose, Deputy Magistrate and Deputy Collector, Dacca, is transferred to the head-quarters station of the Chittagong district.
Dacca.
Chittagong.

No. 3335A.—The 4th August 1902.—Babu Sures Chandra Chatterji, Deputy Magistrate and Deputy Collector, on leave, is posted to the head-quarters station of the Dacca district.
Dacca.

No. 3337A.—The 4th August 1902.—Babu Kali Sanker Sen, Deputy Magistrate and Deputy Collector, Dacca, is transferred to the head-quarters station of the Jalpaiguri district.
Dacca.
Jalpaiguri.

No. 3343A.—The 4th August 1902.—Babu Ganendra Nath Pal, Deputy Magistrate and Deputy Collector, Nadia, is transferred to the head-quarters station of the 24-Parganas district.
Nadia.
24-Parganas.

No. 3349A.—The 5th August 1902.—Mr. A. W. Botham, Officiating Joint-Magistrate and Deputy Collector, Rampur Hât, Birbhum, is appointed to have charge of the Serampore subdivision of the district of Hooghly, during the absence, on deputation, of Mr. H. P. Duval, or until further orders.
Birbhum.
Hooghly.

No. 351A.—The 5th August 1902.—Mr. A. J. Lainé, Assistant Magistrate and Collector, Monghyr, is appointed to have charge of the Rampur Hât subdivision of the district of Birbhum, during the absence, on deputation, of Mr. A. W. Botham, or until further orders.
Monghyr.
Birbhum.

No. 3360A.—The 5th August 1902.—Maulvi Abdus Samad, Deputy Magistrate and Deputy Collector, is posted to the head-quarters station of the district of Manbhum.
Manbhum.

No. 3369A.—The 5th August 1902.—Mr. Jnanendra Nath Roy, Officiating Joint-Magistrate and Deputy Collector, Kurigaon, Rangpur, is appointed to act as Magistrate and Collector, Dinajpur, during the absence, on leave, of Mr. J. H. E. Garrett, or until further orders.
Rangpur.
Dinajpur.

No. 3371A.—The 5th August 1902.—Babu Jadu Nath Sarkar, Deputy Magistrate and Deputy Collector, Rangpur, is appointed to have charge of the Kurigaon subdivision of that district, during the absence, on deputation, of Mr. Jnanendra Nath Roy, or until further orders.
Rangpur.

POLICE.—*No. 3312A.—The 2nd August 1902.*—Mr. R. J. Hirst, Probationary Assistant Superintendent of Police, Monghyr, is transferred to Bhagalpur.
Monghyr.
Bhagalpur.

No. 3314A.—The 2nd August 1902.—Mr. W. A. Knyvett, Probationary Assistant Superintendent Police, Saran, is transferred to Bhagalpur.
Saran.
Bhagalpur.

No. 3316A.—The 2nd August 1902.—Mr. M. L. A. Luffman, Probationary Assistant Superintendent of Police, Patna, is transferred to Bhagalpur.
Patna.
Bhagalpur.

No. 3347A.—The 5th August 1902.—Maulvi Jannat Hosain Khan, Khan Bahadur, District Superintendent of Police, Balasore, on leave, is appointed to act as District Superintendent of Police, Monghyr, during the absence, on leave, of Mr. W. H. Cornish, or until further orders.
Balasore.
Monghyr.

PROMOTIONS.

GENERAL.—*No. 3281A.—The 1st August 1902.*—The following acting appointments are sanctioned in the grades of Magistrates and Collectors until further orders:—

To act in the first grade.

Mr. Ahsanuddin Ahmad, with effect from the 27th June 1902, *vice* Mr. E. F. Growse, on deputation.

„ C. J. Stevenson-Moore, with effect from the afternoon of the 17th July 1902, *vice* Mr. E. B Harris, on privilege leave.

„ E. V. Levinge, with effect from the afternoon of the 21st July 1902, *vice* Mr. W. Maude, appointed to act as Judicial Commissioner, Chota Nagpur.

To act in the second grade.

Mr. F. R. Roe, with effect from the 27th June 1902, *vice* Mr. Ahsanuddin Ahmad.

„ W. N. Delevingne, with effect from the afternoon of the 15th July 1902, *vice* Mr. C. H. Bompas, on privilege leave.

„ H. D deM. Carey, with effect from the afternoon of the 17th July 1902, *vice* Mr. C J. Stevenson-Moore.

„ Satis Chandra Mukerjee, with effect from the afternoon of the 21st July 1902, *vice* Mr. E. V. Levinge.

LEAVE.

GENERAL.—*No. 3260A.—The 31st July 1902.*—Mr. H. E. Ransom, District and Sessions Judge, Chittagong, is allowed leave for one month and twenty-six days, under article 291 of the Civil Service Regulations, with effect from the afternoon of the 4th August 1902.

Chittagong.

No. 3299A.—The 2nd August 1902.—Mr. E. L L. Hammond, I.C.S., is allowed combined leave for six months, with effect from the afternoon of the 23rd April 1902, viz., privilege leave for three months under article 264A of the Civil Service Regulations, and special leave for the remaining period under article 348 of the Regulations.

No. 3324A.—The 4th August 1902.—Mr. J. S. Mackay, Deputy Magistrate and Deputy Collector, Singhbhum, is allowed leave for three months, under article 291 of the Civil Service Regulations, with effect from the 26th August 1902, or any subsequent date on which he may avail himself of it.

Singhbhum.

No 3339A.—The 4th August 1902.—Babu Suresh Chunder Sarkar, Deputy Magistrate and Deputy Collector, Chittagong, is allowed leave for two months and eight days, under article 291 of the Civil Service Regulations, with effect from the 15th July 1902.

Chittagong.

No. 3341A.—The 4th August 1902.—Babu Jyotish Chunder Sen, Deputy Magistrate and Deputy Collector, Jalpaiguri, is allowed leave for three months, under article 291 of the Civil Service Regulations, with effect from the date on which he may avail himself of it

Jalpaiguri.

No. 3358A.—The 5th August 1902.—Babu Ram Niranjan Prosad, Deputy Magistrate and Deputy Collector, Manbhum, is allowed leave for three months, under article 291 of the Civil Service Regulations, with effect from the 6th August 1902, or any subsequent date on which he may avail himself of it.

Manbhum.

No. 3368A.—The 5th August 1902.—Captain T. S Barton, Indian Staff Corps, who has been granted combined leave for one year and three months, made over charge of the office of Cantonment Magistrate of Barrackpore and Dum-Dum to Major G. A. Welman, 13th Madras Infantry, on the forenoon of the 21st July 1902.

24-Parganas.

POLICE.—*No. 3345A.—The 5th August 1902.*—Mr. W. H. Cornish, Officiating District Superintendent of Police, Monghyr, is allowed leave for three months, under article 291 of the Civil Service Regulations, with effect from the 6th August 1902.

Monghyr.

The following order is republished from the *Assam Gazette* :—

No. 6064G.—The 30th July 1902 —With effect from the 15th August 1902, the undermentioned officers are placed on special duty to constitute the Provincial Committee in connection with the inquiry into the administration of the Police in British India :—

Mr. D. H. Lees, I.C.S., Deputy Commissioner, Sylhet.
„ E. Muspratt, District Superintendent of Police, Sibsagar.

C. E. BUCKLAND,
Chief Secy. to the Govt. of Bengal.

NOTIFICATION—No. 3353A.

The 5th August 1902.—The undermentioned Officers having passed an examination in the Munda language, in accordance with the rules laid down in Appendix VI to the Rules for the Departmental Examination of Assistant Magistrates and others, dated the 28th May 1895, are each authorised to draw the prescribed reward of Rs. 1,000 (one thousand) :—

Ranchi.

Mr. W. S. Coutts, Officiating Deputy Commissioner, Ranchi.
Babu Hari Pada Bhattacharjya, Deputy Magistrate and Deputy Collector, Ranchi.
„ Charu Chunder Chatterjee, Deputy Magistrate and Deputy Collector, Ranchi.

C. E. BUCKLAND,
Chief Secy. to the Govt. of Bengal.

REVENUE DEPARTMENT—(FORESTS).

NOTIFICATION—No. 2954For.

The 1st August 1902.—Under section 71 of the Indian Forest Act (VII of 1878, as amended by Act V of 1890), Mr. H. D. D. French, Deputy Conservator of Forests, in charge of the Sonthal Parganas Forest Division, is vested with the powers specified in clauses (*c*) and (*d*) of that section.

Sonthal Parganas and Hazaribagh.

W. C. MACPHERSON,
Offg. Secy. to the Govt. of Bengal.

NOTIFICATION—No. 2983For.

The 4th August 1902.—The Notification No. 449For., dated the 23rd January 1894, published at pages 79 and 80 of the *Calcutta Gazette* of the 24th idem, proposing to constitute certain tracts of lands in the Chittagong district as "Reserved Forests" under section 4 of the Indian Forest Act, VII of 1878, is hereby cancelled, so far as the Deang Range is concerned.

Chittagong.

W. C. MACPHERSON,
Offg. Secy. to the Govt. of Bengal.

REVENUE DEPARTMENT—(OPIUM).

NOTIFICATION—No. 2979O.

The 4th August 1902.—Mr. G. C. R. Nicholson, Officiating Factory Superintendent, Patna, is appointed to act as Senior Factory Superintendent, during the absence, on leave, of Mr. G. M. Gregory, or until further orders.

Patna.

W. C. MACPHERSON,
Offg. Secy. to the Govt. of Bengal.

REVENUE DEPARTMENT—(LAND REVENUE).

NOTIFICATION—No. 2953L.R.

The 30th July 1902.—Mr. J. C. Jack, I.C.S., Assistant Settlement Officer, Backergunge, on leave, reported his departure from India on the afternoon of the 28th June 1902.

Backergunge.

W. C. MACPHERSON,
Offg. Secy. to the Govt. of Bengal.

NOTIFICATION—No. 2977L.R.

The 4th August 1902.—Mr. H. Coupland, I.C.S., Settlement Officer, South Bihar, is granted privilege leave for one day, under article 291 of the Civil Service Regulations, in extension of the leave granted in Notification No. 1183T.R., dated the 21st June 1902.

Patna, Gaya, and Shahabad.

W. C. MACPHERSON,
Offg. Secy. to the Govt. of Bengal.

NOTIFICATION—No. 2980L.R.

The 4th August 1902.—Babu Sris Chandra Basu, Assistant Settlement Officer, North Bihar, is granted privilege leave for two months, under article 291 of the Civil Service Regulations, with effect from the date on which he may be relieved of his Settlement duties

Darbhanga, Monghyr, and Purnea.

W. C. MACPHERSON,
Offg. Secy. to the Govt. of Bengal.

NOTIFICATION—No. 2985L.R.

The 4th August 1902.—Mr. P. M. Robertson, Assistant Settlement Officer, Sonthal Parganas, is granted privilege leave for one month, under article 291 of the Civil Service Regulations, with effect from the date on which he is relieved of his present duties.

Sonthal Parganas.

W. C. MACPHERSON,
Offg. Secy. to the Govt. of Bengal.

DECLARATION—No. 3003.

The 5th August 1902.—Whereas it appears to the Lieutenant-Governor of Bengal that land is required to be taken by Government at the public expense for a public purpose, viz., for a Post Office at Ishnapur, in the village of Bishunpura, pargana Goa, zilla Saran, it is hereby declared that for the above purpose a piece of land measuring, more or less, 5 cottahs of standard measurement, bounded on the—

Saran.

East—By the field of Mewa Sah,
West } —By the field of Bulaki Rai,
North }
South—By the field and garden of Bulaki Rai,

is required within the aforesaid village of Bishunpura.

This declaration is made, under the provisions of section 6 of Act I of 1894, to all whom it may concern.

A plan of the land may be inspected in the office of the Land Acquisition Deputy Collector, Chapra.

W. C. MACPHERSON,
Offg. Secy. to the Govt. of Bengal.

NOTIFICATION.

UNDER the provisions of section 2 of Act VI of 1876, as amended by Act V of 1884, the Manager of the Encumbered Estates, Palamau, is appointed to be the Manager, and the management is vested in him, of the undermentioned immoveable property of Thakur Syama Charan Singha, of Karar, in the district of Palamau, and of any other immoveable property to which the said holder is entitled in his own right, or which he is entitled to redeem, or which may be acquired by or devolve on him or his heirs during the continuance of such management :—

Name of estate.	Name of holder.
Karar estate, having shares in 31 villages in Palamau.	Thakur Syama Charan Singha.

F. A. SLACKE, *Offg. Commissioner.*

COMMR.'S OFFICE, CAMP HAZARIBAGH, *the 16th July 1902.*

GENERAL DEPARTMENT—(EDUCATION).

DECLARATION—No 2468.

The 5th August 1902—Whereas it appears to the Lieutenant-Governor of Bengal that land is required to be taken up by Government at the public expense for a public purpose, viz., for a Primary School at Mahrajganj, in the village of Gangan Pasnowli, pargana Bara, zilla Saran, it is hereby declared that for the above purpose a piece of land measuring, more or less, 2 cottahs of standard measurement, bounded on the east by the field of Manik Ram, on the west by public road, on the north by lane and gola of Halkhori Ram, and on the south by gola of Lachhmin Narain and Khendhari Rai, is required within the aforesaid village of Gangan Pasnowli.

Saran.

This declaration is made, under the provisions of section 6 of Act I of 1894, to all whom it may concern.

A plan of the land may be inspected in the office of the Land Acquisition Deputy Collector, Chapra.

W. C. MACPHERSON,
Offg. Secy. to the Govt. of Bengal.

GENERAL DEPARTMENT—(MISCELLANEOUS.

DECLARATION—No. 2467.

The 5th August 1902.—Whereas it appears to the Lieutenant-Governor of Bengal that land is required to be taken by Government at the public expense for a public purpose, viz, for a post-office at Anara, in the village of Chapari's Chak, Shampur, pargana Para, zilla Manbhum, it is hereby declared that for the above purpose a piece of land measuring, more or less, 10 cottahs of standard measurement, bounded on the north by road, on the south by waste land of Jolessur Chakerbutty and others, on the east by waste land of Jolessur Chakerbutty and others with a hut built by Kangal Ghunia, and on the west by waste land of Jolessur Chakerbutty and others, is required within the aforesaid village of Chapari's Chak, Shampur.

Manbhum.

This declaration is made, under the provisions of section 6 of Act I of 1894, to all whom it may concern.

A plan of the land may be inspected in the office of the Deputy Commissioner of Manbhum.

W. C. MACPHERSON,
Offg. Secy. to the Govt. of Bengal.

FINANCIAL DEPARTMENT.

NOTIFICATION—No. 3720S.R.

The 5th August 1902.—Babu Debendra Kumar Mitra, Deputy Collector, is appointed Deputy Collector of Income-tax in the district of Malda, *vice* Babu Nagendra Chandra Sen, and under section 40 of Act II of 1886 is vested with the powers of a Collector under the Act.

Malda.

E. W. COLLIN,
Offg Secy. to the Govt. of Bengal.

FINANCIAL DEPARTMENT—(MISCELLANEOUS).

NOTIFICATION—No. 3793 Mis.

The 5th August 1902.—Mr. C. F. Manson, Superintendent of Stamps and Stationery, Calcutta, is granted privilege leave for one and a half months, under articles 291 and 377 of the Civil Service Regulations, with effect from the 11th August 1902, or such subsequent date as he may avail himself of it.

Calcutta.

E. W. COLLIN,
Offg. Secy. to the Govt. of Bengal.

MEDICAL DEPARTMENT.

No. 1954Med.—The 29th July 1902.—Captain J. H. Hugo, I.M.S., was on general duty at the Presidency from the 5th to the 10th January 1902.

Calcutta.

No. 1988Med.—The 31st July 1902.—Captain S. Anderson, I.M S., was on general duty at the Presidency from the 7th to the 21st May 1902.

Calcutta.

No. 1990Med.—The 31st July 1902.—Captain S. Anderson, I.M S., is appointed, with effect from the forenoon of the 22nd May 1902, to act as Deputy Sanitary Commissioner, Metropolitan and Eastern Bengal Circle, until further orders.

Calcutta.

No. 1992Med.—The 31st July 1902.—Captain H. B. Meakin, I.M.S., was on general duty at the Presidency on the 8th May 1902.

Calcutta.

No. 1994Med.—The 31st July 1902.—Captain H. B. Meakin, I.M.S., is appointed, with effect from the forenoon of the 9th May 1902, to act as Second Surgeon, Presidency General Hospital, Calcutta, until further orders.

Calcutta.

No. 1997Med.—The 31st July 1902.—Captain J. W. F Rait, I.M.S., was on general duty at the Presidency from the 9th to the 15th May 1902.

Calcutta.

No. 1999Med.—The 31st July 1902.—Captain J. W. F. Rait, I.M S., is appointed, with effect from the forenoon of the 16th May 1902, to act as Resident Medical Officer, Medical College Hospital, until further orders.

Calcutta.

No. 2001Med.—The 31st July 1902.—Captain H. Innes, I.M S., is appointed, with effect from the forenoon of the 4th June 1902, to act as Civil Surgeon of Hooghly, during the absence, on leave, of Lieutenant-Colonel D. G. Crawford, I.M.S., or until further orders.

Hooghly.

E. W. COLLIN,
Offg. Secy. to the Govt. of Bengal

CHARITABLE ENDOWMENTS ACT, 1890.

NOTIFICATION—No. 2036Medl.

The 4th August 1902.—Whereas by Notification No. 1688Medl., dated the 10th April 1894, published at page 74, Part IB of the *Calcutta Gazette*, dated the 11th April 1894, after reciting that in or about the month of November 1891, Syed Mahomed Mehdi Hossein Khan, of Patna, had placed at the disposal of the Government of Bengal the sum of Rs. 10,000 to be applied to some public and charitable object in the city of Patna; and reciting that it had been resolved by the Government of Bengal that the said sum should, in the first instance, be devoted to the creation of an endowment to provide funds for the payment of the salary of the lady doctor to be employed in the female ward of the Temple Hospital at Patna, and that the said sum should be invested in the purchase of securities which should be vested in the Treasurer of Charitable Endowments for the territories subject to the Government of Bengal in manner thereinafter appearing; and reciting that the said sum with accumulations of interest thereon to the date of the said Notification had accordingly been invested in the purchase of the two several Calcutta Municipal Debentures, of which particulars are contained in Part I of the first Schedule hereunder written, it was notified that the Lieutenant-Governor

of Bengal, in exercise of the power conferred by sections 4 and 5 of the Charitable Endowments Act, 1890, did thereby order and direct that the said two several Calcutta Municipal Debentures should, as from the date of the first publication in the *Calcutta Gazette* of the said Notification, vest and be thenceforth vested in the Treasurer of Charitable Endowments for the territories subject to the Government of Bengal, to be held by him and his successors subject to the provisions of the Charitable Endowments Act, 1890, and any rules from time to time framed thereunder by the Governor-General in Council upon trust (until the Local Government, in exercise of the powers conferred by the Charitable Endowments Act, 1890, should direct the expenditure of the Trust Fund in building a separate hospital for women at Patna, or its application to some other purposes of a similar nature, and should in consequence frame a new scheme) to receive the interest of the said securities when and as the same should become due and payable and from time to time to apply the same in terms of the scheme for the creation of an endowment for the payment of the salary of a lady doctor to be employed in the female ward of the Temple Hospital at Patna, of which scheme particulars were contained in the second Schedule to the said Notification: AND WHEREAS accumulations having resulted of the surplus interest of the securities vested by the said recited Notification, the same have been invested in the purchase of the Calcutta Municipal Debenture, of which particulars are contained in Part II of the first Schedule hereunder written, and it has been resolved that the said last-mentioned security shall be vested in the said Treasurer of Charitable Endowments upon the same trusts as are declared by the recited Notification of and concerning the said two several securities therein comprised: AND WHEREAS it is necessary that modifications should accordingly be effected in the said scheme, of which particulars were contained in the second Schedule to the said recited Notification: IT IS HEREBY NOTIFIED that the Lieutenant-Governor of Bengal, in exercise of the powers conferred by sections 4 and 5 of the Charitable Endowments Act, 1890, doth hereby order and direct that in place of the said scheme, of which particulars were contained in the second Schedule to the said recited Notification, there shall be substituted the modified scheme, of which particulars are contained in the second Schedule hereunder written, and that the said two several Calcutta Municipal Debentures, of which particulars are contained in Part I of the first Schedule hereunder written, and also the said Calcutta Municipal Debenture, of which particulars are contained in Part II of the last-mentioned Schedule, shall, as from the date of the first publication in the *Calcutta Gazette* of this Notification, vest and be thenceforth vested in the Treasurer of Charitable Endowments for the territories subject to the Government of Bengal, to be held by him and his successors subject to the provisions of the Charitable Endowments Act, 1890, and any rules from time to time framed thereunder by the Governor-General in Council upon trust (until the Local Government shall, in exercise of the powers conferred by the Charitable Endowments Act, 1890, direct the expenditure of the Trust Fund in the erection of a separate hospital for women at Patna or the application of the same to some other purpose of a like nature in accordance with any scheme to be hereafter framed by the Local Government) to receive the interest of the said securities vested by this Notification when and as the same shall become due and payable and from time to time to apply the same in accordance with the said substituted scheme for the creation of an endowment for the payment of the salary of a lady doctor to be employed in the female ward of the Temple Hospital at Patna, of which scheme the particulars are contained in the said second Schedule hereunder written; AND IT IS HEREBY FURTHER notified that the said last-mentioned scheme shall come into operation on the vesting of the said securities in the Treasurer of Charitable Endowments for the territories subject to the Government of Bengal.

THE FIRST SCHEDULE ABOVE REFERRED TO.

PART I.

No. 771, 5 per cent. Calcutta Municipal Debenture of 1887-88 for Rs. 4,000.
No. 804, 5 per cent. Calcutta Municipal Debenture of 1889-90 for Rs. 5,000.

PART II.

No. 1752, 5 per cent. Calcutta Muncipal Debenture of 1887-88 for Rs. 500.

THE SECOND SCHEDULE ABOVE REFERRED TO.

1. The endowment hereby created shall be called "The Syed Mahomed Mehdi Hossein Fund," and its object is and shall be the provision of a suitable monthly salary for a lady doctor to be employed in the female ward of the Temple Hospital at Patna.

2. The Trustees to be appointed under section 5 (1) of the Charitable Endowments Act, 1890, to administer the property vested by the above Notification shall be—

(1) The Commissioner for the time being of the Patna Division.
(2) The Collector of Patna for the time being.
(3) The Civil Surgeon of Patna for time being (who shall also act as Secretary of the Trustees).

3. The interest of the Calcutta Municipal Debentures specified in Parts I and II of the first Schedule above written shall be paid by the Treasurer of Charitable Endowments as and when the same shall be received by him to the said Trustees mentioned in clause hereof, who shall apply the same, from time to time, in paying the whole or a portion of the salary of a lady doctor to be employed in the female ward of the Temple Hospital at Patna.

4. The Trustees may hold meetings for the despatch of business at such times and places and may adjourn and otherwise regulate such meetings as they think fit and determine the quorum necessary for the transaction of business. Questions arising at any meeting shall be determined by a majority of votes, and in case of an equality of votes, the Chairman shall have a second or casting vote.

5. The Trustees may elect a Chairman of their meetings. If no such Chairman is elected, or if he is not present at the time appointed for holding the same, the Trustees present shall choose one of their number to be Chairman of such meeting.

6. Minutes shall be made in books to be provided for the purpose of the names of the Trustees present at each meeting and of all resolutions and proceedings of the Trustees. Any such minute signed by any person purporting to be Chairman of any meeting shall be receivable in evidence of the facts therein stated without further proof.

7. The Trustees shall in books to be kept by them regularly enter or cause to be entered full and true entries of all moneys received and paid by them as such Trustees as aforesaid, and shall from time to time submit to such public servant in such form and at such times as the Local Government may from time to time appoint and prescribe an abstract of such accounts and such returns as to any matters relating to the administration of the trust property as the said Local Government may from time to time require.

E. W. COLLIN,

Offg. Secy. to the Govt. of Bengal.

JUDICIAL DEPARTMENT.

No. 3378A.

APPOINTMENTS AND TRANSFERS.

No. 3256A.—The 31st July 1902.—Babu Lolit Mohan Das, Munsif of Naugaon, in the district of Rajshahi, on leave, is appointed to be a Munsif in Chota Nagpur, to be ordinarily stationed at Palamau, and is vested with the powers of a Judge of a Court of Small Causes for the trial of suits cognizable by such a Court up to the value of Rs. 100, within the local limits of the Palamau Munsifi.

Rajshahi.
Chota Nagpur.

No. 3258A.—The 31st July 1902.—Babu Ambika Charan Mukerji, Munsif of Palamau, in Chota Nagpur, is appointed to be a Munsif in the district of Rajshahi, to be ordinarily stationed at Naugaon, and is vested with the powers of a Judge of a Court of Small Causes for the trial of suits cognizable by such a Court up to the value of Rs. 100, within the local limits of the Naugaon Munsifi.

Chota Nagpur.
Rajshahi.

No. 3270A.—The 31st July 1902.—Babu Baidya Nath Ghuttack, Munsif of Chandpur, in the district of Tippera, who has been granted leave, is appointed to be a Munsif in the district of Noakhali, to be ordinarily stationed at Fenny, and is vested with the powers of a Judge of a Court of Small Causes for the trial of suits cognizable by such a Court up to the value of Rs. 100, and with the functions of a District Court, under section 26, sub-section (1), of Act VII of 1889, within the local limits of the Fenny Munsifi.

Tippera.
Noakhali.

No. 3272A.—The 31st July 1902.—Babu Jogesh Chundra Mukerjee, Munsif of Fenny, in the district of Noakhali, is appointed to be a Munsif in the district of Tippera, to be ordinarily stationed at Chandpur, and is vested with the powers of a Judge of a Court of Small Causes for the trial of suits cognizable by such a Court up to the value of Rs. 100, within the local limits of the Chandpur Munsifi.

Noakhali.
Tippera.

No. 3274A.—The 31st July 1902.—Babu Sita Nath Ghose B.L., is appointed to act as a Munsif in the district of Noakhali, to be ordinarily stationed at Fenny, during the absence, on leave, of Babu Baidya Nath Ghuttack, or until further orders.

Noakhali.

No. 3276A.—The 31st July 1902.—Babu Bunwari Lal Goswami, B.L., is appointed to act as a Munsif in the district of Dacca, to be ordinarily stationed at the Sadar station, during the absence, on leave, of Babu Mohim Chandra Sircar, or until further orders.

Dacca.

No. 3355A.—The 5th August 1902.—Babu Lal Behari Dey, Subordinate Judge, Shahabad, on leave, is appointed to be Subordinate Judge of Jessore, but to be on deputation to Khulna.

Shahabad.
Jessore.

No. 3366A.—The 5th August 1902.—Babu Girija Bhusan Sen, B.L., is appointed to act as a Munsif in the district of Bankura, to be ordinarily stationed at Vishnupur, during the absence, on leave, of Babu Satis Chandra Mitra, or until further orders.

Bankura.

No. 3375A.—The 5th August 1902.—Babu Kumud Nath Roy, M.A., B.L., is appointed to act as a Munsif in the district of Dinajpur, to be ordinarily stationed at Thakurgaon, during the absence, on leave, of Babu Upendra Nath Bhanja, or until further orders.

Dinajpur.

No. 3289J.—The 2nd August 1902.—The following gentlemen are re-appointed to be Honorary Magistrates of the Independent Benches mentioned against their respective names, in the district of Dacca:—

Dacca.

Mr. Edward Chippindall Kemp	... ...	Sadar Bench.
Khajeh Abdul Karim	... ...	
Babu Surendra Kumar Ray	... ...	
„ Hari Mohan Rai	... ...	Narayanganj Bench..
„ Barada Charan Banerjee	... ...	
„ Kamini Mohan Dutta	... ...	Manikganj Bench.
„ Chandra Kishore Rai	... ...	

LEAVE.

No. 3362A.—The 28th July 1902.—Babu Mohim Chandra Sircar, Munsif of Dacca, is allowed leave for twenty-one days, viz., three days under article 309 of the Civil Service Regulations, and the remaining period under article 306 (*b*) of the same Regulations, with effect from the 2nd August 1902, or from the date on which he may be relieved.

Dacca.

The 28th July 1902.—Babu Baidya Nath Ghuttack, Munsif of Chandpur, in the district of Tippera, is allowed leave for one month, under article 306 (*b*) of the Civil Service Regulations, with effect from the date on which he may be relieved.

Tippera.

The 28th July 1902.—Babu Ashutosh Gupta, Munsif of Fenny, in the district of Noakhali, is allowed leave for two weeks, under article 306 (*b*) of the Civil Service Regulations, with effect from the 8th August 1902, or from the date on which he may be relieved.

Noakhali.

The 28th July 1902.—Babu Aghor Chandra Hazra, Munsif of Faridpur, is allowed leave for one month, under article 306 (*b*) of the Civil Service Regulations, in extension of that granted to him under the order of the 18th June 1902.

Faridpur.

No. 3363A.—The 31st July 1902.—Babu Trailakya Nath Som, Munsif, under orders of transfer to Kalna, in the district of Burdwan, is allowed furlough for four months, under article 371 of the Civil Service Regulations, in extension of the leave granted to him under the order of the 24th June 1902.

Burdwan.

No. 3364A.—The 1st August 1902.—Babu Upendra Nath Bhanja, Munsif of Thakurgaon, in the district of Dinajpur, is allowed leave for one month, under article 306 (*b*) of the Civil Service Regulations, with effect from the date on which he may be relieved.

Dinajpur.

No. 3365A.—The 2nd August 1902.—Babu Devendro Nath Pal, Munsif, under orders of transfer to Contai, in the district of Midnapore, is allowed leave for fifteen days, under article 306 (*b*) of the Civil Service Regulations, in extension of that granted to him under the order of the 10th July 1902.

Midnapore.

The 2nd August 1902.—Babu Jotindra Chandra Sen, Munsif of Gaibanda, in the district of Rangpur, is allowed leave for one month, under article 306 (*b*) of the Civil Service Regulations, with effect from the date on which he may be relieved.

Rangpur.

RESIGNATIONS.

No. 3254J.—The 30th July 1902.—The Lieutenant-Governor accepts the resignation tendered by Maulvi Syed Mahomed of his appointment as an Honorary Magistrate of the Sadar Independent Bench, in the district of Midnapore.

Midnapore.

No. 3273J.—The 31st July 1902.—The Lieutenant-Governor accepts the resignation tendered by Babu Girija Charan Bhattacherjee of his appointment as an Honorary Magistrate of the Bhatpara Independent Bench, in the district of the 24-Parganas.

24-Parganas.

No. 3299J.—The 31st July 1902.—The Lieutenant-Governor accepts the resignation tendered by Maulvi Syed Mohammed Abu Saleh of his appointment as an Honorary Magistrate of the Roserah Independent Bench, in the district of Darbhanga.

Darbhanga.

POWERS.

No. 3301A.—The 2nd August 1902.—Babu Dakshinaranjan Ghose, Deputy Magistrate, Ranchi, is vested with the powers of a Magistrate of the first class.

Ranchi.

No. 3331A.—The 4th August 1902.—Babu Nogendra Nath Mitter, Deputy Magistrate, on leave, who has, under the order of this date, been posted to the head-quarters station of the Dacca district, is vested with the powers of a Magistrate of the first class.

Dacca.

No. 3290J.—The 2nd August 1902.—The following gentlemen, who have been re-appointed to be Honorary Magistrates of the Independent Benches mentioned against their respective names, in the district of Dacca, are vested with the powers of a Magistrate of the third class:—

Dacca.

Mr. Edward Chippindall Kemp	... ...	Sadar Bench.
Khajeh Abdul Karim	... ...	
Babu Surendra Kumar Ray	... ...	
,, Hari Mohan Rai	... ...	Narayanganj Bench.
,, Barada Charan Banerjee	... ...	
,, Kamini Mohan Dutta	... ...	Manikganj Bench.
,, Chandra Kishore Rai	... ...	

C. E. BUCKLAND,
Chief Secy. to the Govt. of Bengal.

NOTIFICATION—No. 3315J.

The 2nd August 1902.—In exercise of the power conferred by section 2 of Bengal Act II of 1867 (*an Act to provide for the punishment of public gambling and the keeping of common gaming-houses*), the Lieutenant-Governor is pleased to extend the said Act, with effect from the 1st September 1902, to the Chandpur Municipality, in the district of Tippera.

Tippera.

C. E. BUCKLAND,
Chief Secy. to the Govt. of Bengal.

NOTIFICATION—No. 3421J.

The 5th August 1902.—Under section 14 of the Bengal, North-Western Provinces and Assam Civil Courts Act, XII of 1887, the Subdivisional Officer of Alipur, in the district of Jalpaiguri, who exercises the powers of a Munsif, is hereby authorised to try civil suits at Alipur Duars, Falakata, Buxa and Kumargram.

Jalpaiguri.

C. E. BUCKLAND,
Chief Secy. to the Govt. of Bengal.

[Second Publication.]

NOTIFICATION—No. 3251J.

The 29th July 1902.—In exercise of the powers conferred by section 2 of Bengal Act II of 1867 (*an Act to provide for the punishment of public gambling and the keeping of common gaming-houses in the territories subject to the Lieutenant-Governor of Bengal*), the Lieutenant-Governor is pleased—

Dinajpur.

(*a*) to extend the said Act, with effect from the 15th August 1902, to the town of Raiganj, comprising villages Dowlatpur, Mohanbati and Raiganj, in thana Raiganj, in the district of Dinajpur, and

(*b*) to define the limits of the said town as follows:—

North—Nichibari.
West—The River Kulik.
South—Pirgachi.
East—Barapooker, Brown Shaheb's temple and Kujapara top.

C. E. BUCKLAND,
Chief Secy. to the Govt. of Bengal.

PUBLIC WORKS DEPARTMENT.

ESTABLISHMENT.

The 1st August 1902.

No. 168.—Mr. T. H. Richardson, Engineer under Covenant, passed the Professional examination prescribed in paragraphs 169—171, Public Works Department Code, Volume I, which was held on the 8th and 9th July 1902.

W. A. INGLIS,
Offg. Secy. to the Govt. of Bengal.

ESTABLISHMENT.

The 1st August 1902.

No. 169.—Babu Ashutosh Bose, Assistant Engineer, 3rd grade, passed the Professional examination prescribed in paragraphs 169—171, Public Works Department Code, Volume I, which was held on the 8th and 9th July 1902.

D. B. HORN,
Offg. Secy. to the Govt. of Bengal.

RAILWAY DEPARTMENT.

The 5th August 1902.

No 153R.—Declaration.—Whereas it appears to the Lieutenant Governor of Bengal that land is required to be taken by Government at the public expense for a public purpose, viz., for station road from the Railway premises to the District Board road at Dewantolla, in the village of Khariabadah, pargana Fuladassi, zilla Rangpur, it is hereby declared that for the above purpose land measuring, more or less, 1 bigha 12 chitaks of standard measurement, bounded on the—

North—By the District Board road,
East—By the land belonging to Raja Mohima Runjon Roy Chowdhury, of Kankina,
South—By the land belonging to the Brahmaputra-Sultanpur Branch Railway,
West—By the land belonging to Raja Mohima Runjon Roy Chowdhury, of Kankina,

is required within the aforesaid village of Khariabadah.

This declaration is made, under the provisions of section 6, Act I of 1894, to all whom it may concern.

A plan of the land is available for inspection in the office of the Executive Engineer, Saidpur District, Eastern Bengal State Railway.

No. 154R.—Declaration.—Whereas it appears to the Lieutenant-Governor of Bengal that land is required to be taken by Government at the public expense for a public purpose, viz., for the construction of railway drainage at the Buxar Station of the East Indian Railway, in the villages of Sahnipatti (Buxar) and Misrowlia, pargana Bhojepur, zilla Shahabad, it is hereby declared that for the above purpose two pieces of land measuring, more or less, 17 bighas 6 cottahs and 18½ chitaks of standard measurement (corresponding to 5·7688 acres), bounded as follows—

1st plot.—Village Sahnipatti (area 4 bighas and 7½ chitaks)—On the north by railway land, on the south by railway land, on the east by Buxar-Itarhi Road, and on the west by railway land.

2nd plot.—Village Misrowlia (area 13 bighas 6 cottahs and 11 chitaks)—On the north by railway land, on the south by part of the fields of Jagesar Rai, Thakur Kohar, Thakur Rai and Gokhul Lal, on the east by Buxar-Itarhi Road, and on the west by part of the fields of Gokhul Lal and Babu Lal Rai,

are required within the aforesaid villages of Sahnipatti and Misrowlia.

Mines of coal, iron-stone, slate or other minerals lying under the land, except only such parts of the mines and minerals as it may be necessary to dig or carry away, or use in the construction of the work for the purpose of which the land is being acquired, are not needed.

This declaration is made, under the provisions of section 6 of Act I of 1894, and section 3, clause (1), Act XVIII of 1885, to all whom it may concern.

A plan of the land may be inspected in the office of the District Engineer, East Indian Railway, Dinapur.

No. 155R.—Declaration.—Whereas it appears to the Lieutenant-Governor of Bengal that land is required to be taken by Government at the public expense for a public purpose, viz., for additions to the station-yard at Rajhara, on the Barun-Daltonganj Railway, in the village of Chachanba, tahsil Palamau, zilla Palamau, it is hereby declared that for the above purpose a piece of land measuring, more or less, 4·55 acres, bounded on the north by the land of village Chachanba, and on the south, east and west by the land of Barun-Daltonganj Railway, is required within the aforesaid village of Chachanba.

Mines of coal, iron-stone, slate or other minerals lying under the land, except only such parts of the mines and minerals as it may be necessary to dig or carry away, or use in the construction of the work for the purpose of which the land is being acquired, are not needed.

This declaration is made, under the provisions of section 6 of Act I of 1894, and section 3, clause (1), Act XVIII of 1885, to all whom it may concern.

A plan of the land may be inspected in the office of the Assistant Engineer, Barun-Daltonganj Railway, Barun.

No. 156R.—Declaration.—Whereas it appears to the Lieutenant-Governor of Bengal that land is required to be taken by Government at the public expense for a public purpose, viz., for left protection bund of Teesta Bridge, in the village of Gokoonda, pargana Kakina, zilla Rangpur, it is hereby declared that for the above purpose two plots of land measuring, more

or less, 12 acres 3 roods 13 poles of standard measurement, bounded on the north by land of Babu Iswar Chander Ghose, on the south by river Teesta, and on the east and west by land of Babu Iswar Chander Ghose, are required within the aforesaid village of Gokoonda.

Mines of coal, iron-stone, slate, or other minerals lying under the land, except only such parts of the mines and minerals as it may be necessary to dig or carry away or use in the construction of the work for the purpose of which the land is being acquired, are not needed.

This declaration is made, under the provisions of section 6, Act I of 1894, and section 3, clause (I), Act XVIII of 1885, to all whom it may concern.

A plan of the land is available for inspection in the office of the Executive Engineer, Katihar District, Eastern Bengal State Railway.

W. A. INGLIS,
Offg. Secy. to the Govt. of Bengal.

MARINE DEPARTMENT.

The 1st August 1902.

No. 101Marine.—Mr. E. O. Manning, Senior Master Pilot, is appointed to act as a Branch Pilot, *vice* Mr. W. H. Ridler, Acting Branch Pilot, reduced to the grade of Junior Master Pilot, or until further orders, with effect from the date he is put on the running list.

D. B. HORN,
Offg. Secy. to the Govt. of Bengal.

The 4th August 1902.

No. 103Marine.—The following telegram dated the 1st instant from the Government of India, Home Department, relative to the disappearance of plague in the port of Porbandar, in the Kattiawar State, is published for general information.

D. B. HORN,
Offg. Secy. to the Govt. of Bengal.

Copy of a telegram No. $\frac{\text{Sanitary}}{1949\text{-}68}$ *, dated 1st August 1902, from the Government of India, Home Department, to the Government of Bengal, Marine Department.*

MY endorsements of 25th February and 24th March last. Porbandar free from plague. Last death on 14th and 7th June last.

The 4th August 1902.

No. 104Marine.—It is hereby notified for general information that the port of Verawal, in the Bombay Presidency, is declared free from plague, and that the regulations for the prevention of the introduction of plague by sea, which were imposed in the ports of Orissa and Chittagong against vessels arriving from Verawal, are hereby withdrawn.

D. B. HORN,
Offg. Secy. to the Govt. of Bengal.

The 5th August 1902.

No. 105Marine.—The following Notification No. 1829, dated the 29th July 1902, published by the Government of India, relative to the imposition of quarantine on passengers from Egypt, is republished for general information.

D. B. HORN,
Offg. Secy. to the Govt. of Bengal.

No. 1829, dated Simla, the 29th July 1902.

NOTIFICATION—By the Government of India, Home Department.

THE following telegram is published for general information:—

Telegram dated Therapia, the 24th July 1902.

From—His Britannic Majesty's Ambassador Extraordinary and Plenipotentiary at Constantinople,

To—His Excellency the Viceroy.

Seven days' quarantine Egypt, Mediterranean littoral, Suez Canal and Gulf.

SUBORDINATE CIVIL SERVICE.

No. 3379A.

No. 3308A.—The 2nd August 1902.—Maulvi Anwar Karim, Probationary Sub-Deputy Collector, is posted to the head-quarters station of the Saran district.

Saran.

C. E. BUCKLAND,
Chief Secy. to the Govt. of Bengal.

REGISTRATION DEPARTMENT.

NOTIFICATION—No. 1553P.

The 31st July 1902.—The Lieutenant-Governor sanctions the abolition of the office of the Joint-Sub-Registrar of Supaul at Manganj, in the subdivision of Supaul, in the district of Bhagalpur, with effect from the 1st July 1902.

Bhagalpur.

C. E. BUCKLAND,
Chief Secy. to the Govt. of Bengal.

JAIL DEPARTMENT.

No. 9158, dated Calcutta, the 31st July 1902.—Lieutenant-Colonel D. Basu made over charge of the Rangpur Jail to Assistant Surgeon Moti Lal Mukherjee on the forenoon of the 8th July 1902.

No. 9198, dated Calcutta, the 1st August 1902.—Honorary Captain R. M. Blaker made over charge of the Dinajpur Jail to Assistant Surgeon Mohendra Kumar Chuckerbutty on the forenoon of the 17th March 1902.

No. 9204, dated Calcutta, the 1st August 1902.—Dr. U. C. Mukherjee made over charge of the Suri Jail to Assistant Surgeon Kunja Lal Sanyal on the forenoon of the 25th July 1902.

No 9234, dated Calcutta, the 1st August 1902.—Assistant Surgeon Ras Behari Baksi made over charge of the Barasat Jail to Assistant Surgeon Durgananda Sen on the afternoon of the 21st July 1902.

M. S. EMERSON,
for *Inspector-General of Jails, Bengal.*

CIVIL MEDICAL DEPARTMENT, BENGAL.

No. 7608, dated the 29th July 1902.—Assistant Surgeon Rai Guru Charan Das Gupta Bahadur did supernumerary duty at the Medical College Hospital, Calcutta, from the forenoon of the 31st May to the forenoon of the 2nd July 1902.

R. D. MURRAY, M.D., LIEUT.-COL., I.M.S.,
for *Inspector-General of Civil Hospitals, Bengal.*

No. 7745, dated the 1st August 1902.—In continuation of Medical Department Notification No. 430D., dated the 2nd May 1902, the following list of the 4th-year students who have passed the final examination of Hospital Assistants after re-examination from the Campbell Medical School is published for general informatio n :—

Second Division.

1. Kali Prasanna Das.
2. Bijay Bhushan Basu.
3. Mathura Nath Sur.
4. Akshay Kumar Chattopadhyay.
5. Kedar Nath Ghosh.
6. Priya Lata Datta.*
7. Narendra Nath Mukhopadhya.
8. Aghore Nath Samanta.
9. Dwaraka Nath Ghosh.
10. Biraj Mohini Biswas.*
11. Parameshwar Maji.
12. Jagneswar Chaudhuri.
13. Phani Bhushan Chakravarti.
14. Guna Sindhu Dhali.
14. Madhu Sudan Bandyopadhyay.
16. Adhar Chandra Khan.
17. Aghore Nath Mukhopadhyay.
18. Snehalata Neogy.*

* Female students.

The following students passed also the special examination in medico-legal subjects in 1902:—

1. Bijay Bhushan Basu.
2. Madhu Sudan Bandyopadhyay.
3. Kali Prasanna Das.

T. H. HENDLEY, COL., I.M.S.,
Inspector-General of Civil Hospitals, Bengal.

No. 7815, dated the 4th August 1902.—Assistant Surgeon Sarat Chandra Dutta acted at the Russapagla Dispensary, in the 24-Parganas district, from the 24th April to the 9th May 1902, both days inclusive.

No. 7818, dated the 4th August 1902.—Assistant Surgeon Kali Nath Banerjee, Medical Officer, Eastern Bengal State Railway Hospital at Katihar, is allowed privilege leave for six days, under article 291 of the Civil Service Regulations, in extension of the leave granted to him in Civil Medical Department Notification No. 1094D., dated the 4th June 1902.

No. 7861, dated the 4th August 1902.—Assistant Surgeon Upendra Nath Baksi acted as Medical Officer, Eastern Bengal State Railway Hospital at Katihar, from the 13th June to the 12th July 1902, during the absence, on leave, of Assistant Surgeon Kali Nath Banerjee.

No. 7864, dated the 4th August 1902.—Assistant Surgeon Upendra Nath Baksi held charge of the Rampur Boalia Dispensary, Rajshahi, from the 21st March to the 29th April 1902, both days inclusive.

No. 7867, dated the 4th August 1902.—Assistant Surgeon Upendra Nath Baksi did supernumerary duty at the Rampur Boalia Dispensary, Rajshahi, from the 30th April to the 2nd May 1902, both days inclusive.

No. 7870, dated the 4th August 1902.—Assistant Surgeon Upendra Nath Baksi did supernumerary duty at the Medical College Hospital, Calcutta, from the 12th May to the 7th June 1902, both days inclusive.

R. D. MURRAY, M.D., LIEUT.-COL., I.M.S.,
for *Inspector-General of Civil Hospitals, Bengal.*

TREASURY NOTICES.

DEPUTY COLLECTOR KSHIRODE CHANDRA SEN has been placed in charge of the Bogra Treasury from the 10th July 1902 and authorised to draw bills on other Treasuries.

C. R. MARINDIN, *Commissioner.*

COMMR.'S OFFICE, RAJSHAHI DIVN., JALPAIGURI, *the 28th July 1902.*

DEPUTY COLLECTOR BABU JOGGESHWAR BISWAS has been placed in charge of the Jessore Treasury and authorised to draw bills on other Treasuries.

B. CHAKRAVARTI, *Persl. Asst.*, for *Commr. on tour.*

COMMR.'S OFFICE, PRESY. DIVN., CALCUTTA, *the 2nd August 1902.*

HIGH COURT NOTICE.

The 21st July 1902.

THE following rule framed by the High Court of Judicature at Fort William in Bengal under clause (*i*) of section 20 of the Court-fees Act, VII of 1870, confirmed by the Local Governments of Bengal and Assam and sanctioned by the Governor-General in Council, is published for general information.

By order of the High Court,

R. SHEEPSHANKS,
Registrar.

(CIVIL.)

Rule No. 6 of 1902.

1. Insert the following as Note 1 to Article 3 of Part II of Rule I of the Rules framed by the High Court in accordance with clause (*i*), section 20 of the Court-fees Act of 1870, Chapter III, page 66 of the General Rules and Circular Orders (Civil) :—

NOTE 1.—When process of attachment is issued in a number of cases relating to the same or neighbouring villages, the fee (*a*) must be paid in each case, the daily fee (*b*) only for the men actually employed.

Number the existing note to the Article as NOTE 2.

2. Insert the following as Note 1 to the corresponding Article of Part III of the same rule in the same chapter, page 69, *ibid* :—

NOTE 1.—When process of attachment is issued in a number of cases relating to the same or neighbouring villages, the fee (*a*) must be paid in each case, the daily fee (*b*) only for the men actually employed.

Number the existing note to the Article as NOTE 2.

3. Insert the following as Note 1 to the corresponding Article of Part IV of the same rule in the same chapter, page 71, *ibid* :—

NOTE 1.—When process of attachment is issued in a number of cases relating to the same or neighbouring villages, the fee (*a*) must be paid in each case, the daily fee (*b*) only for the men actually employed.

Number the existing note to the Article as NOTE 2.

By order of the High Court,

R. SHEEPSHANKS,
Registrar.

The 21st July 1902.

Sheriff's Office, the 23rd July 1902.

NOTICE is hereby given that the Fourth Criminal Sessions of the year 1902 of the High Court of Judicature at Fort William in Bengal, for the Town of Calcutta and Factory of Fort William, and the places subordinate thereto, will be held at the Court-house, in the Town of Calcutta, on Monday, the eighteenth day of August next, at 11 o'clock in the forenoon, and thence forward from day to day until the said Sessions be over. And it is hereby proclaimed that all persons who are to prosecute any of the prisoners to be brought up for trial at the said Sessions be present then and there to prosecute.

H. M. RUSTUMJEE, *Sheriff.*

সরিফ আফিস, সন ১৯০২ সাল তারিখ ২৩শে জুলাই।

সকলকে সমাচার দেওয়া যাইতেছে যে সুবা বাঙ্গালার কোর্ট উইলিয়ম দুর্গের অধীন শহর কলিকাতার ও অন্যান্য স্থানের ফৌজদারী বিচার নিষ্পত্তি জন্য আগামী সন ১৯০২ সালের ১৮ই আগষ্ট সোমবার বেলা ১১ ঘটিকার সময় এবং যে পর্য্যন্ত সেশিয়ানের কার্য্য শেষ না হয় প্রতিদিন উক্ত সময়ে কলিকাতায় হাইকোর্টের আপন আদালত ঘরে সন ১৯০২ সালের চতুর্থ ক্রিমিনেল সেশিয়ান বসিবেক এবং এতদ্দ্বারা প্রচার করা যাইতেছে যে, যে সকল ব্যক্তি কোন কয়েদির বিরুদ্ধে ফৌজদারী মিছিল করিবেক তাহারা উক্ত স্থানে উক্ত সময়ে হাজির থাকিয়া মোকদ্দমা করে ইতি।

এইচ্, এম্, রুস্তমজী, সরিফ।

EDUCATION DEPARTMENT, BENGAL.

Subordinate Educational Service.

The 9th July 1902.—The following arrangements are sanctioned consequent on the death of Maulvi Syed Muhammad Ibrahim, Lecturer in Persian, Patna College:—

(1) Maulvi Abdul Hai, Assistant Master (Persian Teacher) in the Patna Collegiate School (Class IV), is appointed to be Lecturer in Persian and Arabic in the Patna College, on the pay of his own grade, *vice* Maulvi Syed Muhammad Ibrahim.

(2) Maulvi Abdul Quadir, M.A., Assistant Master in the Calcutta Madrasah (Class VIII), is appointed to be an Assistant Master (Persian Teacher) in the Patna Collegiate School. on the pay of his own grade, *vice* Maulvi Abdul Hai.

The 3rd August 1902.—Babu Jay Chandra Mahalanavis, Assistant (Drawing) Master of the Ranchi Training School (Class VI), is appointed to be Assistant (Drawing) Master of the Patna Training School, on the pay of his own grade, *vice* Babu Hari Ballav Das, transferred.

Babu Annada Prasad Chatterjea, a Sub-Inspector of Schools under the District Board of Noakhali, was granted by the Board privilege leave for one month, with effect from the 26th May 1902.

Babu Rati Kanta Laha, a Sub-Inspector of Schools under the District Board of Nadia, was granted by the Board privilege leave for 15 days, with effect from the 8th July 1902.

The 4th August 1902.—The following confirmations, promotions and appointment in the Subordinate Educational Service are sanctioned:—

Confirmed in Class III.

Babu Prasanna Kumar Mazumdar, Deputy Inspector of Schools, Noakhali, with effect from the 1st July 1902, *vice* Babu Hari Nath Sen, promoted to Class II.

Babu Kali Kumar Ganguli, an Assistant in the office of the Director of Public Instruction, with effect from the 1st July 1902, *vice* Babu Kalika Nanda Mukherjea, promoted to Class II.

Babu Basanta Kumar Das, B.A., Head Master, Jessore Zilla School, with effect from the 6th July 1902, *vice* Babu Jadu Nath Chukerbertty, promoted to Class II.

Babu Tarini Kisor Bardhan, Deputy Inspector of Schools, Rangpur, with effect from the 13th July 1902, *vice* Maulvi Mohammad Azizul Huq, promoted to Class II.

Promoted substantively pro tempore *to Class III.*

Babu Narayan Chandra Mukherjea, B.A., Assistant Head Master, Hare School, with effect from the 1st July 1902, *vice* Babu Prasanna Kumar Mazumdar.

Munshi Samuel Bibhudan Mundle, B.A., Special Deputy Inspector of Schools, Sonthal Parganas, with effect from the 1st July 1902, *vice* Babu Kali Kumar Ganguli.

Babu Bishnu Charan Bhattacharyya, B.A., Deputy Inspector of Schools, Malda, with effect from the 6th July 1902, *vice* Babu Basanta Kumar Das.

Babu Ram Chandra Ganguli, B.A., an Assistant Master, Hare School, with effect from the 13th July 1902, *vice* Babu Tarini Kisor Bardhan.

Confined in Class IV.

Babu Krishna Lal Chatterjea, an Assistant (Drawing) Master, Hare School, with effect from the 1st July 1902, *vice* Maulvi Syed Muhammad Ibrahim, deceased.

Babu Raksha Kali Sil, Head Clerk, Calcutta Madrasah, under orders of transfer to the office of the Inspector of Schools, Presidency Division, with effect from the 1st July 1902, *vice* Babu Prasanna Kumar Mazumdar.

Babu Gopi Bhusan Sen, B.A., Senior Assistant in the Chemical Laboratory, Presidency College, with effect from the 1st July 1902, *vice* Babu Kali Kumar Ganguli.

Babu Jadub Chandra Chuckerbutty, Teacher of the Elementary Painting Class, Government School of Art, withe effect from the 6th July 1902, *vice* Babu Basanta Kumar Das.

Babu Trisuldhari Sinha, Assistant Head Master, Motihari Zilla School, and now Officiating Deputy Inspector of Schools, Singhbhum, with effect from the 13th July 1902, *vice* Babu Tarini Kisor Bardhan.

Promoted substantively pro tempore *to Class IV.*

Maulvi Muhammad Quasim, an Assistant Master (Persian Teacher), Calcutta Madrasah, with effect from the 1st July 1902, *vice* Babu Krishna Lal Chatterjea.

Babu Sarat Chandra Brahmachari, M.A., Deputy Inspector of Schools, Champaran, with effect from the 1st July 1902, *vice* Babu Raksha Kali Sil.

Maulvi Alfazuddin Ahmed, M.A., Deputy Inspector of Schools, Hooghly, with effect from the 1st July 1902, *vice* Babu Gopi Bhusan Sen.

Maulvi Abdul Lateef, B.A., Additional Deputy Inspector of Schools, 24-Parganas, with effect from the 6th July 1902, *vice* Babu Jadub Chandra Chuckerbutty.

Babu Barada Prasad Ghose, First Assistant in the Physical Laboratory, Presidency College, with effect from the 13th July 1902, *vice* Babu Trisuldhari Sinha.

Confirmed in Class V.

Mr. J. Jones, an Assistant in the Office of the Director of Public Instruction, with effect from the 1st July 1902, *vice* Babu Krishna Lal Chatterjea.

Babu Barada Kanta Datta, Teacher of Advanced Free-hand, Government School of Art, with effect from the 1st July 1902, *vice* Babu Gopi Bhusan Sen.

Babu Jogendra Lal Sinha, Librarian, Presidency College, with effect from the 6th July 1902, *vice* Babu Jadub Chandra Chuckerbutty.

Babu Brajendra Nath Ghosal, an Assistant Master (Head Pandit), Hare School, with effect from the 13th July 1902, *vice* Babu Trisuldhari Sinha.

Promoted substantively pro tempore *to Class V.*

Pandit Chandra Kanta Vidyalankar, an Assistant Master (Head Pandit), Chittagong Collegiate School, with effect from the 1st July 1902, *vice* Mr. J. Jones.

Babu Umesh Chandra Chatterjea, Head Clerk, Presidency College, with effect from the 1st July 1902, *vice* Babu Barada Kanta Datta.

Babu Mahendra Chandra Som, Assistant Head Master, Noakhali Zilla School, with effect from the 6th July 1902, *vice* Babu Jogendra Lal Sinha.

Babu Hreeshikesh Rautaraya, Sub-Inspector of Schools, Keonjhar and Nilgiri, Tributary Mahals, Orissa, with effect from the 13th July 1902, *vice* Babu Brajendra Nath Ghosal.

Confirmed in Class VI.

Miss Mary Haughton, an Assistant Mistress, Dow Hill Girls' School, Kurseong, with effect from the 1st July 1902, *vice* Pandit Alok Nath Nyayabhusan, retired.

Miss Jessie D'Souza, an Assistant Mistress, Dow Hill Girls' School, Kurseong, with effect from the 1st July 1902, *vice* Mr. J. Jones.

Babu Ram Chandra Maitra, B.A., Assistant Head Master, Chaibassa Zilla School, with effect from the 1st July 1902, *vice* Babu Barada Kanta Datta.

Babu Satis Chandra Sen, B.A., an Assistant Master, Dacca Collegiate School, with effect from the 6th July 1902, *vice* Babu Jogendra Lal Sinha.

Babu Atul Chandra Ganguli, B.A., an Assistant Master, Hooghly Collegiate School, and now substantive *pro tempore* Junior Assistant in the Chemical Laboratory, Presidency College, with effect from the 13th July 1902, *vice* Babu Brajendra Nath Ghosal.

Promoted substantively pro tempore *to Class VI.*

Babu Debendra Nath Ghosh, B.A., an Assistant Master, Sanskrit Collegiate School, with effect from the 1st July 1902, *vice* Miss Mary Haughton.

Mr. F. D'Silva, an Assistant in the Office of the Director of Public Instruction, with effect from the 1st July 1902, *vice* Miss Jessie D'Souza.

Babu Manmatha Chandra Mitra, B.A., Assistant Head Master, Dumka Zilla School, with effect from the 1st July 1902, *vice* Babu Ram Chandra Maitra.

Munshi Golam Rahman, Draftsman, Civil Engineering College, Sibpur, with effect from the 6th July 1902, *vice* Babu Satis Chandra Sen.

Babu Upendra Nath Mitra, Head Laboratory Assistant, Civil Engineering College, Sibpur, with effect from the 13th July 1902, *vice* Babu Atul Chandra Ganguli.

Confirmed in Class VII.

Babu Braja Lal Adhikari, an Assistant Master, Krishnagar Collegiate School, with effect from the 1st July 1902, *vice* Miss Mary Haughton.

Babu Sarveswar Mukherjea, an Assistant Master, Murshidabad Nawab's High School, with effect from the 1st July 1902, *vice* Miss Jessie D'Souza.

Mr. S. W. Percival, an Assistant Master, Dacca Collegiate School, with effect from the 6th July 1902, *vice* Babu Satis Chandra Sen.

Babu Sital Prasad, B A, Assistant Head Master, Chapra Zilla School, with effect from the 13th July 1902, *vice* Babu Atul Chandra Ganguli.

Promoted to Class VII.

Maulvi Quasimuddin Khan, B A., an Assistant Master in the Anglo-Persian Department, Calcutta Madrasah, with effect from the 1st July 1902, *vice* Babu Ram Chandra Maitra

Promoted substantively pro tempore *to Class VII.*

Babu Sasi Bhusan Ghosh, an Assistant Master, Purulia Zilla School, with effect from the 1st July 1902, *vice* Babu Braja Lal Adhikari.

Maulvi Hurmutulla, an Assistant Master, Murshidabad Nawab's Madrasah, with effect from the 1st July 1902, *vice* Babu Sarveswar Mukherjea.

Babu Keshav Chandra Sarkar, B.A, an Assistant Master, Hooghly Branch School, with effect from the 6th July 1902, *vice* Mr. S. W. Percival.

Maulvi Abdul Quadir, M.A, an Assistant Master (Persian Teacher), Patna Collegiate School, with effect from the 13th July 1902, *vice* Babu Sital Prasad.

Confirmed in Class VIII.

Babu Srinath Chandra, an Assistant Master (Head Pandit), Mymensingh Zilla School, with effect from the 1st July 1902, *vice* Babu Braja Lal Mukherjea.

Maulvi Lutful Huq, an Assistant Master, Murshidabad Nawab's Madrasah, with effect from the 1st July 1902, *vice* Babu Sarveswar Mukherjea.

Appointed to Class VIII.

Maulvi Muhammad Irfan, M.A., an Assistant Master in the Anglo-Persian Department, Calcutta Madrasah, with effect from the 1st July 1902, *vice* Maulvi Quasimuddin Khan.

A. PEDLER,
Director of Public Instruction, Bengal.

ERRATUM.

IN the notification dated 22nd July 1902 at page 1040, Part I of the *Calcutta Gazette* of 23rd July 1902, *for* the word "Dacca" *read* "Cuttack" in the heading of the notification, and *for* the name "*Ivayadhar* Kar" *read* "*Mayadhar* Kar."

CALCUTTA,
The 6th August 1902.

A. PEDLER,
Director of Public Instruction, Bengal.

ORDERS BY THE HON'BLE THE VICE-CHANCELLOR AND SYNDICATE OF THE CALCUTTA UNIVERSITY.

1. The following eight Natural Orders in Botany have been prescribed for the ensuing Preliminary Scientific M.B. and L.M.S. Examinations:—

1. Anonaceæ.	5. Apocynaceæ.
2. Rutaceæ.	6. Scrophularineæ.
3. Leguminosæ.	7. Aroideæ.
4. Compositæ.	8. Palmeæ.

2. The following Genera and Orders in Zoology are fixed for the B.A. Examination in 1893:—

(*a*) The Indian Genera of the SUB-CLASS—*Teleostomi.*
(*b*) The Indian Genera of the SUB-ORDER—*Ophidra.*
(*c*) The Indian Genera of the AVIAN ORDER—*Accipitres.*
(*d*) The Order of the CLASS—*Insecta.*

SENATE HOUSE,
The 30th July 1902.

K. C. BANERJI,
Offg. Registrar, Calcutta University.

MEMORANDUM.

UNIVERSITY ENTRANCE EXAMINATION.

PRIVATE STUDENTS.

1. Private students are those who do not appear from any school, or who have been transferred from one school to another after the 31st August without the consent of the Inspector.

2. The term "Private students" includes School Masters.

3. Private students must appear at the test examination of any one of the undermentioned schools on dates to be fixed by Head Masters:—

1. Ravenshaw Collegiate School (with the permission of the Principal of the College).
2. Balasore Zilla School.
3. Balasore Christian Mission High English School.
4. Bhadrak High English School.
5. Lakhannath High English School.
6. P. M. Academy.
7. Cuttack Mission High English School.
8. Cuttack Town Victoria High English School.
9. Jajpur High English School.
10. Kendrapara High English School.
11. Puri Zilla School.
12. Khurda High English School.
13. Baripada High English School.
14. Dhenkanal High English School.

4. Every private candidate must satisfy the following conditions:—

(*a*) That he has not failed at the test examination of any Entrance school in the current session.

(*b*) That he has not failed to gain promotion to the first class of any Entrance school at the results of the annual examination of the second class in the last session.

(*c*) That he has left the school in which he last read with a transfer certificate, or (in case of a failed student) is in possession of the Registrar's receipt.

5. Every private candidate must pay a fee of Rs. 2 to the Head Master of the school at which he is to appear for the examination.

6. He must arrange for his identification to the officer conducting the test examination, and he should satisfy the Head Master as to his character, if necessary.

7. The Head Masters of the abovenamed schools are requested to sign the application forms of eligible candidates having a reasonable probability of success at the final examination, and forward the same to this office for countersignature *in time*. Private candidates should make their own arrangements to remit their examination fees and application forms to the Registrar of the Calcutta University.

CUTTACK,
The 17th July 1902.

JAGAT BANDHU LAHA,
Inspector of Schools, Orissa Division.

ORISSA DIVISION AND THE ORISSA TRIBUTARY MAHALS.

OFFICE MEMORANDUM OF THE INSPECTOR OF SCHOOLS, ORISSA DIVISION.

Rules for appearing at the F.A. and B.A. Examinations in 1902 for candidates from the Orissa Division and the Orissa Tributary Mahals who are not students of any affiliated institution.

DEPUTY INSPECTORS OF SCHOOLS, Sub-Inspectors of Schools and *bonâ fide* teachers of recognised English schools who have served as such for the full period of two academical years, or for a term of six months after an examination of the same class last held by the University in the case of those only who were admitted to a former examination of that class, will be admitted to the abovementioned examinations. All applications from school masters should be accompanied by certificates of length of service from the Secretaries of the schools in which they are employed, and should reach this office not later than the 5th January 1903. The application of a school master for permission to appear at the F.A. or B.A. Examination should be signed by him in the presence of the Secretary or a member of the Managing Committee of the school in which he is employed. The application should be forwarded to the office of the Inspector of Schools, Orissa Division, for countersignature, together with the Registrar's receipt to prove, if this be the case, that the candidate has appeared at the examination in a previous year, and the certificate in proof of his having passed the Entrance or F.A. Examination, as the case may be. Such papers will be sent back to him (the candidate), who will have to send them, together with the examination fee, to the Registrar of the University direct.

2. Candidates should read carefully the form of the certificate which the Inspector of the Division will sign, and should be careful to supply all information and documents required, including the Registrar's receipt, in the case of those who have been admitted to a former examination of the same class, without which the Inspector must decline to sign the certificate applied for.

3. By *bonâ fide* teachers of schools are to be understood teachers who hold regularly paid appointments in English schools teaching at least the Middle English course.

CUTTACK,
The 17th July 1902.

JAGAT BANDHU LAHA,
Inspector of Schools, Orissa Division.

NOTIFICATIONS OF THE BOARD OF REVENUE.

No. 2025B.

THE HON'BLE MR. BOURDILLON, C.S.I., *Member in charge.*

WITH reference to the Bengal Government Notification No. 3577Mis., dated the 28th July 1902, declaring that the 9th August 1902, the date fixed for the Coronation of His Majesty the King-Emperor, shall be a public holiday under the Negotiable Instruments Act, XXVI of 1881, it is hereby notified that the latest date for the payment of deposit money due on the opium to be sold on the 4th August 1902 will be the 11th instead of the 9th idem, as already notified in paragraph 3 of the Board's Notification No. 1716B., dated the 1st July 1902.

By order of the Board of Revenue, L. P.,

MIS. REVENUE DEPT.,
OPIUM (SALE) BRANCH,
CALCUTTA, *the 31st July 1902.*

H. WHEELER,
Secretary.

NOTIFICATION—No. 2047B.

Dated Calcutta, the 2nd August 1902

CUSTOMS.

THE HON'BLE MR. BOURDILLON, C.S.I.

Grant of rewards to Customs and other officers.

IN supersession of rules 10 and 11 issued under the provisions of the Sea Customs Act, VIII of 1878, and published at pages 31-32, Part I of the *Calcutta Gazette* of the 14th January 1885, the following revised rules which have been approved by the Government of India are published for general information.

By order of the Board of Revenue, L. P.,

H. WHEELER,
Secretary.

10. To officers of Customs or other persons, who are instrumental in detecting and bringing to notice infringements and evasions of the provisions of the Sea Customs Act, or of the Indian Merchandise Marks Act, rewards may, when it is considered that they are merited, be given in the following cases in which goods may be confiscated, or a penalty or fine imposed:—

(*a*) Smuggling or attempted importations of articles contrary to the provisions of section 18 or 19 of the Sea Customs Act.

(*b*) Breaches or attempted breaches of the provisions of the Sea Customs Act or of rules made thereunder when such breaches were probably intended to facilitate the importation or exportation of dutiable goods, or the removal of goods from bond without payment of full duty thereon.

(*c*) Breaches of the provisions of the Indian Merchandise Marks Act.

(*d*) False declaration of the contents of packages in regard to sort, quality, quantity, value, or other conditions.

(*e*) Undervaluation in a bill-of-entry or understatement of quantity in a shipping bill, affecting the amount of duty chargeable where such undervaluation or understatement is solely the result of accident or error.

11. (*a*) In each case the reward shall not exceed one-half of the realised value of the confiscated goods (if any), and of the penalty or fine imposed, and shall be so restricted that the balance shall suffice to cover all outstanding Government dues (if any), and any incidental charges incurred in consequence of the seizure of the goods.

(*b*) If, however, in any case the value of the confiscated goods, or the penalty or fine imposed, is not realised, or is only realised in part, and if the aggregate sum realised appears to be insufficient for the purpose of rewarding the officer of Customs and other person or persons who have been instrumental in detecting and bringing to light the case, the Chief Customs Authority, on the recommendation of the Customs Collector, may grant such reward or rewards not exceeding in the aggregate one-half of the estimated value of the confiscated goods (if any) and of the penalty or fine as he may think reasonable.

11A. The adjudication of rewards shall, in all cases, be made by the Chief Customs Officer. No reward shall be paid until three months have elapsed from the date of the confiscation of the goods or infliction of the penalty with reference to which it is to be paid. The payment to any person or persons in any case of a reward or rewards under these rules exceeding in the aggregate Rs. 500 shall require the previous sanction of the Local Government.

NOTICE.

No. 1963B.

IT is hereby notified for general information that rowanas for salt consigned to districts in the Orissa Division by the route of the Bengal-Nagpur Railway *viâ* the Shalimar salt pass-station should henceforth be surrendered to the officer in charge of that station, who should make them over to the Covenanted Deputy Collector of Howrah, through the proper channel, for return to the Board's office.

THE HON'BLE MR. BOURDILLON, C.S.I., *Member in charge.*

2. The practice of returning such rowanas to the consignors of salt after endorsement at Shalimar, in order that they may be sent by post to the Customs officers of the importing districts in the Orissa Division, will henceforth be discontinued.

By order of the Board of Revenue, L. P.,

MISC. REVENUE DEPT.,
SALT ROWANA BRANCH, CALCUTTA,
The 28th July 1902.

H. WHEELER,
Secretary.

No. 1994B.

NOTICE is hereby given that the Ninth Sale of Opium, the Provision of 1900-1901, will be held at the Government Opium Sale-room, No. 2 Bankshall Street, on Monday, the 1st September 1902, at 11 A.M., and will comprise 4,000 chests, viz.—

		Chests.
Opium manufactured at the Patna Factory, consisting of	...	2,000
Opium manufactured at the Ghazipur Factory, consisting of	...	2,000
Total	...	4,000

2nd.—The general conditions of the sale now advertised will be the same as usual. They may be ascertained by reference to the Notification issued on the 19th November 1901, and published in the *Government* and *Exchange Gazettes*, or on personal application at the office of the Board of Revenue.

3rd.—The latest dates for deposit and clearance will be the 6th and 16th September 1902, respectively, that is to say, no Bank of Bengal Receipts, Government Promissory Notes or other Public Securities that may be tendered for deposit in redemption of Promissory Notes given by purchasers in the sale-room will be received after 1-30 P.M. of Saturday, the 6th September 1902, and no Bank of Bengal Receipts in full payment of lots will be accepted after 3-30 P.M. of Tuesday, the 16th September 1902.

4th.—In addition to the quantity above advertised for sale, the following quantities, more or less, of the Opium manufactured at the Patna and Ghazipur Factories will be brought to sale down to December next on or about the dates specified below. The Board

of Revenue, however, reserve to themselves the right of altering these dates, should circumstances render it expedient to do so :—

DATES.	Manufactured at the Patna Factory ; about chests.	Manufactured at the Ghazipur Factory ; about chests.	Total ; about chests.
On or about Monday, 29th September 1902 ...	2,000	2,000	4,000
On or about Monday, 3rd November ,, ...	2,000	2,000	4,000
On or about Monday, 1st December ,, ...	2,000	2,000	4,000
Total ...	6,000	6,000	12,000

By order of the Board of Revenue, L. P.,

H. WHEELER, *Secretary.*

BOARD OF REVENUE, L. P., CALCUTTA, *the 29th July 1902.*

ELECTION OF MUNICIPAL COMMISSIONERS.

NOTIFICATION.

IT is hereby notified for general information that a bye-election will be held in Ward No. F of the Jamalpur Municipality, in the district of Monghyr, on Monday, the 20th October 1902, for the election of a Municipal Commissioner in place of Mr. J. J. Hatt, resigned.

SAKHAWAT HOSSEIN, for *Commissioner on tour.*

COMMR.'S OFFICE, BHAGALPUR, *the 29th July 1902.*

NOTIFICATION.

IT is hereby notified for general information that a bye-election will be held in Ward No. I of the Deoghur Municipality, in the district of the Sonthal Parganas, on Friday, the 24th October 1902, for the election of a Municipal Commissioner in place of Babu Akshoy Kumar Roy Chowdhury, deceased.

SAKHAWAT HOSSEIN, for *Commissioner.*

COMMR.'S OFFICE, BHAGALPUR, *the 29th July 1902.*

NOTIFICATION.

IT is hereby notified for general information that the gentlemen named below have been appointed, under rule 21 (*b*) of the rules for the management of Hospitals and Charitable Dispensaries, to be members of the Chandpur Dispensary Committee, *vice* Mr. P. J. Shircare and Babu Kali Prasanna Sen, resigned and Babu Purna Chandra Bhattacharji, deceased :—

Babu Sarat Chandra Majumdar. | Babu Nabin Chandra Mukherji.
Babu Barada Charan Das Gupta.

R. S. GREENSHIELDS, *Offg. Commissioner.*

COMMR.'S OFFICE, CHITTAGONG, *the 24th July 1902.*

NOTIFICATION.

IT is hereby notified for general information that, under Rule 21 (*b*) of the revised Dispensary Manual, the following gentlemen are appointed members of the Committee for the management of the Sagrampur Dispensary, in the district of Monghyr :—

1. The Civil Surgeon of Monghyr, *ex-officio.*
2. Mr. F. B. Robinson.
3. ,, H. Brae.
4. Babu Ramjiban Sannyal.
5. Babu Tapsi Narayan Singh.
6. ,, Ram Dhari Bhagat.
7. ,, Nund Kumar Lal.
8. ,, Prayag Bhagat.
9. Mr. H. L. Curtis.

SAKHAWAT HOSSEIN, for *Commissioner on tour.*

COMMR.'S OFFICE, BHAGALPUR, *the 29th July 1902.*

NOTIFICATION.

IT is hereby notified for general information, under Rule 21 (*b*) of the Rules for Hospitals and Dispensaries, that the Patuakhali Charitable Dispensary Managing Committee have, at their meeting held on the 6th June 1902, appointed Babu Nabin Chandra Sen to be a member of the said Committee, *vice* Babu Kailash Chanda Sen, deceased.

GUNGA N. ROY, *Persl. Asst.*, for *Commissioner*.

DACCA COMMR.'S OFFICE, *the 1st August 1902*.

NOTIFICATION.

BABU THAKUR PRASAD, Pleader, has been appointed a member of the Managing Committee of the Gaya Pilgrim Hospital, *vice* Mr. A. Ogilvy, transferred.

L. HARE, *Commissioner*.

PATNA COMMR.'S OFFICE, BANKIPUR, *the 29th July 1902*.

The Calcutta Gazette.

WEDNESDAY, AUGUST 6, 1902.

PART IA.

Orders and Notifications by the Government of India, &c.

[*Reprinted from the "Gazette of India."*]

The following orders, issued by the Government of India in the Home Department, are republished for general information.

C. E. BUCKLAND,
Chief Secy. to the Govt. of Bengal.

NOTIFICATIONS.

PUBLIC.

Simla, the 31st July 1902.

No. 2385.—In exercise of the powers conferred by section 27 of the Indian Arms Act, 1878 (XI of 1878), the Governor-General in Council is pleased to direct that the following proviso be added to the Notification of the Government of India in the Home Department, No. 967, dated the 13th April 1900, namely:

"Provided that nothing in this Notification shall be deemed to apply to small parcels of arms or ammunition in respect of which the Persian Consul-General in London has certified in writing that permission has been granted by the Persian Government for their importation into Persia, and that they are intended in good faith for the private and personal use of the consignee."

JUDICIAL.

The 31st July 1902.

No. 1174.—The Hon'ble Mr. Justice Harington, a Judge of the High Court of Judicature at Fort William in Bengal, is granted privilege leave for one month, with effect from the 5th August 1902.

No. 1180.—Under the provisions of the Indian High Courts Act, 1861 (24 and 25 Vict., Cap. 104), section 7, the Governor-General in Council is pleased to appoint the Hon'ble Mr. Saroda Churn Mitter, at present officiating as a Judge of the High Court of Judicature at Fort William in Bengal, *vice* the Hon'ble Sir H. T. Prinsep, Kt., to officiate, with effect from the date of his relief by the latter as a Judge of that Court, *vice* the Hon'ble Mr. Justice Sale, who has been granted furlough up to the 4th September 1902.

ECCLESIASTICAL.

The 31st July 1902.

No. 300.—The Reverend T. Scott, M.A., Officiating Presidency Senior Chaplain, Church of Scotland, Bengal, is confirmed in that appointment, with effect from the 28th July 1902.

J. P. HEWETT,
Secy. to the Govt. of India.

The following orders, issued by the Government of India in the Foreign Department, are republished for general information.

C. E. BUCKLAND,
Chief Secy. to the Govt. of Bengal.

NOTIFICATIONS.

Simla, the 30th July 1902.

No. 1261G.—With the sanction of His Majesty's Government, the Governor-General in Council is pleased to recognise the appointment of Mr. Cecil Schrager as Honorary Vice-Consul for Spain at Calcutta.

No. 1264G.—With reference to Notification No. 817G., dated the 12th May 1902, the provisional recognition by the Government of India of the appointment of Mr. Frederick Voigt as Vice-Consul for Peru at Calcutta has been confirmed by His Majesty's Government.

The 31st July 1902.

No. 1269G.—With the sanction of His Majesty's Government, the Governor-General in Council is pleased to recognise provisionally the appointment of Monsieur A. de Koster as Vice-Consul for the Netherlands at Calcutta with the personal rank of Consul.

H. S. BARNES,
Secy. to the Govt. of India.

The following order, issued by the Government of India in the Military Department, is republished for general information.

C. E. BUCKLAND,
Chief Secy. to the Govt. of Bengal.

Simla, the 1st August 1902.

VOLUNTEER CORPS.

APPOINTMENTS, PROMOTIONS AND RESIGNATIONS.

No. 713.—Northern Bengal Mounted Rifles—

John Gloag Robertson, Gentleman, to be Second-Lieutenant, with effect from the 1st May 1902, *vice* Bruce, transferred to the supernumerary list.

E. G. BARROW, *Major-General,*
Secy. to the Govt. of India.

The Calcutta Gazette.

WEDNESDAY, AUGUST 6, 1902.

PART I B.

MUNICIPAL AND LOCAL.

NOTIFICATIONS.

No. 1947L.S.-G.—The 29th July 1902.—It is hereby notified for general information that, in exercise of the power conferred on him by section 139 of the Bengal Local Self-Government Act, III of 1885, the Lieutenant-Governor is pleased to confirm the following bye-law, which has been framed by the District Board of Shahabad under that section :—

Shahabad.

"Any person who, during the dry season of the year, *i.e.*, from 1st November to 15th June, drives any cart along any District Board road, along the side of which a cart track has been provided by the Board for the use of carts, shall be liable to a fine not exceeding Rs 20."

No. 1978L.S.-G.—The 30th July 1902.—It is hereby notified for general information that, under rule 32 of the rules framed under clause (*a*), section 138 of the Bengal Local Self-Government Act, III of 1885, the Lieutenant-Governor is pleased to fix the following dates for holding elections of members of Local Boards in the district of Patna :—

Patna.

District.	Local Board.	Date of election.
Patna ...	Sadar, Barh, Bihar ...	29th September 1902.
	Dinapur ...	27th November „

No. 2003L.S.-G.—The 31st July 1902.—It is hereby notified that, under section 7 of the Bengal Local Self-Government Act, III of 1885, the following gentlemen have been elected to be members of the District Board of Noakhali :—

Noakhali.

Local Boards by which elected.	Names of members.
Sadar ...	Babu Karuna Chandra Das. „ Jashoda Kumar Rai. „ Chandra Kumar Basu Choudhuri. Maulvi Muzafar Ahamed.
Feni ...	Babu Prokas Chandra Sinha. Maulvi Abdul Majid.

The following gentlemen are appointed under section 7 of the Act to be members of the Board :—

The Deputy Inspector of Schools.
The Civil Medical Officer.
The Road Cess Deputy Collector.
Khan Bahadur Maulvi Bazlar Rohim.
Rai Rajkumar Datta Bahadur.
Maulvi Abdul Haq Khan.

No. 2028M.—The 1st August 1902.—It is hereby notified that, under section 17 of the Bengal Municipal Act, III of 1884, as modified up to 1st November 1896, the Lieutenant-Governor is pleased to appoint the following gentlemen to be Commissioners of the Kamarhati Municipality, in the district of the 24-Parganas:—

24-Parganas.

Mr. J. C. Stewart.	Babu Nilratan Audhicary.
„ W. Lamond.	„ Nritya Gopal Ghosal.
Babu Satya Charan Chatterji.	„ Nilkanta Chatterjee.
Rai Prosonno Kumar Banerjee Bahadur.	„ Kali Prosonna Mukherjee.

Babu Thakurdas Banerjee.

2. Under section 23 (1) of the Act the Lieutenant-Governor is pleased to appoint Mr. J. C. Stewart to be the Chairman of the Municipality.

No. 2033M.—The 4th August 1902.—It is hereby notified for general information that the Lieutenant-Governor intends, in exercise of the power vested in the Local Government by section 85 of the Bengal Municipal Act, III of 1884, as modified up to 1st November 1896, and on the recommendation of the Commissioners of the Purulia Municipality, in the district of Manbhum, made at a meeting, to sanction the imposition by the Commissioners, under section 85 (*b*) of the Act, of a rate on the annual value of holdings within the Municipality in lieu of the tax upon persons occupying holdings within the Municipality according to their circumstances and property which is now in force within the Municipality, unless good reasons are shown to the contrary within one month from the date of the publication of this notification within the aforesaid Municipality.

Manbhum.

No. 2049L.S.-G.—The 4th August 1902.—It is hereby notified that, under section 15 of the Bengal Local Self-Government Act, III of 1885, the Lieutenant-Governor is pleased to appoint the following gentlemen to be members of the several Local Boards in the district of Tippera:—

Tippera.

Local Boards.	Names of members.
Sadar ...	Syed Husan Haidar Chaudhari.
	Mr. P. J. DeLanney.
	Babu Ananga Mohan Naha.
	„ Sarat Chandra Bose.
	Munshi Ali Ahmed.
	Syed Abdul Jubbar.
	Babu Giris Chandra Sen.
	„ Jagat Bandhu Das.
	„ Anukul Chandra Roy.
	„ Sris Chandra Banerji.
	„ Basanta Kumar Mazumdar.
	„ Khetra Mohan Rai.
Brahmanbaria ...	Babu Prasanna Kumar Das Gupta.
	Maulvi Syed Waliulla.
	Babu Braja Gopal Chatterji.
	„ Dina Bandhu Dutta.
	„ Jagat Chandra Nandi.
	„ Meghnath Chaudhari.
	„ Banga Chandra Sen.
	„ Mahendra Chandra Dutta Rai.
	Munshi Abdul Rouf.
Chandpur ...	Babu Radha Madhab Sinha.
	„ Satya Charan Dutta.
	„ Hara Doyal Nag.
	Chaudhari Abul Kasim Badiuzzama.
	Babu Basanta Kumar Ghosh.
	„ Durga Prosad Datta.

No. 2053M.—The 5th August 1902.—It is hereby notified that, under section 27 of the Bengal Municipal Act, III of 1884, as modified up to 1st November 1896, the Lieutenant-Governor is pleased to appoint Babu Rasik Lal Ghosh to be the Chairman of the Budge-Budge Municipality, in the district of the 24-Parganas, *vice* Mr. R. Duncan, resigned.

24-Parganas.

No. 2063M.—The 5th August 1902.—Whereas a Notification No. 364T.—M., dated the 9th May 1902, was published at page 103, Part 1B of the *Calcutta Gazette* of the 14th idem, declaring the intention of the Lieutenant-Governor to revise the boundaries of the Kotchandpur Municipality, in the district of Jessore, so as to include within its limits the following area of Kashipur and Nandagram, and whereas no objection has been raised to the proposal within six weeks from the date of the publication of the above notification within the aforesaid Municipality, it is hereby notified for general information that, in exercise of the power vested in the Local Government by section 9A (2) of the Bengal Municipal Act, III of 1884, as modified up to

Jessore.

1st November 1896, and in accordance with the recommendation of the Commissioners of the Kotchandpur Municipality, made at a meeting, the Lieutenant-Governor sanctions the above proposal :—

Boundaries of the area to be included—

On the north—Barabamandaha.
On the east—Rangiarpota and Elangi.
On the south—Balabaria.
On the west—Solemanpur and Bajebamandaha.

2. The revised boundaries of the Municipality after the inclusion of the above area will be as follows :—

On the west—Baluhar, Ramchandrapur, Kagmari, and Jagannathpur.
On the south—Jagannathpur and thence from the junction of Baromasiya khal with the Bhairav river across to the right bank of the Bhairav river and along the right bank northwards, eastwards and southwards to the boundary of Pashpatila; thence by Pashpatila and Balabaria.
On the east—Elangi, Rangiarpota, and Jagadishpur.
On the north—Balarampur, Rudrapur, Murutiya, Fulbari, Parla, and Baluhar.

24-Parganas.

No. 2067 M.—The 5th August 1902.—It is hereby notified that, under section 17 of the Bengal Municipal Act, III of 1884, as modified up to 1st November 1896, the Lieutenant-Governor is pleased to appoint the following gentlemen to be Commissioners of the Bhatpara Municipality, in the district of 24-Parganas :—

Mr. T. W. Clark.
„ A. D. Kidd.
„ W. Griffin.
„ J. Addison.
Mr. D. Fairweather.
„ D. Gibb.
Babu Shama Churn Bhattacharji.
„ Mahendra Nath Gosswami.
Babu Tarak Nath Chatterjee.

E. W. COLLIN,
Offg. Secy. to the Govt. of Bengal

The Calcutta Gazette.

WEDNESDAY, AUGUST 6, 1902.

PART II.

Advertisements.

[N. B.—Advertisements, Notices, &c., intended for insertion in this part of the Gazette cannot be received after Noon on Monday.]

LAND SALE NOTICES.

Advertisement of Sale.

NOTICE is hereby given that the proprietary right of Government, as specified in the conditions of sale below, to the undermentioned estate, situated in the district of Rajshahi, will be put to sale at the Rajshahi Collectorate on the 1st September 1902, corresponding with 16th Bhadra 1309 (B.S.)

The purchaser will be subject to the following conditions of sale:—

Conditions of Sale.

1st.—The estate to be sold to the highest bidder above the upset price, which will be fixed by the Collector at the time of sale. The purchaser of this estate will be considered as the proprietor of the estate, and the entire proprietary right of Government in such estate will be transferred to him, subject to the revenue fixed in perpetuity.

2nd.—The sale to be subject to existing leases and to the rights conferred by the settlement proceedings and by the laws in force, and purchasers to be bound to respect the rights of resident cultivators who have signed the schedule of assessment prepared by the revenue authorities.

3rd.—If the amount of purchase-money do not exceed Rs. 100, the whole amount to be paid down at once.

4th.—If the amount of purchase-money exceed Rs. 100, one-fourth of the amount bid to be immediately deposited. If the balance be not paid by noon of the fifteenth day after the sale, reckoning the day of sale as one, or, if that day be a close holiday, then by noon of the first succeeding office day, the sale is to be cancelled (the sum deposited being forfeited to Government), and the estate to be again put up to sale at the risk of the defaulting purchaser, after issue of advertisement, as in the case of original sale.

Number on the district roll.	Name of estate and pargana.	Approximate area in acres.	Government revenue assessed.	Remarks.
1991	Mauza Bhadum, pargana Mehamanshahi ...	A. R. P. 179 3 10$\frac{2}{11}$	Rs. A. P. 357 9 6	

Rajshahi Collectorate, the 16th July 1902.

F. R. Roe, Collector.

Notification A.

NOTICE is hereby given, under sections 6 and 13, Act XI of 1859, that the undermentioned estates and shares of estates in the district of Khulna will be put up for sale at the office of the Collector of that district on the 15th September 1902 at 12 A.M. for arrears of revenue and other demands which by law are realisable as arrears of land revenue.

When in columns 5, 7, and 9 of the appended statement it is stated that only a share is to be sold, it is to be understood that a separate account is kept for that share :—

Tauzi No.	Name of mahal and pargana.	Sadar jama of whole estate.	Whether the whole estate is to be sold.	If only a share is to be sold, specification of such share or shares.	Names of proprietors of property to be sold.	If only a share is to be sold, the sadar jama of such share.	If the whole estate is to be sold, the arrears due from it.	If only a share is to be sold, the arrears due from it.
1	2	3	4	5	6	7	8	9
		Rs. A. P.				Rs. A. P.	Rs. A. P.	Rs. A. P.
77	Dhuliapur, pargana Dhuliapur.	...	No ..	Share No. 1—5 annas	Promotho Nath Pal Choudhury and others	5,402 2 9½	.. ..	2,412 15 4½
32	Khalia chuck, pargana Sundarbans.	.. .	No ...	Share No 2—8 annas .	Kamalbasini Dasi and others.	672 2 6	. .	86 8 8

Khulna Collectorate, the 16th July 1902. S. C. MUKERJEE, Collector.

Notification A.

NOTICE is hereby given, under sections 6 and 13, Act XI of 1859, that the undermentioned estates and shares of estates in the district of Tippera will be put up for sale at the office of the Collector of that district on the 26th September 1902 at 12 o'clock for arrears of revenue and other demands which by law are realisable as arrears of land revenue.

When in columns 5, 7 and 9 of the appended statement it is stated that only a share is to be sold, it is to be understood that a separate account is kept for that share.

Tauzi No.	Name of mahal and pargana.	Sadar jama of whole estate.	Whether the whole estate is to be sold.	If only a share is to be sold, specification of such share or shares.	Names of proprietors of property to be sold.	If only a share is to be sold, the sadar jama of such share.	If the whole estate is to be sold, the arrears due from it.	If only a share is to be sold, the arrears due from it.
1	2	3	4	5	6	7	8	9
385	Taluq Sribatsha Das, pargana Gunanundi.	Rs. A. P. 1,233 11 7	Whole ...	... ..	Srimati Monyakhoya Chowdhurani, manager on behalf of minor Harendra Chandra *alias* Hur Kumar Pal Chowdhury and others.	Rs. A. P. ..	Rs. A. P. 18 12 2	Rs. A. P. .....
480	Gazipur Monipur Chur No. 24-71, pargana Maizardi.	1,233 1 0	Do. ...	.....	Kashi Chandra Pal Chowdhury and others.	... ..	84 14 4	... .
1925	Char near Nogarerkandi No. 211, pargana Uttershahapur.	1,296 10 9	Do. ...	.. .	Ishan Chandra Dutt and others.	..	202 9 4	... .
1933-21	Pargana Bardakhat Doulatpurjoar: the term is from 1261 to 1310 B.S.	1,379 3 10	Do. ...	.	Bepra Charan Ghosh and others.	... ..	171 1 0	.....
2296	Shonapur Tajpur, pargana Zazira.	870 10 0	Do. .		Tojammal Ali Chowdhury and others.	.....	200 0 0	.....

Tippera Collectorate, the 26th July 1902. H. W. SCHOOPE, Collector.

Notice of Sale for Arrears of Revenue.

NOTICE is hereby given, under section VI, Act XI of 1859, read with Act VII (B.C.) of 1868 and Act II (B.C.) of 1871, that the undermentioned Noabad taluks within the Cox's Bazar khas mahal, in the district of Chittagong, will be put up to public and unreserved sale at the Collector's office of that district on the 2nd September 1902 for arrears and cesses remaining unpaid on the $\frac{25}{26}$th May 1902 :—

Name of tenure.	Name of mauza, thana and mahal.	Name of talukdar.	SADAR JAMA.		AMOUNT OF ARREAR FOR WHICH THE TENURE IS TO BE SOLD.		
			Rent.	Cesses.	Rent.	Cesses.	Total.
1	2	3	4	5	6	7	8
			Rs. A. P.	Rs. A. P.	Rs. A. P.	Rs. A. P.	Rs. A. P.
47 / 10—80	Thana Ramoo, mauza Khuruskel, taluk Tajanmisa.	Mozaffar Ahmad, son of Asharaf Ali Chowdhuri, of Chowfoldondi.	2,648 8 0	176 13 0	590 6 0	58 15 6	649 5 6
296 / 289—302	Thana Chakaria, mauza Rajakhali, taluk Bibi Espruk.	Nezamat Ali Chowdhuri, son of Mohammad Rafi Chowdhuri, of Bora Khim.	1,005 10 0	215 13 6	1,578 4 0	431 9 0	2,009 13 0

Chittagong, the 19th July 1902. *f.*, H. VERNEDE, Covtd. Depy. Collr., *for* Collr.

NOTICE is hereby given, under sections 6 and 13, Act XI of 1859, that the undermentioned estate or share of estate in the district of Darbhanga will be put up for sale at the office of the Collector of that district on the 5th September 1902, corresponding with 17th Bhado 1309 Fasli, at 12 A.M. on Friday for arrears of revenue and other demands, which by law are realizable as arrears of land revenue.

When in columns 5, 7 and 9 of the appended statement it is stated that only a share is to be sold, it is to be understood that a separate account is kept for that share. All other shares besides that specified will be excluded from the sale.

Tauzi No.	Name of estate, thana or pargana.	Sadar jama of whole estate.	Whether the whole estate is to be sold.	If only a share is to be sold, specification of such share or shares.	Names of proprietors of property to be sold.	If only a share is to be sold, the sadar jama of such share.	If the whole estate is to be sold, the arrears due from it.	If only a share is to be sold, the share due from it.
1	2	3	4	5	6	7	8	9
11810	Ahiari, pargana Bharmara, thana Darbhanga.	Rs. A. P. 1,831 2 4	Whole	.....	Lala Binda Prasad, Lala Shew Charan Lal, Lala Chedi Lal, Lala Sital Prasad, Lala Jagar Nath Prasad, &c.	...	Rs A. P. 457 11 9	.....

Darbhanga Collectorate, the 24th July 1902.

S. L. MADDOX, Collector.

APPENDIX XXX.

[See Chapter III, Rule 9.]

Advertisement of Sale.

NOTICE is hereby given that the undermentioned plots of land, no longer required by Government, situated along the Assam-Bengal Railway, in the district of Chittagong, will be put up to sale at 11 o'clock on Monday the 2nd September 1902, corresponding with the 6th of Ashwin 1309 B.S., at the Collector's office, Chittagong.

The purchasers of the several plots of land will be subject to the following conditions :—

1st.—The purchasers will have no power to make any excavation on the land nearer than fifteen feet from the Railway fencing, or plough the land closer than three feet from its foundation.

2nd.—If the amount of purchase-money does not exceed Rs. 100, the whole amount must be paid down at once.

3rd.—If the amount of purchase-money exceeds Rs. 100, one-fourth of the amount must be immediately deposited. If the balance be not paid by noon of the fifteenth day after the sale, reckoning the day of sale as one, or if that day be a close holiday, then by noon of the first succeeding office day, the sale shall be cancelled, the sum deposited being forfeited to Government and the lot again put up for sale at the risk of the defaulting purchaser, after issue of advertisement, as in the case of original sale.

4th.—The plots of land will be sold revenue-free to the highest bidders.

5th.—The purchasers shall be put in possession on receipt by the Collector of the orders of the Board confirming the sales.

Consecutive lot number.	Name of district.	Mauza.	Number of mile on which land is situate.	Situated on which side of the Railway.	Approximate area of lot in kanis and acres.		Land excluded from sale from each plot.		Commencement and termination of lot.	Boundary of lot.
					Maghi kani.	Acre.	Reasons for exclusion.	A. R. P.		
1	2	3	4	5	6		7		8	9
					Kani.	A. R. P.				
1	Chittagong ...	Bhatiary	8th mile	East side	43 83	17 2 5	Nil	Nil	Nil	Nil.
2	Ditto ...	Sonaicherry ...	14th do.	West side	28 67	11 1 27	,,	,,	,,	,,
3	Ditto ...	Bansberia	18th do.	Ditto	25·68	10 1 3	,,	,,	,,	,,
4	Ditto ...	Katear	20th do.	East side	35·80	14 1 11	,,	,,	,,	,,
5	Ditto ..	Terial	27th do.	West side	29 37	11 2 38	,,	,,	,,	,,
6	Ditto ..	Wahedpur	32nd do.	Ditto	25·31	9 3 29	,,	,,	,,	,,
7	Ditto ..	Gobania . .	36th do.	Ditto	23 30	9 1 11	,,	,,	,,	,,
8	Ditto ...	Asamnagar	45th do.	East side	21·10	8 1 30	,,	,,	,,	,,

Chittagong, the 26th July 1902.

E. GEAKE, Collector.

SALE of patni rights of Biby Jorao Kumari Sahiba in Estate Mahomed Aminpur, tauzi No. 3989, which include the patni right in Baidyabti *hát* in village Shooraphuli in thana Serampore, district Hooghly.—

No. of estate.	Name and residence of judgment-debtor.	Specification of judgment-debtor's interest to be sold.	Date fixed for sale.	Nature and amount of arrears.	Remarks.
3989	S. M. Biby Jorao Kumari Sahiba, of 147 Burabazar, Cotton Street, Calcutta.	The entire patni right held under Zamindar Maharaja Sir Jotindro Mohon Tagore, K.C.S.I., to which she pays Rs. 46,155-14-6 annually as her patni rent. This patni includes also the patni right in Baidyabati *hát* in village Shooraphuli in thana Serampore, district Hooghly.	25th September 1902, corresponding to B.S. 9th Aswin 1309.	Due on account of engagements Nos 109, 116, 117, 162, 242, 243 and 311 in connection with the Howrah Drainage Scheme and engagement No. 1449 in connection with the Rajapore Drainage Scheme, Rs. 41,014-7-10.	Howrah Drainage Certificate Cases Nos. 1125 of 1898-99, 186 187, 273, 104 and 274 of 1901-1902 and 494 and 214 of 1900-1901.

MAHESH CH. SEN, Certificate Officer, Hooghly,

Hooghly Collectorate, Certificate Department, the 21st of July 1902.

Notification A.

NOTICE is hereby given, under sections 6 and 13, Act XI of 1859, that the undermentioned estates and shares of estates in the district of Monghyr will be put up for sale at the office of the Collector of that district on the 18th August 1902 at noon for arrears of revenue and other demands which by law are realisable as arrears of land revenue.

When in columns 5, 7 and 9 of the appended statement it is stated that only a share is to be sold, it is to be understood that a separate account is kept for that share.

Tauzi No.	Name of mahal and pargana.	Sadar jama of whole estate.	Whether the whole estate is to be sold.	If only a share is to be sold, specification of such share or shares.	Names of proprietors of property to be sold.	If only a share is to be sold, the sadar jama of such share.	If the whole estate is to be sold, the arrears due from it.	If only a share is to be sold, the arrears due from it.
1	2	3	4	5	6	7	8	9
		Rs. A. P.		*Permanently-settled Estates.*		Rs. A. P.	Rs. A. P.	Rs. A. P.
226	Katri Akhtayarpur, pargana Maldeh.	5,088 15 0	.....	The residuary share in the following mauzas :—	Babu Gopal Lal and others.	612 13 0	.....	35 9 0
				A. G. C. B. 1. Katri Akhtayarpur ... ... 1 14 19 3 2 Maldeh Khurd ... ... 1 11 4 3 3. Maldeh buzurg asli main nagdeh, Dayanut, Chak dakhli ... .. 1 11 4 3 4. Sarba buzurg, Sarba khurd and Kalayanpur Sarba asli main Jamalpur, buzurg and Jamalpur khurd dakhli ... ... 1 11 4 3 5. Belao Subhanpur, Belao main Lutfpur and Padumpur and Bhimpur 1 11 4 3 6. Belari and Mohamedpur Belari ... 1 14 19 3 7. Badi chak dakhli Belari ... ... 1 14 19 3 8. Saidi ... ... 1 14 19 3 9. Kishunpur 1 14 19 3			
				All other shares besides that specified above are excluded from the sale				
537	Shakerpur, pargana Pharkia.	1,096 4 0	Whole ...	.....	Birj Lal Singh and others.	... ..	11 3 5	.....
626	Shirnia, pargana Balia.	1,073 12 0	.....	7a. 9g. 1c. 1k. ijmali share	Ganga Pershad Sahu and others.]	501 1 0	.....	151 11 0
				All other shares besides that specified above and the separate account No. 1 of Nawab Singh for Rs. 286-6 are excluded from the sale.				
815	Sihanwan Karari, pargana Malki.	1,120 7 0	.....	Ijmali share which cannot be specified excluding the separate accounts—	Lil Kanth Chowdhry and Sheb Chowdhry and others.	518 5 0	.....	133 1 6
				Rs. A. 2. Of Chettru Singh ... ... 112 0 3. ,, Kali Pershad Singh ... ... 213 6 5. ,, Kharag Singh . . ..) ... 5 4 6. ,, Fazal Rahman, *alias* Sageeruddin 2 5 7. ,, Gumani Rai ... ... 4 6 8. ,, Mahainah Singh, &c. ... ... 43 9 9. ,, Bhim Singh, &c. . . .. 9 10 10. ,, Sibu Singh, &c. ... . 74 7 11. ,, Bhagwan Pershad, receiver of the estates of Suja Mahanth . . ... 31 15 12. ,, Khanter Singh, &c. ... ... 20 4 13. ,, Gano Singh, &c. . . .. 79 0 Total ... 602 2			
				All other shares, besides the ijmali share specified above and separate account No. 6 for Rs. 2-5, and separate account No. 10 for Rs. 74-7, are excluded from sale.				
1072	Baikunthpur, pargana Bhusari.	1,193 3 0	Whole ...	.....	Abunasar Jalaluddin, Manager of Mussamat Girjabati Kumri and others.	.....	17 11 1	.....
1106	Qasba Sheik Dih Haitampur, pargana Masjidpur.	1,026 5 0	.....	Ijmali share consisting of Sheikdih 16a., Hetampur 12a. 5g.	Turant Lal, &c. ...	946 9 0	.....	315 10 0
				All other shares besides that specified above are excluded from sale.				
4420	Diara Gang Barar Sihanwan, pargana Malki.	2,881 8 0	.....	5a. 0g. 12r. ijmali share	Kalli Singh and others.	953 14 0	.....	45 9 6
				All other shares besides that specified above and the separate account No. 6 of Jhaman Singh for Rs. 207-6 are excluded from sale.				
				Temporarily-settled Estates.				
1321	Tarapur Diara, pargana Monghyr.	13,797 13 0	Whole ...	.....	Mussamat Jainti Kumri, of Ulao, and others.	.....	383 14 0	.....
1406	Bhawanundpur *alias* Ramduri, pargana Malki.	10,660 15 0	Do. ...	... ..	Jagatdhar Narayan Pershad, under the guardianship of mother Mussamat Tirbeni Kumri.	.....	5,340 8 8	.....
1433	Akbarpur Barari, pargana Malki.	1,536 11 0	Do. ...	.....	Udwant Singh and others.	.....	95 11 6	.....

Monghyr Collectorate, the 12th July 1902.

F. J. JEFFRIES, Offg. Collector.

Notification B.

NOTICE is hereby given, under sections 5 and 13, Act XI of 1859, that unless the arrears mentioned below are paid on or before the next latest date of payment, viz., the 28th June 1902, the undermentioned estates or shares of estates in the district of Tippera will be put up for sale at the office of the Collector of that district on the 26th September 1902 at 12 o'clock for the said arrears.

When in columns 5, 7 and 9 of the appended statement it is stated that only a share is to be sold, it is to be understood that a separate account is kept for that share.

Tauzi No.	Name of mahal and pargana.	Sadar jama of whole estate.	Whether the whole estate is to be sold.	If only a share is to be sold, specification of such share or shares.	Names of proprietors of property to be sold.	If only a share is to be sold, the sadar jama of such share.	If the whole estate is to be sold, the arrears due from it.	If only a share is to be sold, the arrears due from it.	Nature and amount of demand for which to be sold.
1	2	3	4	5	6	7	8	9	10
		Rs. A. P.				Rs. A. P.	Rs. A. P.	Rs. A. P.	Rs. A. P.
1925	Pargana Uttar Sahapur char near Nagarer Kandi, No. 211.	1,296 10 9	Whole ...	.....	Ishan Chandra Datta and others.	... ..	202 9 4	.....	202 9 4

Tippera Collectorate the 29th May 1902.

H. W. SCROOPE, Offg. Collector.

Notification A.

NOTICE is hereby given, under sections 6 and 13, Act XI of 1859, that the undermentioned estates and shares of estates in the district of Muzaffarpur will be put up for sale at the office of the Collector of that district on the 8th September 1902, corresponding with 20th Bhado 1309 F.S., for arrears of revenue and other demands which by law are realisable as arrears of land revenue.

When in columns 5, 7 and 9 of the appended statement it is stated that only a share is to be sold, it is to be understood that a separate account is kept for that share.

Tauzi No.	Name of mahal and pargana.	Sadar jama of whole estate.	Whether the whole estate is to be sold.	If only a share is to be sold, specification of such share or shares.	Names of proprietors of property to be sold.	If only a share is to be sold, the sadar jama of such share.	If the whole estate is to be sold, the arrears due from it.	If only a share is to be sold, the arrears due from it.
1	2	3	4	5	6	7	8	9
		Rs. A. P.				Rs. A. P.	Rs. A. P.	Rs. A. P.
908 Rs.	Amwa Kalan Newazun, pargana Babra Champaran.	2,000 12 9	... .	Residuary share, 5a. 7p. ... ... All other shares besides that specified will be excluded from sale.	Babu Isre Prosad and others.	698 2 9	.....	17 9 7
1680	Baijnathpur Krishn Coomar, pargana Gadhsund.	671 8 1	The whole	...	Babu Durga Coomar Upadhya and others.	... ..	161 3 0	.....
				A. G. C. KT.				
3485 Rs.	Pojhia-Basunt, Chukla Gurjaul, pargana Bisara.	1,693 10 7	.....	Residuary share— Pojhia-Basunt ... ... 5 1 2 2 Barehia and Pojhia Zamin ... ... 5 1 2 2 Jahanabad ... ... 5 1 2 2 Ghataro-khas-zamin ... 5 1 2 2 Chuk Rahmat ... ... 5 1 2 2 Hansi Gharam ... ... 5 1 2 2 Ghataro doolum ... ... 3 16 2 1 Raghoonathpur ... ... 3 16 0 0 All other shares besides that specified will be excluded from sale.	Babu Zoolumdhari Prosad Singh and others.	537 3 8	.....	106 3 5
5150	Poorab Chhupra Vishwnath Singh, pargana Nanpur.	642 8 7	The whole	... ..	Babu Dabi Prosad Singh and others.	.....	83 10 9	.....
11277	Chatarbhoojpur Bhairo Missar, pargana Rutti.	648 12 2	Ditto .		Rai Manindra Bahadur, minor under the guardianship of Musamat Goolab Kunar, mother, and Babu Moti Chand and others.	... ..	849 3 2	.....
11714	Kamaldah, pargana Tirsath.	865 13 4	Ditto ...	. . .	Mirza Nazir Hossen and others.	.....	207 2 10	.....

Muzaffarpur Collectorate, the 25th July 1902.

E. V. LEVINGE, Collector.

Notification.

NOTICE is hereby given, under sections 6 and 13, Act XI of 1859, that the undermentioned estates and shares of estates in the district of Shahabad will be put up for sale at the office of the Collector of that district on Thursday, the 28th August 1902, at 12 noon, corresponding with 9th Bhado 1309 F., for arrears of revenue and other demands which by law are realizable as arrears of land revenue.

When in columns 5, 7 and 9 of the appended statement it is stated that only a share is to be sold, it is to be understood that a separate account is kept for that share and the other share or shares in the estate are excluded from sale.

Tauzi No.	Name of mahal and pargana.	Sadar jama of whole estate.	Whether the whole estate is to be sold.	If only a share is to be sold, specification of such share or shares.	Names of proprietors of property to be sold.	If only a share is to be sold, the sadar jama of such share.	If the whole estate is to be sold, the arrears due from it.	If only a share is to be sold, the arrears due from it.
1	2	3	4	5	6	7	8	9
						Rs. A. P.	Rs. A. P.	Rs. A. P.
434	Mahuli Khurd, pargana Arrah	550 0 0	Whole ..	.....	Ramharan Singh and others.	.....	190 15 6	.....
763	Koilwar, pargana Barhgawan.	7,770 12 7	Do. ..	.....	Kazi Mohamad Wahid Asgraf, Bishun Persbad, Seri Maharani Beni Parshad Kuari, Babu Saligram Singh and others, proprietors of 16 annas.	.....	*L. R. 1,053 5 11 T. M. 4 8 0 Do. 2 4 0 1,060 1 11	.....
893 Ijmal	Chancher, pargana Behia.	1,713 9 8	.....	Ijmali share to be sold is 5a. 4p. and other share is excluded from sale.	Dhankumar Chand, Basanta Kuar and others.	571 2 11	.....	74 3 2
1211 Ijmal	Suhia, pargana Behia .	4,263 13 10	.....	Ijmali share to be sold is in Suhia 2a. 8p. Bharauli 5a. 4p. Other shares are excluded from sale.	Nund Lal, Ram Narain Singh and others.	644 15 3	.....	97 10 11
1269	Baruha, pargana Bhojpur.	870 10 8	Whole ..	.....	Jadunundan Singh, Raghunundan Singh and others.	.....	3 8 6	.....
1798	Kusurpa, pargana Chausa.	839 11 0	Do. ...	.....	Bhugwat Sahai, Mussammat Dulahin, Rama Kuar, wife of Raja Ram, Rasbehari Lal and others proprietors of 16 annas.	.....	† L. R. 145 14 4 T. M. 6 0 0 151 14 4	.....
2153	Barahuli, pargana Chainpur.	511 9 2	Do. .	.....	Ram Saroop Singh, Chandan Singh and others.	.....	92 1 2	.....
2198	Bairi Raghunathpur, pargana Chainpur.	589 4 6	Do. ..	.....	Sooraj Narain Singh, self and guardian of Adit Prashad Singh.	.....	184 6 10	.....
2908	Umanpore, pargana Chainpur.	5,942 6 4	.....	Ijmali share to be sold is in village— As. P. Patilahang ... ... 13 9 Umanpore ... ... 1 3 Sahijna ... ... 4 3 Chandrauli ... ... 13 6 Sarison ... ... 8 0 Sotwahi-Apoor... ... 12 0 Semeria ... ... 8 0 Choukhanda ... ... 16 0 Chak Bhagwat ... 8 0 Hurkutya ... ... 8 0 Abidaura ... ... 16 0 Kutumanpore ... ... 16 0 Dhora Patisarwa .. 8 0 Sarla Balbhadarpore 4 3 Kasthar ... . 16 0 Kishunpura ... 11 0 Other shares are excluded from sale.	Ramdani Rai, Dudh Nath Rai and others.	2,111 12 1	.....	319 1 10
3000 5 and 7	Ruppur, pargana Chainpur.	14,486 15 9	.....	The share of separate account to be sold is khata 3 in village Ora 5a. and khata 7, 8a. in village Ora.	Jageshar Singh and others	254 13 10	.....	109 3 4
				Other shares are excluded from sale with the exception of khata 1 which will also be sold.	Adhat Singh	255 0 0	.....	.....
3074 Ijmal	Sondhi, pargana Chainpur.	1,636 4 3	. .	Ijmali share to be sold is in village— As. Majhgaon ... ... 16 Baruna .. .. 8 Jignasamin ... ... 8 Madanpura .. ... 8 Sondhi Raste Khandha 8 Mirgu Rampur ... ... 8 Kharigawan ... ... 8 Rajiabandh ... ... 8 Share in mahula ... .. 8 Other shares are excluded from sale.	Kishunanund Sham Behari Lal *alias* Gogulall and others.	527 15 7	.....	265 5 5
6 96	Pandeypatti, pargana Bhojpur.	620 3 0	Whole ..	. . .	Sital Pershad, Kamlapat and others.	.....	106 5 9	.....

* These are the arrears due from khata 1 at March kist, and the sale is held under section XIV, Act XI of 1859.
† These are the arrears due from Ijmali share for March kist, and the sale is held under section XIV, Act XI of 1859.

Arrah, the 24th July 1902.

H COUPLAND, Collector.

APPENDIX XXX.

Advertisement of Sale.

NOTICE is hereby given that the undermentioned plots of land no longer required by Government, situated along the main line of the East Coast (now Bengal-Nagpur) Railway, in the district of Puri, will be put up to sale at 12 o'clock on 8th day of August 1902, corresponding with the 24th Sraban 1909 Fasli at the Puri station.

The purchasers of the several plots of land will be subject to the following conditions:—

1st.—The purchasers will have no power to make any excavations on the land nearer than 15 feet from the railway fencing, or plough the land closer than three feet from its foundation.

2nd.—If the amount of purchase-money does not exceed Rs. 100, the whole amount must be paid down at once.

3rd.—If the amount of purchase-money exceed Rs. 100, one-fourth of the amount must be immediately deposited. If the balance be not paid by noon of the fifteenth day after the sale, reckoning the day of sale as one, or if that day be a close holiday, then by noon of the first succeeding office day, the sale shall be cancelled, the sum deposited being forfeited to Government, and the lot again put up for sale at the risk of the defaulting purchaser after issue of advertisement as in the case of original sale.

4th.—The plots of land will be sold revenue-free to the highest bidders.

5th.—The purchasers shall be put in possession on receipt by the District Collector of the orders of the Board confirming the sale.

Consecutive lot number.	Name of district.	Pargana and mauza.	Number of mile on which land is situate.	Situated on which side of the Railway.	Approximate area of lot in bighas and acres.		Land excluded from sale from each lot.		Commencement and termination of lot.	Boundary of lot.
					B. K. G.	A. R. P.	Reasons for exclusion.	A. R. P.		
1	2	3	4	5	6		7		8	9
										Lot No. 1.
1	Puri ..	Mauza Nayagur, zilla Rameswar, kila Khurda, district Puri.	459	West of the Railway line.	.....	2 0 10	... .	.....	Lots Nos. 1 and 2.	*North.*—Markand Patra's garden and Government waste land. *South.*—Mulikhan's garden. *East.*—Cultivated land of Pandab Srichandan and Bhaskar Khan. *West.*—Cultivated land of Izir Khan, Shaik Fakir, and Pandab Srichandan.
										Lot No. 2.
2	Do. ...	Mauza Taladihi, zilla Kuhuri, kila Khurda, district Puri.	449	East of the Railway line.	.....	2 0 10	.....	. .	. ..	*North.*—Chanda Santra's land. *South.*—Road. *East.*—Road. *West.*—Chanda Santra's land.

Puri, the 16th June 1902.

A. GARRETT, Collector.

Notification A.

NOTICE is hereby given, under sections 6 and 13, Act XI of 1859, that the undermentioned estates and shares of estates in the district of Backergunge will be put up for sale at the office of the Collector of that district on the 26 h September 1902 at 12 o'clock for arrears of revenue and other demands which by law are realisable as arrears of land revenue.

When in columns 5, 7 and 9 of the appended statement it is stated that only a share is to be sold, it is to be understood that a separate account is kept for that share.

Tauzi No.	Name of mahal and pargana.	Sadar jama of the whole estate.	Whether the whole estate is to be sold.	If only a share is to be sold, specification of such share or shares.	Name of proprietors of property to be sold.	If only a share is to be sold, the sadar jama of such share.	If the whole estate is to be sold, the arrears due from it.	If only a share is to be sold, the arrears due from it.
1	2	3	4	5	6	7	8	9
		Rs. A. P.				Rs. A. P.	Rs. A. P	Rs. A. P.
1994	Taluq Biswa Nath Sen, of pargana Khanya Bahadurnagar.	570 6 11½	Whole estate.	... ..	Ram Narain Sen and others.	.....	142 6 9	... .
2749	Taluq Durga Gangeswar of pargana Uttar Shahabazpur.	1,037 11 3½	.....	Separate account No. 1 for 8 annas' share.	Guru Prosanna Roy and others.	518 13 8	.....	54 6 5
4534	Char Sarikol of pargana Jazira.	3,441 11 3	Whole estate.	.....	Mr. G. L. Garth and Mr. H. L. Weatheral, trustees to the estate of Tojambal Ali Choudhury and others.	.....	2,841 11 3	.....
4198	Char Jahapur of pargana Jazira.	5,000 0 0	Ditto ...	.....	Ditto ...	.....	300 0 0	.....
5235	Gar Makarari, howla No. 1, of Char Tabgi of pargana Dakshin Shahabazpur.	3,077 0 0	Whole howla.	.....	Basanta Kumar Guha ..	.....	460 0 0	... ..

Backergunge Collectorate, the 31st July 1902.

D. WESTON, Collector.

Notification A.

NOTICE is hereby given, under sections 6 and 13, Act XI of 1859, that the undermentioned estates and shares of estates in the district of Bogra will be put up for sale at the office of the Collector of that district on the 22nd September 1902 at noon for arrears of revenue and other demands which by law are realisable as arrears of land revenue.

When in columns 5, 7 and 9 of the appended statement it is stated that only a share is to be sold, it is to be understood that a separate account is kept for that share.

Tauzi No.	Name of mahal and pargana.	Sadar jama of the whole estate.	Whether the whole estate is to be sold.	If only a share is to be sold, specification of such share or shares.	Names of proprietors of property to be sold.	If only a share is to be sold, the sadar jama of such share.	If the whole estate is to be sold, the arrears due from it.	If only a share is to be sold, the arrears due from it.
1	2	3	4	5	6	7	8	9
12	Taraf Bihar, pargana Selbarsa.	Rs. A. P. 4,773 9 8½	..	The ijmali or residue share, excluding the shares for which separate accounts have been opened, will be sold.	Mahamad Elahadad Khanpani and others.	Rs. A. P. 3,303 5 1½	Rs. A. P.	Rs. A. P. 97 6 5½

Bogra Collectorate, the 28th July 1902.

R. KRISHNA, Collector.

Notification A.

NOTICE is hereby given, under sections 6 and 13, Act XI of 1859, that the undermentioned estates and shares of estates in the district of Chittagong will be put up for sale at the office of the Collector of that district on the 8th September 1902 at 12 A.M. for arrears of revenue and other demands which by law are realizable as arrears of land revenue.

When in columns 5, 7 and 9 of the appended statement it is stated that only a share is to be sold, it is to be understood that a separate account is kept for that share.

Tauzi No.	Name of mahal and pargana.	Sadar jama of whole estate.	Whether the whole estate is to be sold.	If only a share is to be sold, specification of such share or shares.	Names of proprietors of property to be sold.	If only a share is to be sold, the sadar jama of such share.	If the whole estate is to be sold, the arrears due from it.	If only a share is to be sold, the arrears due from it.
1	2	3	4	5	6	7	8	9
4098 4119 3113	Thana Chakaria, taraf Sher Masia Khan Chowdhury.	Rs. A. P. 527 6 6	The whole estate will be sold.	..	Badiajjama, Abdul Majid and others.	Rs. A. P. .	Rs. A. P. 60 4 °5	Rs. A. P. .....

The amount shown in column 8 represents the arrears due for kist ending 25th February 1902.

Chittagong Collectorate, the 28th July 1902.

E. GEAKE, Collector.

Notice of Sale for Arrears of Revenue.

NOTICE is hereby given, under section 6, Act XI of 1859, read with Act VIII (B.C.) of 1868 and Act II (B.C.) of 1871, that the undermentioned Noabad taluk in the district of Chittagong will be put up to public and unreserved sale at the Collector's office of that district on 2nd September 1902 at 12 noon for arrears of rents and cesses remaining unpaid on the 25th May 1902:—

No. of tenure.	Name of mauza, thana and mahal.	Name of proprietor.	SADAR JAMA.		AMOUNT OF ARREARS FOR WHICH THE TENURE IS TO BE SOLD.		
			Rent.	Cess.	Rent.	Cess.	Total.
1	2	3	4	5	6	7	8
99 122	Mahal Noabad, mauza Khurulia, thana Kamu, taluk Baksha Ali.	General Manager, Court of Wards, on behalf of the estate of Mahabat Ali Chowdhury.	Rs. A. 638 9	Rs. A. P. 92 8 6	Rs. A. 2,554 4	Rs. A. 370 2	Rs. A. 2,924 6

Chittagong, the 2nd August 1902.

A. H. VERNEDE, *for* Collector.

In the Court of Rai Nundo Lal Dey Bahadur, Officiating Subordinate Judge, 1st Court, Saran, at Chapra.

EXECUTION CASE No. 59 OF 1902.

Babu Raja Ram and another, of Patna, decree-holders, *versus* Babu Shyam Shivendra Sahi *alias* Lal Saheb, of Manjha (Saran), judgment-debtor.

THE right, title and interest of the judgment-debtor in the following properties will be sold at auction by the Nazir of the District Judge's Court, Saran, in the Court-house premises at 12 o'clock on the 1st day of September 1902 for the realisation of the judgment-debt, Rs. 2,43,841-3 :—

Serial No.	No. tauzi mahal.	Name of mahal and pargana.	Name of mauza (mortgaged), asli main dakhili, including tolas appertaining thereto.	Extent of share pokhta.	Jama sadar mahal as entered in the deed and decree.	Thana.	Sub-Registry Office.	Jama kham of mauza as entered in judgment-debtor's schedule ama-niwar.	Minhai kharcha.				Net profit of mauza.	Sairat according to judgment-debtor's schedule.	Approximate value.	Remarks.
									Malguzari mauzawar.	Cesses of mauza.	Kharcha debi at 10 per cent. on jama kham.	Total expenses of all sorts.				
1	2	3	4	5	6	7	8	9	10	11	12	13	14	15	16	17
				As. P.	Rs. A. P.			Rs. A. P.	Rs. A. P.	Rs. A. P.	Rs. A.	Rs. A. P.	Rs. A. P.	Rs. A. P.	Rs.	
1	3550	Barahpur, pargana Manjhi.	Barahpur, pargana Manjhi, asli main dakhili, including tolas appertaining thereto	8 0	3,126 10 9	Chapra ..	Chapra ...	3,426 8 3½	1,513 5 9½	103 3 0	342 0	1,958 8 9½	1,567 15 6½	153 14 1	21,968	
2	3551 3511 in decree.	Chakbade, pargana Manjhi.	Chakbade, pargana Manjhi, and ditto.	8 0	121 5 9	Do.	Do.	720 14 6	60 10 11	47 15 0	72 0	180 9 11	540 4 7	64 4 5½	7,560	No incumbrance. The proprietory right of the judgment-debtor will be sold.
3	3644	Saidpur, pargana Manjhi.	Gurdahan Khurd, pargana Manjhi, ditto.	8 0	184 10 1	Do.	Do.	383 14 6	69 4 0	33 1 6	38 0	140 5 6	243 9 0	40 12 8½	3,500	
4	3573	Godna, pargana Manjhi.	Godna, pargana Manjhi, ditto.	3 2 According to butwara 8 as.	911 5 8	Do.	Do.	709 2 7½	454 10 6½	8 14 0	70 6	533 8 6½	166 10 1	249 3 5½	2,318	
5	3632	Raipur, pargana Manjhi.	Raipur, pargana Manjhi, ditto.	8 0	42 4 3	Do. ...	Do.	291 0 1½	21 2 1½	0 7 0	29 9	50 9 1½	240 7 0	9 15 3	3,400	
6	2170	Neyamatpur Bhatawli, pargana Dangsi.	Bhatawli *alias* Bhatwalia, ditto.	8 0	2,000 0 0	Gopalganj ..	Gopalganj ...	112 8 7½	25 11 0	11 8 0	11 8	48 11 0	63 13 7½	... ..	850	
7	2170	Ditto	Niyamatpur *alias* Khajuria, ditto.	8 0	2,000 0 0	Ditto ...	Ditto ..	2,314 14 3	507 4 0	100 0 0	222 0	919 4 0	1,295 10 3	32 5 6	18,225	
8	2170	Ditto ..	Bashi *alias* Bagheji, ditto.	8 0	2,000 0 0	Ditto ...	Ditto ...	1,031 14 9	239 0 0	95 0 0	103 0	437 0 0	594 14 9	17 2 0	8,500	
9	2170	Ditto ..	Bahuara *alias* Hanuar, ditto.	8 0	2,000 0 0	Ditto ...	Ditto ...	856 11 1½	195 12 0	74 0 0	86 0	355 12 0	500 15 1½	49 13 7½	7,035	Ditto. There being no mauzawar jama sadar and cesses of this mahal, it has been fixed in jama kham.
10	2170	Ditto ...	Mohamadpur Harl, pargana Dangsi, ditto.	8 0	2,000 0 0	Ditto	Ditto ...	157 2 10½	32 5 0	13 0 0	15 0	60 5 0	96 13 10½	...	1,380	
11	3596	Gurdahan Kallan, pargana Manjhi.	Gurdahan Khurd, pargana Manjhi, ditto.	8 0	406 12 9	Ekma outpost ...	Ekma ...	295 13 10½	70 4 0	23 14 0	30 0	124 2 0	171 11 10½	17 5 0	2,460	
12	3598	Ditto ...	Saha *alias* Sahabalpur, ditto.	8 0	406 12 9	Ditto ...	Do ...	213 12 9	52 2 0	15 5 0	21 0	88 7 0	125 5 9	25 6 11½	1,700	
13	3586	Ditto ..	Bishenpura *alias* Nandpur, ditto.	8 0	406 12 9	Ditto ...	Do. ...	138 10 10½	28 0 0	8 9 0	14 0	50 9 0	88 1 10½	30 6 4	1,195	
14	3586	Ditto ...	Saidpura, pargana Manjhi, ditto.	8 0	406 12 9	Manjhi	Do.	40 1 0	10 0 0	2 12 0	4 0	16 12 0	23 5 0	12 5 3	330	
15	3586	Ditto ...	Bhidia Khurd *alias* Bhadpa, ditto.	8 0	406 12 9	Do. ...	Do. ...	163 8 0	43 0 5	12 0 0	16 0	71 0 5	92 7 7	3 14 8	1,200	
16	2165	Mohamodpur, pargana Dangsi.	Mohamadpur, pargana Dangsi, ditto.	8 0	360 7 1½	Gopalganj ...	Gopalganj .	939 9 10½	115 4 0	68 4 6	94 0	267 8 6	672 1 4½	84 2 4½	9,400	Ditto.
17	3577	Dhelhari, pargana Manjhi.	Dhelhari, pargana Manjhi, ditto.	8 0	468 4 3½	Ekma outpost ...	Ekma .	489 2 3	234 2 2	30 13 3	49 0	313 15 5	175 2 10	27 12 11½	2,400	
18	549	Jalalpur, pargana Bal.	Kamalpur, pargana Bal, ditto.	8 0	16,415 6 9	Chapra	Chapra ...	1,235 14 10½	213 5 4	79 0 0	123 0	415 5 4	820 9 6½	23 5 0	9,600	
19	549	Ditto ..	Padrowna, pargana Bal, ditto.	8 0	16,415 6 9	Do.	Do. .	1,968 10 5	600 0 0	125 0 0	200 0	925 0 0	1,043 10 5	... ..	15,000	
20	549	Ditto ..	Pharusi, pargana Bal, ditto.	8 0	16,415 6 9	Do.	Do. ...	1,417 0 8	303 5 4	90 0 0	140 0	533 5 4	883 11 4	.....	9,800	
21	549	Ditto ...	Mobarakpur, pargana Bal, ditto.	8 0	16,415 6 9	Do.	Do. ...	549 13 1½	240 0 0	59 0 0	85 0	384 0 0	465 13 1½	26 14 7½	6,600	Ditto. Cesses of this mahal being not mauzawar, it has been fixed on jama kham. Judgment-debtor's proprietory right will be sold.
22	548	Ditto ...	Sadhpur, pargana Bal, ditto.	8 0	16,415 6 9	Do.	Do. ...	659 8 6	173 5 4	62 1 0	65 0	295 5 4	364 3 2	16 3 6	5,100	
23	549	Ditto ...	Kazipur *alias* Kadipur, ditto.	8 0	16,415 6 9	Do.	Do. .	1,144 12 6	394 10 8	76 0 0	115 0	585 10 8	559 1 10	422 12 2	8,500	
24	549	Ditto ...	Banwalia, pargana Bal, ditto.	8 0	16,415 6 9	Do. ..	Do.	796 13 0	304 0 0	55 0 0	80 0	439 0 0	357 13 0	21 11 0	6,000	
25	549	Ditto ...	Modutputty, *alias* Mominpatty, ditto.	8 0	16,415 6 9	Do.	Do. ...	961 2 10½	267 3 3	65 12 0	94 0	426 15 3	534 3 7½	. ....	7,700	
26	540	Ditto ...	Taka Firoz Fateh, ditto	8 0	16,415 6 9	Do.	Do. ...	1,194 2 0	346 10 8	83 0 0	129 0	549 10 8	644 7 4	917 14 0	8,380	

Office of Subordinate Judge, 1st Court, Saran, Chapra, the 30th July 1902. (489—1) NUNDO LAL DEY, Officiating Subordinate Judge, 1st Court, Saran.

Statement of Government Promissory Notes enfaced for payment of Interest in London, under deduction of amount retransferred to India, and outstanding in the books of the Bank of Bengal on the 31st July 1902.

PARTICULARS.	3 per cent. of 1896-97.	3½ PER CENT. LOANS—							4 PER CENT. LOANS—							4½ PER CENT. LOANS—				GRAND TOTAL.
		Of 1842-43.	Of 1854-55.	Of 1865.	Of 1879.	Of 1893-94.	Of 1900-1901.	Total.	Of 1832-33.	Of 1835-36.	Of 1842-43.	Of 1854-55.	Transfer of 1865.	Reduced 4 per cent. loan of 1879.	Total.	Of 1870.		Transfer loan of 1879, 4½ per cent. portion.	Total.	
Balance of 15th July 1902	1,58,08,500	2,22,57,200	11,70,76,700	3,01,83,700	1,30,25,000	100	10,50,300	18,35,93,000	6,934	5,000	.....	15,500	40,800	5,700	73,934	5,000	...	29,500	34,500	19,95,09,934
ADD—																				
Amount enfaced at Madras up to 20th July 1902 ...	.....	.....	500	.....	.....	.....	.....	500	.....	.....	.....	.....	.....	.....	.....	.....	...	.....	.....	500
Amount enfaced at Bombay up to 25th July 1902	16,500	22,000	35,500	30,000	.....	.....	1,000	88,500	.....	.....	.....	.....	.....	.....	.....	.....	...	.....	.....	1,05,000
Amount enfaced at Calcutta between 16th and 31st July 1902	...	29,050	1,01,000	6,500	.....	.....	13,00,000	14,36,500	.....	.....	.....	.....	.....	.....	.....	.....	...	.....	.....	14,36,500
	1,58,25,000	2,23,08,200	11,72,13,700	3,02,20,200	1,30,25,000	100	23,51,300	18,51,18,500	6,934	5,000	.....	15,500	40,800	5,700	73,934	5,000	...	29,500	34,500	20,10,51,934
DEDUCT—																				
Amount written off in the London registers ...	25,000	15,300	3,45,000	35,700	.....	.....	.....	3,96,000	.....	.....	.....	.....	.....	.....	.....	.....	...	.....	.....	4,21,000
Balance on 31st July 1902	1,58,00,000	2,22,92,900	11,68,68,700	3,01,84,500	1,30,25,000	100	23,51,300	18,47,22,500	6,934	5,000	.....	15,500	40,800	5,700	73,934	5,000	...	29,500	34,500	20,06,30,934

NOTE.—From 9th June 1867 to 31st May 1902—Enfaced from India 11,108 lakhs; retransferred from London 10,435 lakhs.
" 1st June 1902 " 15th June " " " " " " " " 7 "
" 16th " " " 30th " " " " " 3 lakhs " " " 23 "
" 1st July " " 15th July " " " " 4 " " " " 11 "
" 16th " " " 31st " " " " " 15 " " " " 4 "

11,130 lakhs 10,480 "
10,480 "

Balance against India 650 "

E. HILDRETH,
Superintendent.

W. D. CRUICKSHANK,
Secretary and Treasurer.

(495—1)

PUBLIC DEBT OFFICE, BANK OF BENGAL,

Calcutta, the 2nd August 1902.

Statement of the Affairs of the Bank of Bengal for the week ending 29th July 1902.

LIABILITIES.

	Rs.	A.	P.
Capital paid up	2,00,00,000	0	0
Reserve Fund	1,14,00,000	0	0
Public Deposits at Head Office ... .. Rs. 67,15,408 12 0			
Ditto ditto at Branches „ 1,32,95,789 2 7	2,00,11,197	14	7
Other Deposits at Head Office and Branches...	8,37,07,916	2	9
Bank Post Bills, &c.	3,30,062	11	4
Sundries	13,62,589	11	1
Rupees ...	13,68,11,768	7	9

ASSETS.

	Rs.	A.	P.
Government Securities	1,63,08,771	0	0
Other authorised investments	66,54,660	0	0
Loans on Government and other authorised securities	2,86,33,013	12	7
Accounts of Credit on ditto ditto ...	1,46,50,161	1	10
Bills discounted and purchased	1,87,85,847	5	4
Balances with other Banks	12,00,902	6	5
Bullion	...	...	...
Dead Stock	16,04,008	12	7
Stamps	12,932	6	7
Sundries	9,01,042	11	1
	8,87,51,339	8	5
Cash and Currency Notes at Head Office* ... ... Rs. 2,53,57,617 14 5			
Cash and Currency Notes at Branches† „ 2,27,02,811 0 11	4,80,60,428	15	4
Rupees ...	13,68,11,768	7	9

* Includes Sovs. & ½ Sovs., value Rs. 1,28,385 0 0
† Do. do. do. „ 1,60,612 8 0
Rs. 2,88,997 8 0

By order of the Directors,

R. J. BIRON,
Chief Accountant.

W. D. CRUICKSHANK,
Secretary and Treasurer.

Rate for Demand Loans, 3 per cent.
Percentage 45·59.

BANK OF BENGAL,
Calcutta, the 31st July 1902.

MEMORANDUM.

LIABILITIES.

	Rs.	
Government Balance at Head Office	19,21,832	Decrease.
„ Ditto at Branches ...	32,41,410	Increase.
Other Deposits	13,77,376	Do.
Post Bills	21,404	Decrease.

ASSETS.

	Rs.	
Bank's Investments	45,862	Increase.
Loans	4,15,310	Do.
Accounts of Credit	2,70,709	Decrease.
Mercantile Bills	3,13,370	Do.
Cash at Head Office	1,51,533	Do.
Do. at Branches	30,73,929	Increase.

BANK OF BENGAL,
Calcutta, the 29th July 1902.

(487—1)

Notice of Deaths sent to the Administrator-General of Bengal under section 64 of Act II of 1874.

Name of deceased.	Place of death.	Date of death.	By whom death reported, and when.	REMARKS.
Mesha, a Native Christian	Beawar ...	25th Dec. 1901 ...	Commissioner of Ajmere, Merwara, on 14th April 1902.	No Will. No application.
R. W. Ritson	Presidency General Hospital.	12th April 1902 ...	District Judge, 24-Parganas, on 17th May 1902.	Not known whether any Will left. No application.
J. L. Smart, of Berhampur	Ditto ...	7th May „ ...	Ditto ditto ...	Ditto. Ditto.
S. Peters, Clerk, O. and R. Railway, Lucknow.	Lucknow ...	27th April „ ...	District Judge, Lucknow, on 19th May 1902.	No application.
Mr. F. Marks, of 3 Fonwick Bazar.	Presidency General Hospital.	17th May „ ...	District Judge, 24-Parganas, on 21st May 1902.	Effects in charge of the widow of the deceased.
A. E. W. Sharpe, of 3 Warris Bagan.	Ditto ...	18th „ „ ...	District Judge, 24-Parganas, on 23rd May 1902.	Not known whether any Will left. No application.
Mrs. E. Syms, of St. Mary's Home.	Ditto ...	19th „ „ ...	District Judge, 24-Parganas, on 27th May 1902.	Ditto. Ditto.
Mrs. B. Vitriana, of St. Mary's Home.	Ditto ...	23rd „ „ ...	District Judge, 24-Parganas, on 3rd June 1902.	Ditto. Ditto.
Mr. J. Urquhart, of 18-1 Elliot Lane.	Ditto ...	28th „ „ ...	Ditto ditto ...	Ditto. Ditto.
J. E. Truss, Boiler-maker ...	Lahore ...	29th „ „ ...	District Judge, Lahore, on 6th June 1902.	Intestate.

Calcutta, the 4th August 1902.

HENRY T. HYDE, Administrator-General of Bengal.

Pure Sulphate of Quinine.

MANUFACTURED AT THE BENGAL GOVERNMENT CINCHONA PLANTATION.

FROM 1st April 1902 the price of this quinine will be as follows:—

1 Pound tin Rs. 17, or, post free, Rs. 17-8.
½ " " " 8-8 " " " " 8-14.
¼ " " " 4-4 " " " " 4-10.

Analysis shows this quinine to be of the purest manufacture; and it is guaranteed to be free from wilful mixture with the inferior alkaloids, cinchonine and cinchonidine. It is for sale only to Government officers, and only for cash, and may be had from the Superintendent, Botanic Garden, Sibpur, near Calcutta.

Cinchona Febrifuge.

Cinchona Febrifuge can be purchased by all Government officers and by any one taking *six pounds* and upwards at a time from the Superintendent, Botanic Garden, Calcutta, for cash only at the following rates—

	Government officers.	General public.	Postage extra.
	Rs. A.	Rs.	As.
1 Pound tin ...	10 0	12	8
½ " " ...	5 0	6	6
¼ " " ...	2 8	3	4

HARI CHARAN BOSE, M.A., B.L., intends to be enrolled as a Vakil of the High Court, Calcutta.

(376—4—969)

BABU NARENDRA LAL DEY, M.A., B.L., intends to enrol as a Vakil of the High Court, Calcutta.

(431—4—980)

MADHAVA CHANDRA CHATTERJEE, Government Pleader of Dinajpur, intends to be enrolled as a Vakeel of the High Court.

(457—4—997)

Wanted.

AN Estimator is required for the office of the Executive Engineer, Mahanadi Division, Cuttack. He must be a good Draftsman and Tracer. He must also have a certain amount of knowledge of how to work out calculations for the scantlings of roof timbers, size of joists and Ts for terraced roofs, &c., and be able to make finished drawings from pencil sketches and the instruction given. When not employed in drawing or estimating he will be required to perform the duties of an ordinary clerk in an Executive Engineer's office. The man appointed will be on probation for six months. A candidate who has gone through the Sibpur Course preferred. The post is a permanent one. The salary Rs. 60 a month rising by yearly increments of Rs. 4, on approved service, to Rs. 80. Applications, with certified copies of testimonials, or the originals, should be addressed to the Executive Engineer, Mahanadi Division, Cuttack.

Wanted

A SUB-INSPECTOR OF SCHOOLS on a salary of Rs. 50 and travelling allowance up to Rs. 35 a month under the Civil Service Regulations. The post is likely to be permanent. Knowledge of Hindi is indispensable. None but graduates and successful teachers qualified under the rules need apply. Applications with copies of certificates of age, health, moral character, &c., must reach the undersigned by the 9th August 1902.

SARAT CH. SEN GUPTA,
for Chairman, District Board, Palamau.

Palamau District Board's Office, dated Daltonganj, the 22nd July 1902. (443—2)

Wanted

A SUB-OVERSEER for the District Board of Bogra on a salary of Rs. 40 and a horse allowance of Rs. 15 per month. Applications will be received up to 15th August 1902. None need apply who is not qualified under the rules.

R. KRISHNA, Chairman.

Bogra, the 28th July 1902. (438—2)

Notice.

WANTED a District Engineer for the District Board of Bogra on a salary of Rs. 200 a month rising to Rs. 300 by an annual increment of Rs. 20.

2. None need apply who is not qualified under the rules issued in Government Notification No. 3334L.S.-G., dated 20th December 1901.

3. All applications from intending candidates shall be submitted in sealed and registered covers addressed to the Chairman of the Bogra District Board and superscribed "Application for appointment of District Engineer." Each application must be accompanied by all the necessary certificates and testimonials required by the rules issued in the said Resolution, together with a suitable envelope addressed and sufficiently stamped for registration, in which they can be returned in the event of the application being unsuccessful.

4. Applications will be received by the undersigned up to the 10th August 1902.

R. KRISHNA, Chairman.

Bogra, the 19th July 1902. (419—3)

Notice.

WANTED an Assistant Estimator on Rs. 25 a month with neat handwriting with prospect of being made permanent. Applications with copies of testimonials will be received by the undersigned up to 17th August 1902.

BINOY KRISHNA MODUK, B.E.,
for District Engineer, Burdwan.

Burdwan, the 2nd August 1902. (498—2)

Notice.

IN continuation of this Office Notice dated 27th June 1902, published in the *Calcutta Gazette* of the 9th July 1902, Part II, page 871, it is hereby notified for general information, under section 33 of Act IV (B.C.) of 1887, that a charge of Rs. 20 a day will be levied as extra jetty hire on all Charter-party holidays in addition to the usual jetty hire, viz. Rs. 35, charged on ordinary days.

R. S. GREENSHIELDS,
Chairman of the Port Commissioners.

Chittagong, the 22nd July 1902. (444—3)

Notice.

NOTICE is hereby given to all creditors of the late Babu Gopaul Lall Seal, of No. 60 Colootollah Street, in the Town of Calcutta, that I have filed a suit on behalf of Sreemutty Kadumbini Dassee, mother and one of the creditors of the said Gopaul Lall Seal, praying for administration by the High Court of the Estate of the said Gopaul Lall Seal. The suit is No. 486 of 1902, Original Side, High Court. A number of creditors are joined as defendants. Those whose names are not included should communicate with the undersigned with a view to have their names included as defendants or notice being served on them under section 30 of the Civil Procedure Code.

N. C. BOSE, Attorney-at-Law.

3 Hastings Street, the 18th July 1902. (413—2—999)

Notice.

SEALED TENDERS for the conveyance of import, export and other Government stores, and for labour and the hire of boats for two periods—one of 1 year 3 months, from 1st January 1903 to 31st March 1904, and one for 3 years 3 months, from 1st January 1903 to 31st March 1906—will be received by the Agent for Government Consignments, Calcutta, up to noon on Friday, the 3rd October 1902.

Tenders should be superscribed "Tender for carrying contract for one year and three months" and "three years and three months," as the case may be.

Tenders must be prepared on forms to be obtained with full particulars from the undersigned.

No tender will be received except on the prescribed form, and no additions or alterations must be made on the tender form.

Tenders must be supported by a Bank of Bengal or Treasury receipt for Rs. 700 as earnest-money. The earnest-money to be forfeited in the event of a tender withdrawn. No tender will be received without a deposit of this earnest-money.

Tenders will be opened at noon on Friday, October 3rd, 1902, at No. 5 Strand Road, in the presence of tenderers by the undersigned, who does not bind himself to accept the lowest or any tender.

H. J. PATERSON, LIEUT., R.N.R.,
Offg. Agent for Govt. Consignments.

Calcutta, the 25th July 1902.

Public Auction Sale.

THE following goods now lying at the Custom House will be sold by public auction after one month from date under the provisions of section 88 of the Sea Customs Act if they are not cleared within that period:—

1 Package cycle, parts marked PM3148, *ex* S.S. *Jelunga*, entered inwards on 22nd February 1901.

3 Cases merchandise, marked L. Fildstein, *ex* S.S. *Arratoon Apcar*, entered inwards on 2nd October 1901.

1 Package merchandise, marked Rockit & Co., *ex* S.S. *Pandua*, entered inwards on 31st December 1901.

L. F. MORSHEAD, Offg. Collector of Customs.

Custom House, Calcutta, the 26th July 1902.

Notification of Sale.

ESTATE NISTARINI DASSEE.

Peary Lall Maitra *versus* Gopal Chunder Chatterjee.

TO be sold by the Official Receiver of the High Court as Receiver of the estate of Nistarini Dassee, deceased, at the hour of 1 o'clock at noon, on Tuesday, the 12th day of August next, at his office on the third floor of the High Court building, pursuant to an order of the said High Court made in this suit and dated the 27th day of August, the undermentioned landed properties:—

Re *premises No. 28 Durga Charun Mitter's Street.*

All that three-storied brick-built messuage, tenement or dwelling-house, land, hereditaments, and premises, together with the piece and parcel of land whereon the same is erected and built, containing by estimation 14 chitaks, more or less, situate, lying, being at and numbered 28 Durga Charun Mitter's Street, in the town of Calcutta, and butted and bounded on the north by Durga Charun Mitter's Street, on the east by a common pathway, on the south by 28-1 Durga Charun Mitter's Street (property of Beni Madhub Baisack), and on the west by 27 Durga Charun Mitter's Street (the house of Nemai Chund Dutt and Brothers) howsoever, otherwise the same is or at any time heretofore was butted, bounded known or described.

Re *premises No. 25 Brindabun Bysack's Street.*

All that two-storied brick-built messuage, tenement dwelling-house, hereditaments and premises, together with the land whereon the same is erected and built, containing by estimation 1 cottah 1 chitak and 2 kanchas, more or less, situate, lying and being at and numbered 25 Brindabun Bysack's Street, Sootanoty, in the northern division of the town of Calcutta, and butted and bounded on the north by the privy and compound wall, municipal drain, filled-up lane, on the south by Brindabun Bysack's Street, on the east by the premises No. 24 Brindabun Bysack's Street, dwelling-house of Gopal Chunder Dass, and on the west by No. 26, Brindabun Bysack's Street, the dwelling-house of Panchanun Bhur or howsoever, otherwise the said house, land, hereditaments, and premises or any part thereof now are or is or heretofore were or was situated, bounded, called, known, numbered, described or distinguished.

Re *premises No. 9 Ahiretolla Street.*

All that three-storied brick-built messuage, tenement, dwelling-house, hereditaments, and premises, together with the rent-free land whereon the same is erected and built, containing by estimation 1 cottah, more or less, situate, lying, and being at and numbered 9 Ahiretollah Street, Sootanooty, in the northern division of the town of Calcutta, and butted and bounded on the north by Ahiretolla Street, on the south by No. 7 bustee in Durmahatta Street, a municipal drain and the raiyati land of Babu Dutt, on the east formerly by the land of Juggo Mohun Mookerjee and now by a filled-up drain, and on the west formerly by No. 8 Durmahatta Street, the land of Gocool Chandra Dutt, and now by the tenanted house belonging to Chandra Mullick or howsoever, otherwise the said house, land, hereditaments and premises or any part thereof now are or is or heretofore were or was situated, bounded, called, known, numbered, described or distinguished.

Re *premises Nos. 4 and 4-1 Dhania Bagan Road.*

All that two-storied brick-built messuage, tenement or dwelling-house, land, hereditaments and premises, together with the land appertaining thereto and containing by estimation 1 cottah 11 chitaks, more or less, which is bounded on the north by No. 6 Dhania Bagan or Nikaseepara Lane, the dwelling house and land of Raj Chandra Dass Boiragee, on the east by Nikaseepara, Lane, a municipal lane, on the west by the dwelling-house of Moti Bibee Nikaree, and on the south partly by Nikaseepara Lane, a public lane, and partly by the passage leading to the said house and that of Moti Bibee Nikaree, and which said premises form part of the piece or parcel of land contained in tauzi No. 298, division No. 2, subdivision No. 12, in mauza Goureebara, in Nikaseepara, at Shambazar, in thana Ultadighee, sub-registration district of Sealdah, and holding No. 97—44, and premises Nos. 4 and 4-1 Dhania Bagan Road, in the district of the 24-Parganas.

The conditions of sale can be seen at the office of the said Receiver and also at the office of Babu Navadwip Chandra Roy any time before the sale and will be produced at the sale.

C. E. GREY, Offg. Official Receiver, High Court.

High Court, Receiver's Office, the 8th July 1902.

(369—4)

Burrakur Coal Co., Ld. (Old Co.)

IN LIQUIDATION.

NOTICE is hereby given, in pursuance of section 186 of the Indian Companies Act, 1882, that a General Meeting of the Members of the abovenamed Company will be held at 25 Mangoe Lane, Calcutta, on Friday, the 12th September 1902, at 1 o'clock P.M., for the purpose of having an account laid before them showing the manner in which the winding up has been conducted and the property of the Company disposed of and of hearing any explanation that may be given by the Liquidators.

A. S. LOVELOCK,
J. H. LEWES, } Liquidators.

Dated 25 Mangoe Lane, Calcutta, the 5th August 1902.

(490—1—1004)

NOTICE.

In Intestate Case No. 46 of 1902.

DISTRICT JUDGE'S COURT, PURNEA.

WHEREAS Bholanath Mukhopadhya, who carried on *aratdari* business at Forbesganj, thana Matiari, district Purnea, died there on the 15th of June 1902, and has left property which is in the custody of the Police; it is hereby notified for general information that any claims to the said property should be made to this Court on or before the 29th August 1902.

F. S. HAMILTON, District Judge.

Purnea, the 2nd August 1902. (500—1)

Notification.

TO be peremptorily sold by the Registrar of the Calcutta High Court, Original Side, in his sale-room in the Court-house on Saturday, the 30th day of August 1902, at 12 o'clock noon, pursuant to a decree and an order of the said Court made in suit No. 850 of 1899 (wherein Amulya Chunder Ghose is the plaintiff and Anukul Chunder Dass and others are the defendants), and dated, respectively, the 15th day of March 1901 and the 16th day of May 1902, the following property belonging to the defendants:—

Lot I.—All that two-storied brick-built dwelling-house with land thereunto belonging and on part whereof the same is erected and built, containing by estimation three cottahs thirteen chitaks and thirteen square feet, more or less, being Holding No. 551 in Block No. XIV in the Northern Division of the Town of Calcutta, and formerly numbered 11 and now numbered 12 Gooruprosad Chowdhry's Lane, in the Town of Calcutta, and bounded as follows:—On the north by the dwelling-house of Mudusudan Gupto, on the south by the dwelling house of Nibaran Chunder Mukerjee, on the east by the dwelling-house of Nibaran Chunder Mukerjee and the tenanted house and land of Bangsadhar Joogi, and on the west by Gooruprosad Chowdhry's Lane.

The conditions of sale and abstract of title may be seen at the office of Babu Kalidas Bhunjo at No. 4 Strand and at the office of the Registrar, High Court, Original Jurisdiction, on any day before the sale and will be produced at the sale.

W. R. FINK, Registrar.

Kalidas Bhunjo, Plaintiff's Attorney.

Calcutta High Court, Original Jurisdiction, the 15th July 1902. (496—1—1003)

Notification

TO be peremptorily sold by the Registrar of the High Court of Judicature at Fort William in Bengal in its Ordinary Original Civil Jurisdiction in his sale-room in the Court-house on Saturday, the 23rd day of August 1902, at the hour of 12 o'clock noon, pursuant to a decree and order of the said Court made in suit No. 174 of 1900 (wherein Gopinath Aurora and others are the plaintiffs and Roshan Lall Khettry and another are the defendants), and dated, respectively, the 6th day of March 1901 and 6th day of June 1902, the following property:—

Nos. 96 and 97 Lower Chitpur Road, a partly two-storied and partly three-storied brick-built dwelling-house with land thereunto belonging, containing by estimation 5 cottahs and 12 chitaks be the same a little more or less, being Holding Nos. 292 and 320 in Block No. XI in the Northern Division of the town of, Calcutta, and bounded on the north by Harrison Road, on the east by Lower Chitpur Road, on the south by No. 98, Lower Chitpur Road, and on the west by a narrow lane running between the above property and the land of Babu Ashutosh Dhur and in respect whereof an annual revenue of Re. 1-1-4 is payable to the Collector of Calcutta.

The abstract of title and conditions of sale may be seen at the Registrar's office in the High Court and also at the office of Messrs. Wilson, Chatterjee, and Mitra, at No. 7 Old Post Office Street, on any day before the sale and will be produced at the sale.

W. R. FINK, Registrar.

Wilson, Chatterjee, and Mitra, Plaintiffs' Attorneys.

High Court, Original Side, the 17th July 1902. (414—1—984)

Notification of Sale.

TO be peremptorily sold by the Registrar of the High Court of Judicature at Fort William in Bengal in its Ordinary Original Civil Jurisdiction in his sale-room in the Court-house on Saturday, the 16th day of August 1902, at the hour of 12 o'clock noon, pursuant to a decree and orders of the said Court made in suit No. 696 of 1898 (wherein Noresh Chunder Mookerjee is plaintiff and Radhica Churn Banerjee is defendant), and dated, respectively, the 22nd day of December 1898 and 11th day of December 1899 and the 9th day of January 1902, the undivided moiety belonging to the defendant Radhica Churn Banerjee in undermentioned property:—

Lot No. 1—All that piece or parcel of land containing by estimation one bigah fifteen cottahs and six chitaks, be the same a little more or less, forming part of No. 134 Janbazar Street, the said No. 134 being Holding No. 62, Block No. XVII in the Southern Division of the town of Calcutta, the revenue payable to Government in respect of the entire holding being Rs 24-11, and butted and bounded as to the said piece or parcel of one bigha fifteen cottahs and six chitaks in the manner following, that is to say, on the north partly by a Municipal drain and partly by the tenanted land of Munshi Mansar Ali, on the east by the tenanted land No. 133 Janbazar Street, belonging to the Kundus of Mouri, on the south by a bustee road leading to Grant Street and dividing this lot from the remaining portion of the said premises No. 134 Janbazar Street allotted on partition to Sreemutty Jagat Mohini Devi and others, and on the west by Grant Street.

The abstract of title and conditions of sale may be seen at the office of the Registrar, High Court, Original Side, and also at the office of Babu Mani Lal Sen, at No. 5 Old Post Office Street, on any day before the sale and will be produced at the sale.

W. R. FINK, Registrar.

Mani Lal Sen, Plaintiff's Attorney.

Calcutta High Court, Original Side, the 12th April 1902. (478—1—998)

Currency Notes.

THE following Currency Note of the Calcutta Circle is stated to have been destroyed, and payment of its value has been claimed by the person whose name is placed against the number. Any other person claiming a right to it is warned to communicate at once with the undersigned:—

Note wholly destroyed.

Register No.	No. of Note.	Value. Rs		Name of claimant.
H678 of 1901-1902	LA 25 61243	50		Abinash Chandra Poddar, care of Brojo Nath De, 25, Bonomali Sarkar's Street, Kumartuli, Calcutta.

F. C. BREWIN, Assistant Comptroller-General, in charge, Paper Currency.

Paper Currency Department, the 5th August 1902.

Lost

THE Government Promissory Notes— Rs.

No. 096820,	3½ per cent. loan	of 1865 ...	500
,, 096821,	ditto	of 1865 ...	500
,, 096817,	ditto	of 1865 ...	500
,, 096531,	ditto	of 1865 ...	100

originally standing in the name of the Bank of Bengal, and last endorsed to Surendra Nath Ganguly, the proprietor, by whom they were never endorsed to any other person. Payment of the above Notes and the interest thereupon have been stopped at the Public Debt Office, Bank of Bengal, and application is to be made for accrued interest and for the issue of duplicates in favour of the proprietor after two years from the date of last advertisement.

Name of the Proprietress—RAJABALA DEBI.

Residence—Janai.

(499—3—1001)

Lost

THE Government Promissory Note No. 136525 of the 3½ per cent. loan of 1865 for Rs. 1,500, originally standing in the name of Ashootosh Mitter, the proprietor, by whom it was never endorsed to any other person.

Payment of the above note and the interest thereupon have been stopped at the Public Debt Office, Bank of Bengal, and application is about to be made for the issue of duplicate in favour of the proprietor.

Name of advertiser—ASHOOTOSH MITTER.

Residence—33 Gurpar Road, Calcutta. (494—3)

Stolen

THE Government Promissory Notes— Rs.

No. 100601,	3½ per cent.	of 1865	...	1,000
„ 100602,	ditto	of „	...	1,000
„ 100603,	ditto	of „	...	1,000
„ 100605,	ditto	of „	...	1,000
„ 100606,	ditto	of „	...	1,000
„ 064315,	ditto	of 1842-43	...	5,000
„ 064316,	ditto	of „	...	5,000
„ 010181,	ditto	of 1879	...	10,000

originally standing in the name of the Bank of Bengal and last endorsed to Gowhar Ali, the proprietor, by whom they were never endorsed to any other person. Payment of the above Notes and the interest thereupon have been stopped at the Public Debt Office, Bank of Bengal, and application is to be made for accrued interest and for the issue of duplicates in favour of the proprietor after two years from the date of last advertisement.

Names of the Proprietors—Laddun Saheba and minors Anwar Ali *alias* Peary Mirza and Yakoob Ali *alias* Chottey Mirza, represented by their mother and certificated guardian, Laddun Saheba, and the minor Badronnessa Bibee, represented by her husband and certificated guardian, Shaik Doman.

Residence—Garden Reach, Paharpoor Road.

(454—3—385)

NOTICE.

In the Court of the Subordinate Judge of Khulna.

RENT EXECUTION CASE No. 38 OF 1902.

Roy Hari Charan Chaudhuri, decree-holder, *versus* Narendra Nath, Surendra Nath Sarkar, and Kamal Basini Dasi, judgment-debtors.

TO be sold by public auction on the 18th August 1902 by the Nazir of this Court the following property of the judgment-debtor Surendra Nath Sarkar for realisation of Rs. 6,696 3:—

The right, title, and interest of the judgment-debtor Surendra Nath Sarkar in 4 annas share of zamindari Bansipur, bearing tauzi No. 875 of the Khulna Collectorate, in thana Kaligunge, the Government revenue being Rs. 718-9 for the share.

CHANDRA NATH GHOSH, Offg. Subordinate Judge

Khulna, the 26th July 1902. (482—1)

In the Court of the Subordinate Judge of Khulna.

MONEY EXECUTION CASE No. 264 OF 1902.

Mukta Kesi Dasi, decree-holder, *versus* Satya Prasad Pal Choudhury and others, judgment-debtors.

THE following property of the judgment-debtor No. 2 will be sold by the Nazir of the Khulna Subordinate Judge's Court at the sale-room at 12 o'clock (noon) of the 18th August 1902 for the realisation of Rs. 5,122-6-3:—

The 1 anna 13 gandas 1 kara and 1 kranti share, which is the property of the judgment-debtor No. 2, Lalit Mohan Pal Choudhury, in pargana Dhuliapur, situate within the jurisdiction of thana Kaligunge, mauza Anantapur and others, bearing No. 77 of the Khulna Collectorate. The revenue of the entire 16 annas estate is Rs. 17,478-15 5 gandas.

CHUNDRA NATH GHOSH,

Offg. Subordinate Judge, Khulna.

Khulna, the 30th July 1902. (491—1)

NOTICE.

In the Court of the Subordinate Judge of Khulna.

RENT EXECUTION CASE No. 45 OF 1902.

Haridas Ray, decree-holder, *versus* Pramatha Nath Pal Chaudhuri and others, judgment-debtors.

TO be sold by public auction on the 18th August 1902 by the Nazir of this Court the following property of the judgment-debtors for realisation of Rs. 10,284-5-6:—

The right, title and interest of the judgment-debtors in zamindari pargana Dhuliapur, 5 annas share, bearing tauzi No. 77-1 of the Khulna Collectorate, in thana Kaligunge, the Government revenue being Rs. 5,530-7-4½ for the share.

CHANDRA NATH GHOSH, Offg. Subordinate Judge.

Khulna, the 26th July 1902. (484—1)

NOTICE.

In the Court of the Subordinate Judge of Khulna.

RENT EXECUTION CASE No. 42 OF 1901.

Satya Bala Devi, decree-holder, *versus* Lalit Mohan Pal Chaudhuri, judgment-debtor.

TO be sold by public auction on the 18th August 1902 by the Nazir of this Court the following property of the judgment-debtor for realisation of Rs. 1,447-2-9:—

The right, title and interest of the judgment-debtor in zamindari pargana Dhuliapur, one-third of 5 annas share bearing tauzi No. 77-1 of the Khulna Collectorate in thana Kaligunge, the Government revenue being Rs. 5,530-7-4½ for the whole share.

CHANDRA NATH GHOSH, Offg Subordinate Judge.

Khulna, the 26th July 1902. (483—1)

NOTICE.

In the 2nd Court of the Subordinate Judge of Midnapore.

TITLE EXECUTION CASE No. 67 OF 1902.

Ramdin Bhuttacharjee, now at Kanelgola, town Midnapore, decree-holder, *versus* Ganga Narayan Maity, of Chaitonpur, pargana Kasizora, judgment-debtor.

TO be sold in the above case by the Nazir of the District Judge's Court, Midnapore, at 12 A.M., on the 15th September 1902, the properties detailed below for realisation of the judgment-debt amounting to Rs. 1,137-15:—

Schedule of the mortgaged properties.

Lot No. 1.—Ten annas and 16 gandas of zamindari right in mahal Gurpurusotompur, *alias* Chaitanpur, including mauza Chaitanpur itself, Dhakhin Abunda, Chandchak and others, bearing tauzi No. 500 of the Midnapore Collectorate and 8 annas 4 gandas share of the patni right of the judgment-debtor in the aforesaid mahal, which is situate in pargana Kasizora, thana Panskura, and within the jurisdiction of the Sub-Registrar of Panskura, district Midnapore. The revenue payable of the mahal is Rs. 498-10-10.

Supposed value Rs. 1,000.

Lot No. 2.—One anna share of mahal Erapur, Siromoni chak, including Radhabon, bearing tauzi No. 472 of Midnapore Collectorate, situate in pargana Kasizora, thana Panskura, and within Panskura Sub-Registrar's jurisdiction. The revenue payable of the mahal is Rs. 7.

Supposed value Rs. 100.

Lot No. 3.—Eight annas share of mahal Almapur, pargana Moyna, bearing tauzi No 629 of Midnapore Collectorate, situate within the jurisdiction of thana Tamluk. The revenue payable of the mahal is Rs. 500-11-7 gandas.

Supposed value Rs. 1,000.

MAHIM CHANDRA GHOSH, Subordinate Judge.

Midnapore, the 31st July 1902. (492—1)

INSOLVENT NOTICES.

In the Court for the Relief of Insolvent Debtors at Calcutta.

In the matter of WOOMA CHARAN GHOSH, BHUGBAT CHUNDER GHOSH, MOHESH CHANDRA GHOSH, and KOYLASH CHUNDER GHOSH, insolvents.

On Tuesday, the 24th day of June last, it was ordered that the matters of the petition of the said insolvents be heard on Tuesday, the 2nd day of September next, and that the said insolvents do then attend to be examined before the said Court.

Kali Mohun Bakshit, Attorney. (458-2)

In the matter of AJADHYA NATH MOOKERJEE, an insolvent.

On Tuesday, the 1st day of July instant, it was ordered that the matters of the petition of the said insolvent be heard on Tuesday, the 2nd day of September next, and that the said insolvent do then attend to be examined before the said Court.

Radhica Nath Ganguly, Attorney. (459—2)

In the matter of SARADA PROSAD BANERJI, an insolvent.

On Tuesday, the 3rd day of June last, it was ordered that the matters of the petition of the said insolvent be heard on Tuesday, the 2nd day of September next, and that the said insolvent do then attend to be examined before the said Court.

P. N. Sen, Attorney. (460—2)

In the matter of LEO HAHN, an insolvent.

On Monday, the 23rd day of June last, it was ordered that the matters of the petition of the said insolvent be heard on Tuesday, the 25th day of November next, and that the said insolvent do then attend to be examined before the said Court.

Dignam & Co., Attorneys. (461—2)

In the matter of JOGENDRA NATH ROY, an insolvent.

On Wednesday, the 25th day of June last, it was ordered that the matters of the petition of the said insolvent be heard on Tuesday, the 2nd day of September next, and that the said insolvent do then attend to be examined before the said Court.

Rakhal Chunder Hazra, Attorney. (462—2)

In the matter of BRINDABUN CHUNDER BHUR, an insolvent.

On Friday, the 20th day of June last, it was ordered that this matter be heard on Tuesday, the 2nd day of September next, and that the said insolvent do then attend to be examined before the said Court.

N. C. Roy, Attorney. (463—2)

In the matter of SRI LALL BAGLA, an insolvent.

On Thursday, the 10th day of July instant, it was ordered that the matters of the petition of the said insolvent be heard on Tuesday, the 2nd day of September next, and that the said insolvent do then attend to be examined before the said Court.

Subodh Chunder Mitter, Attorney. (464—2)

In the matter of FELIX ALBERT FRANCIS PAUL DESBRUSLAIS, an insolvent.

On Thursday, the 10th day of July instant, it was ordered that the matters of the petition of the said insolvent be heard on Tuesday, the 2nd day of September next, and that the said insolvent do then attend to be examined before the said Court.

Insolvent in person. (465—2)

In the matter of THOMAS LAWRENCE MACRAE HARRIS, an insolvent.

On Wednesday, the 9th day of July instant, it was ordered that the matters of the petition of the said insolvent be heard on Tuesday, the 2nd day of September next, and that the said insolvent do then attend to be examined before the said Court.

Jogendra Nath Chatterjee, Attorney. (466—2)

In the matter of SURJEE KUMAR BASAK, residing at No. , Pathuriaghatta Street, in the town of Calcutta; Bharat Chandra Basak, residing at No. 20, Brindabun Bysack's Street, in Calcutta, aforesaid; Sarat Chandra Basak, Bheem Chunder Basak, and Charu Chunder Basak, the three last named residing at No. , Ram Chand Ghose's Lane, in Calcutta, aforesaid,—all carrying on business in copartnership under the name style, and firm of Pal & Co. as owners of machine carpentry workshop at the aforesaid premises, No. 20, Brindabun Bysack's Street, in Calcutta, aforesaid, and at Manicktollah, in the suburbs of Calcutta, aforesaid, insolvents.

On Saturday, the 5th day of July instant, it was, on the petition of Sreemutty Brojo Coomary Dassee, residing at No. 20-4, Brindabun Bysack's Street, in the town of Calcutta, a creditor of the said insolvents, adjudged that the said Surjee Kumar Basak, Bharat Chandra Basak, Sarat Chandra Basak, Bheem Chunder Basak, and Charu Chunder Basak, have committed an act of insolvency under the provisions of the Act XI, Vic., Chapter XXI, and by another order of the same date the estate and effects of the said insolvents were vested in the Official Assignee.

M. M. Chatterjee, Attorney. (467—2)

Chief Clerk's Office, the 29th day of July 1902.

In the matter of JOSEPH HYAAM ELIAS, an insolvent.

Notice that an application for an *ad-interim* protection order has been made by the said insolvent on the 1st day of August instant, and that such application will be heard and disposed of by the Acting Commissioner of the Insolvent Court, on Monday, the 11th day of August instant, at the hour of half-past 10 o'clock, in the forenoon.

☞ Any creditor of the said insolvent desirous of opposing such application must appear before the said Court at the time and place aforesaid.

Debendra Nath Bose, Attorney. (501—1)

In the matter of BRINDABUN CHUNDER BHUR, an insolvent.

Notice that an application for an *ad-interim* protection order has been made by the said insolvent on the 1st day of August instant, and that such application will be heard and disposed of by the Acting Commissioner of the Insolvent Court on Monday, the 11th day of August instant, at the hour of half-past 10 o'clock in the forenoon.

☞ Any creditor of the said insolvent desirous of opposing such application must appear before the said Court at the time and place aforesaid.

N. C. Ray, Attorney. (502—1)

In the matter of BEPIN BEHARY BOSE, an insolvent.

Notice that an application for an *ad-interim* protection order was made by the said insolvent on the 30th day of July last, and that such application will be heard and disposed of by the Acting Commissioner of the Insolvent Court on Monday, the 11th day of August instant, at the hour of half-past 10 o'clock in the forenoon.

☞ Any creditor of the said insolvent desirous of opposing such application must appear before the said Court at the time and place aforesaid.

Khagendro Nath De, Attorney. (503—1)

Chief Clerk's Office, the 5th day of August 1902.

CALCUTTA POST OFFICE NOTICE.

Mails for—	Date and hour of closing at the General Post Office, Calcutta.		Route by which despatched.
	1902	P.M.	
United Kingdom, Aden, Egypt, Europe, America, West Africa *vid* United Kingdom and East Africa *vid* Aden (and also South Africa, if superscribed on the cover *vid* United Kingdom or Aden).	7th Aug.	At 6-30	Per P. & O. steamer from Bombay.
Parcels and money-orders for the United Kingdom and other Foreign places.	6th ,,	Parcels P.M. At 5 M.-O. P.M. At 4	Ditto ditto.
* Australasian Colonies ...	11th ,,	,, 7-30	*Vid* Tuticorin and Colombo.*
† Straits Settlements (also China and Japan, if the steamer's name is superscribed on the cover).	8th ,,	,, 8-30	Per steamer *A. Apcar.*
Burma	7th ,,	,, 7-30	Per B. I. S. N. Co.'s steamer.
Burma, Penang and Singapore.	9th ,,	,, 7-30	Ditto ditto.
Akyab, Kyaukpyu and Sandoway.	9th ,,	,, 7-30	Ditto ditto.
Burma, Tavoy and Mergui ...	11th ,,	,, 7-30	Ditto ditto.
Port Blair	16th ,,	,, 7-30	*Vid* Madras.

* Although the date entered in column 2 is, as far as can be calculated, the latest safe date of posting for the next Mail steamer, full allowance being made for the steamer being in advance of her published timing, Mails for the places mentioned in column 1 are despatched daily to Colombo, so that they may proceed by any steamer that has been unusually accelerated or retarded, or by any special opportunity that may be afforded by a steamer not belonging to one of the regular lines.

† Correspondence for China and Japan is despatched daily to Colombo, so that they may proceed by the first steamer available.

1. The letter-box for Inland articles will be cleared for the forenoon Mails at the following hours:—

For Goalundo, Arakan and Chittagong, at 5-30 A.M.
For Midnapore and Orissa districts, at 8-30 A.M.
For the Eastern districts, as far as Dacca and Mymensingh, at 6-30 A.M.
For Khulna and Jessore districts, at 7-30 A.M.
For Bombay, Central Provinces and Midnapore, *vid* Bengal-Nagpur Railway, at 10-45 A.M., and with a late fee of ½ anna up to 11-35 A.M.

2. The letter-box will be cleared for the evening Mails at the following hours, viz.—

For the East Indian Railway Loop Mail, at 2-30 P.M., and with a late fee of ½ anna up to 2-55 P.M.
For the Northern Bengal, Darjeeling and Assam Mails, at 3-25 P.M., and with a late fee of ½ anna up to 3-50 P.M.
For the Bombay Mail, *vid* Jubbulpore, at 6 P.M., and with a late fee of ½ anna up to 6-30 P.M.

For the Punjab Mail, at 7-30 P.M.
For Midnapore, Orissa and Madras Presidency, at 7-30 P.M.
For the Khulna Mail, at 7-30 P.M.
For the Eastern Bengal Mail, at 7-30 P.M.
} and with a late fee of ½ anna up to 8 P.M. and with a late fee of 1 anna up to 8-45 P.M.

3. Late registered letters will be received between the following hours:—

For the Bombay Mail, *vid* Jubbulpore, from 5 P.M. to 6-15 P.M.
For the Punjab Mail, from 6 P.M. to 7 P.M.
For the Eastern Bengal Mail, from 6 P.M. to 7 P.M.
For the Khulna Mail, from 6 P.M. to 7 P.M.
For Midnapore, Orissa and the Madras Presidency, from 6 P.M. to 7 P.M.

NOTE.—The late fee on each registered letter will be 2 annas which must be prepaid in stamps on the letter.

4. Articles for Burma and for Port Blair by sea are received without late fee up to 7-30 P.M., and with a late fee of ½ anna up to 8 P.M.

5. On the latest safe day of despatch of Mails for the Australasian Colonies or any other Foreign Countries, *vid* Madras or Tuticorin, the letter-box for Foreign articles will be cleared for the last time at 7-30 P.M., and late letters and papers fully prepaid will be received up to 8-45 P.M.

6. On the day of despatch of the Mail for Europe (Thursday), the letter-box for Foreign articles will be cleared for the last time, or articles, without the late fee, at 6-30 P.M., and late letters and papers fully prepaid will be received up to 6-45 P.M. Late registered articles will be received from 5 to 6 P.M. On other days the letter-box for Foreign articles will be cleared for the last time, without the late fee, at 6 P.M., and late letters and papers will be received up to 6-30 P.M. for despatch by any Foreign Mails, *vid* Bombay, the same night and up to 8-30 P.M., late letters and papers up to 9 P.M., for any Foreign Mails despatched by sea. Foreign Mails for despatch *vid* Madras or Tuticorin are received up to 7-30 P.M., and with a late fee up to 8-45 P.M. The late fee for Foreign articles is 4 annas, which must be prepaid in stamps affixed to the articles.

JOHN OWENS,
Presidency Postmaster.

CALCUTTA G. P. O.,
The 5th August 1902.

NADIA RIVERS.

Report showing the least depths of water for the week ending Friday, the 1st August 1902.

Name of river	Reach of river.	Least depth of water soundings.		Remarks.
		Ft.	in.	
Bhagrathi.	Entrance from Ganges ...	20	6	
	Thence to Giriah ...	16	0	Momentola.
	From Giriah to Jangipur ...	17	0	Radhanagar.
	,, Jangipur to Berhampore	14	0	Berhampore.
	,, Berhampore to Katwa	15	0	Mirzapur.
	,, Katwa to Nadia ...	18	0	Dewangunge.
Bhyrub-Jalangi.	Entrance from Ganges ...	17	0	
	Thence to Akriganj	17	0	Chakharpara.
	Akriganj to junction of the Bhyrub and Jalangi	14	0	Purandapur.
	Thence to Patkabari	21	0	Lalnagar.
	Patkabari to Nadia	17	0	Palashipora.
Mathabhanga.	Entrance from Ganges ...	16	0	
	Thence to Dewanganj	16	3	Jamalpur.
	From Dewanganj to Shikarpur	16	0	Ayadanga.
	,, Shikarpur to Boalia ...	16	0	Mohammadpur.
	,, Boalia to Chuadanga ...	17	3	Bhangbora.
	,, Chuadanga to Kissenganj and Hanskhali...	14	6	Shibnibash.

Gauge Readings.

	Locality.	Date.	Hour.	Height above zero.	Height above mean sea level.	Remarks.
Ganges ...	Sahebganj ...	2-8-1902	A.M. 6	Ft. 20·00	Ft. 38·09	Rising.
	Rampur Boalia...	2-8-1902	Noon	20·00	62 00	Do.
	Entrance of Bhagirathi Geriah ..	3-8-1902	A.M. 7	...	71·65	Do.
	Entrance of Bhyrub Jalangi Akhriganj ...	3-8-1902	A.M. 7	...	60·40	Do.
Bhagirathi.	Entrance of Mathabhanga ...	31-7-1902	...	19·75	...	Do.
	Jangipur ...	3-8-1902	...	...	66·80	Do.
	Berhampore ...	4-8-1902	A.M. 10	25·25	59·00	Do.
	Katwa ...	1-8-1902	P.M. 6	29 20	44·36	Do.
Jalangi	Krishnagar ...	1-8-1902	...	21·08	...	Do.
	Sarupganj ...	2-8-1902	Noon	...	25·20	Do
Mathabhanga.	Hanskhali ...	2-8-1902	...	17·90	...	Do.

A. K. BANERJEE, *Acctt.*,
For *Exe. Engr., Nadia Rivers Division.*
Berhampore, the 4th August 1902.

GOVERNMENT PUBLICATIONS FOR SALE

At the Bengal Secretariat Book Depôt, Writers' Buildings, Calcutta, and by the following Agents :—

AGENTS IN INDIA.

Messrs. Thacker, Spink & Co., Calcutta and Simla.
Messrs. Newman & Co., Calcutta.
Messrs. Higginbotham & Co., Madras.
Messrs. Thacker & Co., Ld., Bombay.
Messrs. A. J. Combridge & Co., Bombay.
Mr. E. Seymour Hale, 53 Esplanade Road, Fort, Bombay, and Calcutta.
The Superintendent, American Baptist Mission Press, Rangoon.
Messrs. S. K. Lahiri & Co., Printers and Booksellers, College Street, Calcutta.
Rai Sahib M. Gulab Singh & Sons, Proprietors of the Mufid-i-am Press, Lahore, Punjab.
Messrs. V. Kalyanarama Iyer & Co., Booksellers, &c., Madras.
Messrs. D. B Taraporevala, Sons & Co., Booksellers, Bombay.

AGENTS IN ENGLAND.

Mr. E. A. Arnold 37 Bedford Street, Strand, London.
Messrs. Constable & Co., 2 Whitehall Gardens, London.
Messrs. Sampson Low, Marston & Co., St. Dunstan's House, Fetter Lane, London.
Messrs. Luzac & Co., 46 Great Russell Street, London.
Messrs. Kegan Paul, Trench, Trübner & Co., Charing Cross Road, London.
Mr. B. Alfred Quaritch, 15 Piccadilly, London.
Messrs. P. S. King & Son, 2 & 4 Great Smith, Street, Westminister, London.
Messrs. H. S King & Co., 65 Cornhill, London.
Messrs. Williams and Norgate, Oxford.
Messrs. Deighton Bell & Co., Cambridge.

AGENTS ON THE CONTINENT.

Messrs R. Friedlander & Sohn, Berlin, N. W. Carlstrasse, 11.
Mr. Otto Harrassowitz, Leipzig.
Mr. Karl Hiersemann, Leipzig.
Mr. Ernest Leroux, 28 Rue Bonaparte, Paris.
Mr. Martinus Nijhoff, The Hague.

NOTICE.—Books required for private use can be purchased. Applications should be accompanied by a remittance in each case.

All remittances on account of subscriptions to, or prices of, Gazettes, Indian Law Reports or other Government publications available for sale at the Bengal Secretariat Book Depôt, or for cost of advertisements published in the Gazettes should, in future, be made payable to the "Treasurer, Bengal Secretariat, Calcutta." Advices of such remittances, if separately sent, should be addressed to the "Accountant, Bengal Secretariat." All advertisements intended for publication in the *Calcutta* or *Bengali Gazette* should be sent direct to the Superintendent, Government Printing, Bengal.

Books required for the Public Service should be obtained through the Heads of Departments.

☞ *The amounts within parentheses are for packing and postage.*

NEW PUBLICATIONS ISSUED DURING THE CURRENT QUARTER.

APPOINTMENT DEPARTMENT.

Quarterly Civil List of Bengal, corrected up to 1st July 1902. Super-Royal 8vo. Paper cover. Rs. 3. (4*a*.)

GENERAL DEPARTMENT.

Report of Emigration from the Port of Calcutta to British and Foreign Colonies, 1901. By the Protector of Emigrants, Calcutta. F'cap. Paper cover. 12*a*. (1*a*.)

Civil Engineering College, Sibpur, Calendar for 1902. Royal 8vo. Paper cover. 12*a*. (2*a*.)

LEGISLATIVE DEPARTMENT.

The Bengal Vaccination Act, 1880 (Bengal Act V of 1880), as modified up to 1st June 1902. Royal 8vo. Paper cover. Price 4*a*. (1*a*.)

The Salt Act, 1864 (Bengal Act VII of 1864), as modified up to 1st July 1902, with an appendix showing the extent to which the Indian Salt Act, 1882, is in force in Bengal. Royal 8vo. Paper cover. 8*a*. (1*a*.)

POLITICAL DEPARTMENT.

Administration Report on the Jails of Bengal for the year 1901. F'cap. Board. Paper cover. Rs. 3. (3*a*.)

PUBLIC WORKS DEPARTMENT.

Electric Traction.—Six lectures delivered in March 1902 at the Civil Engineering College, Sibpur, by J. W. Meares, Esq., Electrical Engineer to the Government of Bengal. Royal 8vo. Full cloth. Re. 1-8,. (2*a*.)

Classified List and Distribution Return of Establishment of the Public Works Department, Bengal, corrected up to 30th June 1902. Super-Royal 8vo. Paper cover. 4*a*. (1*a*.)

REVENUE DEPARTMENT.

Season and Crop Report of Bengal for the year 1901-1902. F'cap. Paper cover. 8*a*. (1*a*.)

The Sale Law Manual, a Manual of the Revenue and the Patni Sale Laws with Notes and the rules, &c., under them. Royal 8vo. Board. Paper cover. Re. 1-4. (3*a*.)

Price-list of staple food-crops in the local areas of Bengal, for the period from 1st January to 31st March 1901. F'cap. Board. Paper cover. Re. 1. (2*a*.)

Rules for the keeping and inspection of accounts of collections in Government and Wards' Estates. Published under the authority of the Board of Revenue, L. P. Royal 8vo. Board. Paper cover. As. 8. (1*a*.)

The Government Estates' Manual, 1902. Royal 8vo. Board. Paper cover. Re. 1. (3*a*.)

PUBLICATIONS ISSUED BETWEEN THE 1ST JANUARY AND THE 30TH JUNE 1902.

APPOINTMENT DEPARTMENT.

Quarterly Civil List of Bengal corrected up to 1st April 1902. Super-royal 8vo. Paper cover. Price Rs. 3. (4*a*.)

FINANCIAL DEPARTMENT.

The Stamp Manual, 1902. A Manual for the guidance of officers in the administration of the Stamp Department. Royal 8vo. Board. Paper cover. Price Re. 1-8 (6*a*.)

Annual Report on the consumption of Stationery in Bengal during 1900-1901. F'cap. Paper cover. Re. 1. (2*a*.)

GENERAL DEPARTMENT.

List of Officers in the Subordinate Educational Service, Bengal, corrected up to 1st April 1902. F'cap. Paper cover. 8*a*. (1*a*.)

JUDICIAL DEPARTMENT.

Question Papers set at the Pleadership and Muktearship Examinations for the year 1902. Royal 8vo. Paper cover. Price 2*a*. (1*a*.)

Question Papers set at the Examination of candidates for appointment as Sub-Inspectors of Police. July and November 1901. Royal 8vo. Paper cover. Price 5*a*. (1*a*.)

Question Papers set at the Examination of candidates for recruiting the staff of Superior Police Officers in Bengal and Assam, held in November 1901. Royal 8vo. Paper cover. Price 8*a*. (1*a*.)

LEGISLATIVE DEPARTMENT.

The Court of Wards' Act, 1879 (Bengal Act IX of 1879), in Hindi, as modified up to the 1st July 1901. Royal 8vo. Paper cover. Price 6*a*. (1*a*.)

The Calcutta Port Act, 1890 (Bengal Act III of 1890), as modified up to 1st April 1902. Royal 8vo. Paper cover. Price 10*a*. (1*a*.)

MUNICIPAL DEPARTMENT.

Annual Returns of the Lunatic Asylums in Bengal with brief notes for the year 1901. Compiled by the Inspector-General of Civil Hospitals. F'cap. Paper cover. Price Re. 1. (2*a*.)

Account Rules under the Local Self-Government Act, Part VIII. F'cap. Paper cover. Price 8*a*. (.)

Annual Report of the Chemical Examiner's Department, Bengal, 1901. F'cap. Paper cover Price 8*a*. (2*a*.)

PUBLIC WORKS DEPARTMENT.

Distribution Return of Officers and Subordinates employed on Local Works in Bengal, corrected up to 31st December 1901. Super-royal 8vo. Paper cover. Price 2*a*. (1*a*.)

Embankment and Drainage Report of the Government of Bengal, Irrigation Department, for the year 1900-1901. F'cap. Boards Paper cover. Price Re. 2 (3*a*.)

Classified List and Distribution Return of Establishment corrected up to 31st March 1902. Super-royal 8vo. Paper cover. Price 4*a*. (1*a*.)

Dacca Electric Lighting License, 1902. F'cap. Paper cover. Price 14*a*. (1*a*.)

Notes on the construction of Railways in India (for students) with 5 charts. F'cap Paper cover. Price Re. 1. (1*a*.)

REVENUE DEPARTMENT.

Annual Report of the Burdwan Experimental Farm for the year 1900-1901. F'cap. Paper cover. Price 3*a*. (1*a*.)

Annual Report on the Survey Operations in Bengal during the year 1900-1901 (from 1st October 1900 to 30th September 1901) F'cap. Paper cover. Price Re. 1-8. (2*a*.)

Annual Report of the Director of the Department of Land Records, Bengal, on Settlements, for the year ending 30th September 1901 F'cap. Paper cover. Price 8*a*. (1*a*.)

The Practice and Procedure Manual, published under the authority of the Board of Revenue. Royal 8vo. Board. Paper cover. Price 12*a*. (3*a*.)

OLDER PUBLICATIONS.

A General Catalogue of all Government Publications (corrected up to 31st December, 1901) may be obtained *gratis* on application to the Officer in charge, Bengal Secretariat Book Depôt.

Publications for sale at the office of the Chief Inspector of Explosives with the Government of India.

Rules for the manufacture, possession and sale of explosives issued by each of the Local Governments and Administrations. Price 12*a*.

Rules for the transport and importation of explosives issued by the Government of India. Price 12*a*.

Rules for the transport and importation of explosives at the Port of Calcutta. Price 4*a*.

GOVERNMENT PUBLICATIONS FOR SALE

BY THE SUPERINTENDENT OF GOVERNMENT PRINTING, INDIA, 8 HASTINGS STREET, CALCUTTA.

[A General Catalogue of all Government Publications may be obtained gratis from the Government Central Press, Calcutta.]

All books published by the Superintendent of Government Printing, India, can be purchased, either directly or through the following or any other booksellers:—

AGENTS IN INDIA.

Messrs. Thacker, Spink & Co., Calcutta and Simla.
Messrs. Newman & Co., Calcutta.
Messrs. Higginbotham & Co., Madras.
Messrs. Thacker & Co., Ld., Bombay.
Messrs. A. J. Combridge & Co., Bombay.
Messrs. V. Kalyanarama Iyer & Co., Madras.
Messrs. D. B. Taraporevala, Sons & Co., Bombay
Superintendent, American Baptist Mission Press, Rangoon.
Rai Sahib M Gulab Singh and Sons, Mufid-I-Am Press, Lahore.
Manager, Educational Book Depôts, Nagpur and Jubbulpore.*
Manager of the Imperial Book Depôt, 63 Chandni Chauk Street, Delhi.*
Manager, "East Coast News," Vizagapatam *
Manager, "The Agra Medical Hall and Co-operative Association, Limited" (Successors to A. John & Co.), Agra.*
Mr. T. K. Seetharama Aiyar, Kumbakonam.*
Lala Debi Prasad, Vakil and Manager of Law Press, Cawnpore.*

AGENTS IN EUROPE.

Mr. E. A. Arnold, 37 Bedford Street, Strand, London.
Messrs. Constable & Co., 2 Whitehall Gardens, London.
Messrs. Sampson Low, Marston & Co., St. Dunstan's House, Fetter Lane, London
Messrs. Luzac & Co., 46 Great Russel Street, London.
Messrs. Kegan Paul, Trench, Trübner & Co., Charing Cross Road, London.
Mr. B Alfred Quaritch, 15 Piccadilly, London.
Messrs P. S. King and Son, 2 & 4 Great Smith Street, Westminster.
Messrs. H. S King & Co., 65 Cornhill, London, are also Agents for the sale of the Indian Army List.
Mr. Otto Harrassowitz, Mr. Karl Hiersemann } Leipzig.
Messrs. R. Friedlander & Sohn, Berlin, N. W. Carlstrasse, 11.
Mr. Ernest Leroux, 28 Rue Bonaparte, Paris.
Mr. Martinus Nijhoff, the Hague, Holland.
Messrs. Williams and Norgate, Oxford.
Messrs. Deighton Bell & Co., Cambridge.

* Agents for sale of the Legislative Department publications.

NOTICE.—Books and Acts required for private use only can be purchased. Applications should be accompanied by a remittance, unless it is wished that the books should be sent by value-payable post, in which case, besides the ordinary postage, an additional charge is made for registration and commission.

Books and Acts required for the public service should be obtained through Local Governments to whom the applicant is subordinate.

Applications for Government publications which are no longer in print should be made to the Agents of the particular Government under whose orders they were originally issued.

The amounts within parentheses are for packing and postage

List of New Books published during the Current Quarter.

LEGISLATIVE DEPARTMENT.

List of General rules and orders under Statutes and General Acts in force in British India, Corrected to 31st March 1902. Royal 8vo. Stitched. Re. 1 8*a*. or 2*s*. 3*d*. (3*a*.)

HOME DEPARTMENT.

Report on the Nature of Kala-Azar, by Major Ronald Ross, I.M.S. F'cap. Board. Rs. 2 or 3*s*. (8*a*.)

FINANCE AND COMMERCE DEPARTMENT.

List of Officers in the Finance and Commerce Department. Corrected to 1st May 1902. Royal 8vo. Paper cover. 4*a*. or 5*d*. (1*a*.)

Statistics compiled from the Finance and Revenue Accounts of the Government of India. Receipts and Disbursements of Home and Indian Accounts from 1st April 1892 to 31st March 1900. F'cap. Board. Rs. 2 or 3*s*. (7*a*.)

STATISTICAL DEPARTMENT.

Review of the Trade of India in 1901-1902. F'cap. Paper cover. 8*a*. or 9*d*. (2*a*.)

Statistics of Cotton Spinning and Weaving in the Indian Mills in April 1902, and in the corresponding month of 1900 and 1901. Royal 8vo. Stitched. 2*a*. or 2*d*. (1*a*.)

Accounts of the External Land Trade of British India for the month of April 1902. Royal 8vo. Stitched. 8*a*. or 9*d*. (2*a*.)

Trade and Navigation Accounts of British India for the month of June 1902. No. 3. Royal 8vo. Stitched. 8*a*. or 9*d*. (2*a*.)

MILITARY DEPARTMENT.

List of Light-houses and Light-vessels in British India, including those in the Gulf of Aden as existing at the end of 1901. 21st Issue. Royal 8vo. Board. Re. 1 or 1*s*. 6*d*. (2*a*.)

The Quarterly Indian Army List for July 1902. Royal 8vo. Paper cover. Rs 3 or 4*s*. 6*d*. (8*a*.)

PUBLIC WORKS DEPARTMENT.

Administration Report on the Railways in India for the calendar year 1901. F'cap. Paper cover. Rs 2 or 2*s*. 8*d*. (8*a*.)

Public Works Department Classified List and Distribution Return of Establishment. Corrected to 30th June 1902. Super Royal 8vo. Paper cover. Rs. 2 or 3*s*. (4*a*.)

Classified List of the Subordinate Establishment. Corrected to 30th June 1902. Super Royal 8vo. Paper cover, 4*a*. or 5*d*. (1*a*.)

List of Books published from January to June 1902.

LEGISLATIVE DEPARTMENT.

Chronological Tables of the Indian Statutes compiled, under the orders of the Government of India, by F. G. Wigley, Esq. Royal 8vo. Cloth. *Rs.* 4 or 6*s.* (7*a.*)

The Indian Penal Code (Act XLV of 1860), as modified up to the 1st July 1899, and with foot-notes brought down to 1st April 1901. *Rs.* 2-8 or 3*s.* 9*d.* (6*a.*)

The Indian Factories Act, 1881, as modified up to the 1st April 1891 (with foot-notes brought down to 1st July 1901). 5*a.* 6*p.* or 6*d.* (1*a.* 6*p.*)

Effect of Legislation for 1898, 1899, and 1900. *Re.* 1 or 1*s.* 6*d.* (2*a.*)

Chronological Tables of the Indian Statutes, 1 01. *Re.* 1 or 1*s.* 6*d.* (2*a.*)

A Digest of Indian Law Cases, Vol. III. Cloth bound. *Rs.* 12 or 18*s.* (10*a.*)

Ditto ditto ditto. Quarter bound. *Rs.* 13 or 19*s.* 6*d.* (10*a.*)

Act IX of 1901. An Act further to amend the Indian Articles of War. 1*a.* or 1*d.* (1*a.*)

Act X of 1901. An Act further to amend the Court-fees Act, 1870. 1*a.* 3*p* or 1*d.* (1*a.*)

Act XI of 1901. An Act to facilitate the citation of certain Enactments and to amend and repeal certain obsolete Enactments.

Regulation III of 1901. A Regulation further to provide for the suppression of crime in certain frontier districts. 7*a.* 6*p.* or 9*d.* (1*a.* 6*p.*)

Regulation IV of 1901. A Regulation to make better provision for the suppression of murderous outrages in certain frontier tracts. 2*a.* 6*p.* (1*a.*)

Regulation V of 1901. A Regulation further to amend the Upper Burma Land and Revenue Regulation, 1899 1*a.* 9*p.* or 2*d.* (1*a.*)

Regulation VI of 1901. A Regulation to repeal so much as is unrepealed of the Punjab Frontier Regulation, 1872, and of the Hazara Settlement Rules, 1*a.* or 1*d* (1*a.*)

Regulation VII of 1901. A Regulation to alter certain of the laws in force in the North-West Frontier Province, to declare that certain Enactments are in force therein, and to bar the application of certain others hereto. 11*a.* or 1*s.* 3*d.* (2*a.*)

Corrigendum slip for Act XIII of 1900. 1*a.*

Title-page and Contents to Acts of 1901. 1*a.* 6*p* (1*a.*)

Index to Acts of 1901. 2*a.* 9*p.* or 3*d.* (1*a.*)

The European Vagrancy Act, 1874 (IX of 1874), as modified up to 1st December, 1901. 6*a.* 6*p.* or 7*d.* (1*a.*)

The Chaukidars Act, 1856 (XX of 1856), as modified up to 1st December, 1901. 7*a.* 6*p.* or 8*d.* (1*a.*)

The Registration of Ships Act, 1841 and 1850 (X of 1841 and XI of 1850), as modified up to 1st December 1893, and with foot-notes brought down to 1st December, 1901. 7*a.* or 7*d.* (1*a.*)

Table showing the effect of Legislation in the Governor-General's Council during 1901. 6*a.* or 6*d.* (1*a.*)

LIST OF TRANSLATIONS AND TRANSLITERATIONS OF ACTS PUBLISHED FROM 1ST OCTOBER 1901 TO 31ST MARCH 1902.

The Cattle-trespass Act, 1871 (I of 1871), as modified up to the 1st April 1901. In Urdu. 2*a.* (1*a.*)

Ditto. In Hindi. 2*a.* (1*a.*)

Act IX of 1901 (an Act further to amend the Indian Articles of War). In Urdu. 3*p.* (1*a.*)

Ditto. In Hindi. 3*p.* 1*a.*

Act X of 1901 (an Act further to amend the Court-fees Act, 1870). In Urdu 3*p.* (1*a.*)

Ditto. In Hindi. 3*p.* (1*a.*)

HOME DEPARTMENT.

Chronological Tables for 1902, embodying Notifications by the Government of Bengal and Government of India prescribing holidays during the year with corresponding dates in English, Bengali, Velati, Fusli etc. Royal 8vo. Paper cover. 4*a.* or 4*d.* (1*a.*)

Annual Report of the Sanitary Commissioner with the Government of India, 1900, with Appendices and Returns of Sickness and Mortality among European Troops, Native Troops, and Prisoners in India, for the year. F'cap. Boards. *Rs.* 3 or 4*s.* 6*d.* (8*a.*)

Report of Proceedings of the Central Indigenous Drugs Committee of India, Volume I. Royal 8vo. Board. Rs. 3-8 or 5*s.* 3*d.* (7*a.*)

List of Europeans and others in the English Factories in Bengal at the time of the Siege of Calcutta in the year 1756, with an appendix containing lists of European Sufferers. By S. Charles Hill, Esq., B.A., B.SC. Super-Royal 4to. Paper cover. Rs 2 or 3*s.* (3*a.*)

Judicial and Administrative Statistics for British India. 6th issue, 1900-1901, and preceding years. F'cap. Board. Rs. 2 or 3*s.* (10*a.*)

The Countess of Dufferin's Fund Seventeenth Annual Report of the National Association for Supplying Female Medical Aid to the Women of India for the year 1901. Super-Royal 8vo. Re. 1 or 1*s.* 4*d.* (3*a.*)

DEPARTMENT OF REVENUE AND AGRICULTURE.

List of Officers in the Survey and other Scientific and Minor Departments subordinate to the Government of India in the Department of Revenue and Agriculture, corrected to 1st July 1901. Royal 8vo. Paper cover. 8*a.* or 9*d.* (2*a.*)

Report of the Committee on the Establishment of Co-operative Credit Societies in India F'cap Paper cover. 4*a.* or 5*d.* (2*a.*)

Forest Flora of the School Circle, North-Western Provinces, being a descriptive list of the indigenous woody plants of the Shaharanpur and Dehra Dun districts and the adjoining portions of the Tehri-Garhwal State in the North-Western Provinces, with Analyses. Double Crown. 16mo. Full cloth. Re. 1-8 or 2*s.* (3*a.*)

Archæological Exploration in Chinese Turkestan. By Dr. M. A. Stein. Royal 4to. Cloth. Rs. 4 or 6*s* (4*a.*)

Land Revenue Policy of the Indian Government. Royal 8vo. Cloth. 10*a.* or 1*s.* (4*a.*)

FOREIGN DEPARTMENT.

Report on the Administration of the Baluchistan Agency for 1900-1901. Re. 1-8 or 2*s.* 3*d.* (3*a.*)

Report on the Administration of the Hyderabad Assigned Districts for the year 1900-1901. F'cap. Limp cover. Rs. 3-12 or 5*s.* 6*d.* (6*a.*)

Report on the Political Administration of the territories within the Central India Agency for 1900 1901. F'cap. Limp cover. *Re.* 1-8 or 2*s.* (3*a*)

Annotated Returns of the Dispensaries in Central India for 1900. F'cap. Limp cover. *Re.* 1-8 or 2*s.* (3*a.*)

Report on the Administration of the Civil and Military Station of Bangalore for the year 1900 1901. F'cap. Board 8*a.* or 9*d.* (2*a.*)

Grammar and Vocabulary of Waziri Pashto. By J. G. Lorimer, Esq., I.C.S. Royal 8vo. Board. Rs. 3 or 4*s.* 6*d.* (5*a*)

FINANCE AND COMMERCE DEPARTMENT.

List of Officers in the Finance and Commerce Department. Corrected to December 1901; to April 1902 4*a* or 5*d.* (1*a.*) each.

Papers relating to the proposed Establishment of a Central Bank in India. F'cap. Board. Re. 1 or 1*s.* 6*d.* (4*a.*)

Administration Report of the Mint at Bombay and Calcutta for 1900-1901. F'cap. Paper cover. Re. 1 or 1*s.* 6*d.* (2*a.*)

Schedule IV of the Indian Tariff Act (VIII of 1878) of 1902. Royal 8vo. Stitched. 6*a.* or 6*d.* (1*a.*)

STATISTICAL DEPARTMENT.

Trade and Navigation Accounts of British India for the months of December 1901 to May 1902. Royal 8vo. Stitched. 8*a.* or 9*d.* (2*a.*) each.

Accounts of the External Land Trade of British India for the months of September 1901 to March 1902. Royal 8vo. Stitched. 8*a.* or 9*d.* (2*a.*) each.

Accounts relating to the Trade carried by Rail and River in India in the quarter ending September 1901. Compared with the corresponding periods of the years 1899 and 1900. No. 2 of 1901-1902. F'cap. Paper cover. 8*a.* or 9*d.* (2*a.*)

Ditto ditto ending December 1901. Compared with the corresponding periods of the years 1899 and 1900. No. 3 of 1901-1902. F'cap. Paper cover. 8*a.* or 9*d.* (2*a.*)

Accounts of the Trade of the French Possessions in India in the year ending 31st March 1901, and the four preceding years. F'cap. Paper cover. 2*a* or 3*d.* (1*a.*)

Statistics of Cotton Spinning and Weaving in the Indian Mills in January, February, and March 1902; in the ten months, April 1901 to January 1902; in the eleven months, April 1901 to February 1902, and in the twelve months, April 1901 to March 1902. Compared with the corresponding period of 1899-1900 and 1900-1901. Royal 8vo. Stitched. 2*a.* or 2*d.* (1*a.*) each.

Accounts of the Trade of Aden in the year ending 31st March 1901, and the four preceding years. F'cap. Paper cover. 10*a.* or 1*s.* (2*a.*)

Accounts of the Trade of the Portuguese Possessions in India in the year 1899-1900 and the four pre ceding years. F'cap. Paper cover. 2*a.* 3*d.* (1*a.*)

Prices and Wages in India. Nineteenth issue, 1902. Super-Royal 4to. Board. Re. 1-8 or 2*s* (9*a.*)

COMPTROLLER-GENERAL.

Finance and Revenue Accounts of the Government of India for 1900-1901. F'cap Board. Rs. 2 or 3*s.* (8*a.*)

Appropriation Report on the Accounts of the Government of India for 1900-1901. By A. F. Cox, Esq. F'cap. Board. 8*a.* (5*a*).

MILITARY DEPARTMENT.

The Monthly Indian Army List for February to March, May, June 1902. Royal 8vo. Paper cover. Re. 1-8 or 2*s.* 3*d.* (4*a.*) each.

Return of Wrecks and Casualties in Indian Waters for the year 1900. F'cap. Stiff cover. 12*a.* or 1*s.* (3*a.*)

Military Works Services Classified List and Distribution Return. Corrected up to 31st December 1901. Royal 8vo. Paper cover. 4*a.* or 5*d.* (1*a.*)

Indian Military Budget Estimate for the year 1902-1903. F'cap. Board. Re. 1-8 or 2*s.* 3d. (8*a.*)

PUBLIC WORKS DEPARTMENT.

Public Works Department Classified List and Distribution Return of Establishment. Corrected up to 31st December 1901. Super-Royal 8vo. Paper cover. Rs. 2 or 3*s.* (4*a.*)

Classified List (Public Works Department), Subordinate Establishment. Corrected up to 31st December 1901. Super-Royal 8vo. Paper cover. 4*a.* or 4*d.* (1*a.*)

Budget Estimate of the Indo-European Telegraph Department for the year 1902-1903. F'cap. Paper cover. 8*a.* or 9*d.* (1*a.* 6*p.*)

Budget Estimate of the Indian Telegraph Department for the year 1902-1903. F'cap. Paper cover. 8*a.* or 9*d.* (1*a.* 6*p.*)

History of Services of the Officers of the Engineer, Accounts, and State Railway Revenue Establishments. Corrected to 31st December 1901. In two Volumes. Royal 8vo. Board. Vol. I, Rs. 2-8 or 3*s.* 9*d.* (6*a.*). Vol. II Rs. 2-8 or 8*s.* 9*d.* (6*a.*) Complete, Rs. 5 or 7*s.* 6*d.* (9*a.*)

List of new books for sale at the Thomason College, Roorkee, which were not advertised before.

Roorkee Treatise on "Railways," 4th Edition, revised by F. Wolley Dod, M.C.E. Price, Rs. 8 per copy.

Roorkee Treatise on "Irrigation Works." By Lieutenant-Colonel J. Clibborn, I.S.C., R.A., L.C.E., C.I.E. Price Rs. 9 per copy.

Roorkee Treatise on "Sanitary Engineering." Compiled by Lieutenant-Colonel J. Clibborn, I.S.C., R.A., L.C.E., C.I.E. Price, Rs. 4-8 per copy.

Roorkee Manual of "Applied Mechanics," Volume II. The stability of structures mostly by graphic methods, by Lieutenant-Colonel J. H. C. Harrison, R.E. Price, Rs. 8-2 per copy.

Roorkee Manual of Hydraulics. Price per copy, Re. 1-4. (No. XIX, Elementary Treatise). By E. F. Tipple, Esq., B.A.

Designs for Wooden Bridges, together with rules for calculating the area of waterway, &c., and Plates. By late Rai Bahadur Kunhya Lal. Price per set, Rs. 4-2.

Pamphlet on Examination for Acid Radicals: Tables giving Analysis of Acids. Price per copy, 8*a.*

Pamphlet on Examination for Acid Bases: Tables giving Analysis of Metallic Bases. Price, 8*a.* per copy.

Pamphlet on Note on Masonry Arches (College publication). Price, 4*a.* per copy.

Pamphlet on Small Direct Well Pumping Installations. Price, 4*a.* per copy.

Pamphlet on Experiments made on the passage of water through the sand of the Chenab River at the Khanki Weir. By Lieutenant-Colonel J. Clibborn, I.S.C., C.A., L.C.E., C.I.E. Price per copy, 12*a.*

Indian Household Account Book for a period of two years, comprising Daily Table Expense Account, Bread, Butter and Milk Account, Dhobey's Account, Servants' Wages Account, etc. Price, Rs. 3 per copy.

Cash must accompany order. Articles are sent by V.-P. P. to persons in Government employment only.

Application is to be made to the Curator, Thomason College Book Depôt, Roorkee.

Half-yearly list of new books and periodicals for sale at the Library of the Asiatic Society of Bengal, 57 Park Street, Calcutta.

ASIATIC SOCIETY'S PUBLICATIONS.

Proceedings Nos. 9 to 11 of 1901 and No. 1 of 1902, at 8*a.*

Journal, Part I, No. 2 of 1901, at Rs. 2.

" Part II, No. 2 of 1901, at Rs. 2.

" Part III, No. 2 of 1901, and Part III, No. 1 of 1902, at Rs. 2.

BIBLIOTHECA INDICA.

Upamitibhavaprapancha Katha. Fasc. 4 at 6*a*.
Catapatha Brahmana. Vol. I, Fasc. 5, at 6*a*.
Varsakriya Kaumudi. Fasc. 3 and 4, at 6*a*.
Nityacarapaddhati. Fasc. 2 and 3, at 6*a*.
Apastamba Sranta Sutra. Vol. III, Fasc. 16, at 6*a*.
Mahabhasyaprodipodyata. Vol. II, Fasc. 2 and 3, at 6*a*
Al-Muquddasai. (English.) Vol. I, Fasc. 2, at 12*a*.

List of Books published by the Meteorological Department during the current quarter.

Monthly Weather Review of India for the month of February 1902. By John Eliot and Lala Hem Raj (illustrated by 5 plates). Quarto. Paper cover. Re. 1.
Indian Meteorological Memoirs, Volume XII, Part III. By John Eliot (illustrated by 68 plates). Quarto. Paper cover. Rs. 3.

List of books published by Meteorological Department from 1st January to 30th June, 1902.

Monthly Weather Review of India, from September, 1901, to January, 1902. By W. L. Dallas (illustrated by five plates). Quarto. Paper cover. Re. 1 per month.
Report of the Director, Government Observatory, Bombay, for the year ending 31st December, 1901. By N. A. F. Moos. Quarto. Paper cover.
Report on the Kodaikanal and Madras Observatories for the period 1st April to 31st December, 1901. By C. Michie Smith. Quarto. Paper cover.
Indian Meteorological Memoirs, Volume XII, Part II. By John Eliot. Quarto. Paper cover. Rs. 3.
Indian Meteorological Memoirs, Volume XIII. By John Eliot. Quarto. Paper cover Rs 5.

Bengal Uncovenanted Service Family Pension Fund.

ABSTRACT STATEMENT showing the result of votes on the question submitted in Circular No. 4 of 1902:—

For the retention in office of the five Directors, Messrs. H. W. Stevens, C. A. Tweeddale, E. H. Lloyd, Rivers Howe and H. A. Twidale...	580 votes.
For the removal from the direction of the above five Directors ...	411 „

By order of the Board of Directors,

G. E. WARDE,
Secretary.

The 5th August 1902. (504—3)

The Indian Law Reports.

Published under Authority.

THE Indian Law Reports, published under the authority of the Governor-General in Council, appear in monthly parts, published as soon as possible after the first of each month at Calcutta, Madras, Bombay, and Allahabad, and comprise four series—one for the Calcutta High Court, a second for the Madras High Court, a third for the Bombay High Court, and a fourth for the Allahabad High Court. The cases heard by the Privy Council on appeal from each High Court are reported in the Series for that High Court. Cases heard by the Privy Council on appeal from Provinces in India not subject to any High Court are reported in the Calcutta Series.

The Calcutta Series is distributed by the Bengal Secretariat Book Depôt, and the Madras, Bombay, and Allahabad Series are distributed direct from Madras, Bombay, and Allahabad respectively.

In supersession of the previous advertisements, on and from the 1st January 1889 the terms of subscription and sale will be as follows for current issues as well as for back numbers of the reports from 1876:—

Terms of subscription, payable annually in advance.

For the complete series, *including postage* (Inland rate) Rs. 22-8.

Ditto, ditto (Overland rate) Rs. 28.

	Without postage.	With postage.
	Rs. A. P.	Rs. A. P.
For the Calcutta Series	10 0 0	12 8 0
„ each of the Madras, Bombay, and Allahabad Series	6 0 0	7 0 0
„ a part of the Calcutta Series purchased separately (*inclusive of postage in India*)	.....	2 0 0
„ a part of each of the Madras, Bombay, and Allahabad Series purchased separately (*inclusive of postage in India*)	.....	1 0 0

The following are the rates at which deductions will be made for parts out of print and at which duplicate copies will be supplied to subscribers when required in place of copies lost in transit, provided complaint of non-receipt is made to the Publisher within three months of the date of publication:—

	For town.	For mufassal.
	Rs. A. P.	Rs. A. P.
For the Calcutta Series, per copy ...	0 8 9	0 10 8
„ each of the Madras, Bombay, and Allahabad Series, per copy .	0 5 3	0 5 9
„ the Calcutta Series, for the year	7 2 6	8 6 3
„ each of the Madras, Bombay and Allahabad Series, for the year	4 4 6	4 11 3

Persons desiring to subscribe for or purchase the Report should apply to—

The Superintendent, Government Press, Madras.

„ Superintendent, Government Central Press, Bombay.

„ Curator of Government Books, United Provinces of Agra and Oudh, Allahabad.

„ Officer in charge, Bengal Secretariat Book Depôt, Calcutta.

Orders and subscriptions for 1902 should be at once registered and remitted by money-order payable to the Treasurer, Bengal Secretariat, Calcutta.

ADVERTISEMENTS will be received for publication on the wrappers of the Indian Law Reports, Calcutta Series, at the following rates, payable in advance—

	One page.	Half page.	Quarter page.
	Rs.	Rs.	Rs.
For one issue ...	20	14	9
„ three issues ...	55	36	24
„ six „ ...	100	68	45
„ nine „ ...	145	96	64
„ twelve „ ...	180	120	80

SEVERAL volumes of the BENGAL LAW REPORTS, from August 1868 to December 1875, and FULL BENCH RULINGS, Parts I and II, are available at the following rates:—

	Without postage.	With postage.
	Rs. A. P.	Rs. A. P.
Bengal Law Reports, for one year ... 20	0 0	22 8 0
Single copies, Rs. 2 per copy.		
Full Bench Rulings, Parts I and II ... 20	0 0	22 8 0

Obtainable at the Bengal Secretariat Book Depôt, Writers' Buildings, Calcutta.

Remittances to be forwarded to the Treasurer, Bengal Secretariat, Writers' Buildings, Calcutta.

The complete series of the INDIAN LAW REPORTS for the years 1876 to 1885, and 1890 to 1892, 1894, 1896 to 1901 having now been reprinted, are available, and may be purchased for all the years, or any particular year, on application to the Officer in charge, Bengal Secretariat Book Depôt.

The wanting parts of the Reports for the remaining years are being reprinted, and complete Reports from the beginning to date will be available shortly.

NOTICE TO SUBSCRIBERS.

SUBSCRIBERS are hereby informed that, unless complaint of non-receipt of any number is made to the Publisher of the series within three months of the date of publication, the benefits of the subscription rates for copies lost in transit will not be allowed, and full rates will be charged. The price per copy of each of the four series at subscription rates and at full rates is shown below:—

	Per copy. Subscription rate.					
	Town.			Mofussal.		
	Rs.	A.	P.	Rs.	A.	P.
Calcutta Series	0	8	9	0	10	3
Each of the Madras, Bombay, and Allahabad Series ...	0	5	3	0	5	9

	Full rate.					
	Town.			Mofussal.		
	Rs.	A.	P.	Rs.	A.	P.
Calcutta Series ...	2	0	0	2	0	0
Each of the Madras, Bombay, and Allahabad Series ...	1	0	0	1	0	0

Notice.

THE *CALCUTTA GAZETTE*.

The 1st March 1901.—From this date the subscription to, and postage for, the *Calcutta Gazette* will be at the following rates, payable in advance:—

PER ANNUM.	For Calcutta.	For the Mufussal, including postage.
	Rs. A.	Rs. A.
Entire *Gazette*	15 0	20 0
Parts I, Ia and Ib together ...	5 0	7 8
Part II	1 0	2 12
Parts III, IV and IVa together	4 0	6 0
„ V and VI together ..	2 0	3 0
Appendix (Marine Notifications)	1 0	2 12
Supplement	5 0	7 8
PER ISSUE.		
Entire *Gazette*	0 8	0 10
Supplement	0 4	0 5

N. B.—Separate Parts of each issue of the *Gazette*, and occasionally important Rules and Extracts, can be obtained from the Officer in charge, Bengal Secretariat Book Depôt, at the rate of one anna for every sixteen pages or a fraction thereof. Postage according to weight.

RATES FOR ADVERTISEMENTS in the *Calcutta Gazette*:—

Full Page, per issue	Rs. 20
Half „ „ „	„ 10

Casual advertisements, 4 annas per line.

Annual Statement of the Sea-borne Trade and Navigation of the Bengal Presidency and of its Chief Port (Calcutta), and each of its Subordinate Ports—Chittagong, Balasore, Cuttack, Pooree, and Narainguage, Volumes I and II. Price Rs. 20 for 1899-1900. Published at the Calcutta Custom House. Previous years' volumes can also be obtained at the same price.

Parts I, II, and III of a Descriptive Catalogue of the Sanskrit Manuscripts in the Library of the Calcutta Sanskrit College, prepared by Pandit Hrishikesa Sastri and Babu Siva Chandra Gui, M.A., B.L., of that College are offered to the public for sale. The Catalogue is to be completed in 28 parts, the price of each part being 12 annas a copy, exclusive of postage. Copies can be obtained, from the Principal of the Sanskrit College, Calcutta.

The Calcutta Gazette.

WEDNESDAY, AUGUST 6, 1902.

PART IV.

Bill of the Bengal Council.

GOVERNMENT OF BENGAL.

LEGISLATIVE DEPARTMENT.

THE following Report of the Select Committee appointed to consider the Bill to amend the Bengal Drainage Act, 1880, together with the Bill as amended by them, is, by order of the President, published for general information:—

REPORT OF THE SELECT COMMITTEE ON THE BILL TO AMEND THE BENGAL DRAINAGE ACT, 1880.

WE, the undersigned, Members of the Select Committee appointed to consider the Bill to amend the Bengal Drainage Act, 1880, have considered the Bill and the papers noted in the margin, and have the honour to submit this our Report, with the Bill as amended by us annexed hereto.

Letter from Babu Guru Charan Ray Chaudhari, Zamindar, dated Sibpur, the 26th April, 1902. [Paper No. 1.]

Letters Nos. 84T. to 86T. and No. 117D., dated the 10th April, 1902, from the Secretary to the Bengal Council and Assistant Secretary to the Government of Bengal, Legislative Department, to the Secretary to the Board of Revenue, L. P., to the Superintendent and Remembrancer of Legal Affairs; to the President of the British Indian Association, and the Secretary to the Uttarpara People's Association. [Paper No. 2.]

Letter from the Secretary to the British Indian Association, No. 186, dated the 31st May, 1902. [Paper No. 3.]

Letter from the Officiating Secretary to the Board of Revenue, No. 519A., dated the 6th June, 1902 [Paper No. 4.]

Letter from the Superintendent and Remembrancer of Legal Affairs, No. 485, dated the 7th June, 1902. [Paper No. 5.]

Petition from Babu Jyot Kumar Mukerjee, Zamindar of Uttarpara, dated the 3rd July, 1902. [Paper No. 6.]

2. The amendments which we have made in the Bill are, as far as possible, printed in italics, and all which are of any importance are explained in the following paragraphs.

3. *Clause 2.*—This clause is new. It inserts in the Act a definition of the expression "Certificate Officer," which is used in the new section 51C.

4. *Clause 3 [section 36A].*—We have, in accordance with a suggestion made by the Superintendent and Remembrancer of Legal Affairs, in Paper No. 5, added the words "or for any other substantial reason" in section 36A (*1*).

In consequence of this addition, we have altered the opening words of the section so as to make it clear that an order made under section 35 may be revised only so far as it declares what persons are liable to pay drainage dues.

In sub-clause (*b*) we have struck out the words "by transfer or succession," so as to admit of an order being revised whenever a change of ownership has taken place under any circumstances.

We have added words to enable the Collector, when revising an order, to impose conditions as to the discharge of past liabilities.

We have added a proviso to the effect that every person who is materially affected by any addition or alteration made by the Collector must have an opportunity of being heard before the order of revision is made. This addition meets suggestions made by the Commissioner of Bhagalpur, the Board of Revenue and the Legal Remembrancer.

5. *Clause 4 (section 41A).*—We have provided specifically in sub-clause (*i*) that, when a co-sharer elects to proceed by suit, contributions towards a payment made by him may be recovered in the manner in which arrears of rent are recoverable under the Bengal Tenancy Act, 1885.

6. *Clause 6 (section 45A).*—In sub-section (*1*) we have provided that an application for the recovery of drainage dues under the certificate procedure may be made by a landlord if he has not enhanced the rent of his tenants. This takes the place of the provision made in the Bill as introduced in Council that such an application might be made if the landlord had not recovered his dues by an enhancement of rents.

7. *Clause 8 (sections 51B and 51C).*—*Sections 51B and 51C* embody in a more convenient form the provisions of section 41B, sub-sections (*3*) to (*6*) of section 45A, and sub-sections (*2*) to (*5*) of section 51A of the Bill as introduced.

The following amendments have been made in *section 51B*:—

(*1*) The period within which applications to the Collector for the benefit of the certificate procedure must be made has been extended from sixty days to three months; this period to begin to run, in the case of a payment by a co-sharer, from the date of the payment, and, in the case of sums recoverable from tenants, from the dates on which such sums respectively become due.

(*2*) The clause requiring an applicant to declare that he has not enhanced rent has been made applicable to tenures held free of rent or revenue, because, although a tenure may be held by a tenant free of rent, he may have sublet it to an under tenant at a rent.

(*3*) In clause (*e*), for the words "since the carrying out" of the said scheme or works we have substituted the words "on account of" the said scheme or works.

In section 51C (1) it has been expressly provided, as in section 7 (*1*) of the Public Demands Recovery Act, 1895, that no certificate shall be made for the recovery of drainage dues under that Act in respect of any claim which has been barred by limitation.

It has been made clear in *sections 51B and 51C* that, while certificates authorising the recovery of drainage dues under the certificate procedure are to be issued by the Collector, all subsequent proceedings are to be taken by the "Certificate Officer," which expression includes Sub-divisional Officers and specially-appointed officers.

As some apprehension has been felt that the Collector may not have time to deal with large numbers of applications for the benefit of the certificate procedure, we may mention that section 56 of the Bengal Drainage Act, 1880, will admit of his delegating this function, with the sanction of the Commissioner, to subordinates, to be exercised subject to his own control and supervision.

We have struck out the word "equitably" from proviso (*ii*) to *section 51C*, in deference to objections raised by the British Indian Association. The word appears to be open to misconstruction, and there seems to be no good reason for retaining it.

8. *Clause 8 (sections 51D to 51H)*—*Sections 51D to 51G* are new. *Section 51D* authorises the Collector to suspend the recovery of drainage dues, both from landholders and from tenants, in respect of any year during which there has been a total or serious failure of crops. *Sections 51E and 51F* contain provisions for the enforcement of orders of suspension, and *section 51G* extends the prescribed period for payment of instalments of drainage dues, when an order of suspension has been made, while *section 51H* similarly extends the period of limitation for the recovery of such dues.

9. *Clause 9.*—Two verbal amendments have been made in this clause, with the object of making it more clear that the clause applies to drainage dues which, at the commencement of the new law, have already accrued and are not barred by limitation.

The period within which applications to the Collector for the benefit of the clause must be made has, as in section 51B, been extended from sixty days to three months.

10. With reference to the remarks made by the Hon'ble BABU JOY GOBIND LAW in Council on the 9th April last, we have discussed the question of the charges made under the Act for interest, but we refrain from suggesting any amendments in the Bill in this connection because we understand that the matter is under the consideration of the Government.

11. We recommend that the Bill, as now amended, be passed.

W. C. MACPHERSON.
J. A. BOURDILLON.
B. L. GUPTA.
JOY GOBIND LAW.
R. P. SINGH.
MANINDRA CHANDRA NANDY.

CALCUTTA;
The 26th July, 1902

[AS AMENDED BY THE SELECT COMMITTEE.]

A

BILL

To amend the Bengal Drainage Act, 1880.

CONTENTS.

SECTION.

1. Short title.
2. Amendment of section 3, Bengal Act VI of 1880.
3. Insertion of new section, 36A.
   36A. Power to add to, or alter, declaration as to names of persons liable to pay.
4. Insertion of new Part, IVA.

PART IVA.

RECOVERY OF SHARE OF PAYMENTS FROM CO-SHARERS.

41A. Power to recover share of payments from co-sharers.

5. Amendment of section 45.
6. Insertion of new section, 45A.
   45A. Recovery, under the certificate procedure, of payments made in respect of land held by tenants.
7. Addition to section 48 (*1*).
8. Insertion of new sections, 51A to 51H.
   51A. Recovery, under the certificate procedure, of payments made in respect of land held free of rent or revenue.
   51B. Further provisions as to applications under section 41A, 45A or 51A.
   51C. Grant of certificate, and effect thereof.
   51D. Power of Collector to suspend recovery of dues in case of failure of crops.
   51E. Bar to jurisdiction of Courts in respect of order of suspension.
   51F. Procedure when landholder or tenant collects dues during period of suspension.
   51G. Extension of period for payment of instalments, when order of suspension made.
   51H. Extension of period of limitation, when order of suspension made.
9. Application of new sections to certain subsisting claims.

A

BILL

TO

Amend the Bengal Drainage Act, 1880.

WHEREAS it is expedient to amend the Bengal Drainage Act, 1880, in the manner hereinafter appearing; Ben. Act VI of 1880.

It is hereby enacted as follows:—

Short title. 1. This Act may be called the Bengal Drainage (Amendment) Act, 1902.

Amendment of section 3, Bengal Act VI of 1880. 2. *In section 3 of the Bengal Drainage Act, 1880, after the definition of "Collector" the following shall be inserted, namely:—*

"Certificate Officer" means a Certificate Officer as defined in clause (2) of section 4 of the Public Demands Recovery Act, 1895. Ben. I of 1895.

Insertion of new section, 36A. 3. After section 36 of the Bengal Drainage Act, 1880, the following shall be inserted, namely:—

"36A. (*1*) If any order made under section 36, *so far as it declares what* persons are liable to pay any sum under this Act in respect of any land, appears at any time to *require revision*,—

Power to add to, or alter, declaration as to names of persons liable to pay.

(*a*) by reason of the omission of the name of any co-sharer of such land, or

(*b*) by reason of any change having taken place in the ownership or joint ownership of such land, *or*

(*c*) *for any other substantial reason*,

the Collector may, on the application of any holder of the land, or of his own motion, and after such inquiry *and upon such conditions* (*if any*) as he may think proper, add to or alter such order:

Provided that every person whose name is so added or who is materially affected by any such alteration has had an opportunity of being heard by the Collector.

(*2*) Any person who is dissatisfied with any addition or alteration made under sub-section (*1*) may, within one month after the same was made, appeal to the Commissioner of the Division.

(*3*) The Commissioner shall cause notice of the day fixed for the hearing of such appeal to be published in the manner prescribed by section 35; and shall, on the day so fixed, hear such appeal and all objections thereto advanced by persons interested, and may confirm or revise the addition or alteration, or may remit the case to the Collector for further consideration and revision. [Cf. Ben. Act VI of 1880, s. 35.]

(*4*) The decision of the Commissioner on any such appeal shall be final.

(*5*) Every addition and alteration made under this section shall be published, in such manner as to the Collector may seem fit, after the expiration of one month—

(*i*) from the time when the addition or alteration was made, or

(*Clauses 4-6.*)

(*ii*) if any appeal has been preferred under sub-section (*2*) from the decision of the appeal;

and the addition or alteration shall take effect from the date of such publication; and proceedings may thereupon be taken under this Act, in respect of such addition or alteration, as if a new order embodying it had been made under section 36."

Insertion of new Part, IVA.

4. After section 41 of the said Act the following shall be inserted, namely:—

"PART IVA.

"RECOVERY OF SHARE OF PAYMENTS FROM CO-SHARERS.

[*Cf.* Ben. Act IX of 1889, s. 48.]

Power to recover share of payments from co-sharers.

"41A. When any landholder has made any payment under the foregoing provisions of this Act in respect of land which he holds jointly with other persons, and such payment exceeds the amount which is proportionate to his individual interest in the land, he may—

(*a*) recover from his co-sharers, respectively, such contributions towards such payment as are proportionate to their individual interests in the land, either—

(*i*) in the same manner *in which* arrears of rent *are recoverable under the Bengal Tenancy Act*, 1885, and under similar penalties, or VIII of 1885.

(*ii*) if such co-sharers have been declared by any order made under section 36 or revised under section 36A to be liable to pay—upon application to the Collector *as hereinafter provided*; or

(*b*) take credit for such contributions as aforesaid in any adjustment of accounts between himself and his co-sharers."

Amendment of section 45.

5. In section 45 of the said Bengal Drainage Act, 1880, after the figures "43" the words and figures "or under section 45A" shall be inserted. Ben. VI of 1880.

Insertion of new section, 45A.

6. After section 45 of the said Act the following shall be inserted, namely—

Recovery, under the certificate procedure, of payments made in respect of land held by tenants.

"45A. (*1*) If any landholder or superior tenant has made any payment under the foregoing provisions of this Act in respect of lands which are or were held by tenants immediately from him, and which have been benefited by any scheme or works carried out under this Act,

and if he has not *enhanced the rent of such tenants under* clause (*a*) of section 42 or clause (*a*) of section 43 *or* recovered *under* clause (*b*) of section 42 or clause (*b*) of section 43 the sums due to him,

he may, upon application to the Collector *as hereinafter provided*, but subject to the provisions of sub-section (*1*) of section 44 as to instalments, recover from such tenants such sums as he may be entitled to according to the proportion and under the rules laid down in clause (*c*) of section 42, with interest at the rate of five *per centum per annum* from the date of such payment.

(*2*) If any such tenants have surrendered their leases, the said sums may be so recovered from them for the period during which they occupied the benefited land since the date of the completion of the scheme or works."

(*Clauses 7, 8.*)

Addition to section 48 (*1*).

7. At the end of sub-section (*1*) of section 48 of the said Bengal Drainage Act, 1880, the following shall be added, namely:— Ben. VI of 1880.

"and for that purpose the procedure prescribed by section 41A or section 45A and sections *51B and 51C* shall be applicable."

Insertion of new sections, 51A to 51H.

8. After section 51 of the said Act the following shall be inserted, namely:—

"51A. Any person who has been determined under section 50 to be the landholder in respect of land, held free of rent or revenue, which has benefited by any scheme or works carried out under this Act, and who has made any payment under the foregoing provisions of this Act in respect of such land, may, upon application to the Collector *as hereinafter provided, but* subject to the provisions of section 51, recover the amount of such payment from *any person holding* such land *immediately below him.*

Recovery, under the certificate procedure, of payments made in respect of land held free of rent or revenue.

"51B. (*1*) Every application to the Collector under section 41A for the recovery of contributions from co-sharers towards a payment made by a landholder under the foregoing provisions of this Act must— [Cf. Ben. Act IX of 1880, s. 49.]

Further provisions as to applications under section 41A, 45A or 51A.

(*a*) be made within *three months* after such payment was made, and

(*b*) specify the amount of such payment and the amount of such contributions due from each co-sharer.

(*2*) *Every application to the Collector under section 45A or section 51A for the recovery of sums due, from tenants or holders of lands benefited by any scheme or works carried out under this Act, on account of any payment made by the applicant under the foregoing provisions of this Act must*—

(*c*) be made within *three months* after such *sums became due,*

(*d*) specify the amount of such payment, and the amount of such *sums* due from each *tenant or holder of land, as the case may be,* and

(*e*) be accompanied by a declaration, signed by the applicant and stating—

(*i*) that he has not, *on account* of the said scheme or works, enhanced the rent, *if any, payable in respect* of the said lands or any of them, and

(*ii*) that he has not taken from such tenants *or holders of land* or any of them any premium on account of such scheme or works.

(*3*) Every application under section 41A, section 45A or section 51A must—

(*f*) be signed and verified in the manner provided by sections 51 and 52 of the Code of Civil Procedure for the signature and verification of plaints, XIV of 1882.

(*g*) be accompanied by a court-fee of eight annas, and

(*h*) request the Collector to make a certificate *authorising the recovery of the said* contributions *or sums, as the case may be, under* the Public Demands Recovery Act, 1895. Ben. I of 1895.

(*4*) Every declaration made under clause (*e*) shall, for the purposes of section 199 of the Indian Penal Code, be deemed to be a declaration which the Collector is authorised by law to receive as evidence. XLV of 1860.

(*5*) If the Collector at any time has reason to believe that any declaration accompanying an application as aforesaid, or any part thereof, is false, he may reject the application and leave the applicant to pursue his claim in a Civil Court.

(*Clause 8.*)

"51C. (*1*) Upon receiving any such application, the Collector may, if he thinks fit, make a certificate as aforesaid : [Cf. Ben. Act IX of 1880, s. 49.]

Grant of certificate, and effect thereof.

Provided that no such certificate shall be made in respect of any claim which has been barred by limitation. [Cf. Ben. Act I of 1895, s. 7 (*1*), proviso.]

(*2*) Every such certificate shall have the same effect as a certificate made under section 7 of the said Public Demands Recovery Act, 1895 ; and the same notices shall be issued, and the same proceedings may be taken, with respect thereto, by the *Certificate Officer*, as in the case of a certificate *made* under that section :

Provided as follows :—

(*i*) the person in whose favour the certificate is made shall be deemed to be the decree-holder for the amount mentioned in the certificate ; and all proceedings taken by the *Certificate Officer* for the recovery of such amount shall be taken at the instance of the said person, and at his cost, and on his responsibility, and not otherwise ;

(*ii*) if any person against whom the certificate is made objects that the contributions *or sums* claimed by the person who applied for the certificate are not legally due, or exceed the *sums* which the applicant could recover from him in a Civil Court as being payable in respect of his individual interest in the land, and if the *Certificate Officer* considers there is probable ground for such objection, the *Certificate Officer* may modify the certificate or, if he thinks fit, cancel the certificate and leave the applicant to pursue his claim in a Civil Court.

"*51D.* (*1*) *If, in any area benefited by any scheme or works carried out under this Act, there has occurred in any year a total or serious failure of crops, then, notwithstanding anything hereinbefore contained, the Collector may,* [Cf. U. P. Act II of 1901, ss. 50 (*1*), 51 (*1*).

Power of Collector to suspend recovery of dues in case of failure of crops.

after such inquiry (if any) as he deems necessary, and with the previous sanction of the Commissioner of the Division,

by written order, suspend, for the whole or any part of that year, the recovery of all or any sums which are recoverable from landholders and tenants, respectively, in respect of such area under the foregoing provisions of this Act.

(*2*) *Every such order shall be published in the manner prescribed in section 12 for the publication of the notifications referred to in that section.*

(*3*) *When any such order has been duly published, all proceedings under the Public Demands Recovery Act, 1895, and all suits by landholders or tenants, for the recovery of any sums to which such order relates, shall be stayed during the period specified in the order.* [Cf. U. P. Act II of 1901, s. 51 (3).] Ben. I of 1895.

"*51E.* *An order duly made and published under section 51D shall not be questioned in any Civil or Revenue Court.* [Cf. U. P. Act II of 1901, ss. 50 (2), 51 (2).]

Bar to jurisdiction of Courts in respect of order of suspension.

"*51F.* *If any landholder or tenant, during any period specified in an order duly made and published under section 51D, collects any sums payable to him to which such order relates, then all sums payable by him to which such order relates may be recovered from him as if such order had not been made.* [Cf. U. P. Act II of 1901, s. 51 (3)].

Procedure when landholder or tenant collects dues during period of suspension.

"*51G.* *When an order has been duly made and published under section 51D, suspending the recovery of any sums for any period, then, if such sums form part of a sum which is, in pursuance of this Act, payable by instalments, the period remaining for the payment of such instalments shall be extended by the period specified in such order, and no more than one instalment of the sum remaining due shall be payable in any succeeding year.*

Extension of period for payment of instalments, when order of suspension made.

(*Clause 9.*)

"*51H. When an order has been duly made and published under section 51D, suspending the recovery of any sums for any period, such period shall be excluded in computing the period of limitation prescribed for a suit or application for the recovery of such sums.*" [*Cf. U. P. Act II of 1901, s. 51 (4)*]

Extension of period of limitation, when order of suspension made.

Application of new sections to certain subsisting claims.

9. The provisions of sections 41A, 45A, 51A, *51B* [*except clauses* (*a*) *and* (*c*)] *and 51C* of the Bengal Drainage Act, 1880, as amended by this Act, as to the recovery of moneys upon application to the Collector, shall apply also to all claims *which have already accrued* in respect of the drainage schemes of Howrah and Rajapur *and* which, at the commencement of this Act, are unsatisfied *and have not been barred by limitation :* Ben. VI of 1880.

Provided that every application under any of the said sections in respect of any such claim be made within *three months* from the commencement of this Act.

CALCUTTA ;
The 29th July, 1902.

F. G. WIGLEY,
Secretary to the Bengal Council, and
Assistant Secretary to the Govt. of Bengal,
Legislative Department.

APPENDIX TO

The Calcutta Gazette.

WEDNESDAY, AUGUST 6, 1902.

NOTICES TO MARINERS.

GOVERNMENT OF BENGAL—MARINE DEPARTMENT.

NOTICE TO MARINERS—No. 227.

[First Publication.]

BAY OF BENGAL—COROMANDEL COAST.

Mahabalipurum light—Incorrectly shown on certain charts.

THE British Admiralty has given notice (No. 411 of 1902) that on certain copies of Admiralty Chart No. 575, Mahabalipurum light is shown as a red fixed light instead of a *white group flashing* light, showing groups of *three flashes* every *ten seconds*, as described in the Admiralty List of Lights, part VI, 1902, No. 323.

Approximate position, lat. 12° 36¾′ N., long. 80° 11½′ E.

E. J. BEAUMONT, COMDR., R.I.M.,
Port Officer of Calcutta.

Published for general information.

C. B. BAYLEY,
Asst. Secy., Marine Department.

CALCUTTA, *the 28th July 1902.*

GOVERNMENT OF BENGAL—MARINE DEPARTMENT.

NOTICE TO MARINERS—No. 228.

[First Publication.]

AUSTRALIA—QUEENSLAND.

Port Curtis—North Channel closed—Marks removed.

THE British Admiralty has given notice (No. 412 of 1902) that in consequence of the decreasing depth at the inner end of the North channel into port Curtis it is no longer safe for ordinary navigation, and its use in future must be confined during daylight to small local coasting vessels.

Also, that, on 10th May 1902, all the marks and lights used in navigating the North channel would be discontinued.

These would probably be the black buoy situated at a distance of 1¼ cables S. 84° E. from East point light, the red buoy situated 1¾ cables S. 40° E. from Settlement point, Oyster rock light, and the light-buoy, exhibiting a white fixed light, situated about 3 cables S. 24° W. from Oyster rock light.

Approximate position, Oyster rock, lat. 23° 53′ S., long. 151° 22¾′ E.

(*Variation 8° Easterly in 1902.*)

This Notice affects the following Admiralty Charts:—Port Curtis, No. 1900: Also, List of Lights, part VI, 1902, No. 1267; and Australia Directory, vol. II, 1898, pages 180, 181, 182, 185.

E. J. BEAUMONT, COMDR., R.I.M.,
Port Officer of Calcutta.

Published for general information.

C. B. BAYLEY,
CALCUTTA, *the 28th July 1902.* *Asst. Secy., Marine Department.*

GOVERNMENT OF BENGAL—MARINE DEPARTMENT.

NOTICE TO MARINERS—No. 229.

[First Publication.]

KOREA—SOUTH COAST.

Willes gulf anchorage—Rock in approach.

THE British Admiralty has given notice (No. 413 of 1902) of the existence of a rock about one cable in extent, with a depth of three-quarters of a fathom over it, situated in the approach to the anchorage in Willes gulf, in lat. 34° 52′ 55″ S., long. 127° 45′ 40″ E.

This Notice affects the following Admiralty Chart:—Korean archipelago, No. 104: Also, China Sea Directory, vol. IV, 1894, page 112.

E. J. BEAUMONT, COMDR., R.I.M.,
Port Officer of Calcutta

Published for general information.

C. B. BAYLEY,
CALCUTTA, *the 28th July 1902.* *Asst. Secy., Marine Department.*

GOVERNMENT OF BENGAL—MARINE DEPARTMENT.

NOTICE TO MARINERS—No. 230.

[First Publication.]

AUSTRALIA, SOUTH—LACEPEDE BAY.

Beacon erected.

THE British Admiralty has given notice (No. 414 of 1902) that a triangular beacon with circular head, painted white, has been erected on the coast line about 5 miles to the south-westward of Kingston jetty to indicate the best holding ground in Lacepede bay. Vessels should anchor with this beacon bearing S.E. according to draught.

Approximate position, lat. 36° 54½′ S., long. 139° 47½′ E.

(*Variation 5° Easterly in 1902.*)

This Notice affects the following Admiralty Chart:—Lacepede bay on Chart No. 1006: Also, Australia Directory, vol. I, 1897, page 361.

E. J. BEAUMONT, COMDR., R.I.M.,
Port Officer of Calcutta.

Published for general information.

C. B. BAYLEY,
CALCUTTA, *the 28th July 1902.* *Asst. Secy., Marine Department.*

GOVERNMENT OF BENGAL—MARINE DEPARTMENT.

NOTICE TO MARINERS—No. 231.

[First Publication.]

JAPAN—KIUSIU, NORTH COAST.

Spex strait approach—Particulars and positions of sunken rocks named Takose and Nakazone.

THE British Admiralty has given notice (No. 418 of 1902) of the existence of the undermentioned rocks to the southward of Atsusi no o sima in the approach to Spex strait:—

a. A rock named Takose, with a depth of 2¼ fathoms over it, situated with the northern extremity of Do sima bearing S. 79 W., distant 17 cables, and Kassa yama △ N. 24° W.

Approximate position, lat. 33° 27¼′ N., long. 129° 33¾′ E.

b. A rock named Nakazone, with a depth of 4¼ fathoms over it, situated at a distance of 2⅛ cables N. 31° E. from the above.

(*Variation 4° Westerly in 1902.*)

This Notice affects the following Admiralty Charts:—Western coast of Kiusiu, &c., No. 358; Nagasaki to Karatsu, No. 359: Hirado no seto to Simonoseki strait, No. 127; Matsu sima to Atsusi no o sima, No. 140: Also, China Sea Directory, vol. IV, 1894, page 522.

E. J. BEAUMONT, COMDR., R.I.M.,
Port Officer of Calcutta.

Published for general information.

C. B. BAYLEY,
Asst. Secy., Marine Department.

CALCUTTA, *the 28th July 1902.*

GOVERNMENT OF BENGAL—MARINE DEPARTMENT.

NOTICE TO MARINERS—No. 232.

[First Publication.]

AUSTRALIA, SOUTH—PORT ADELAIDE.

Wonga shoal—A gong to be sounded at the light-house.

THE President, Marine Board, Port Adelaide, has given notice (No. 10 of 1902) that during the prevalence of fog or mist a Gong will be sounded at the above-named light-house for a period of thirty (30) seconds in duration and at intervals of five (5) minutes.

The sound will be audible in ordinary weather for a distance of about three (3) miles.

This affects Admiralty Plans 1750 and 1752.

E. J. BEAUMONT, COMDR., R.I.M.,
Port Officer of Calcutta.

Published for general information.

C. B. BAYLEY,
Asst. Secy., Marine Department.

CALCUTTA, *the 28th July 1902.*

GOVERNMENT OF BENGAL—MARINE DEPARTMENT.

NOTICE TO MARINERS—No. 233.

[First Publication.]

AUSTRALIA, SOUTH—SPENCER GULF.

Port Pirie approach—Occulting light from a beacon to be erected on the north end of Eastern Shoal.

THE President, Marine Board, Port Adelaide, has given notice (No. 11 of 1902) informing Masters of Vessels, Pilots, and others that it is proposed to exhibit, on or about the 1st August next, an Occulting Light from a Beacon to be erected on the North end of Eastern Shoal, and are advised that during the progress of the work, which may be commenced at any time, an ordinary Riding Light will be shown from a vessel moored in the vicinity.

A further notice will be issued giving full particulars at an early date.

This affects Admiralty Chart No. 2389b and Plan 403.

E. J. BEAUMONT, COMDR., R.I.M.,
Port Officer of Calcutta.

Published for general information.

C. B. BAYLEY,
Asst. Secy., Marine Department.

CALCUTTA, *the 28th July 1902.*

GOVERNMENT OF BENGAL—MARINE DEPARTMENT.

NOTICE TO MARINERS—No. 234.

[First Publication.]

INDIA, WEST—Bombay coast.

Bombay harbour—Temporary removal of the Outer light-vessel.

The Bombay Government has given notice (No. 87 of 1902) that the Light-Vessel *Bombay* will be brought in for docking, examination and repairs on the 15th October 1902. During the period she is off her station a Pilot Schooner, anchored in the Light-Vessel's position, will exhibit, in addition to her Anchor Light, two steamer's Masthead Lights, lashed back to back and suspended on a stay between the masts at a height of 56 feet above the water line.

N.B.—In day light, the *Red flag* will be hoisted when a vessel is seen as usual; and the *Blue lights* and *torches* will continue to be burnt as at present.

E. J. Beaumont, Comdr., r.i.m.,
Port Officer of Calcutta.

Published for general information.

C. B. Bayley,
Calcutta, *the 28th July 1902.* *Asst. Secy., Marine Department.*

GOVERNMENT OF BENGAL—MARINE DEPARTMENT.

NOTICE TO MARINERS—No. 219.

[Second Publication.]

BAY OF BENGAL—Burma coast.

Caution—Exact position of the reported wreck.

With reference to Notice to Mariners No. 163, dated the 5th June last, issued by this office, a further telegraphic communication has been received from the Principal Port Officer, Burma, stating that a green buoy with pole and basket marked W has been laid S. 26° E. (true) distant 4 cables from the wreck in 18 fathoms at low water. The position of the wreck is Lat. 15° 27′ 45″ N., Long. 94° 45′ E. Mariners are accordingly warned.

E. J. Beaumont, Comdr., r.i.m.,
Port Officer of Calcutta.

Published for general information.

C. B. Bayley,
Calcutta, *the 22nd July 1902.* *Asst. Secy., Marine Department.*

GOVERNMENT OF BENGAL—MARINE DEPARTMENT.

NOTICE TO MARINERS—No. 220.

[Second Publication.]

BAY OF BENGAL—Andaman islands.

North Brother—Shoal reported to the north-eastward.

The British Admiralty has given notice (No. 389 of 1902) that the R.I.M.S. *Elphinstone* reports having passed over a shoal patch on 14th March 1902 in approximately lat 11° 1′ 15″ N., long. 92° 41′ E., with North Brother island bearing S. 40° W., distant 2¾ miles.

The shoal appeared to be in the shape of a crescent extending in a westerly and south-westerly direction. The least depth obtained was 5 fathoms, sand.

(*Variation 1° Easterly in 1902.*)

This Notice affects the following Admiralty Charts:—Andaman islands, No. 825; Port Blair to Little Andaman island, No. 1398: Also, Bay of Bengal Pilot, 1901, page 303.

E. J. Beaumont, Comdr., r.i.m.,
Port Officer of Calcutta.

Published for general information.

C. B. Bayley,
Calcutta, *the 26th July 1902.* *Asst. Secy., Marine Department.*

GOVERNMENT OF BENGAL—MARINE DEPARTMENT.

NOTICE TO MARINERS—No. 221.

[Second Publication.]

EASTERN ARCHIPELAGO—SUMATRA, WEST COAST.

Stort reef—Its position—Marion reef—Its non-existence.

THE British Admiralty has given notice (No. 392 of 1902) that a recent survey shows the position of the Stort reef to be as follows:—

(*a*) Stort reef, on which there is a depth of 3½ fathoms, is about three-quarters of a mile long N. by E. and S. by W. Its south-eastern part is situated with Pulo Pië bearing N. 69° E., distant 6½ miles, and Pulo Bando, N. 1° W, or about 3 cables south of the position shown on the Chart. The south-eastern side of the reef is steep-to.

Approximate position, lat. 0° 54½′ S., long. 99° 59½′ E.

(*b*) A sounding of 50 fathoms, no bottom, was obtained in the reported position of Marion reef under conditions so favourable that the discoloration of the water over Stort reef, distant 1½ miles to the westward, could clearly be traced, no sign however of the Marion reef could be seen, and it is assumed that the vessel reporting it saw the Stort reef. This reef has therefore been expunged from the Chart.

Approximate position, lat. 0° 54′ S., long. 100° 1½′ E.

(*Variation Nil in 1902.*)

This Notice affects the following Admiralty Charts:—Acheh head to Tyinkok bay, No. 2760; Ujong Masang to Ujong Indrapura, No. 709: Also, China Sea Directory, vol. I, 1896, page 296.

E. J. BEAUMONT, COMDR., R.I.M.,
Port Officer of Calcutta.

Published for general information.

C. B. BAYLEY,
Asst. Secy., Marine Department.

CALCUTTA, *the 26th July 1902.*

GOVERNMENT OF BENGAL—MARINE DEPARTMENT.

NOTICE TO MARINERS—No. 222.

[Second Publication.]

EASTERN ARCHIPELAGO—SUMATRA, WEST COAST.

Pulo Lakotta—Non-existence of coral patch to the eastward.

THE British Admiralty has given notice (No. 393 of 1902) that a sounding of 28 fathoms has been obtained by the Netherlands Government S.S. *Condor* in a position from which Pulo Lakotta bore S. 62° W., distant 7½ miles, and Pulo Panjang N. 11° E.; and that no trace was seen of the coral patch shown on Chart No. 2760 in that position. This danger has accordingly been expunged from the Admiralty Charts.

Approximate position on Chart No. 2760, lat. 1° 54½′ N., long. 98° 6′ E.

(*Variation 2° Easterly in 1902.*)

This Notice affects the following Admiralty Chart:—Acheh head to Tyinkok bay, No. 2760: Also, China Sea Directory, vol. I, 1896, page 283.

E. J. BEAUMONT, COMDR., R.I.M.,
Port Officer of Calcutta.

Published for general information.

C. B. BAYLEY,
Asst. Secy., Marine Department.

CALCUTTA, *the 26th July 1902.*

GOVERNMENT OF BENGAL—MARINE DEPARTMENT.

NOTICE TO MARINERS—No. 223.

[Second Publication.]

AFRICA, NORTH-EAST—Red sea, western shore.

South Massawa channel—Reef in approach.

The British Admiralty has given notice (No. 395 of 1902) that information has been received from the Master of the British S.S. *Neghileh* that at 6-15 P.M. on 24th March 1902 his vessel, drawing 9 feet of water, in clear calm weather struck on a reef south-eastward of Mojeidi island in the eastern approach to South Massawa channel.

Approximate position by star observations taken at the time, lat. 15° 22½′ N., long. 41° 4′ E.

This Notice affects the following Admiralty Chart:—Red Sea, Nos. 2523, 8d: Also, Red Sea, &c., Pilot, 1900, page 208.

E. J. Beaumont, Comdr., R.I.M.,
Port Officer of Calcutta.

Published for general information.

C. B. Bayley,
Asst. Secy., Marine Department.

Calcutta, *the 26th July 1902.*

GOVERNMENT OF BENGAL—MARINE DEPARTMENT.

NOTICE TO MARINERS—No. 224.

[Second Publication.]

AFRICA, NORTH-EAST—Red sea, eastern shore.

Jidda—Wreck in inner anchorage.

The British Admiralty has given notice (No. 399 of 1902) that information, dated 6th June 1902, has been received from the Board of Trade, that the wreck of the S.S. *Alexander III* lies sunk in the inner anchorage, Jidda. From it the white beacon on Abu Harit bears S. 67° W., distant 4$\frac{1}{10}$ cables, and the house on Bahri N. 66° W.

Approximate position, lat. 21° 28′ N., long. 39° 10½′ E.

(*Variation 3° Westerly in 1902.*)

This Notice affects the following Admiralty Chart:—Jidda, No. 2599: Also, Red Sea, &c., Pilot, 1900, pages 270, 275.

E. J. Beaumont, Comdr., R.I.M.,
Port Officer of Calcutta.

Published for general information.

C. B. Bayley,
Asst. Secy., Marine Department

Calcutta, *the 26th July 1902*

GOVERNMENT OF BENGAL—MARINE DEPARTMENT.

NOTICE TO MARINERS—No. 225.

[Second Publication.]

NEW ZEALAND—North island, east coast.

Doubtless bay—Prohibited anchorage.

The British Admiralty has given notice (No. 401 of 1902) that anchorage in the vicinity of the telegraph cable in Doubtless bay is prohibited.

The anchorage area within which the cable lies is contained between a line drawn from Coal bay to Knuckle point on the east, and an imaginary line drawn N. 45° W. from river Taipa entrance on the west.

Four small beacons will shortly be erected to mark the lines of direction which the cable takes to enable vessels to keep clear of it.

Approximate position, Coal bay, lat. 35° 1′ S., long. 173° 32′ E.

(*Variation 15° Easterly in 1902.*)

This Notice affects the following Admiralty Chart:—Hokianga to Tukukaka, No. 2525: Also, New Zealand Pilot, 1901, page 69.

E. J. Beaumont, Comdr., R.I.M.,
Port Officer of Calcutta.

Published for general information.

C. B. Bayley,
Asst. Secy., Marine Department.

Calcutta, *the 26th July 1902.*

GOVERNMENT OF BENGAL—MARINE DEPARTMENT.

NOTICE TO MARINERS—No. 226.

[Second Publication.]

CHINA, SOUTH-EAST COAST—MIRS BAY.

Rock.

THE British Admiralty has given notice (No. 407 of 1902) of the existence of a rock in Mirs bay, with a depth over it of 1½ fathoms at low water springs, situated with the eastern extremity of North Gau bearing N. 43° W., distant 3 cables, and south-eastern extremity of Grass island S. 41° W.

This rock is steep-to on the eastern side, the 10-fathom contour line extending a distance of one cable to the north-eastward, half a cable to the eastward, and 1½ cables to the south-eastward.

Approximate position, lat. 22° 29′ N, long. 114° 22¾′ E.

(*Variation 1° Easterly in 1902.*)

This Notice affects the following Admiralty Charts:—Macao to Pedro Blanco, No. 3026; Hong Kong to the Brothers, No. 1962; Mirs bay, No. 1964: Also, China Sea Directory, vol. III, 1894, page 126; and Supplement, 1898, page 14.

E. J. BEAUMONT, COMDR., R.I.M.,
Port Officer of Calcutta.

Published for general information.

C. B. BAYLEY,
Asst. Secy., Marine Department.

CALCUTTA, *the 26th July 1902.*

GOVERNMENT OF BENGAL—MARINE DEPARTMENT

NOTICE TO MARINERS—No. 216.

[Third Publication.]

PACIFIC OCEAN (SOUTH)—TUAMOTU OR LOW ARCHIPELAGO.

Ernest Legouvé reef—Amended position.

WITH reference to Notice to Mariners No. 180, dated the 20th June 1902, issued by this Office, the British Admiralty has given further notice (No. 378 of 1902) that the original report of the Captain of the French vessel *Ernest Legouvé* states that he passed on December 17th, 1901, at 4 P.M., a reef about 100 yards long, in approximately lat. 35° 14′ S., long. 150° 38′ W., and not 152° 58′ W., as given by the authority for the above Notice. The second reef was also seen.

NOTE.—The longitude of 152° 58′ W. appears to have been given from the meridian of Paris.

This Notice affects the following Admiralty Charts:—Pacific oceans, Nos. 2683, 788, 783: Also, Pacific islands, vol. III, 1900, page 27.

E. J. BEAUMONT, COMDR., R.I.M.,
Port Officer of Calcutta.

Published for general information.

C. B. BAYLEY,
Asst. Secy., Marine Department.

CALCUTTA, *the 19th July 1902.*

GOVERNMENT OF BENGAL—MARINE DEPARTMENT.

NOTICE TO MARINERS—No. 217.

[Third Publication.]

INDIA, WEST—MALABAR COAST.

Cochin and Narakal—Wreck disappeared—Buoys removed.

THE British Admiralty has given notice (No. 380 of 1902) that the wreck shown on some copies of Admiralty Chart, No. 749, 12 cables N. 83° W. from Cochin lighthouse, has disappeared, and that the buoy marking it, and also the red anchoring buoy situated about 2¼ miles S. 73° W. from Narakal light, have been withdrawn.

Approximate position, Narakal light, lat. 10° 2¾′ N., long. 76° 12¾′ E.

(*Variation 1° Easterly in 1902.*)

This Notice affects the following Admiralty Chart:—Malabar coast, No. 749: Also, West Coast of Hindustan Pilot, 1898, pages 129 and 131.

E. J. BEAUMONT, COMDR., R.I.M.,
Port Officer of Calcutta.

Published for general information.

C. B. BAYLEY,
Asst. Secy., Marine Department.

CALCUTTA, *the 19th July 1902.*

GOVERNMENT OF BENGAL—MARINE DEPARTMENT.

NOTICE TO MARINERS—No. 218.

[Third Publication.]

EASTERN ARCHIPELAGO—MAKASSAR STRAIT.

North Watcher—Light established.

WITH reference to Notice to Mariners No. 92, dated the 12th April 1902, issued by this Office, the British Admiralty has given further notice (No. 382 of 1902) that a 5th order *white flashing* light *every five seconds*, elevated 295 feet above high water, and said to be visible in clear weather from a distance of 23 miles, has been established on an iron framework tower, erected on the summit of North Watcher island, northern entrance to Makassar strait.

Approximate position on Chart No. 2636, lat. 0° 35′ N., long 119° 47′ E.

This Notice affects the following Admiralty Charts :—China Sea, No. 2660b; Eastern Archipelago, No. 941a; Strait of Makassar, No. 2536: Also, List of Lights, part VI, 1902, page 98; and Eastern Archipelago, part II, 1893, page 336.

E. J. BEAUMONT, COMDR., R.I.M.,
Port Officer of Calcutta.

Published for general information.

C. B. BAYLEY,
Asst. Secy., Marine Department.

CALCUTTA, *the 19th July 1902.*

REGISTERED No., C209.]

No. 32 of 1902.

SUPPLEMENT TO

The Calcutta Gazette.

WEDNESDAY, AUGUST 6, 1902.

OFFICIAL PAPERS.

[Non-Subscribers to the GAZETTE *may receive the* SUPPLEMENT *separately on payment of five rupees per annum if delivered in Calcutta, or seven rupees and eight annas if sent by post.]*

CONTENTS.

	Page
RESOLUTION reviewing the Triennial Report on Vaccination in Bengal for the years 1899-1900, 1900-1901 and 1901-1902	1121
Weather and Crop Report for the week ending the 4th August 1902	1124
Prices-current (retail and wholesale) of food grains and salt in the head-quarters station bazars of the districts of Bengal on the 31st July 1902	1128
Areas leased for Irrigation up to end of June 1902	1134
ABSTRACT statement showing Tollage on Canals in Bengal classed as Major and Minor Works for the month of June 1902	1135
Circular and Eastern Canal for the week ending Saturday the 2nd August 1902	1136
Results of the Meteorological Observations taken at the Alipore Observatory from 27th July to 2nd August 1902	1137
Bengal Central Railway during the month of May 1902	1138
Weekly Return of Traffic Receipts on Indian Railways ...	1140

RESOLUTION REVIEWING THE TRIENNIAL REPORT ON VACCINATION IN BENGAL FOR THE YEARS 1899-1900, 1900-1901 AND 1901-1902.

MUNICIPAL DEPARTMENT—SANITATION.

Calcutta, the 30th July 1902.

RESOLUTION—No. 1962S.

READ—

The Triennial Report on Vaccination in Bengal for the years 1899-1900, 1900-1901, and 1901-1902.

Read again—

The Triennial Report on Vaccination in Bengal for the years 1896-97, 1897-98, and 1898-99, and the Resolution recorded by Government thereon.

THE report, which was due to Government on 1st June, was received on 4th July. The delay is unexplained, and is not compensated for by any special merits in the report.

2. There was an increase of operations, as compared with the last triennial period, amounting to 6 per cent. in rural areas and 13 per cent. in municipalities and dispensaries. In Calcutta the increase was 64 per cent. The increase in rural areas and mufassal municipalities would, it is said, have

been greater, if plague had not interfered with the work of vaccination. This cause had clearly no effect in Calcutta, where the plague was worst. A large proportion of the vaccinations in Calcutta, however, are secondary, while the vaccination of infants is known to be in an unsatisfactory state. This has attracted the attention of the Lieutenant-Governor, and measures are being taken by the Corporation to improve it, by providing a better system of registration of births, and by increasing the number of vaccination stations and rendering them more attractive.

3. The average work of a vaccinator has considerably increased during the triennium. In rural areas the increase from 620 to 793 is due to the exclusion of apprentices and the work done by them from the calculation. No explanation is given of the increase of work in Calcutta from 542 cases per vaccinator to 1,013. In the mufassal municipalities the increase from 482 to 569 operations is attributed to the greater activity of the Department owing to the strictures of Government in past Resolutions, but there is room for still further improvement. It is now estimated that, on an average, 1,060 operations are performed by each paid vaccinator, against 944 by licensed agency. The question of the relative merits of the licensed and paid systems is under consideration, and Government reserves its judgment on the subject until the Sanitary Commissioner has reported on it.

4. The increase of vaccination in rural areas and mufassal towns is small, and the Lieutenant-Governor trusts that the wakened interest of Magistrates and Civil Surgeons will be maintained. The increase in the districts of Mymensingh (13,215), Midnapore (35,927), 24-Parganas (33,177) is noticeable, but it is unfortunately due mainly to the prevalence of the severe epidemic of small-pox with which these districts were visited. The explanation given by the Sanitary Commissioner for the fluctuations in different districts is altogether insufficient, when they occur in neighbouring districts as Shahabad (15 per mille) and Gaya (28 per mille). In the former district the number of vaccinations was only 9·76 per mille in 1899-1900, while the average of the Patna Division was 23 per mille. Similar fluctuations are noticeable elsewhere. This point has been repeatedly noticed, and the Lieutenant-Governor regrets to find that Major Dyson has done little or nothing to examine and account for the discrepancies between the returns of different districts or, by personal supervision of the staff, to bring backward districts nearer the level of their neighbours.

5. The Sanitary Commissioner reports an improvement during the triennium in the protection afforded to the infant population. His conclusions are based on an arbitrary ratio of births of 50 per mille instead of the actual estimated figures of the year, viz., 38·57. The latter should be adopted in future. These show that 32·06 per cent. of the infant population was protected. This falls considerably below the average of other Provinces, which according to latest estimates is 45·52, and the question why results should be so indifferent in some districts is not satisfactorily answered. There may be defective classification of ages or greater willingness to bring forward children in some localities than in others, but the effect of these causes should be more closely examined. In Darbhanga 41 per cent. of the infants were vaccinated during the last year against an average of 7·4 per cent. in the years 1896—1899. And similar results are to be noticed in the 24-Parganas, Bankura, and Birbhum. In Muzaffarpur only 10 per cent. of infants were vaccinated against 41 in the neighbouring district of Darbhanga, while in Rangpur the number doubled that of Bogra. If the causes which led to these inequalities were investigated, defects might be removed. The same results are to be seen in towns where vaccination is compulsory. In the Burdwan towns practically all the infants were vaccinated, while in those of Midnapore less than 40 per cent. were protected. The figures in Statement VII, which show the protection afforded to infants in towns, are, however, of doubtful value, and in some cases the number of vaccinations greatly exceed the number of births. Until these points are explained, and it is established that the Vaccination Department and the local officers have done all that is possible, Government cannot consider the suggestion to extend compulsory measures to rural areas.

6. In the Resolution on the last triennial report, a hope was expressed that further experience would enable some conclusion to be based on the

statistics of vaccination as to its effect in reducing the mortality from small-pox. This subject has not been discussed in the present report, and, so far as can be gathered from the diagrams in paragraph 13 and the figures in Statement VI, the results are not encouraging. In Mymensingh there has always been a comparatively large percentage of vaccinations, amounting to over 4 per cent. of the population, but in 1901 the deaths from small-pox considerably exceeded those of other districts in the Division. In Shahabad, where vaccination has been very restricted, the deaths from small-pox have been less than in the neighbouring districts of Patna and Gaya. On the other hand, a comparison of the three districts of the Orissa Division shows that Balasore, where vaccination is normal, has been freer from small-pox than Cuttack and Puri, where it is defective. The percentage of population which is protected is unfortunately so small everywhere that no conclusions are possible from the statistics now available. It will be sufficient in future reports to give one diagram for the last year of the triennial period. The space so saved can be utilised in those explanations of the statistics, and comments upon them, which are so lacking upon the present occasion. The Lieutenant-Governor repeats the remark that more useful and telling work is done in small areas where the vaccination is careful and complete than by vaccination on an apparently much larger scale, where it is only occasional. It is from the former that the most clear and unmistakeable evidence can be given to all around of the protection which vaccination gives.

7. The average cost of vaccination for the period was Rs. 1,86,782, which shows a steady decline on the averages of the two preceding triennia. Of the total amount, a sum of about Rs. 1,30,000 was expended on the cost of supervision and travelling charges, and about Rs. 28,000 on paid vaccinators. The total cost in 1901-1902 to Provincial funds was Rs. 1,44,225. The balance, with the exception of a small payment of Rs. 2,844 made by the Native States of Chota Nagpur, was met from local funds. This is exclusive of the fees paid to the licensed operators.

8. The mortality from small-pox was greater during the triennium than during any period of the past ten years. The epidemic was severest in the Midnapore district and in Orissa. In the report of the Sanitary Commissioner the spread of the disease is attributed to the practice of exposing children to its attack when the small-pox is believed to be mild in character. This practice should be more fully investigated. Vigorous measures were taken to combat the disease, and vaccination increased in the affected districts.

9. The standard of inspection work, both that done by Civil Surgeons and the subordinate inspecting staff, shows a general improvement, but the work done by the Civil Surgeons is very unequal. In Midnapore, where there was a severe outbreak of small-pox, the work of the District Inspector was very defective. There was also a failure in the Sonthal Parganas. Explanations should be submitted. The work done by the Deputy Sanitary Commissioner of the Metropolitan and Eastern Bengal Circle, who inspected only 115 cases, was altogether insufficient.

10. In paragraph 19 of his report the Sanitary Commissioner comments upon the disadvantages under which the Vaccination Department labours in Bengal. The Lieutenant-Governor is disposed to think that the Sanitary Commissioner has exaggerated the unpopularity of vaccination, and adheres to the opinion which he expressed in the Resolution on the report for the last triennium that its advantages are fairly recognized by the people of Bengal, and that such opposition as is encountered is based on a reluctance to pay the fees demanded by the licensed vaccinators. This subject will be more fully examined when the report on the proposal to substitute paid for licensed vaccinators is received.

By order of the Lieutenant-Governor of Bengal,

E. W. COLLIN,

Offg. Secretary to the Govt. of Bengal.

WEATHER AND CROP REPORT.

For the week ending on the 4th August 1902.

Burdwan.—Rainfall at Sadar 2·20, Kalna 4·99, Katwa 3·63, Raniganj 3·07. Weather cloudy. Transplantation going on. Fodder and water sufficient. Condition of cattle good. Common rice sells at 12 seers per rupee.

Birbhum.—Rainfall at Sadar 6·99, Rampur Hât 5·44. Weather cloudy and rainy. Transplantation vigorously pushed on. Sugarcane promising. Fodder sufficient. Common rice sells at 12 seers per rupee.

Bankura.—Rainfall at Sadar ·98, Vishnupur 5·95. More rain wanted. Transplantation going on. Weather hot. Sugarcane growing well. Fodder and water sufficient. Common rice sells at 12¼ seers per rupee.

Midnapore.—Rainfall at Sadar 5·54, Contai 7·64, Tamluk 2·22, Ghatal 6·69. Weather rainy. Transplantation of *aman* going on. Agricultural prospects fair. Fodder and water sufficient. Cattle-disease reported from thana Binpur. Common rice sells as follows:—

				Srs.	ch.	
Sadar	...	...	...	12	0	per rupee.
Contai	...	...	...	12	0	
Tamluk	...	...	...	11	12	
Ghatal	...	...	...	12	0	

Hooghly.—Rainfall at Sadar 4·06, Serampore 5·40, Arambagh 4·38. State of standing crops good. Fodder and water sufficient. Common rice sells as follows:—

				Srs.	ch.	
Sadar	...	...	...	10	0	per rupee.
Serampore	...	...	...	10	9	
Arambagh	...	...	...	12	0	

Howrah.—Rainfall at Sadar 5·50, Ulubaria 2·90. Fall general. No more rain wanted. Transplantation of *aman* paddy going on briskly, except on lowlying lands which are still under water, though they are being satisfactorily drained by khals. Agricultural prospects are hopeful. No cattle-disease. Fodder and water sufficient. Common rice sells at both Sadar and Ulubaria at 11 seers per rupee.

24-Parganas.—Rainfall at Sadar 4·76, Barasat 4·45, Basirhat 4·15, Diamond Harbour 1·29. Heavy rain except in the south. State of standing crops good, but more rain still wanted Prospect fair. *Aus* and jute sown in normal area, but growth retarded considerably for want of rain. Transplantation of *aman* retarded for the same reason, its extent on 1st being—Sadar 37·5 per cent., Barasat 75 per cent., Basirhat 35 per cent., Diamond Harbour 62·5 per cent. Transplantation of *aman* continues: jute and *aus* being harvested in Barasat and Basirhat. Common rice sells at 11 seers per rupee. Condition of cattle good. Supply of fodder and water sufficient.

Nadia.—Rainfall at Sadar 4·05, Ranaghat 4·83, Chuadanga 3·78, Meherpur 2·29, Kushtia 2·98. Transplantation of *aman* in progress. Harvesting of *aus* commenced. Fodder and water sufficient. No cattle-disease reported. Common rice sells as follows:—

				Srs.	ch.	
Sadar	...	...	...	12	0	per rupee.
Ranaghat	...	...	...	11	0	
Chuadanga	...	...	...	11	0	
Meherpur	...	...	...	10	8	
Kushtia	...	...	...	11	4	

Murshidabad.—Rainfall at Sadar 6·15, Kandi 3·47, Jangipur 4·81, Lalbagh 4·76. Weather seasonable. Transplantation of *aman* being pushed on. Harvesting of *aus* going on. Prospects of jute and sugarcane good. No cattle-disease. Fodder and water sufficient. Common rice sells as follows:—

				Srs.	ch.	
Sadar	...	...	...	10	12	per rupee.
Kandi	...	...	...	12	0	
Jangipur	...	...	...	11	8	
Lalbagh	...	...	...	11	0	

Jessore.—Rainfall at Sadar 3·41, Jhenida 4·02, Narail 3·09, Bangaon 3·29, Magura 2·54. Weather seasonable. Prospects of crops good. Fodder and water sufficient. Cattle-disease reported from Kotwali thana and Salkhia outpost of Magura. Common rice sells as follows:—

	Srs.	ch.	
Sadar	11	0	per rupee.
Jhenida	12	0	
Narail	10	12	
Bangaon	12	0	
Magura	13	0	

Khulna.—Rainfall at Sadar 3·93, Bagerhat 4·65, Satkhira 6·21. Weather seasonable. Transplantation of *aman* and harvesting of *aus* continue. Prospects of *aus* fair. Fodder and water sufficient. Cattle-disease reported from Asasuni. Common rice sells as follows:—

	Srs.	ch.	
Sadar	11	5	per rupee.
Bagerhat	12	8	
Satkhira	10	8	

Rajshahi.—Rainfall at Sadar 6·01, Nator 2·05, Naugaon 1·10. Weather seasonable. Harvesting of *aus* and transplantation of winter rice continues. Prospects of crops good. Condition of cattle good. Common rice sells at 12 seers per rupee.

Dinajpur.—Rainfall at Sadar 2·10. Fall in the district general, varying from 1·59 to 4·61. Weather seasonable. Standing crops good. Steeping of jute has commenced. Transplanting of winter rice is in full swing. No cattle-disease. Fodder and drinking-water plentiful. Rice selling at 12 seers per rupee.

Jalpaiguri.—Rainfall at Sadar 4·05, Alipore Duars 2·77. Weather cloudy and hot. Transplantation of *haimanti* and harvesting of *bhadoi* paddy going on. Prospect of *haimanti* paddy favourable, that of *bhadoi* not so favourable. Common rice sells at 11¼ seers a rupee. Fodder and water sufficient. Cattle-disease reported from three thanas in Sadar subdivision.

Darjeeling.—Rainfall at Sadar 6·52, Kurseong 13·51, Siliguri 11·48. Weather seasonable. *Hills*—*Haimanti dhan* being cultivated. Maize, *chota marua* and *bhadoi dhan* doing well. *Terai*—*Haimanti* paddy being transplanted. Prospects good. Coarse rice sells as follows:—

	Srs.	ch.	
Hills	8	0	per rupee.
Terai	11	0	

Maize sells at Darjeeling and Kalimpong at 18 seers per rupee.

Rangpur.—Rainfall at Sadar 2·24. Fall general. Weather cloudy and rainy. Cutting of *aus* and jute and transplantation of *aman* going on low lands. Jute a little damaged in Nilphamari by rain. Cattle-disease still prevails in Gaibanda. Common rice sells at 11 seers per rupee.

Bogra.—Rainfall at Sadar 1·12. Fall general. Weather hot and cloudy. Cutting of *aus* and jute and transplantation of *aman* going on. Prospects good. Fodder and water sufficient. Common rice sells at 12 seers per rupee.

Pabna.—Rainfall at Sadar 1·32, Sirajganj 1·09. Fall general. Weather cloudy and rainy. *Aus* and jute are being reaped. Prospects of standing crops fair. Fodder and water sufficient. Cattle-pox at certain places. Common rice sells at 10 seers per rupee.

Dacca.—Rainfall at Sadar ·61, Manikganj 3·89, Munshiganj 1·54, Narayanganj 1·64. Prospects of crops fair. Weather seasonable. Fodder available. No cattle-disease. Common rice sells at 11 seers per rupee.

Mymensingh.—Rainfall at Sadar 0·75, Jamalpur 0·32, Kishorganj 0·69, Netrokona 5·55, Tangail 1·36. Weather seasonable. Harvesting of *aus* and jute and transplantation of winter rice continue. Jute have suffered from excess of rain and outturn will probably not exceed 50 per cent. Fodder sufficient. No cattle-disease. Common rice sells as follows:—

	Srs.	ch.	
Sadar	10	0	per rupee.
Kishorganj	11	4	
Jamalpur	13	0	
Netrokona	12	0	
Tangail	10	4	

Faridpur.—Rainfall at Sadar 3·31, Goalundo 1·37, Madaripur 3·88. Weather seasonable. State and prospects of standing crops good generally. Fodder sufficient. Common rice sells at 11 seers per rupee.

Backergunge.—Rainfall at Sadar 6·61. Fall general, lightest at Pirojpur, 4·11. Weather seasonable. Transplantation of *aman* going on. Cattle-disease at Kotwali. Matbari and Barmuddin thanas. Fodder and water sufficient. Common rice sells at 11 seers per rupee.

Tippera.—Rainfall at Sadar 1·30, Brahmanbaria 1·60, Chandpur ·96. Weather seasonable. Harvesting of *aus* and jute in progress. Flood has caused slight damage to paddy in Brahmanbaria. Fodder and water sufficient. Cattle-disease reported from Matlab thana. Common rice sells at 12 seers per rupee.

Noakhali.—Rainfall at Sadar 10·55, Feni 3·27. Fall general. Weather seasonable. Transplantation of *aman* continues. Prospects of *aus* fair. Cattle-disease reported from one thana. Fodder and water sufficient. Condition of cocoanut good. Common rice sells at Sadar at 11 seers and at Feni at 13 seers per rupee.

Chittagong.—Rainfall at Sadar 1·14, Cox's Bazar 13·41. Transplantation of *aman* crops going on. Fodder and water sufficient. Cattle-disease still reported in parts of the district. Rice sells at 12¾ seers per rupee.

Chittagong Hill Tracts.—Rainfall at Sadar 2·96. Fall general. Weather alternately fine and showery. Winter rice sowing continues. *Jooms* crops progressing. Common rice selling at 12 seers. No cattle-disease.

Patna.—Rainfall at Sadar 0·85, Barh 2·37, Bihar 1·91, Dinapore ·23, Hilsa 1·53, Bikram 2·95. Weather hot and cloudy. Paddy transplantation progressing. More rain wanted. *Bhadoi* slightly damaged. No cattle-disease. Fodder and water sufficient. Common rice sells as follows :—

	Srs.	ch.	
Patna	11	4	per rupee.
Barh	11	8	
Bihar	10	0	
Dinapore	11	12	

Gaya.—Rainfall at Sadar 3·10, Nawadah 2·71, Jahanabad 4·04, Aurangabad 6·32. Weather rainy. Transplantation of paddy commenced. *Bhadoi* and sugarcane doing well. No cattle-disease. Fodder and water ample. Average price of common rice 10 seers 5 chitaks per rupee.

Shahabad.—Rainfall at Sadar 6·20, Buxar 2·34, Bhabhua 2·89, Sasaram 19·98, Dehri 6·44. Weather seasonable. Paddy transplantation commenced. *Bhadoi* and sugarcane doing well. Fodder and water sufficient. No cattle-disease. Rice sells at Sadar at 11 seers a rupee.

Saran.—Rainfall at Sadar 1·16, Siwan 2·49, Gopalganj 1·75. Weather seasonable. Weeding of *bhadoi* and transplantation of paddy going on. Fodder and water sufficient. Sporadic cases of cattle-disease reported from Parsa and Garkha. Common rice sells at Sadar at 12 seers per rupee.

Champaran.—Rainfall at Sadar 1·33, Bettiah ·97. Weather bright and hot. Standing crops doing well. Transplantation of *aghani* paddy and weeding of *bhadoi* crops going on. No cattle-disease. Fodder and water sufficient. Common rice sells at 12½ seers and maize at 22 seers per rupee.

Muzaffarpur.—Rainfall at Sadar 2·17, Hajipur 0·94, Sitamarhi 0·24. Weather generally cloudy. Transplantation of paddy continues. Prospects of crops good. Fodder and water sufficient. Very few cases of cattle-disease in Sitamarhi subdivision. Prices are —Common rice 11½ seers and maize 20 seers a rupee.

Darbhanga.—Rainfall at Sadar 1·13, Samastipur 4·53, Madhubani 2·30. Weather hot and cloudy. Transplantation of paddy in progress. *Bhadoi* being weeded. Prospects of standing crops good. Fodder and water sufficient. Cattle-disease is reported from Warisnagar, Phulparas and Jalle police-stations. Common rice sells as follows :—

	Srs.	ch.	
Sadar	12	0	per rupee.
Samastipur	12	8	
Madhubani	11	11	

Monghyr.—Rainfall at Sadar 4·00, Begusarai 4·08, Jamui 3·10. Weather seasonable. Transplantation of *marua* and paddy going on. *Bhadoi* crops promising. Fodder and water sufficient. A few cases of cattle-disease reported from Begusarai thana. Common rice sells as follows:—

	Srs.	ch.	
Sadar	11	4	per rupee.
Begusarai	11	0	
Jamui	11	0	

Bhagalpur.—Rainfall at Sadar 2·34, Banka 3·14, Madhipura 3·51, Supaul 3·98. Weather seasonable. Prospects good everywhere. Recent rainfalls have done immense

good. Transplantation of paddy briskly going on. Sporadic cases of cattle-disease reported. Fodder and water sufficient. Common rice sells as follows:—

		Srs.	ch.	
Sadar	... ...	11	6	per rupee.
Banka	... ...	11	14	
Madhipura	... ...	13	0	
Supaul	... ...	13	0	

Purnea.—Rainfall at Sadar 1·35, Kishanganj 5·47, Araria 2·36. Fall general and good except at Sadar, where more rain is wanted. Prospects on the whole good. No cattle-disease. Fodder and water sufficient. Common rice sells as follows:—

		Srs.	ch.	
Sadar	... ...	10	0	per rupee.
Kishanganj	... ...	11	0	
Araria	... ...	11	8	

Malda.—Rainfall at Sadar 2·99, Sibganj 3·73, Gajol 1·87. Weather hot with occasional rain. Harvesting of *bhadoi* in progress. Transplantation of winter rice estimated at 50 per cent. Cutting of jute commenced in places. Prospects good. No cattle-disease. Fodder and water sufficient except in parts of old Malda thana. Common rice sells at 11 seers per rupee.

Sonthal Parganas.—Rainfall at Sadar 3·70, Deoghur 4·26, Godda 5·37, Jamtara 4·79, Pakaur 3·99, Rajmahal 1·16. Weather hot and cloudy with occasional showers. Transplantation of winter rice is going on. Prospects of standing crops favourable. Fodder and water sufficient. Common rice sells in Sadar at 11¼ seers per rupee. No cattle-disease.

Cuttack.—Rainfall at Sadar 3·48. Fall general. Weather of usual monsoon character. Harrowing of *beali* and reploughing and transplantation of *sarad* in progress. *Beali* in ears in parts. Prospects good. No cattle-disease. Fodder and water sufficient. Common rice sells at 13 seers 2 chitaks at Sadar.

Balasore.—Rainfall at Sadar 4·20. Fall general. Weeding and transplantation continue. Prospects good. Sugarcane, oilseeds, jute and cotton thriving. Rice sells at 13 and 15 seers per rupee at Sadar and Bhadrak respectively. Fodder and water ample. No cattle-disease. No damage by flood reported so far, but possibly Bograi pargana has suffered somewhat.

Angul.—Rainfall at Sadar 4·77, Chhendipada 4·22, Bissipara 4·99. Weather cloudy. Puddling and transplantation going on. Common rice sells at 12 and 11¼ seers at Sadar and Khondmals respectively.

Puri.—Rainfall at Sadar 2·22, Khurda 4·03. Weather seasonable. Rainfall throughout the district. *Bhadoi* and *laghu sarad* paddy in good progress. Sugarcane and cotton growing well. Fodder and water-supply sufficient. Cattle-disease reported from all parts of district. Rice sells at 14 seers 7 chitaks per rupee.

Hazaribagh.—Rainfall at Sadar 3·38, Giridih 5·03. Fall general. Weather seasonable. Transplanting of paddy going on. Sugarcane doing well. Fodder and water sufficient. Common rice sells at 11¼ seers per rupee.

Ranchi.—Rainfall at Sadar 1·21. Fall general. Weather seasonable. Prospects of crops good. Transplantation of paddy in progress. Cattle-disease reported from several thanas. Fodder and water sufficient. Common rice sells at 14 seers per rupee.

Palamau.—Rainfall at Sadar 0·32. Rainfall general. Weather seasonable. Transplantation of *murua* still continues. *Bhadoi* paddy being sown. Paddy transplantation commenced in places. Standing crops are good. Fodder and water sufficient. Price of rice at Sadar is 10 seers 2 chitaks per rupee.

Manbhum.—Rainfall at Sadar 2·92, Gobindpur 2·73. Weather seasonable. Prospects of standing crops good. Transplantation of winter rice still in progress. Fodder and water sufficient. Cattle-disease reported from thana Topchanchi. Average price of common rice is at Sadar 11¼, seers and at Gobindpur 10 seers 14 chitaks per rupee.

Chaibassa.—Rainfall 1·51. Transplantation in progress. Young paddy promising. Average price of rice is 13¼ seers in the district; at Chaibassa 11 seers per rupee.

General Summary.—The rainfall during the week was general and at places heavy. More rain is still needed in the districts of Bankura, 24-Parganas and Patna. Transplantation of winter rice and harvesting of early rice and jute continue. Autumn crops and sugarcane doing well. Prospects fair. Cattle disease reported from 16 districts. No want of fodder or water. The price of common rice has risen in 7 districts, fallen in 13, and is stationary in the rest (27).

By order of the Lieutenant-Governor of Bengal,

W. C. MACPHERSON,
Offg. Secretary to the Govt. of Bengal.

REVENUE DEPARTMENT,
The 5th August 1902.

PRICES-CURRENT (retail) of Food-grains and Salt in the Head-

Number.	DISTRICTS.	QUANTITIES PER RUPEE IN											
		WHEAT.			BARLEY.			RICE, COMMON.			JOWAR OR CHOLUM (*Sorghum Vulgare*).		
		Present return.	Next preceding return.	Corresponding return of last year.	Present return.	Next preceding return.	Corresponding return of last year.	Present return.	Next preceding return.	Corresponding return of last year.	Present return.	Next preceding return.	Corresponding return of last year.
	BENGAL.	S. Ch.	S. Ch.	S. Ch.	S. Ch.	S. Ch.	S. Ch.	S. Ch.	S. Ch.	S. Ch.	S. Ch.	S. Ch.	S. Ch.
BURDWAN DIVISION.													
1	Burdwan ...	14 0	13 0	11 8	...	...	...	10 8	11 10	11 4	...	...	...
2	Birbhum ...	12 0	12 0	12 0	...	...	...	12 0	11 4	11 4	...	...	...
3	Bankura ...	12 0	11 0	11 0	...	...	...	12 3	13 0	11 14	...	...	...
4	Midnapore ...	10 0	10 0	9 0	...	...	...	12 0	12 8	10 10	...	...	...
5	Hooghly ...	10 0	10 0	10 0	...	...	...	9 4	9 0	9 4	...	...	...
6	Howrah ...	...	...	...	...	...	...	10 8	10 8	10 0	...	...	...
PRESIDENCY DIVISION.													
7	24-Parganas ...	...	...	...	...	...	...	10 8	10 0	9 8	...	...	...
8	Calcutta ...	10 0	10 0	10 10	14 8	14 8	16 0	10 0	10 0	9 10	12 4	12 4	17 12
9	Nadia ...	15 8	14 9	14 0	17 0	20 0	...	11 0	11 6	11 7	...	...	...
10	Murshidabad ...	16 0	16 0	13 0	21 0	21 0	20 0	11 4	11 8	11 12	...	...	...
11	Jessore ...	10 0	10 0	12 0	10 0	10 0	9 2	11 12	12 0	11 14	...	...	...
12	Khulna ...	...	...	...	...	...	...	11 10	11 10	10 12	...	...	...
RAJSHAHI DIVISION.													
13	Rajshahi ...	16 8	16 8	13 8	21 0	21 0	21 0	11 4	10 14	11 4	...	...	...
14	Dinajpur ...	12-14-2 f.	12-9-3 f.	12 0	...	...	21 0	12 0	11-6-2 f.	10 12	...	...	...
15	Jalpaiguri ...	11 0	11 0	10 0	...	...	...	10 12	10 12	10 8	...	...	...
16	Darjeeling ...	...	...	...	...	...	...	9 8	9 8	9 0	...	...	...
17	Rangpur ...	10 8	10 8	9 0	...	...	...	11 0	11 0	8 0	...	...	...
18	Bogra ...	10 8	10 8	14 4	...	...	...	11 4	11 4	11 4	...	...	...
19	Pabna ...	15 12	15 12	15 0	26 4	26 4	22 8	11 4	11 4	10 8	...	...	...
DACCA DIVISION.													
20	Dacca ...	11 13	12 8	10 10	18 0	18 0	16 0	11 0	11 0	9 13	...	...	...
21	Mymensingh ...	12 0	12 0	9 8	13 0	13 0	11 0	11 0	11 0	8 8	...	...	...
22	Faridpur ...	16 8	16 13	11 8	22 0	22 0	14 8	12 0	12 8	11 0	...	...	...
23	Backergunge ...	...	...	...	...	...	...	10 8	10 8	9 0	...	...	...

A. In the subdivisions the retail prices of salt per rupee are—Kalna 11 seers 3 chitaks; Katwa 11 seers 12 chitaks; Raniganj 10½ seers.
B. At Rampur Hát the retail price of salt is 11¼ seers per rupee.
C. At Vishnupur the retail price of salt is 9½ seers per rupee.
D. In the subdivisions the retail prices of salt per rupee are—Contai 10 seers; Tamluk return not received; Ghatal 11 seers 8 chitaks.
E. In the subdivisions the retail prices of salt per rupee are—Serampore 10½ seers; Arambagh 10 seers 10 chitaks.
F. At Ulubaria the retail price of salt is 10 seers 10½ chitaks per rupee.
G. In the marts in the interior of the district the retail prices of salt per rupee are—Chetla 10 seers 10 chitaks; Barasat 11 seers; Baduria 11 seers; Moraghat 9 seers 13½ chitaks.
H. In the subdivisions the retail prices of salt per rupee are—Kushtia 10 seers; Chuadanga 10 seers 14 chitaks (panga; Meherpur 10 seers (karkatoh); Kunaghat 11 seers 4 chitaks (crushed).
I. In the subdivisions the retail prices of salt per rupee are—Lalbagh 11 seers; Kandi return not received; Jangipur 11 seers.

quarters Station Bazars of the Districts of Bengal on the 31st July 1902.

WHOLESALE PRICES PER MAUND OF 40 SEERS. — SALT. Present return.	SALT. Next preceding return.	SALT. Corresponding return of last year.	SALT. Present return.	SALT. Next preceding return.	SALT. Corresponding return of last year.	AVERAGE WAGES PER MONTH. — UNSKILLED LABOUR—ABLE-BODIED AGRICULTURAL LABOURER. Present return.	UNSKILLED LABOUR—ABLE-BODIED AGRICULTURAL LABOURER. Next preceding return.	UNSKILLED LABOUR—ABLE-BODIED AGRICULTURAL LABOURER. Corresponding return of last year.	SYCE OR HORSE-KEEPER. Present return.	SYCE OR HORSE-KEEPER. Next preceding return.	SYCE OR HORSE-KEEPER. Corresponding return of last year.	SKILLED LABOUR—COMMON MASON, CARPENTER OR BLACKSMITH. Present return.	SKILLED LABOUR—COMMON MASON, CARPENTER OR BLACKSMITH. Next preceding return.	SKILLED LABOUR—COMMON MASON, CARPENTER OR BLACKSMITH. Corresponding return of last year.	DISTRICTS.	Number.	
S. Ch.	S. Ch.	S. Ch.	Rs. A. P.	Rs. A. P.	Rs. A. P.	Rs. A.	Rs. A.	Rs. A.	Rs. A.	Rs. A.	Rs. A.	Rs. A.	Rs. A.	Rs. A.	BENGAL.		
A 11 4	11 4	10 8	Crushed 3 4 0	3 4 0	3 10 0	9 8	7 8	7 8 to 10 0	6 0	7 0	6 0 to 8 0	15 0	15 0	15 0	Burdwan.	1	Burdwan Division.
B 11 6	10 8	10 8	3 8 0	3 12 0	3 10 6	6 0 to 7 8	6 0 to 7 8	6 0 to 7 8	4 0 to 6 0	4 0 to 6 0	4 0 to 6 0	12 0 to 15 0	7 8 to 15 0	7 8 to 12 0	Birbhum	2	
C 10 8	11 4	10 0	Panga. 3 12 0	3 8 0	3 15 0	6 0 to 7 8	6 0 to 7 8	6 0 to 7 8	5 0 to 7 8	5 0 to 7 8	5 0 to 7 8	8 0 to 12 0	8 0 to 12 0	8 0 to 12 0	Bankura	3	
D 10 8	10 8	10 0	Panga. 3 8 0	3 8 0	3 12 0	8 8	8 8	8 8	7 8	7 8	7 8	12 0 to 18 0	12 0 to 18 0	12 0 to 18 0	Midnapore.	4	
E 10 8	10 8	10 0	3 12 0	3 12 0	3 12 0	10 0	10 0	10 0	8 0	7 0	8 0	12 0 to 15 0	10 0 to 20 0	15 0 to 30 0	Hooghly.	5	
F 10 8	10 8	10 4	3 12 0	3 12 0	3 11 0	10 8	10 8	10 0 to 12 0	8 0	8 0	10 0 to 12 0	13 0	15 0	20 0 to 30 0	Howrah.	6	
G 10 10	10 10	10 11	Panga. 3 4 6	3 4 9	3 9 0	8 0 to 10 0	10 0	8 0 to 10 0	7 0 to 8 0	8 0	7 0 to 8 0	12 0 to 20 0	15 0 to 25 0	12 0 to 20 0	24-Parganas.	7	Presidency Division.
11 0	11 0	11 0	Panga. 3 6 0	3 6 0	3 8 0	9 0	8 8	9 0	9 0	8 0	8 0	18 0 to 20 0	18 0 to 20 0	18 0 to 22 0	Calcutta.	8	
H 12 4	12 4	11 0	Panga. 3 4 0	3 4 0	3 10 0	9 6	7 8	7 8	7 0	6 0	7 0	12 0 to 15 0	10 0 to 15 0	10 0 to 20 0	Nadia.	9	
I 11 0	11 0	11 0	3 6 6	3 6 6	3 7 0	6 0	5 8	5 0 to 6 0	5 0 to 6 0	5 0 to 6 0	5 0 to 6 0	14 0 to 16 0	14 0 to 16 0	14 0 to 15 0	Murshidabad.	10	
J 9 8	10 0	9 2	3 12 0	3 14 0	4 0 0	9 6	10 0	9 6	7 0	7 8	7 0	10 0 to 15 0	15 0 to 19 0	15 0 to 18 0	Jessore.	11	
K 10 0	10 0	10 0	3 12 0	3 12 0	3 12 0	9 6 to 11 0	9 6 to 11 0	9 6 to 11 0	7 0 to 9 0	7 0 to 10 0	7 0 to 10 0	10 0 to 28 0	10 0 to 28 0	10 0 to 28 0	Khulna.	12	
L 10 5	10 5	9 12	3 13 4	3 13 4	4 0 0	7 8	7 8	7 8	6 8	6 0	6 0	7 0 to 15 0	7 0 to 15 0	7 0 to 15 0	Rajshahi.	13	Rajshahi Division.
M 10 8	10 8	10 0	Panga. 3 12 0	3 12 0	4 0 0	7 0	7 0	7 0	6 0	6 0	6 0	12 0 to 22 0	12 0 to 22 0	12 0 to 22 0	Dinajpur.	14	
N 10 0	10 0	9 8	Panga. 3 11 0	3 11 0	3 14 0	7 8	7 8	7 8	8 0	8 0	8 8	15 0 to 20 0	15 0 to 20 0	15 0 to 20 0	Jalpaiguri.	15	
O 8 8	8 8	8 0	4 9 0	4 9 0	4 12 0	7 0 to 10 0	7 0 to 10 0	7 0 to 10 0	8 0 to 10 0	8 0 to 10 0	8 0 to 11 0	12 0 to 20 0	12 0 to 25 0	12 0 to 25 0	Darjeeling.	16	
8 0	8 8	8 0	4 12 0	4 10 0	4 12 0												
P 10 8	10 8	9 0	Panga. 3 12 0	3 12 0	4 0 0	9 0	7 8	9 0	7 0	7 8	7 0	15 0	15 0	15 0	Rangpur.	17	
10 8	10 2	10 2	3 10 8	3 12 0	3 14 0	7 8	7 8	7 8	5 0 to 8 0	5 0 to 8 0	5 0 to 8 0	10 0 to 20 0	10 0 to 20 0	10 0 to 20 0	Bogra.	18	
Q 10 8	10 8	9 12	Panga. 3 12 0	3 12 0	3 14 0	8 0 to 10 0	5 0 to 7 8	5 0 to 8 0	6 to 8	6 0 to 8 0	6 0 to 8 0	10 to 20	7 0 to 20 0	7 8 to 20 0	Pabna.	19	
R 11 0	10 8	10 0	Panga. 3 10 0	3 12 0	3 14 0	5 0 to 7 0	6 0 to 7 8	5 0 to 7 0	6 0 to 9 0	6 0 to 9 0	6 0 to 9 0	9 0 to 18 0	9 0 to 18 0	9 0 to 18 0	Dacca.	20	Dacca Division.
S 10 0	10 0	9 8	Panga. 3 12 0	3 12 0	4 3 0	7 0	7 0	8 0	8 0	8 0	8 0	11 0 to 15 0	12 0 to 14 0	12 0 to 14 0	Mymensingh.	21	
T 10 10	10 10	10 0	3 12 0	3 12 0	4 0 0	10 0	11 4 to 13 2	7 8 to 13 2	8 0	8 0 to 10 0	8 0 to 10 0	15 0	15 0 to 20 0	15 0 to 20 0	Faridpur.	22	
10 0	10 0	10 0	Panga. 3 10 0	3 10 0	3 10 0	10 0 to 12 0	8 0	8 0 to 15 0	8 0 to 12 0	8 0	7 8 to 8 0	15 0 to 15 0	12 0 to 15 0	12 0 to 20 0	Backergunge.	23	

J. In the subdivisions the retail prices of salt per rupee are—Jhenida 10 seers; Magura 9¾ seers; Narail 10 seers; Bangaon 10 seers 10 chitaks.
K. In the subdivisions the retail prices of salt per rupee are—Bagerhat 10 seers; Satkhira 11 seers.
L. In the subdivisions the retail prices of salt per rupee are—Nator 10 seers 8 chitaks; Naugaon 9¾ seers.
M. No report from subdivision.
N. At Alipur Duars the retail price of salt is 8 seers per rupee.
O. The retail price of salt (panga) at Kurseong is 8 seers per rupee; Siliguri 9 seers.
P. In the subdivisions the retail prices of salt per rupee are—Gaibanda 10 seers; Kurigram 8 seers; Nilphamari 10 seers.
Q. At Sirajganj the retail price of salt is 11 seers 6 chitaks per rupee.
R. In the marts in the interior of the district the retail prices of salt per rupee are—Madanganj 11 seers 13 chitaks, Manikganj 9 seers; Mirkadim 11 seers 6 chitaks.
S. In the subdivisions the retail price of salt per rupee are—Kishorganj 10 seers 11 chitaks; Jamalpur 10 seers 5 chitaks; Tangail 9 seers; Netrokona 10 seers.
T. In the subdivisions the retail prices of salt per rupee are—Goalundo 10 seers; Madaripur 10¼ seers (crushed).
U. In the subdivisions the retail prices of salt per rupee are—Pirojpur 10 seers; Patuakhali 9 seers; Bhola 10 seers.

PRICES-CURRENT (retail) of Food-grains and Salt in the Head-quarters

Number.	DISTRICTS.	QUANTITIES PER RUPEE IN											
		WHEAT.			BARLEY.			RICE, COMMON.			JOWAR OR CHOLUM (*Sorghum Vulgare*).		
		Present return.	Next preceding return.	Corresponding return of last year.	Present return.	Next preceding return.	Corresponding return of last year.	Present return.	Next preceding return.	Corresponding return of last year.	Present return.	Next preceding return.	Corresponding return of last year.
BENGAL—*concluded.*		S. Ch.	S. Ch.	S. Ch.	S. Ch.	S. Ch.	S. Ch.	S. Ch.	S. Ch.	S. Ch.	S. Ch.	S. Ch.	S. Ch.
CHITTAGONG DIVISION.													
24	Tippera ..	...	...	...	...	...	...	12 0	11 0	8 13	...	...	...
25	Noakhali ...	...	...	..	...	...	...	11 0	10 0	9 8	...	...	...
26	Chittagong ...	...	...	..	...	...	..	12 14	12 10	12 12	..	...	...
BIHAR.													
PATNA DIVISION.													
27	Patna	14 0	14 0	13 8	19 0	19 8	19 0	11 4	10 8	12 8	*White* 16 0 *Raksa* 24 0	*White* 14 0 *Raksa* 21 0	17 0
28	Gaya ...	13 4	13 4	11 12	17 4	17 0	16 8	10 12	10 12	10 12	15 0	18 0	15 8
29	Shahabad	13 0	13 0	12 0	16 0	16 0	15 0	11 0	11 0	10 0	...	...	...
30	Saran ...	15 0	15 0	12 8	19 0	18 0	17 0	11 8	12 0	10 8	...	..	...
31	Champaran ...	13 0	13 0 to 13 8	12 12	22 0	22 0 to 23 0	21 0	12 8	12 0	12 0	...	..	...
32	Muzaffarpur ..	13 8	14 0	11 0	19 0	19 0	18 0	11 8	11 8	11 0	...	...	...
33	Darbhanga	14 4	13 14	13 8	19 12	19 12	20 14	12 0	12 0	12 0	...	...	...
BHAGALPUR DIVISION.													
34	Monghyr ...	14 8	14 8	14 11	20 0	20 0	19 6	10 0	10 0	11 8	...	...	...
35	Bhagalpur .	13 14	14 0	13 2	19 0	19 0	15 0	12 0	12 0	12 10	...	...	...
36	Purnea ...	12 0	12 0	16 0	...	...	...	9 0	10 0	12 0	...	...	...
37	Malda ..	16 0	16 8	13 0	...	...	...	11 0	11 0	11 0	...	...	...
38	Santhal Parganas.	11 8	10 8	11 0	15 0	15 0	14 0	11 12	13 0	13 0	...	...	...
ORISSA.													
ORISSA DIVISION.													
39	Cuttack ...	12 7	12 7	11 2	...	...	...	13 2	13 2	12 7	...	...	...
40	Balasore ...	14 0	16 0	12 0	11 0	11 0	...	13 0	13 0	11 0	...	...	...
41	Angul ...	...	...	...	...	...	...	12 0	12 0	...	...	...	...
42	Puri	11 0	11 0	10 8	...	...	...	14 7	13 2	13 2	...	...	...
CHOTA NAGPUR.													
CHOTA NAGPUR DIVISION.													
43	Hazaribagh ...	11 0	11 0	10 0	14 8	16 0	14 8	11 0	11 4	11 4	...	...	...
44	Ranchi ...	7 4 to 10 0	7 4 to 10 0	8 0 to 10 0	14 0	14 0	14 0	14 0	12 12	13 4	...	...	...
45	Palamau ..	10 2	11 4	9 9	14 10	13 8	12 6	10 2	10 2	9 9	...	...	...
46	Manbhum ...	13 0	12 0	11 0	14 0	16 0	16 0	12 0	12 8	11 0	20 0	22 0	...
47	Singhbhum ...	11 0	11 0	10 0	...	...	...	12 0	13 0	13 0	...	...	...

V. In the subdivisions the retail prices of salt per rupee are—Chandpur 9 seers ; Brahmanbaria 10 seers.
W. At Feni the retail price of salt is 9 seers per rupee.
X. Return from Cox's Bazar not received.
Y. In the subdivisions the retail prices of salt per rupee are—Barh return not received ; Dinapore 10½ seers ; Bihar 10 seers, 11 seers.
Z. In the subdivisions the retail prices of salt per rupee are—Jahanabad 10 seers ; Nawada 10 seers ; Aurangabad 11 seers.
a. In the subdivisions the retail prices of salt per rupee are—Buxar 11 seers ; Bhabua 10¾ seers ; Sasaram 10¾ seers.
b. In the subdivisions the retail prices of salt per rupee are—Siwan 11 seers 6 chitaks ; Gopalganj (Mirganj) 12 seers 2 chitaks.
c. At Bettiah the retail price of salt is 10½ seers per rupee.
d. In the subdivisions the retail prices of salt per rupee are—Hajipur 10½ seers ; Sitamarhi 11 seers.
e. In the subdivisions the retail prices of salt per rupee are—Samastipur return not received ; Madhubani 10 seers 6 chitaks.
f. In the subdivisions the retail prices of salt per rupee are—Begusarai 10½ seers ; Jamui 10 seers 8 chitaks.

CALCUTTA,
The 2nd August 1902.

Station Bazars of the Districts of Bengal on the 31st July 1902—concld.

Salt.			Wholesale prices per maund of 40 seers.			Average wages per month.									DISTRICTS.	Number.	
			Salt.			Unskilled labour—Able-bodied agricultural labourer.			Syce or horse-keeper.			Skilled labour—Common mason, carpenter or blacksmith.					
Present return.	Next preceding return.	Corresponding return of last year.	Present return.	Next preceding return.	Corresponding return of last year.	Present return.	Next preceding return.	Corresponding return of last year.	Present return.	Next preceding return.	Corresponding return of last year.	Present return.	Next preceding return.	Corresponding return of last year.			
S. Ch.	S. Ch.	S. Ch	Rs A. P.	Rs A. P	Rs. A. P.	Rs. A.	Rs. A.	Rs. A.	Rs. A.	Rs. A.	Rs. A.	Rs. A	Rs. A.	Rs. A	BENGAL—*concluded*		
V 9 0	10 0	9 0	3 12 0	3 14 0	4 8 0	8 0	8 0	8 0	7 0 to 8 0	7 0 to 8 0	7 0 to 9 0	15 0	15 0	12 0 to 25 0	Tippera.	24	Chittagong Division.
W 9 0	9 0	9 0	1 2 0	4 2 0	4 8 0	9 6	10 12	7 8	7 0 to 8 0	7 0 to 8 0	7 0 to 8 0	10 0 to 15 0	15 0 to 20 0	10 0 to 15 0	Noakhali.	25	
X 10 0	10 0	9 8	3 6 0	3 8 0	4 1 0	8 0 to 10 0	7 0 to 10 0	8 0 to 10 0	7 0 to 9 0	7 0 to 9 0	7 0 to 9 0	10 0 to 15 0	10 0 to 15 0	10 0 to 15 0	Chittagong.	26	
Y 10 12	10 12	10 8	Panga. 3 10 0	3 10 0	3 12 0	4 0 to 5 0	4 0 to 5 0	4 0 to 5 0	4 8 to 5 0	4 8 to 5 0	4 8 to 5 0	6 0 to 7 0	6 0 to 7 0	6 0 to 7 0	BIHAR. Patna.	27	Patna Division.
Z 11 0	11 0	10 0	3 9 0	3 9 6	3 14 0	4 0 to 5 0	3 8 to 5 0	3 8 to 5 0	4 0 to 5 0	3 0 to 5 0	3 0 to 5 0	6 0 to 12 0	6 0 to 12 0	6 0 to 12 0	Gaya.	28	
a 10 0	10 0	10 0	4 0 0	4 0 0	4 0 0	4 11	4 11	4 11	4 0	5 8 to 6 0	5 8 to 6 0	7 8 to 9 6	5 8 to 9 6	7 8 to 9 6	Shahabad.	29	
b 11 8	11 0	10	Panga. 0,3 11 0	3 10 0	4 0 0	3 12 to 5 10	3 12 to 5 10	3 12 to 5 10	4 0 to 10 0	5 0 to 8 0	4 0 to 10 0	7 8 to 10 0	7 8 to 11 4	7 8 to 10 0	Saran.	30	
c 10 8	10 8	10 0	3 13 0	3 13 0	4 0 0	4 0	4 0	4 0	4 0	4 0	4 0	6 0	6 0	6 0	Champaran.	31	
d 10 0	10 0	9 12	4 0 0	4 0 0	4 0 0	3 0 to 4 0	3 0 to 4 0	3 0 to 4 0	3 0 to 4 0	3 0 to 4 0	3 0 to 4 0	7 0 to 8 0	6 0 to 8 0	7 0 to 8 0	Muzaffarpur	32	
e 11 0	10 0	11 0	3 10 0	3 10 0	3 10 0	3 12 to 5 0	3 12 to 5 0	3 12 to 5 0	3 0 to 5 0	3 0 to 5 0	3 0 to 5 0	5 10 to 12 0	5 0 to 12 0	3 12 to 12 0	Darbhanga	33	
f 10 8	10 8	10 8	3 12 0	3 6 6	3 6 6	4 0 to 6 0	4 0 to 5 0	7 8	4 0 to 5 0	4 0 to 6 0	4 0 to 6 0	8 0 to 10 0	8 0 to 10 0	10 0 to 12 0	Monghyr	34	Bhagalpur Division.
g 10 12	10 12	10	Panga. 4 3 10 0	3 10 0	3 14 6	6 8	6 8	5 10	5 0	5 0	5 0 to 10 0	6 0 to 10 0	6 0 to 10 0	7 8 to 12 0	Bhagalpur.	35	
h 10 0	10 0	9	Panga. 8 3 14 0	3 14 0	...	4 11 to 7 8	4 11 to 7 8	5 11 to 7 8	4 0 to 6 0	4 0 to 6 0	4 0 to 6 0	12 0 to 15 0	12 0 to 15 0	12 0 to 15 0	Purnea.	36	
i 10 0	10 0	9 8	3 14 0	3 14 0	4 0 0	7 0	7 0	6 0 to 7 0	6 0	6 0	6 0	10 0 to 15 0	10 0 to 15 0	10 0 to 15 0	Malda.	37	
9 8	9 8	9 0	4 0 0	4 2 0	4 2 0												
j 10 8	10 8	10 0	Karkatch. 3 10 0	3 10 0	3 12 0	3 12 to 4 12	3 12 to 4 8	3 12 to 4 8	5 0 to 6 0	4 0 to 6 0	4 0 to 6 0	7 8 to 15 0	7 8 to 15 0	7 8 to 15 0	Santhal Parganas.	38	
k 11 0	13 0	12 0	Karkatch. 3 4 0	3 0 0	3 0 0	5 10	5 10	5 10	5 0	5 0	5 0	7 8 to 18 12	7 8 to 18 12	7 8 to 18 12	ORISSA. Cuttack.	39	Orissa Division.
l 11 0	11 0	10 8	3 7 6	3 7 6	3 13 0	5 0 to 6 0	4 11 to 5 0	5 0 to 6 9	4 0 to 8 0	4 0 to 5 0	4 6 to 7 0	9 0 to 11 0	11 4	9 6 to 15 0	Balasore.	40	
m 8 0	8 0	...	...	...	...	3 12	4 13½	...	3 0 to 5 0	3 0 to 4 0	...	7 8 to 11 4	11 10 to 15 8	...	Angul.	41	
n 13 4	11 13	13 8	3 0 0	3 4 0	2 15 0	6 0	6 0	4 0	6 0	6 0	6 0	9 0 to 11 0	9 0 to 11 0	7 8 to 10 0	Puri	42	
8 8	8 0	9 0	Panga. 4 7 0	4 4 0	4 5 0	5 0 to 6 0	4 0 to 5 0	4 0 to 5 0	5 0 to 7 0	5 0 to 7 0	5 0 to 7 0	7 0 to 12 0	6 0 to 12 0	6 0 to 12 0	CHOTA NAGPUR. Hazaribagh.	43	Chota Nagpur Division.
9 12	9 8	9 0	Panga. 4 2 0	4 2 0	4 6 0	4 0	3 0	4 0	5 0	5 0	5 0	8 0	8 0	8 0	Ranchi.	44	
9 9	9 9	8 7	...	...	...	6 1½	6 1½	6 1½	4 0 to 5 0	4 0 to 5 0	4 0 to 5 0	7 8 to 12 0	10 0 to 12 0	7 8 to 9 0	Palamau.	45	
o 10 0	10 0	10 0	Panga. 3 10 0	3 12 0	3 10 0	5 10	2 13 to 5 10	5 0 to 6 0	6 0	5 0 to 8 0	6 0	11 4 to 13 12	10 0 to 15 0	11 4 to 15 0	Manbhum.	46	
9 0	9 0	9 0	4 4 0	4 4 0	3 8 0	4 0	4 0	4 0	5 0	7 0	5 0	12 0 to 15 0	12 0	12 0	Singbhum.	47	

g. In the subdivisions the retail prices of salt per rupee are—Banka 10 seers; Madhipura 10 seers; Supaul 10 seers.
h. In the subdivisions the retail prices of salt per rupee are—Kishanganj 9 seers; Arraria 9 seers.
i. At Balia Nawabganj the retail price of salt is 10 seers per rupee.
j. In the subdivisions the retail prices of salt per rupee are—Deoghur 10 seers (panga); Godda 10 seers; Jamtara 11 seers; Pakaur 11 seers (karkatch); Rajmahal 11 seers.
k. In the subdivisions the retail prices of salt per rupee are—Jajpur 10 seers (panga); Kendrapara 10 seers (panga).
l. At Bhadrak the retail price of salt is 10½ seers per rupee.
m. In the marts in the interior of the district the retail prices of salt per rupee are—Sankhpur 9 seers; Rissipara 9 seers.
n. At Khurda the retail price of salt is 13 seers per rupee.
o. At Gobindpur the retail price of salt is 10 seers 10 chitaks per rupee.

Published for general information.

W. C. MACPHERSON,

Offg. Secretary to the Govt. of Bengal.

PRICES-CURRENT (*wholesale*) *of Food-grains, Firewood, &c.,*

Number.	Marts	Rice (best sort).			Common rice (*mota chaul*).			Wheat (*Triticum sativum*).			Barley (*Hordeum vulgare*).		
		Present return.	Next preceding return.	Corresponding return of last year.	Present return.	Next preceding return.	Corresponding return of last year.	Present return.	Next preceding return.	Corresponding return of last year.	Present return.	Next preceding return.	Corresponding return of last year.
1	2	3	4	5	6	7	8	9	10	11	12	13	14
		Rs. A. P.	Rs. A. P.	Rs. A. P.	Rs. A. P.	Rs. A. P.	Rs. A. P.	Rs. A. P.	Rs. A. P.	Rs. A. P.	Rs. A. P.	Rs. A. P.	Rs. A. P.
1	Calcutta ...	5 4 0	5 4 0	5 0 0	3 12 0	3 12 0	4 0 0	3 12 0	3 12 0	3 3 0	2 8 0	2 8 0	2 6 0
2	Burdwan ...	5 0 0	4 7 0	4 12 0	3 12 0	3 6 0	3 8 0	...	...	...	...	...	...
3	Midnapore ..	4 0 0	4 0 0	4 4 0	3 5 0	3 2 0	3 6 0	...	...	...	...	...	...
4	Patna ..	6 10 0	6 10 0	6 2 0	3 10 9	3 8 6	3 12 6	2 8 6	2 8 6	2 10 6	...	...	...
5	Rangpur ...	5 0 0	5 0 0	6 8 0	3 8 0	3 8 0	4 4 0	3 12 0	3 12 0	4 0 0	...	...	...
6	Dacca ..	4 4 0	4 4 0	4 10 0	3 8 0	3 8 0	4 0 0	3 6 0	3 0 0	3 8 0	2 2 0	2 0 0	2 8 0
7	Chittagong .	...	...	...	3 4 0	3 6 0	3 4 0	...	...	...	...	...	...
8	Patna ..	3 11 0	4 2 6	4 5 6	3 9 0	3 13 0	3 3 0	2 12 0	2 13 6	2 15 0	2 1 0	2 0 0	2 1
9	Muzaffarpur ...	5 0 0	5 0 0	4 7 0	3 5 3	3 5 3	3 5 3	2 13 9	2 12 0	3 5 3	2 0 0	2 0 0	2 1
10	Bhagalpur ..	4 3 0	4 4 0	3 15 0	3 8 0	3 8 0	3 2 6	2 14 0	2 14 0	3 1 0	2 0 6	2 1 6	2 1
11	Cuttack ...	4 4 0	4 3 0	3 15 0	2 13 0	2 13 0	3 0 0	3 0 0	3 0 0	3 6 0	...	...	...
12	Ranchi ...	4 10 9	4 10 9	4 8 0	2 13 6	3 2 2	3 0 0	4 0 0 to 5 8 0	4 0 0 to 5 8 0	3 10 0 to 5 0 0	2 13 6	2 13 6	2 13 9

CALCUTTA,

The 4th August 1902.

Juar or cholum (*Sorghum vulgare*).			Bajra or cumbu (*Pennisetum typhoideum*).			Marua or ragi (*Eleusine coracana*).			Gram, Chana, Chola, Kadalay, or Sunaga (*Cicer arietinum*)		
Present return.	Next preceding return.	Corresponding return of last year	Present return.	Next preceding return.	Corresponding return of last year.	Present return.	Next preceding return.	Corresponding return of last year.	Present return.	Next preceding return.	Corresponding return of last year.
15	16	17	18	19	20	21	22	23	24	25	26
Rs. A. P.	Rs. A. P.	Rs A P.	Rs. A. P.	Rs. A. P.	Rs. A. P.	Rs. A. P.	Rs. A. P.	Rs. A. P.	Rs. A. P.	Rs. A. P.	Rs A. P.
0 0 0	3 0 0	2 4 0	3 0 0	3 0 0	4 0 0	...	...	...	2 12 0	2 12 0	3 0 0
...	...	...	...	...	...	...	...	...	2 8 0	2 7 0	3 0 0
...	...	...	...	...	...	...	...	...	2 10 0	2 10 0	3 0 0
...	...	...	...	...	...	...	...	...	2 10 6	2 10 6	3 5 0
...	...	...	...	...	...	...	...	...	2 6 0	2 6 0	3 4 0
...	...	...	...	...	...	...	...	...	3 12 0	3 8 0	3 8 0
...	...	...	...	...	...	...	...	...	3 4 0	3 10 0	3 8 0
White. 2 7 0	2 13 6	2 5 0	...	...	...	...	...	...	2 0 0	1 15 6	2 10 0
Raksa. 1 10 0	1 14 0										
...	...	...	...	...	...	1 13 0	1 13 0	...	2 0 0	2 0 0	2 9 3
...	...	...	...	...	...	...	...	...	2 4 0	2 4 0	2 10 0
...	...	...	...	...	...	...	...	...	2 7 0	Biri or kalai. 2 7 0	2 13 0
...	...	...	...	...	...	...	...	...	2 13 6 to 3 0 0	3 0 0 to 3 1 6	3 5 3 to 3 10 0

Indian-corn or maize (*Zea mays*).			Arhar dal or Thur — Cadjan pea (*Cajanus indicus*).			Linseed.			Mustard and Rapeseed.		
Present return.	Next preceding return.	Corresponding return of last year.	Present return.	Next preceding return.	Corresponding return of last year.	Present return.	Next preceding return.	Corresponding return of last year.	Present return.	Next preceding return.	Corresponding return of last year.
27	28	29	30	31	32	33	34	35	36	37	38
Rs. A. P.	Rs. A. P.	Rs. A. P.	Rs. A. P.	Rs. A. P.	Rs. A. P.	Rs. A. P.	Rs. A. P.	Rs. A. P.	Rs. A. P.	Rs. A. P.	Rs. A. P.
...	...	3 4 0	4 4 0	4 0 0	3 12 0	7 0 0	7 0 0	7 0 0	5 0 0	5 0 0	5 0 0
...	...	...	3 3 0	3 5 0	4 0 0	...	...	...	4 8 0	4 12 0	4 9 0
									Black mustard.		
...	...	...	3 14 0	3 12 0	4 12 0	6 8 0	6 8 0	5 8 0	4 10 0 to 4 12 0	4 6 0 to 4 10 0	4 0 0 to 4 12 0
									Rapeseed.		
									4 14 0	4 14 0	4 1 0
...	...	...	4 5 0	4 1 0	5 5 0	6 4 0	6 4 0	6 0 0	4 8 0	4 7 0	5 8 0
3 0 0	3 0 0	3 0 0	4 8 0	4 8 0	5 4 0	...	...	...	4 8 0	4 8 0	5 8 0
...	...	...	3 8 0	4 0 0	4 0 0	...	...	...	...	...	...
...	...	...	4 8 0	4 12 0	5 12 0	...	...	...	4 8 0	4 12 0	5 4 0
2 3 0	1 14 0	2 6 6	2 4 0	2 4 0	2 10 0	5 0 0	6 0 0	6 10 0	4 3 6	4 6 0	5 0 0
2 0 0	2 0 0	2 5 6	2 10 6	2 10 6	2 15 3	...	...	...	...	...	...
									Rapeseed.		
2 0 6	2 4 0	2 7 0	3 2 0	3 3 0	3 15 0	6 0 0	6 0 0	...	4 6 0	4 8 0	5 3 0
									Mustard.		
									4 0 0	4 0 0	
...	...	...	2 7 0	2 5 0	3 6 0	...	...	...	4 0 9	4 0 9	4 1 3
...	...	...	6 2 6 to 7 4 4	6 2 6 to 7 4 4	5 0 0 to 5 11 6	6 10 0	6 10 0	5 0 0	5 0 0	5 0 0	5 0 0

40 STANDARD SEERS.

TIL OR JINJILI SEED.			SUGAR (RAW).			COTTON, CLEANED.			JUTE.		
Present return.	Next preceding return.	Corresponding return of last year.	Present return.	Next preceding return.	Corresponding return of last year.	Present return.	Next preceding return.	Corresponding return of last year.	Present return.	Next preceding return.	Corresponding return of last year.
39	40	41	42	43	44	45	46	47	48	49	50
Rs. A. P.	Rs. A. P.	Rs. A. P.	Rs. A. P.	Rs. A. P.	Rs. A. P.	Rs. A. P.	Rs. A. P.	Rs. A. P.	Rs. A. P.	Rs. A. P.	Rs. A. P.
4 8 0	4 12 0	5 4 0	4 4 0	4 4 0	4 0 0	16 0 0	16 0 0	16 0 0	5 4 0	5 4 0	5 8 0
...	...	...	3 10 0	3 8 0	3 10 0	20 0 0	21 0 0	15 0 0	...	...	...
...	...	...	3 4 0 to 3 8 0	3 4 0 to 3 8 0	3 8 0 to 4 0 0	20 0 0	20 0 0	20 0 0	...	...	...
...	...	...	3 4 0	3 4 0	4 6 0	21 0 0	21 0 0	20 0 0	4 11 0	4 10 0	5 0 0
...	...	...	4 0 0	4 0 0	5 12 0	...	...	...	4 0 0	4 0 0	4 8 0
...	...	...	3 12 0	4 8 0	5 8 0	...	...	...	4 4 0	4 0 0	5 0 0
...	...	...	4 12 0	5 0 0	5 12 0	14 8 0	15 0 0	14 0 0	...	...	...
5 12 0	5 12 0	5 0 0	2 12 0	2 8 0	3 8 0	15 0 0	15 0 0	16 0 0	4 6 0	3 8 0	3 4 0
...	...	...	2 5 6	2 5 6	2 13 9	...	...	...	...	...	...
...	...	6 4 0	4 0 0	4 0 0	4 13 6	19 0 0	19 0 0	16 0 0	...	...	...
4 7 6	4 7 6	4 8 6	4 11 0	4 2 0	4 11 0	20 0 0	20 0 0	22 0 0	...	...	...
...	...	...	4 0 0	3 10 0 to 4 0 0	4 7 0 to 5 0 0	20 0 0	20 0 0	22 12 0	...	...	...

Ghi (clarified butter).			Tobacco leaf.			Hides (cow).			Grass.		
Present return.	Next preceding return.	Corresponding return of last year.	Present return.	Next preceding return.	Corresponding return of last year.	Present return.	Next preceding return.	Corresponding return of last year.	Present return	Next preceding return	Corresponding return of Last year
51	52	53	54	55	56	57	58	59	60	61	62
Rs. A. P	Rs. A. P.	Rs. A. P.	Rs. A. P.	Rs. A. P.	Rs. A. P	Rs. A. P	Rs A. P	Rs A. P.	Rs. A P.	Rs. A. P.	Rs. A P
						Per 100 pieces.					
39 0 0	39 0 0	40 0 0	8 8 0	8 8 0	9 0 0	250 0 0	250 0 0	250 0 0	1 0 0	1 0 0	1 0 0
32 0 0	32 0 0	42 0 0	...	...	...	...	...	...	...	...	...
			Madhukhali.			Uncleaned hide per piece					
31 8 0	31 8 0	40 0 0	5 8 0 to 6 8 0	5 4 0 to 6 4 0	6 0 0 to 7 6 0	1 0 0 to 2 8 0	0 12 0 to 2 7 0	1 0 0 to 2 2 0	...	...	...
			Pulta.			Cleaned hide per piece.					
						1 4 0 to 2 12 0	1 0 0 to 2 11 0	1 2 0 to 2 4 0			
53 0 0	53 0 0	53 0 0	6 12 0	6 8 0	8 0 0	...	...	...	...	...	...
33 0 0	33 0 0	41 0 0	10 0 0	10 0 0	9 0 0	...	...	...	0 2 6	0 2 6	0 2 6
						Per maund.					
40 0 0	40 0 0	42 0 0	7 8 0	7 0 0	9 0 0	25 0 0	26 0 0	25 0 0	0 3 0	0 3 0	0 3 0
						Per maund.					
33 8 0	35 0 0	42 0 0	11 0 0	10 0 0	12 12 0	16 4 0	16 8 0	18 4 0	...	...	...
30 0 0	30 0 0	34 0 0	3 8 0	4 0 0	3 0 0	...	...	...	0 5 0	0 6 0	0 4 0
29 1 6	29 1 6	35 9 0	8 0 0	8 0 0	8 0 0	...	...	...	...	...	...
32 0 0	32 0 0	40 0 0	5 0 0	8 0 0	...	...	...	...	...	...	...
						Per maund.					
34 8 0	36 0 0	46 14 0	4 4 0	4 4 0	4 4 0	25 0 0	25 0 0	25 0 0	0 7 0	0 8 0	0 8 6
						Per piece.					
32 0 0 to 37 3 0	32 0 0 to 37 3 10	36 0 0 to 40 0 0	6 10 0 to 13 5 3	6 10 0 to 13 5 3	6 10 6 to 13 0 0	1 4 0 to 2 8 0	1 4 0 to 2 8 0	1 0 0	0 4 0	0 5 3	0 4 0

in the undermentioned Marts of Bengal on the 31st July 1902.

Straw.			Juar stalks.			Prices per maund of 40 standard seers.									Marts.
						Iron.			Firewood.			Salt.			
Present return.	Next preceding return.	Corresponding return of last year.	Present return.	Next preceding return.	Corresponding return of last year.	Present return.	Next preceding return.	Corresponding return of last year.	Present return.	Next preceding return.	Corresponding return of last year.	Present return.	Next preceding return.	Corresponding return of last year.	
63	64	65	66	67	68	69	70	71	72	73	74	75	76	77	78
Rs. A. P.	Rs. A. P.	Rs. A. P.	Rs. A. P.	Rs. A. P.	Rs. A. P.	Rs. A. P.	Rs. A. P.	Rs. A. P.	Rs. A. P.	Rs. A. P.	Rs. A. P.	Rs. A. P.	Rs. A. P.	Rs. A. P.	
0 12 0	0 12 0	0 14 0	...	...	...	5 4 0	5 4 0	5 4 0	0 8 0	0 8 0	0 8 0	Panga. 3 6 0	Panga. 3 6 0	3 8 0	1. Calcutta.
0 10 8	0 10 0	0 14 0	...	...	...	...	...	...	0 8 0	0 8 0	0 6 0	Crushed. 3 4 0	Crushed. 3 4 0	3 10 0	2. Burdwan.
0 4 8	0 4 8	0 10 8	...	...	...	3 12 0 to 4 4 0	3 12 0 to 4 4 0	4 0 0 to 5 0 0	0 4 0	0 4 0	0 4 0	Panga. 3 8 0	Panga. 3 8 0	3 12 0	3. Midnapore.
1 0 0	1 0 0	1 0 0	...	...	...	7 0 0	7 0 0	7 0 0	0 10 0	0 8 0	0 5 0	Panga. 3 12 0	Panga. 3 12 0	3 14 0	4. Pabna.
0 7 0	0 7 0	0 7 0	...	...	...	7 0 0	7 0 0	6 0 0	0 5 0	0 5 0	0 5 0	Panga. 3 12 0	Panga. 3 12 0	4 0 0	5. Rangpur.
...	...	...	...	...	...	5 0 0	5 8 0	6 0 0	0 5 3	0 5 3	0 5 3	Panga. 3 10 0	Panga. 3 12 0	3 14 0	6. Dacca.
...	...	...	...	...	...	4 12 0	5 0 0	5 0 0	...	...	...	3 6 0	3 8 0	4 1 0	7. Chittagong.
...	...	...	...	...	...	4 0 0	5 0 0	5 0 0	0 7 0	0 7 0	0 6 0	3 10 0	3 10 0	3 12 0	8. Patna.
...	...	...	...	...	...	5 11 6	5 11 6	5 11 6	0 4 0	0 4 0	0 4 0	Panga. 4 0 0	Panga. 4 0 0	4 0 0	9. Muzaffarpur.
...	...	...	...	...	...	5 0 0	5 0 0	5 6 0	0 5 9	0 5 9	0 5 9	Panga. 3 10 0	Panga. 3 10 0	3 14 6	10. Bhagalpur.
0 7 0	0 6 0	0 8 0	...	...	...	4 4 0	4 4 0	4 6 0	0 4 0	0 4 0	0 4 0	Karkatch. 3 4 0	Karkatch. 3 0 0	3 0 0	11. Cuttack.
0 6 0 to 0 10 0	0 6 0 to 0 10 0	No fixed rate.	...	...	...	5 10 0	5 10 0	5 11 6	0 4 0	0 4 0	0 4 0	Panga. 4 2 0	Panga. 4 2 0	4 6 0	12. Ranchi.

W. C. MACPHERSON,

Offg. Secretary to the Govt. of Bengal.

IRRIGATION DEPARTMENT, BENGAL.

IRRIGATION OPERATIONS FOR THE OFFICIAL YEAR 1902-1903

Areas leased for Irrigation up to end of June 1902.

Circle.	District.	Canal.	Estimated full discharge.	Average discharge in month.	Discharge utilised.	Approximate area of land irrigated during the year up to the end of the month.	Approximate area of land under irrigation up to the same date last year.	Details of areas leased.								Rainfall, 1902-1903.		Rainfall, 1901-1902.		Remarks.
								Long-term leases.	Season leases.						Grand Total.	During month.	Up to end of month.	During month.	Up to end of month.	
									Kharif.	Rabi.	Sugarcane.	Bhadoi.	Hot-weather.	Total.						
1	2	3	4	5	6	7	8	9	10	11	12	13	14	15	16	17	18	19	20	21
			C. ft.	C. ft.	C. ft.	Acres.	Acres.	Acres.	Acres.	Acres.	Acres.	Acres.	Acres.	Acres.	Acres.	Inches.	Inches.	Inches.	Inches.	
Orissa	Cuttack	Taldanda, 1st reach	1,342	84	.....	.....	.....	13,433	.....	.....	.....	.....	.....	.....	13,433	2·27	9·27	4·75	5·09	Kulsai.
		Ditto, 2nd ,,	566	54	.....	.....	.....		.....	.....	.....	.....	.....	.....						
		Machgaon	766	30	.....	.....	.....	29,002	.....	.....	.....	.....	.....	.....	29,002	2·95	7·56	1·80	4·35	Balia.
																3·06	7·83	2·30	4·70	Jagateingpur.
		Kendrapara	1,100	2	1	16	.....	45,778	(a)36	.....	5	.....	11	52	45,830	4·59	10·67	4·70	8·43	Kendupatna.
																7·36	12·80	5·04	8·01	Marsaghai.
		Gobri	373	67	31	.....	.....	3,646	.....	.....	.....	.....	.....	.....	3,645	4·63	10·95	3·46	7·11	Kendrapara.
		Do. Extension	648	36	26	.....	.....	2,406	.....	.....	.....	.....	.....	.....	2,406	3·07	11·36	6·46	10·46	Ichapur.
		Patamundi	385	47	11	.....	.....	13,764	.....	.....	.....	.....	.....	.....	13,764	5·71	13·99	4·01	10·25	Nurtang.
		High Level, Range I	608	70	.....	8	1,932	23,011	.....	.....	7	.....	1	8	23,019	6·06	14·47	3·63	7·39	Jenapur.
		Ditto, do. II	727	39	2	150	400	4,546	.....	.....	.....	.....	.....	.....	4,546	No gauge.				
		Jajpur Canal, including Dudhai Channel	700	.....	.....	48	62	3,778	.....	.....	55	.....	19	74	3,852	4·90	12·09	2·33	5·72	Jajpur.
	Balasore	High Level, Range III	727	113	102	1,574	752	30,086	.....	.....	179	.....	181	360	30,446	3·32	12·30	3·74	7·75	Akhoyapada.
		Total	.....	.....	.....	1,796	3,146	169,451	36	.....	246	.....	212	494	169,945	.....	.....	.....	.....	
		Total of the corresponding period of last year	.....	.....	.....	.....	.....	134,083	.....	.....	323	.....	67	390	134,473	.....	.....	.....	.....	
South-Western.	Midnapore	Midnapore	1,411	87·76	58·57	5,447	7,425	53,065	6,728	.....	.....	.....	.....	6,728	59,793	5·15	18·52	6·59	14·11	
		Panchkura	522	44·93	41·45	665	646	7,317	55	.....	.....	.....	.....	55	7,372	1·81	13·71	7·33	15·22	
	Howrah	Tidal Reaches, Ranges I & II	.....	.....	.....	.....	.....	263	.....	.....	.....	.....	.....	.....	263	4·27	16·32	15·56	18·26	
		Total	.....	.....	.....	6,112	7,971	60,645	(b)6,783	.....	.....	.....	.....	6,783	67,428	.....	.....	.....	.....	
		Total of the corresponding period of last year	.....	.....	.....	.....	.....	50,532	(b)10,051	.....	.....	.....	.....	10,051	60,583	.....	.....	.....	.....	
Sone	Shahabad	Western Main	4,342	713	52	5,391	4,690	15,741	515	.....	.....	.....	1,054	1,569	17,313	0·54	2·21	0·22	1·79	
		Buxar	1,226	233	137	23,132	21,899	67,959	625	.....	.....	.....	5,715	6,370	74,329					
		Arrah	2,900	382	300	46,337	43,292	126,477	.....	.....	.....	.....	15,938	15,938	142,415	1·68	3·46	0·21	2·54	
	Patna and Gaya.	Eastern Main	1,466	86	82	551	616	1,782	.....	.....	.....	.....	44	44	1,826	1·78	3·39	1·51	3·05	
		Patna				18,468	29,235	54,701	306	.....	.....	.....	3,001	3,307	58,008					
		Total	.....	.....	.....	93,929	90,732	266,663	1,446	.....	.....	.....	25,782	27,238	293,891	.....	.....	.....	.....	
		Total of the corresponding period of last year	.....	.....	.....	.....	.....	254,431	7,284	.....	.....	.....	23,828	31,052	285,453	.....	.....	.....	.....	
		Grand Total	.....	.....	.....	101,837	101,849	496,759	8,265	.....	246	.....	25,904	34,506	531,264	.....	.....	.....	.....	
		Grand Total of the corresponding period of last year	.....	.....	.....	.....	.....	439,046	17,275	.....	323	.....	23,895	41,493	480,539	.....	.....	.....	.....	

(a) This represents the area under provisional lease.
(b) Ditto ditto ditto.

CALCUTTA,
The 5th August 1902.

R. C. EDGE,
Under-Secy. to the Govt. of Bengal.

IRRIGATION DEPARTMENT, BENGAL.

Abstract statement showing Tollage on Canals in Bengal classed as Major Works for the month of June 1902, as compared with that of the corresponding month of the previous year.

Canals.	Tollage, 1902-1903.		Tollage, 1901-1902.	
	During the month.	To end of the month.	During the month.	To end of the month.
1	2	3	4	5
Orissa Circle.	Rs. A. P.	Rs. A. P.	Rs. A. P.	Rs. A. P
Taldanda Canal System	921 7 3	4,094 0 0	2,748 6 6	2,748 6 6
Kendrapara ditto	2,885 8 9	8,321 9 2	2,647 5 2	14,475 9 1
High Level, Range I	203 14 9	1,841 11 9	695 0 3	1,676 5 0
Ditto, „ II	56 11 6	365 8 3	129 14 6	370 3 0
Ditto, „ III	7 1 9	27 12 9	20 5 9	62 8 3
Jajpur Canal ...	37 0 0	92 11 6	26 2 3	68 2 9
Total Orissa Circle ...	4,111 12 0	14,743 5 5	6,267 2 5	19,401 2 7
South-Western Circle.				
Midnapore Canal	8,868 3 6	25,976 13 6	8,255 1 3	26,648 4 9
Hijili Tidal Canal	3,952 15 9	13,957 14 3	4,502 13 6	16,789 12 6
Total South-Western Circle ...	12,821 3 3	39,934 11 9	12,757 14 9	43,438 1 3
Sone Circle.				
Patna Canal System ...	232 12 9	1,912 11 6	1,258 3 0	5,658 0 6
Arrah ditto ...	442 13 0	2,633 1 3	491 13 3	3,739 15 0
Buxar ditto ...	266 13 9	1,013 1 6	466 2 6	1,073 9 6
Total Sone Circle ...	942 7 6	5,558 14 3	2,216 2 9	10,471 9 0
Grand Total ...	17,875 6 9	60,236 15 5	21,241 3 11	73,310 12 10

Assessed Tollage Receipts.

Canals.	Earnings, 1902-1903.		Earnings, 1901-1902.	
	During the month.	To end of the month.	During the month.	To end of the month.
1	2	3	4	5
	Rs. A. P.	Rs. A. P	Rs. A. P.	Rs. A. P.
Orissa Canals ...	4,111 12 0	14,743 5 5	6,267 2 5	19,401 2 7
Midnapore Canal ..	8,868 3 6	25,976 13 6	8,255 1 3	26,648 4 9
Hijili Tidal Canal ...	3,952 15 9	13,957 14 3	4,502 13 6	16,789 12 6
Sone Canals ...	942 7 6	5,558 14 3	2,216 2 9	10,471 9 0
Total ...	17,875 6 9	60,236 15 5	21,241 3 11	73,310 12 10

Calcutta,
The 5th August 1902.

R. C. Edge,
Under-Secy. to the Govt. of Bengal.

IRRIGATION DEPARTMENT, BENGAL.

Abstract Statement showing Tollage on Canals in Bengal classed as Minor Works and Navigation for the month of June 1902, as compared with that of the corresponding month of the previous year.

Canals.	Tollage, 1902-1903.		Tollage, 1901-1902.	
	During the month.	To end of the month.	During the month.	To end of the month.
1	2	3	4	5
	Rs. A. P.	Rs. A. P.	Rs. A. P.	Rs. A. P.
Calcutta and Eastern Canals	14,855 8 6	48,588 2 9	14,190 6 0	42,548 9 6
Tolly's Nala ...	4,489 14 0	12,471 12 9	4,357 3 0	12,425 1 3
Total ..	19,345 6 6	61,059 15 6	18,547 9 0	54,973 10 9
Orissa Coast Canal ...	1,838 6 0	7,338 12 9	2,938 0 9	12,865 7 3
Nadia Rivers ...	4,567 12 0	12,653 8 0	3,341 14 0	8,624 5 6
Grand Total ...	25,751 8 6	81,052 4 3	24,827 7 9	76,463 7 6

Calcutta,
The 5th August 1902.

R. C. Edge,
Under-Secy. to the Govt. of Bengal.

GOVERNMENT OF BENGAL, IRRIGATION DEPARTMENT.

Approximate return of traffic on the Circular and Eastern Canals for the week ending Saturday, the 2nd August 1902, as compared with the corresponding week of the previous year.

Nature of Cargo	Week ending Saturday, the 2nd August 1902.			Week ending Saturday, the 3rd August 1901.		
	Number of boats.	Weight of cargo.	Tollage.	Number of boats.	Weight of cargo.	Tollage.
		Mds.	Rs		Mds.	Rs.
Rice and paddy	404	41,850	587	355	43,475	486
Jute	40	16,675*	203	10	5,850†	54
Firewood	119	1,03,500	1,580	108	65,400	973
Other articles	512	1,06,772	1,301	669	1,66,350	2,104
Total ...	1,075	2,68,797	3,676	1,142	2,81,075	3,617

* Weight by canal measurement, 17,475 maunds.
† Ditto ditto, 5,450 ,,

Results of the Meteorological Observations taken at the Alipore Observatory from 27th July to 2nd August 1902

Month.	Date.	Maximum in sun.	Number of hours of bright sunshine.	Mean pressure barometer at 32° Fahr.	Temperature.				Hygrometry.				Wind.		Rain	Weather.
					Mean.	Maximum.	Range.	Minimum.	Mean wet bulb.	Vapour tension.	Dew point.	Humidity.	Prevailing direction	Miles recorded.		
1902.				Inches.	°	°	°	°	°	Inch.	°	%			Inches.	
July	27th	148·7	3·0	29·351	84·0	90·8	11·5	79·3	80·4	0·994	79·0	85	SW, calm and variable.	107	0 05	Chiefly cloudy, o, d.
,,	28th	106·4	Nil	·429	81·5	83·6	5·7	77·9	79·6	·985	78·8	91	SSW, S by W and SE by E.	131	0·54	Cloudy, o, d, p.
,,	29th	119·5	Nil	·570	83·1	85·1	5·5	79 6	80·5	1 008	79·5	89	SE by E and SE	116	0·06	Cloudy, o, d.
,,	30th	102·9	Nil	·623	79·6	84·1	9·2	74·9	77·7	0·925	76·9	91	SSE and ESE ...	79	2·84	Cloudy, o, d, p.
,,	31st	149·9	4·4	·576	85·3	91·2	11·6	79·6	81 0	1·001	79·3	82	S and SSW ...	115	Nil	Chiefly cloudy, o.
Aug.	1st	148·4	7·6	·569	85·3	92·4	14·4	78·0	80 9	0 996	79·1	81	SW by S, and SW	81	0·64	Partially cloudy, t, ⊿, p.
,,	2nd	155·4	1·4	·602	82·5	92·0	14·0	78 0	78·9	·941	77·4	85	SSW, calm and variable.	56	0·86	Cloudy, o, g, d, p, t, ⊿.

The mean pressure of the seven days	Inches.	29·531
The average pressure of the corresponding period for 24 years, Surveyor-General's Office		29·557
	Hours.	
The total number of hours of bright sunshine		16·4
The maximum possible number of hours of sunshine		92·1
	°	
The mean temperature of the seven days		83·0
The average temperature of the corresponding period for 24 years, Surveyor-General's Office		82·9
The extreme variation of temperature		17·5
The maximum temperature		92·4
	Miles.	
The highest velocity of the wind in one hour		14
	%	
The mean relative humidity		86
The average relative humidity of the corresponding period for 24 years, Surveyor-General's Office		87
	Inches.	
The total fall of rain from 27th July to 2nd August 1902		4·99
The average fall of the corresponding period for 24 years, Surveyor-General's Office		3·85
The total fall from 1st January to 2nd August 1902		39·30
The average fall of the corresponding period for 24 years, Surveyor-General's Office		35·75

The mean pressure, temperature, etc., are deduced from the traces of the Barogrpah and Thermograph, and from eye observations.

The maximum and minimum temperatures are obtained from self-registering thermometers. All the thermometers are verified and the readings have been corrected to a standard constructed and verified at the Kew Observatory. They are exposed under a thatched shed open at the sides, and are suspended four feet above the ground.

The barometer readings are corrected approximately to those of the standard, Newman's No. 86, formerly at the Surveyor-General's Office.

The hygrometric elements are obtained from Tables III, IV, and V of the official tables computed in the Meteorological Office, and based on Regnault's modifications of August's formula.

The directions and the movement of the wind are taken from the trace of a Beckley's anemograph.

The mouth of the rain-gauge is one foot above the ground.

o, overcast; g, gloomy; t, thunder; d, drizzling rain; ⊿, lightning; p, passing temporary showers.

N.B.—In the weekly report from 20th to 26th July 1902, *read* 133·4 *for* 125·2 as maximum in sun of the 20th July 1902.

METEOROLOGICAL OFFICE, GOVT. OF INDIA,
Alipore (Calcutta), the 4th August 1902.

G. W. KÜCHLER
for *Meteorological Reporter to the Govt. of India, and Director-General of Indian Observatories.*

BENGAL CENTRAL RAILWAY COMPANY, LIMITED.

Abstract of principal Commodities carried over the Bengal Central Railway during the month of May 1902, as compared with the same month of previous year.

Articles.	1902.		1901.		Total.		Increase.	Decrease.
	Up.	Down.	Up.	Down.	1902.	1901.		
	Tons.	Tons.	Tons.	Tons.	Tons.	Tons.	Tons.	Tons.
I.—Apparel, including drapery, haberdashery, millinery, uniforms, accoutrements, boots and shoes.	1	.....	16	.....	1	16	.....	15
II.—Coal and Coke carried for the Public and Foreign Railways.	1,690	.....	1,276	.....	1,690	1,276	414	.....
III.—Cotton—								
1. Raw	6	66	1	30	72	31	41	.....
2. Manufactured—								
(a) Twist and yarn, European...	43	.....	59	.....	43	59	.....	16
(b) Ditto, Indian ...	.....	.....	4	.....	.....	4	.....	4
(c) Piece-goods, European ...	103	.....	152	.....	103	152	.....	49
(d) Ditto, Indian ..	2	.....	2	.....	2	2	.....	.....
(e) Others	.....	.....	.....	.....	.....	.....	.....	.....
IV.—Chemicals, excepting saltpetre	.....	.....	.....	.....	.....	.....	.....	.....
V.—Drugs—								
1. Intoxicating, other than opium	1	.....	1	.....	1	1	.....	.....
2. Non-intoxicating—								
(a) Medical preparations ...	1	.....	2	.....	1	2	.....	1
(b) Others	10	.....	1	.....	10	1	9	.....
VI.—Dyes and Tans—								
1. Indigo	.....	.....	.....	.....	.....	.....	.....	.....
2. Myrabolams	.....	.....	.....	.....	.....	.....	.....	.....
3. Cutch	.....	.....	.....	.....	.....	.....	.....	.....
4. Turmeric	7	47	73	27	54	100	.....	46
5. Alizarine and Aniline Dyes ...	.....	.....	.....	.....	.....	.....	.....	.....
6. Al (Morinda Citrifolia)	.....	.....	.....	.....	.....	.....	.....	.....
7. Tanning barks	.....	.....	1	.....	.....	1	.....	1
8. Others	.....	.....	.....	.....	.....	.....	.....	.....
VII.—Fodder—								
1. Oilcake	75	55	80	9	130	89	41	.....
2. Hay, straw and grass	.....	.....	.....	.....	.....	.....	.....	.....
VIII.—Fruits and vegetables, fresh	119	520	185	478	639	662	.....	23
IX.—Grain and Pulse—								
1. Wheat	.....	.....	.....	.....	.....	.....	.....	.....
2. Rice in the husk	19	41	2	148	60	150	.....	90
3. Do. not in the husk	17	86	49	121	103	170	.....	67
4. Jawar and bajra	.....	.....	.....	.....	.....	.....	.....	.....
5. Gram and pulse	46	107	31	92	153	173	.....	20
6. Wheat flour	17	4	17	.....	21	17	4	.....
7. Others	1	.....	.....	.....	1	.....	1	.....
X.—Hides and Skins—								
1. Hides of cattle—								
(a) Dressed or tanned	.....	.....	.....	.....	.....	.....	.....	.....
(b) Raw	.....	41	.....	75	41	75	.....	34
2. Skins of sheep and other animals—								
(a) Dressed or tanned	.....	.....	.....	.....	.....	.....	.....	.....
(b) Raw	.....	9	.....	13	9	13	.....	4
XI.—Horns	.....	.....	.....	.....	.....	.....	.....	.....
XII.—Hemp (Indian) and other fibres, excluding jute.	.....	36	.....	203	36	203	.....	167
XIII.—Jute—								
1. Raw	27	646	.....	301	673	301	372	.....
2. Gunny-bags and cloth	11	4	3	7	15	10	5	.....
XIV.—Lac	.....	.....	.....	.....	.....	.....	.....	.....
XV.—Leather—								
1. Unwrought	.....	.....	.....	.....	.....	.....	.....	.....
2. Wrought, excepting boots and shoes.	.....	.....	.....	.....	.....	.....	.....	.....
XVI.—Liquors—								
1. Ale and beer	.....	.....	.....	.....	.....	.....	.....	.....
2. Spirit of all kinds, including country spirit.	.....	.....	.....	.....	.....	.....	.....	.....
3. Wine	4	.....	4	.....	4	4	.....	.....
4. All other sorts, including toddy and fermented liquor, other than ale and beer.	.....	.....	.....	.....	.....	.....	.....	.....
XVII.—Metals—								
1. Copper, unwrought	.....	.....	.....	.....	.....	.....	.....	.....
2. Brass, ditto	.....	.....	.....	.....	.....	.....	.....	.....
3. Copper, wrought	.....	.....	.....	.....	.....	.....	.....	.....
4. Brass, ditto	23	2	9	3	24	12	12	.....
5. Iron and steel—								
(a) Cast	.....	.....	.....	.....	.....	.....	.....	.....
(b) Unwrought	.....	.....	.....	.....	.....	.....	.....	.....
(c) Wrought	31	.....	48	.....	31	48	.....	17
(d) Manufactured	2	.....	1	.....	2	1	1	.....
6. Others	24	18	18	31	42	49	.....	7
XVIII.—Oils—								
1. Kerosine	234	5	561	.....	239	561	.....	322
2. Castor	1	.....	.....	.....	1	.....	1	.....
3. Cocoanut	13	.....	41	.....	13	41	.....	28
4. Mustard and rape	65	.....	71	.....	65	71	.....	6
5. Others	.....	.....	.....	.....	.....	.....	.....	.....
XIX.—Oilseeds—								
1. Linseed	3	168	.....	346	171	346	.....	175
2. Rape and mustard...	174	35	631	8	209	639	.....	430
3. Til or jinjili	.....	21	.....	14	21	14	7	.....
4. Poppy	.....	.....	.....	.....	.....	.....	.....	.....
5. Earthnuts	.....	.....	.....	.....	.....	.....	.....	.....
6. Castor...	.....	.....	.....	.....	.....	.....	.....	.....
7. Others	.....	.....	.....	.....	.....	.....	.....	.....
XX.—Opium	.....	.....	.....	13	.....	13	.....	13
XXI.—Paper and Pasteboard	11	.....	24	1	11	25	.....	14
XXII.—Provisions—								
1. Ghee	2	.....	2	.....	2	2	.....	.....
2. Dried fruits and nuts	.....	.....	.....	.....	.....	.....	.....	.....
3. Others	4	6	5	17	10	22	.....	12

ARTICLES.	1902.		1901.		TOTAL.		Increase.	Decrease.
	Up.	Down.	Up.	Down.	1902.	1901.		
	Tons.	Tons.	Tons.	Tons.	Tons.	Tons.	Tons.	Tons.
XXIII.—Railway plant and rolling-stock carried for the Public and Foreign Railways—								
1. Locomotives, engines, and tenders, and parts thereof.								
2. Carriages and trucks, and parts thereof.								
3. Materials—								
(a) Steel rails and fish-plates								
(b) Sleepers and keys of steel and cast-iron.								
(c) Other sorts								
XXIV.—Salt	405		581		405	581		176
XXV.—Saltpetre and other saline substances—								
1. Saltpetre	1		1		1	1		
2. Other saline substances	7		10		7	10		3
XXVI.—Silk—								
1. Raw—								
(a) Foreign								
(b) Indian								
2. Silk piece-goods—								
(a) Foreign								
(b) Indian								
XXVII.—Spices—								
1. Betelnuts	4	165	1	293	169	294		125
2. Pepper								
3. Ginger								
4. Chillies	1	1	20	21	2	41		39
5. Cardamoms								
6. Others	1	40	39	45	41	84		43
XXVIII.—Stone and lime	108	1	86		109	86	23	
XXIX.—Sugar—								
1. Refined or crystallised, including sugarcandy.	31		37		31	37		6
2. Unrefined—								
(a) Sugar	19	367	19	587	386	606		220
(b) Gur, rab, molasses, jaggery, and other saccharine produce.	8	11		47	19	47		28
XXX.—Tea—								
1. Foreign								
2. Indian								
XXXI.—Tobacco—								
1. Unmanufactured	147	42	236	17	189	253		6
2. Manufactured—								
(a) Cigars								
(b) Other sorts			1			1		1
XXXII.—Wood—								
1. Timber, unwrought	101	29	350	5	130	355		225
2. Manufactures	6	10	11	2	16	13	3	
XXXIII.—Wool—								
1. Raw								
2. Manufactured—								
(a) Carpets and rugs								
(b) Piece-goods, European ...								
(c) Ditto, Indian ...								
(d) Other sorts of manufactures.								
XXXIV.—All other articles of merchandise ...	295	167	388	248	463	636		174
Total ...	3,920	2,750	5,199	3,203	6,670	8,401	934	2,665

T. SIDDLE,

Chief Auditor and Accountant.

CALCUTTA, *the 31st July 1902.*

Weekly Return of Traffic Receipts on Indian Railways.

EAST INDIAN RAILWAY.

Approximate Return of Traffic for the first 12 days of July 1902, on 1,913·49 miles open.*

	Coaching Traffic.		Merchandise and Mineral Traffic.		Other earnings (estimated).	Total earnings.	Traffic Train-miles run.		
	Number of passengers.	Coaching receipts.	Weight carried.	Receipts.			Coaching.	Merchandise.	Total.
		Rs. A. P.	Mds. s.	Rs. A. P.	Rs. A. P.	Rs. A. P.			
		(a)		(b)					
Total traffic for the period ...	704,605	6,77,571 1 0	84,01,481 10	14,45,111 10 0	38,006 0 0	21,60,688 11 0	184,458	312,305	496,763
Or per mile of railway ...	.....	354 1 8	.....	755 8 0	19 13 9	1,129 2 11	.....	.....	.....
Total for 1¼ weeks ...	704,605	6,77,571 1 0	84,01,481 10	14,45,111 10 0	38,006 0 0	21,60,688 11 0	184,458	312,305	496,763
Comparison.									
Total for corresponding 13 days of previous year.	707,203½	7,62,573 0 0	1,04,38,390 30	18,92,790 14 5	34,036 8 7	26,89,400 7 0	198,460½	388,441½	586,902
Per mile of railway corresponding period of previous year.	.....	415 0 8	.....	1,030 1 10	18 8 4	1,463 10 5	.....	.....	.....
Total for corresponding 1¼ weeks of previous year.	707,203½	7,62,573 0 0	1,04,38,390 30	18,92,790 14 5	34,036 8 7	26,89,400 7 0	198,460½	388,441½	586,902

* The increase of miles 8·13 is due to the opening of Sitarampur-Ikra Branch.
(a) The decrease is in outward traffic, chiefly from Howrah Station.
(b) The decrease is chiefly in coal, food-grains, and seeds.

1902. *Abstract of progressive weekly returns of all earnings for 1902 in comparison with 1901.*

Open mileage	Period.	Coaching Traffic.		Merchandise and Mineral Traffic.		Other earnings.	Total.	Per mile of Railway.	Train mileage.	
		No. of Passengers.	Rs.	Mds.	Rs.	Rs.	Rs.	Rs.	No.	Rate. Rs. A. P.
1,913·49	12 days of July ...	704,605	6,77,571	84,01,481	14,45,112	38,006	21,60,689	1,129	496,763	4 5 7

Abstract of progressive weekly returns of all earnings for 1902 in comparison with 1901—concluded. *1901.*

1,837·60	13 days of July ...	No. of Passengers. 707,203	Rs. 7,62,573	Mds. 1,04,38,391	Rs 18,92,791	Rs. 34,036	Rs. 26,89,400	Rs 1,464	No. 586,902	Rate. Rs. A. P. 4 9 4

TARKESSUR BRANCH RAILWAY.

Approximate Return of Traffic for the first 12 days of July 1902, on 22·23 miles open.

	Coaching Traffic.		Merchandise and Mineral Traffic.		Other earnings (estimated).	Total earnings.	Traffic Train-miles run.		
	No. of passengers.	Coaching receipts.	Weight carried.	Receipts.			Coaching.	Merchandise.	Total.
		Rs. A. P.	Mds. s.	Rs. A. P.	Rs. A. P.	Rs. A. P.			
Total traffic for the period ...	38,151	9,696 3 0	6,400 20	653 7 0	12 0 0	10,361 10 0	1,880	182	2,062
Or per mile of railway ...	.....	436 2 10	.....	29 6 4	0 8 7	466 1 9	.....	.....	.....
Total for 1¼ weeks ...	38,151	9,696 3 0	16,400 20	653 7 0	12 0 0	10,361 10 0	1,880	182	2,062
Comparison.									
Total for corresponding 13 days of previous year.	41,387½	9,909 9 4	20,302 0	785 14 0	18 4 0	10,713 11 4	2,087	157	2,244
Per mile of railway corresponding period of previous year.	.....	445 14 5	.....	35 5 7	0 13 2	481 15 2	.....	.....	.....
Total for corresponding 1¼ weeks of previous year.	41,387½	9,909 9 4	20,302 0	785 14 0	18 4 0	10,713 11 4	2,087	157	2,244

1902. *Abstract of progressive weekly returns of all earnings for 1902 in comparison with 1901.*

Open mileage.	Period.	Coaching Traffic.		Merchandise and Mineral Traffic.		Other earnings.	Total.	Per mile of railway.	Train mileage.	
		No. of passengers.	Rs.	Mds.	Rs.	Rs.	Rs.	Rs.	No.	Rate. Rs. A. P.
22·23	12 days of July ...	38,151	9,696	16 401	653	12	10,361	466	2,062	5 0 2

Abstract of progressive weekly returns of all earnings for 1902 in comparison with 1901—concluded. *1901.*

22·23	13 days of July ...	No. of passengers. 41,388	Rs 9,910	Mds. 20,302	Rs 786	Rs. 18	Rs. 10,714	Rs. 482	No. 2,244	Rate. Rs A. P. 4 12 5

DELHI-UMBALLA-KALKA RAILWAY.

Approximate Return of Traffic for the first 12 days of July 1902 on 162·24 miles open.

	Coaching Traffic.		Merchandise and Mineral Traffic.		Other earnings (estimated).	Total earnings.	Traffic Train-miles run.		
	No. of Passengers.	Coaching Receipts.	Weight carried.	Receipts.			Coaching.	Merchandise.	Total.
		Rs. A. P.	Mds. S.	Rs. A. P.	Rs. A. P.	Rs. A. P.			
Total traffic for the period	38,150	28,888 0 0	1,46,155 20	17,796 1 0	84 0 0	46,768 1 0	14,400	7,204	21,604
Or per mile of railway	.....	178 0 11	.....	109 11 1	0 8 3	288 4 3	.....	... ..	.....
Total for 1½ weeks ...	38,150	28,888 0 0	1,46,155 20	17,796 1 0	84 0 0	46,768 1 0	14,400	7,204	21,604
Comparison.									
Total for corresponding 13 days of previous year.	41,383	31,191 12 4	3,15,898 30	30,743 12 0	82 2 9	62,017 11 1	14,705	7,239½	21,944½
Per mile of railway corresponding period of previous year.	.....	192 4 2	.....	189 7 11	0 8 1	382 4 2	.....	.....	... ..
Total for corresponding 1½ weeks of previous year.	41,383	31,191 12 4	3,15,898 30	30,743 12 0	82 2 9	62,017 11 1	14,705	7,239½	21,944½

1902. *Abstract of progressive weekly returns of all earnings for 1902 in comparison with 1901.*

Open mileage.	Period.	Coaching Traffic.		Merchandise and Mineral Traffic.		Other earnings.	Total.	Per mile of railway.	Train mileage.	
		Number of Passengers.	Rs.	Mds.	Rs.	Rs.	Rs.	Rs.	No.	Rate. Rs. A. P.
162·24	12 days of July ...	38,150	28,888	1,46,156	17,796	84	46,768	288	21,604	2 2 3

Abstract of progressive weekly returns of all earnings for 1902 in comparison with 1901—concluded. *1901.*

162·24	13 days of July ...	Number of Passengers. 41,383	Rs. 31,192	Mds. 3,15,809	Rs. 30,744	Rs. 82	Rs. 62,018	Rs. 382	No. 21,945	Rate. Rs A. P. 2 13 3

SOUTH BEHAR RAILWAY.

Approximate Return of Traffic for the first 12 days of July 1902, on 78·76 miles open.

	Coaching Traffic.		Merchandise and Mineral Traffic.		Other earnings (estimated).	Total earnings.	Traffic Train-miles run.		
	Number of passengers.	Coaching receipts.	Weight carried.	Receipts.			Coaching.	Merchandise.	Total.
		Rs. A. P.	Mds. S.	Rs. A. P.	Rs. A. P.	Rs. A. P.			
Total traffic for the period	20,060	9,775 10 0	65,611 20	4,237 14 0	36 0 0	14,099 8 0	3,256	1,863	5,119
Or per mile of railway	. ..	124 1 11	.....	54 7 1	0 7 4	179 0 4	.....	.....	.....
Total for 1½ weeks ...	20,060	9,775 10 0	65,611 20	4,237 14 0	36 0 0	14,099 8 0	3,256	1,863	5,119
Comparison.									
Total for corresponding 13 days of previous year	20,350	10,057 8 2	87,747 10	6,177 7 0	23 14 9	16,258 13 11	3,580	2,562½	6,142½
Per mile of railway corresponding period of previous year	.....	127 11 2	.....	78 7 0	0 4 10	206 7 0	.....	.....	.....
Total for corresponding 1½ weeks of previous year	20,350	10,057 8 2	87,747 10	6,177 7 0	23 14 9	16,258 13 11	3,580	2,562½	6,142½

1902. *Abstract of progressive weekly returns of all earnings for 1902 in comparison with 1901.*

Open mileage.	Period.	Coaching Traffic.		Merchandise and Mineral Traffic.		Other earnings.	Total.	Per mile of railway.	Train mileage.	
		Number of passengers	Rs.	Mds.	Rs.	Rs.	Rs.	Rs.	No.	Rate. Rs. A. P.
78·76	12 days of July ...	20,060	9,776	65,612	4,238	36	14,100	179	5,119	2 12 1

Abstract of progressive weekly returns of all earnings for 1902 in comparison with 1901—concluded. *1901.*

78·76	13 days of July ...	Number of passengers. 20,350	Rs. 10,058	Mds. 87,747	Rs. 6,177	Rs. 24	Rs. 16,259	Rs. 206	No. 6,143	Rate. Rs. A. P. 2 10 4

EAST INDIAN RAILWAY.

Approximate Return of Traffic for week ended 19th July 1902 on 1,913·49 miles open.

	Coaching Traffic.		Merchandise and Mineral Traffic.		Other earnings (estimated).	Total earnings.	Traffic Train-miles run.		
	Number of passengers.	Coaching receipts.	Weight carried.	Receipts.			Coaching.	Merchandise.	Total.
		Rs. A. P.	Mds. s.	Rs. A. P. (a)	Rs. A. P.	Rs. A. P.			
Total traffic for the week ...	439,028	3,82,383 1 0	45,08,890 30	7,77,213 8 0	27,287 0 0	11,86,883 9 0	109,147	172,233	281,380
Or per mile of railway	... ...	199 13 4	..	406 2 10	14 4 2	620 4 4	... ..	.. ..	.. ...
For previous 1½ weeks of half-year	704,605	6,77,461 1 0	84,01,481 10	14,45,111 10 0	38,006 0 0	21,60,688 11 0	184,458	312,305	496,763
Total for 2½ weeks ...	1,143,633	10,59,954 2 0	1,29,10,372 0	22,22,325 2 0	65,293 0 0	33,47,572 4 0	293,605	485,538	778,143
COMPARISON.									
Total for corresponding week of previous year	385,819	3,75,644 4 6	54,41,787 20	9,82,248 4 0	19,451 3 3	13,77,343 11 9	107,134½	218,781½	325,916
Per mile of railway corresponding week of previous year	.. ...	204 6 5	.....	534 7 7	10 9 4	749 7 4	.....	.....	.....
Total for corresponding 2½ weeks of previous year	1,093,021½	11,38,217 4 6	1,58,80,178 10	28,75,039 2 5	53,487 11 10	40,66,744 2 9	305,595½	607,223	912,818½

(a) The decrease is chiefly in coal, food-grains, and seeds.

1902. *Abstract of progressive weekly returns of all earnings for 1902 in comparison with 1901.*

Open mileage.	Period.	Coaching Traffic.		Merchandise and Mineral Traffic.		Other earnings.	Total.	Per mile of railway.	Train mileage.	
		No. of passengers.	Rs.	Mds.	Rs.	Rs.	Rs.	Rs.	No.	Rate. Rs. A. P.
1,913·49	12 days of July ...	704,605	6,77,571	84,01,481	14,45,112	38,006	21,60,689	1,129	490,763	4 5 7
1,913·49	Week ended 19th ,, ...	439,028	3,82,383	45,08,891	7,77,213	27,287	11,86,883	620	281,380	4 3 6
	Totals up to date ...	1,143,633	10,59,954	1,29,10,372	22,22,325	65,293	33,47,572	645	778,143	4 4 10

Abstract of progressive weekly returns of all earnings for 1902 in comparison with 1901—concluded. *1901.*

1,837·46	12 days of July ...	707,203	7,62,573	1,04,38,391	18,92,791	34,036	26,89,400	1,464	588,902	4 9 4
1,837·79	Week ended 20th ,,	385,819	3,75,644	54,41,787	9,82,248	19,452	13,77,344	749	325,017	4 3 7
	Totals up to date ...	1,093,022	11,38,217	1,58,80,178	28,75,039	53,488	40,66,744	775	912,819	4 7 3

TARKESSUR BRANCH RAILWAY.

Approximate Return of Traffic for week ended 19th July 1902 on 22·23 miles open.

	Coaching Traffic.		Merchandise and Mineral Traffic.		Other earnings (estimated).	Total earnings.	Traffic Train-miles run.		
	Number of passengers.	Coaching receipts.	Weight carried.	Receipts.			Coaching.	Merchandise.	Total.
		Rs. A. P. (a)	Mds. s.	Rs. A. P.	Rs. A. P.	Rs. A. P.			
Total traffic for the week ...	(a) 29,831	6,623 12 0	11,762 20	413 13 0	7 0 0	7,044 9 0	1,084	104	1,188
Or per mile of railway	...	297 15 5	... ..	18 9 10	0 5 1	316 14 4	.....	.....	..
For previous 1½ weeks of half-year	38 151	9,696 3 0	16,400 20	653 7 0	12 0 0	10,361 10 0	1,886	182	2,068
Total for 2½ weeks	67,982	16,319 15 0	28,163 0	1,067 4 0	19 0 0	17,406 3 0	2,970	286	3,256
COMPARISON.									
Total for corresponding week of previous year	19,523½	4,583 3 9	5,909 20	206 15 0	8 2 0	4,808 4 9	1,107	81	1,188
Per mile of railway corresponding week of previous year	.....	203 14 9	.... .	13 6 2	0 5 10	216 4 9	.....	.....	...
Total for corresponding 2½ weeks of previous year	60,910	14,442 13 1	26,211 20	1,059 0 0	26 6 0	15,522 0 1	3,194	238	3,432

(a) The increase is due to *Ulta Rath Jatra* festival.

1902. *Abstract of progressive weekly returns of all earnings for 1902 in comparison with 1901.*

Open mileage.	Period.	Coaching Traffic.		Merchandise and Mineral Traffic.		Other earnings.	Total.	Per mile of railway.	Train mileage.	
		No. of passengers.	Rs.	Mds.	Rs.	Rs.	Rs.	Rs.	No	Rate. Rs. A. P.
22·23	12 days of July	38,151	9,696	16,401	653	12	10,361	466	2,068	5 0 2
22·23	Week ended 19th ,, ...	29,831	6,624	11,762	414	7	7,045	317	1,188	5 14 11
	Totals up to date ...	67,982	16,320	28,163	1,067	19	17,406	288	3,256	5 5 6

*Abstract of progressive weekly returns of all earnings for 1902 in comparis*n with 1901*—concluded. *1901.*

22·23	12 days of July ...	41,588	9,310	20,102	786	14	10,714	482	2,344	4 12 5
22·23	Week ended 20th ,,	19,523	4,733	5,910	267	8	4,808	216	1,188	4 0 9
	Totals up to date ...	60,910	14,443	26,212	1,053	26	15,522	244	3,432	4 8 4

DELHI-UMBALLA-KALKA RAILWAY.

Approximate Return of Traffic for week ended 19th July 1902 on 162·24 miles open.

	Coaching Traffic.		Merchandise and Mineral Traffic.		Other earnings (estimated).	Total earnings.	Traffic Train-miles run.		
	Number of passengers.	Coaching receipts.	Weight carried.	Receipts.			Coaching.	Merchandise.	Total.
		Rs. A. P.	Mds. s.	Rs. A. P.	Rs. A. P.	Rs. A. P.			
Total traffic for the week ..	22,810	18,458 14 0	97,123 30	8,972 2 0	54 0 0	27,485 0 0	8,311	4,249	12,560
Or per mile of railway ..	.....	113 12 5	.....	55 4 10	0 5 4	169 6 7	.....	.....	.....
For previous 1½ weeks of half-year	38,150	28,888 0 0	1,46,155 20	17,776 1 0	84 0 0	46,708 1 0	14,400	7,304	21,704
Total for 2½ weeks ..	60,960	47,346 14 0	2,43,279 10	26,768 3 0	138 0 0	74,253 1 0	22,711	11,453	34,164
Comparison.									
Total for corresponding week of previous year	23,979	17,601 11 10	88,131 0	10,705 1 0	48 14 0	28,555 10 10	8,082½	3,628½	11,711
Per mile of railway corresponding week of previous year	.....	109 11 7	.....	65 15 9	0 4 10	176 0 2	.....	.....	.....
Total for corresponding 2½ weeks of previous year	65,362	4[illegible],993 8 2	4,03,930 30	41,446 13 0	131 0 9	90,573 5 11	22,787½	10,868	33,655½

1902. *Abstract of progressive weekly returns of all earnings for 1902 in comparison with 1901.*

Open mileage.	Period.	Coaching Traffic.		Merchandise and Mineral Traffic.		Other earnings.	Total.	Per mile of railway.	Train mileage.	
		No. of passengers.	Rs.	Mds.	Rs	Rs.	Rs	Rs.	No.	Rate. Rs. A. P.
162·24	12 days of July ...	38,150	28,888	1,46,156	17,796	84	46,768	288	21,804	2 2 8
162·24	Week ended 19th ,, ...	22,810	18,459	97,123	8,972	54	27,485	169	12,360	2 3 0
	Totals up to date ...	60,960	47,347	2,43,279	26,768	138	74,253	169	34,164	2 2 9

Abstract of progressive weekly returns of all earnings for 1903 in comparison with 1901—concluded. *1901.*

		No. of passengers.	Rs.	Mds.	Rs.	Rs.	Rs.	Rs.	No.	Rate. Rs. A. P.
162·24	13 days of July ...	41,383	31,192	3 15,809	30,744	82	62,018	382	21,945	2 13 3
162·24	Week ended 20th ,, ...	23,979	17,801	88,131	10,705	49	28,555	176	11,711	2 7 0
	Totals up to date ...	65,362	48,993	4,03,940	41,449	131	90,573	195	33,656	2 11 1

SOUTH BEHAR RAILWAY.

Approximate Return of Traffic for week ended 19th July 1902 on 78·76 miles open.

	Coaching Traffic.		Merchandise and Mineral Traffic.		Other earnings (estimated).	Total earnings.	Traffic Train-miles run.		
	Number of passengers.	Coaching receipts.	Weight carried.	Receipts.			Coaching.	Merchandise.	Total.
		Rs. A. P.	Mds. s.	Rs. A. P.	Rs. A. P.	Rs. A. P.			
Total traffic for the week	11,624	6,637 3 0	38,848 0	1,771 9 0	18 0 0	8,426 12 0	1,909	690	2,599
Or per mile of railway	.....	84 4 4	.....	22 7 11	0 3 8	106 15 11	.....	.....	.....
For previous 1½ weeks of half-year	20,060	9,775 10 0	65,011 20	4,287 14 0	36 0 0	14,099 8 0	3,256	1,863	5,119
Total for 2½ weeks ...	31,684	16,413 13 0	1,04,460 20	6,059 7 0	54 0 0	22,526 4 0	5,165	2,553	7,718
Comparison.									
Total for corresponding week of previous year.	12,298	5,865 11 0	50,235 30	3,120 5 0	8 0 6	8,994 0 6	2,034	1,273½	3,307½
Per mile of railway corresponding week of previous year.	.....	74 7 7	.....	39 9 11	0 1 8	114 3 2	.....	.....	...
Total for corresponding 2½ weeks of previous year.	32,648	15,923 3 2	1,37,983 0	9,207 12 0	31 15 3	25,252 14 5	5,614	3,836	9,450

1902. *Abstract of progressive weekly returns of all earnings for 1902 in comparison with 1901.*

Open mileage.	Period.	Coaching Traffic.		Merchandise and Mineral Traffic.		Other earnings.	Total.	Per mile of railway.	Train mileage.	
		No. of Passengers.	Rs	Mds.	Rs.	Rs.	Rs.	Rs.	No.	Rate. Rs. A. P.
78·76	12 days of July ..	20,060	9,776	65,012	4,288	36	14,100	179	5,119	2 12 1
8·76	Week ended 19th ,, .	11,624	6,637	38,848	1,771	18	8,426	107	2,599	3 3 11
	Totals up to date ..	31,684	16,413	1,04,460	6,059	54	22,526	10	7,718	2 14 8

Abstract of progressive weekly returns of all earnings for 1902 in comparison with 1901—concluded. *1901.*

		No. of Passengers.	Rs.	Mds.	Rs.	Rs.	Rs	Rs.	No.	Rate. Rs. A. P.
78·76	13 days of July ...	20,350	10,058	87,747	6,177	24	16,259	206	6,143	2 10 6
78·76	Week ended 20th ,, ...	12,298	5,865	50,236	3,121	8	8,994	114	3,307	2 11 8
	Totals up to date	32,648	15,923	1,37,983	9,298	32	25,253	112	9,450	2 10 9

ASSAM-BENGAL RAILWAY.

Approximate Return of Traffic for the week ended 19th July 1902 on 558 miles open for all descriptions of traffic, and an additional 31 miles for goods and parcels traffic only.

	Coaching Traffic.		Merchandise and Mineral Traffic.		Other earnings.	Total earnings.	Traffic Train-miles run.		
	No. of passengers.	Coaching receipts.	Weight carried.	Receipts.			Coaching.	Merchandise.	Total.
		Rs. A. P.	Mds. s.	Rs. A. P.	Rs. A. P.	Rs. A. P.			
Total traffic for the week ...	28,335	15,948 0 0	1,62,740 0	16,320 0 0	1,115 0 0	33,380 0 0	6,586	9,317	15,903
Or per mile of railway	50·76	28·58	310·27	27·71	1·89	59·18	11·80	15·82	27 62
For previous 2 weeks of half-year	57,529	32,446 0 0	2,74,465 0	24,832 0 0	2,686 0 0	59,964 0 0	11,547	14,072	25,619
Total for 3 weeks ...	85,864	48,301 0 0	4,57,214 0	41,152 0 0	3,801 0 0	93,344 0 0	18,133	23,389	41,522
COMPARISON.									
Total for corresponding week of previous year	31,098	20,198 0 0	1,12,509 0	15,798 0 0	2,368 0 0	38,364 0 0	6,854	5,381	12,235
Per mile of railway corresponding week of previous year ..	56·81	36·20	194·65	27·33	4·10	67·63	12·28	9 31	21·59
Total to corresponding date of previous year	82,702	50,050 0 0	3,60,180 0	50,256 0 0	6,729 0 0	1,07,035 0 0	18,659	18,060	36,728

FINANCIAL YEAR.

Approximate Statement of Gross Receipt of the Assam-Bengal Railway.

Receipts for week ending 19th July 1902.			Receipts for the week ending 20th July 1901.			Total receipts from 1st April 1902 to 19th July 1902.			Total receipts from 1st April 1901 to 20th July 1901.			Total increase in 1902.	Total decrease in 1902.
Mean mileage worked.	Receipts.	Per mile worked.	Mean mileage worked.	Receipts.	Per mile worked.	Mean mileage worked.	Total receipts.	Per mile worked.	Mean mileage worked	Total receipts.	Per mile worked		
	Rs.	Rs.		Rs.	Rs.		Rs.			Rs.		Rs.	Rs.
589	33,380	56·18	578	39,364	67·63	589	5,82,225	...	578	6,27,833	...	.. ..	45,608

SEGOWLIE-RAKSAUL BRANCH RAILWAY.

(Worked by the B. & N.-W. Railway.)

Audited Return of Traffic for week ending 7th June 1902 on 18 miles open.

	Coaching Traffic.		Merchandise and Mineral Traffic.		Other earnings.	Total earnings.	Traffic Train-miles run.		
	Passengers carried.	Receipts.	Weight carried.	Receipts.			Coaching.	Merchandise.	Total.
	No.	Rs. A. P.	Mds.	Rs. A. P.	Rs. A. P.	Rs. A. P.			
Total traffic for the week on 18 miles open	2,406	360 5 0	26,498	567 4 6	15 1 0	942 10 6	325	179	504
Or per mile of railway	133·67	20 0 3	1,472·11	31 8 3	0 13 5	52 5 11	.....	.....	.....
For previous 21¼ weeks of half-year	56,519	9,642 7 0	2,62,661	6,806 12 7	825 15 0	17,275 2 7	8,086	2,822	10,908
Total for 23¼ weeks ...	58,925	10,002 12 0	2,89,159	7,374 1 1	841 0 0	18,217 13 1	8,411	3,001	11,412
COMPARISON.									
Total for corresponding week of previous year on 18 miles open	2,231	376 9 7	25,210	713 14 5	15 12 0	1,106 4 0	334	170	504
Per mile of railway corresponding week of previous year ...	125·06	20 14 9	1,400·56	39 10 7	0 14 0	61 7 4	.....	.....	.....
Total to corresponding date of previous year	46,669	7,796 4 3	3,11,239	8,020 11 10	760 10 0	17,477 10 1	8,255	2,734	10,989

DARJEELING-HIMALAYAN RAILWAY COMPANY, LIMITED.

		Rs. A. P.	Rs. A. P.
Approximate earnings for the week ending 26th July 1902 ...	Coaching ...	3,983 0 0	
	Goods ...	9,691 0 0	13,744 0 0
	Other earnings ...	70 0 0	
Audited earnings for the corresponding period of 1901 ...	Coaching ...	4,584 0 0	
	Goods ...	8,673 0 0	13,286 0 0
	Other earnings ...	29 0 0	
	Increase ...		458 0 0
Receipts per mile for the week ending 26th July 1902			269 7 10
Ditto for the corresponding period of 1901			260 8 2
	Increase ...		8 15 8
Receipts from 1st July to 26th July 1902			57,459 0 0
Ditto for the corresponding period of 1901			56,472 0 0
	Increase ...		987 0 0

Printed at the Printing Office, and published by the Book Depôt, of the Bengal Secretariat, Writers' Buildings, in the City of Calcutta, on 6th August 1902.

REGISTERED No. C209.]

No. 33 of 1902.

The Calcutta Gazette.

WEDNESDAY, AUGUST 13, 1902.

CONTENTS.

	Page
PART I.—Orders and Notifications by the Lieutenant-Governor of Bengal, the High Court, Government Treasury, &c.	1101—1123
PART IA.—Orders and Notifications by the Government of India	129—130
PART IB.—Orders by the Lieutenant-Governor of Bengal	153—157
PART II.—Advertisements	985—1009
PART III.—Acts of the Bengal Council	Nil
PART IV.—Bills of the Bengal Council:—	
A Bill to validate certain transfers, made under the Bengal Tenancy Act, 1885, of shares in permanent tenures and shares in holdings at fixed rents or fixed rates; and to amend sections 18 and 106 of that Act	19—21
PART IVA.—Proceedings of the Bengal Legislative Council	Nil
PART V.—Acts of the Governor-General's Council assented to by the Governor-General .. .	Nil
PART VI.—Bills introduced into the Council of the Governor-General for making Laws and Regulations or published under Rule 23	Nil
APPENDIX.—Marine Notifications	307—316
SUPPLEMENT No. 33:—	
Resolution on the Annual Report of the Civil Veterinary Department, Bengal, and of the Bengal Veterinary College ...	1145
Liberality of Mahanta Sumeru Giri Gossain of Mahigunge	1147
Statistical Return of Crops, Circular and Eastern Canal, Results of Meteorological Observations, Railway Traffic Receipts, &c., &c.	1148—1158

PART I

Orders and Notifications by the Lieutenant-Governor of Bengal, the High Court, Government Treasury, &c.

ORDERS BY THE LIEUT.-GOVERNOR OF BENGAL.

TOUR OF HIS HONOUR THE LIEUTENANT-GOVERNOR OF BENGAL DURING AUGUST 1902.

Miles.	Day of the— Week.	Day of the— Month.	Places.	Railway time.	Remarks.
	Monday	Aug. 11th	Calcutta ... dep.	19-0	By special train from Howrah (7-33 P.M. local time). Dinner in train. Private departure.
	Tuesday	,, 12th	Rae Bareili { arr.	14-15	
			{ dep.	17-0	
666			Lucknow ... arr.	18-30	His Honour will stay with His Honour the Lieutenant-Governor of the United Provinces of Agra and Oudh.
	Wednesday	,, 13th	{ Halt.		
	Thursday	,, 14th			
	Friday	,, 15th	Lucknow ... dep.	13-0	By special train. Lunch in train.

Miles.	Day of the— Week.	Month.	Places.	Railway time.	Remarks.
77			Fyzabad ... arr.	16-15	
	Saturday	Aug. 16th	Do. ... dep.	20-0	By special train. Dinner in train.
319	Sunday	„ 17th	Mokamah Ghat. arr.	8-0	Early tea.
			Mokamah Ghat. dep.	8-10	By special steamer.
			Semaria Ghat arr.	8-50	
			Semaria Ghat dep	9-0	By special train. Breakfast and luncheon in train.
106			Pipra ... arr	13-0	
			Pipra ... dep.	16-30	
61			Darbhanga... arr.	20-0	Private arrival.
	Monday	„ 18th	Halt.		
	Tuesday	„ 19th	Darbhanga... dep.	6-20	By special train.
61			Semaria Ghat arr.	8-20	
			Semaria Ghat dep.	8-35	By special steamer.
			Mokamah Ghat. arr	9-20	
			Mokamah Ghat. dep.	9-40	By special train. Breakfast in train.
546	Wednesday	„ 20th	Bhubaneshwar. arr.	6-0	
			Bhubaneshwar. dep.	9-20	Breakfast in train.
			Cuttack ... arr.	10-0	Public arrival.
270	Thursday	„ 21st	Do. ... dep.	8-45	Breakfast in train.
			Calcutta ... arr.	18-0	Howrah (6-33 P M. local time). Private arrival.
2,106					

NOTE.—The party accompanying His Honour will be—

Major Strachey, Private Secretary...
Captain Bignell, A.-D.-C. ...
The Sub-Postmaster of the Lieutenant-Governor's Camp, Bengal, Post Office ... ...
About 12 servants ... ...
} Throughout the tour.

NOTES.—The departure from and arrival at Calcutta will be private, but the usual salutes will be fired.

Letters and telegrams should be addressed "*Lieutenant-Governor's Camp, Bengal,*" without the addition of any post town.

By order,

CALCUTTA, *The 7th August 1902.*

J. STRACHEY, MAJOR,
Private Secy. to the Lieut.-Governor of Bengal.

No. 3683A.

APPOINTMENTS AND TRANSFERS.

GENERAL.—*No. 3390A.—The 7th August 1902.*—Mr. S. R. Hignell, Assistant Magistrate and Collector, is appointed to act, until further orders, in the first grade of Joint-Magistrates and Deputy Collectors, on being relieved of his appointment as Officiating Under-Secretary to the Government of Bengal, Judicial, Political and Appointment Departments.

No. 3473A.—The 8th August 1902.—Babu Basanta Krishna Bose, Deputy Magistrate and Deputy Collector, Monghyr, is appointed to act as Personal Assistant to the Commissioner of the Chota Nagpur Division, during the absence, on leave, of Babu Krishna Kali Mookerjee, or until further orders.

Monghyr. Ranchi.

No. 3475A.—The 8th August 1902.—Babu Rai Krishna Bahadur, Deputy Magistrate and Deputy Collector, on leave, is posted to the head-quarters station of the Monghyr district.

Monghyr.

No. 3478A.—The 8th August 1902.—Mr. Atul Krishna Ray, Deputy Magistrate and Deputy Collector, on leave, is posted to the head-quarters station of the district of Burdwan.

Burdwan.

Nos. 3531-32A.—The 12th August 1902.—The following Probationary Deputy Collectors are posted to the head-quarters stations of the districts mentioned opposite their names :—

Rajshahi.	Babu Sures Chunder Ghatak, M.A.	...	Rajshahi.
Jessore.	,, Jatindra Mohun Banerjee, B.A.	...	Jessore.

No. 3548A.—The 12th August 1902.—Babu Haripada Ghosh, Deputy Magistrate and Deputy Collector, Manbhum, is transferred to the head-quarters station of the Faridpur district.

Manbhum. Faridpur.

This cancels the order of the 15th July 1902, transferring Mr. H. L. Fell, substantive *pro tempore* Deputy Magistrate and Deputy Collector, Purnea, to Faridpur.

Purnea.

VOLUNTEERS.—*No. 3517A.—The 11th August 1902.*—The Lieutenant-Governor is pleased to appoint Mr. Andrew Marks to be an Honorary Lieutenant in the Calcutta Volunteer Rifles, with effect from the 10th June 1902.

POLICE.—*No. 3491A.—The 11th August 1902.*—Mr. F. C. Swaine, Probationary Assistant Superintendent of Police, Backergunge, is transferred temporarily to Champaran.

Backergunge. Champaran.

ECCLESIASTICAL.—*No. 3383A.—The 6th August 1902.*—The Revd. T. Scott, Officiating Senior Chaplain of St. Andrew's Church, Calcutta, is confirmed in that appointment, with effect from the 28th July 1902.

Calcutta.

PROMOTIONS.

EDUCATION.—*No. 3539A.—The 12th August 1902.*—The following promotions and confirmations are sanctioned in the Provincial Educational Service, with effect from the 8th August 1902 :—

Promoted to Class III.

Mr. E. Pegler, *vice* Babu Jagat Bandhu Laha, retired.

Promoted to Class IV.

Mr. H. A. Stark, *vice* Mr. E. Pegler.

Confirmed in Class V.

Babu Raj Kumar Sen, *vice* Mr. H. A. Stark.

Promoted substantively pro tempore *to Class V.*

Maulvi Abdul Munim, *vice* Babu Raj Kumar Sen.

Confirmed in Class VI.

Babu Hari Das Banerjea, *vice* Babu Raj Kumar Sen.

Promoted substantively pro tempore *to Class VI.*

Babu Báladéva Ramá Jhá, *vice* Babu Hari Das Banerjea.

Confirmed in Class VII.

Babu Bidhu Bhushan Goswami, *vice* Babu Hari Das Banerjea.

Promoted substantively pro tempore *to Class VII.*

Babu Pramatha Nath Mukerjea, *vice* Babu Bidhu Bhushan Goswami.

LEAVE.

GENERAL—*No. 3441A.—The 7th August 1902.*—Mr. W. H. H. Vincent, District and Sessions Judge, Bhagalpur, is allowed leave for three months, under article 291 of the Civil Service Regulations, with effect from the 7th August 1902.

Bhagalpur.

No. 3446A.—The 7th August 1902.—Babu Ram Anugrah Narayan Singh, Deputy Magistrate and Deputy Collector, Patna, under orders of transfer to Muzaffarpur, is allowed leave for three months, under article 291 of the Civil Service Regulations, with effect from the date on which he may avail himself of it.

Patna. Muzaffarpur.

No. 3469A.—The 8th August 1902.—Mr. E. A. Oakley, substantive *pro tempore* Deputy Magistrate and Deputy Collector, Burdwan, is allowed leave for one month, under article 369 (1) of the Civil Service Regulations, with effect from the 24th July 1902.

Burdwan.

No. 3471A.—The 8th August 1902.—Babu Krishna Kali Mookerjee, Personal Assistant to the Commissioner of Chota Nagpur, is allowed combined leave for one year, viz., privilege leave for three months under article 264A of the Civil Service Regulations, and furlough for the remaining period under article 371 of the Regulations, with effect from the date on which he may be relieved.

Ranchi.

No. 3493A.—The 11th August 1902.—Rai Mohendro Nath Gupta Bahadur, Deputy Magistrate and Deputy Collector, 24-Parganas, is allowed leave for three months, under articles 291 and 377 of the Civil Service Regulations, with effect from the 29th July 1902.

24-Parganas.

No. 3536A.—The 12th August 1902.—Babu Nobin Chunder Sen, Deputy Magistrate and Deputy Collector, is allowed furlough for one year, under article 371 of the Civil Service Regulations, in extension of the leave granted to him under the order of the 7th January 1902.

VOLUNTEERS.—*No. 3466A.—The 8th August 1902.*—Captain L. C. Baines, Calcutta Light Horse, has been granted, by the General Officer Commanding the Presidency District, leave of absence for six months, with effect from the 25th July 1902.

No. 3467A.—The 8th August 1902.—Major the Hon'ble R. Harington, Calcutta Port Defence Volunteers, has been granted, by the General Officer Commanding the Presidency District, leave of absence for three months and fifteen days, with effect from the 5th August 1902.

POLICE.—*No. 3468A.—The 8th August 1902.*—Mr. H. E. C. Paget, District Superintendent of Police, has been granted by His Majesty's Secretary of State for India a further extension of furlough, on medical certificate, for three months.

No. 3542A.—The 12th August 1902.—Mr. R. E. Bradley, Officiating District Superintendent of Police, Rangpur, is allowed privilege leave for one month, under the Resolution of the Government of India, Finance and Commerce Department, No. 5047P., dated the 15th November 1897, with effect from the 18th August 1902.

Rangpur.

POWERS.

GENERAL.—*No. 3488A.—The 11th August 1902.*—Babu Kunja Behari Goswami, Deputy Collector, Bogra, is vested with the powers of a Collector under Act I of 1894 in that district.

Bogra.

No. 3523A.—The 11th August 1902.—Babu Ashutosh Chatterjee, Deputy Collector, Chittagong, is vested with the powers of a Collector, under Act I of 1894, in that district.

Chittagong.

REGISTRATION.—*No. 3510A.—The 11th August 1902.*—Babu Ashutosh Bagchi, Deputy Magistrate and Deputy Collector, Siliguri, Darjeeling, is vested with the powers of a Sub-Registrar.

Darjeeling.

C. E. BUCKLAND,
Chief Secy. to the Govt. of Bengal.

NOTIFICATION—No. 3393A.

The 7th August 1902.—With reference to the notification of this Government, dated the 19th July 1902, it is hereby notified that the examination of candidates for recruiting the staff of the superior Police Officers in Bengal and Assam will be held at the Bengal Secretariat, Writers' Buildings, Calcutta, on the dates and at the hours mentioned below :—

10th November 1902.		11th November 1902.		12th November 1902.		13th November 1902.		14th November 1902.	
10-30 A.M. to 1 P.M.	1-30 P.M. to 4 P.M.	10-30 A.M. to 1 P.M.	1-30 P.M. to 4 P.M.	10-30 A.M. to 1 P.M.	1-30 P.M. to 4 P.M.	10-30 A.M. to 1 P.M.	1-30 P.M. to 4 P.M.	10-30 A.M. to 1 P.M.	1-30 P.M. to 4 P.M.
1	2	3	4	5	6	7	8	9	10
English Composition.	Arithmetic	Algebra, Trigonometry, and Mensuration.	Euclid ...	English History.	English Literature.	Indian History.	Geography	First language.	Second language.

C. E. BUCKLAND,
Chief Secy. to the Govt. of Bengal.

REVENUE DEPARTMENT—(FORESTS).

NOTIFICATION—No. 3089For.

The 6th August 1902.—The services of Babu Gopal Chandra Mitra, a Deputy Ranger in the Sunderbans Forest Division, have been dispensed with from the 20th November 1901.

Khulna.

W. C. MACPHERSON,
Offg. Secy. to the Govt. of Bengal.

REVENUE DEPARTMENT—(LAND REVENUE).

NOTIFICATION—No. 3045L.R.

The 6th August 1902.—Babu Rampada Chatterji, Assistant Settlement Officer, North Bihar, is granted privilege leave for one month, under article 273 (*a*) of the Civil Service Regulations, with effect from the 8th August 1902, or any subsequent date on which he may avail himself of it.

Darbhanga.
Monghyr.
Purnea.

W. C. MACPHERSON,
Offg. Secy. to the Govt. of Bengal.

NOTIFICATION—No. 3126L.R.

The 12th August 1902.—Whereas an application has been made by the owners of patni tenure Debsa-Chandni, appertaining to estate Vishnupur, bearing tauzi No. 1 in the district of Bankura, for a survey and preparation of a record-of-rights in respect of all lands situated in the said tenure, and whereas they have agreed to deposit the cost of the operations:

Bankura.

In exercise of the powers conferred by section 101 (2) (*a*) of the Bengal Tenancy Act, VIII of 1885, as amended by Act III (B.C.) of 1898, the Lieutenant-Governor of Bengal is pleased to direct that a survey shall be made and a record-of-rights prepared in respect of all the lands situated within the external boundaries of the said tenure in the district of Bankura.

The particulars to be recorded in the survey and record of rights shall be the following:—

(*a*) The name of each tenant or occupant.

(*b*) The class to which each tenant belongs, that is to say, whether he is a tenure-holder, raiyat holding at fixed rates, settled raiyat, occupancy raiyat, non-occupancy raiyat or under-raiyat, and if he is a tenure-holder, whether he is a permanent tenure-holder or not, and whether his rent is liable to enhancement during the continuance of his tenure.

(*c*) The situation, quantity and one or more of the boundaries of the land held by each tenant or occupier.

(*d*) The name of each tenant's landlord.

(*e*) The money rent payable at the time the record of rights is being prepared, or if a produce rent, the fact that produce rent is paid.

(*f*) The mode in which that rent has been fixed, whether by contract, by order of a Court or otherwise.

(*g*) If the rent is a gradually increasing rent, the time at which, and the steps by which, it increases.

(*h*) The special conditions and incidents, if any, of the tenancy.

(*i*) If the land is claimed to be held rent-free, whether or not rent is actually paid, and if not paid, whether or not the occupant is entitled to hold the land without payment of rents, and if so entitled, under what authority.

(*j*) The name of each proprietor, with the character and extent of his interest, and the situation, quantity, and one or more of the boundaries of the proprietor's private lands, as defined in Chapter XI of the Act.

W. C. MACPHERSON,
Offg. Secy. to the Govt. of Bengal.

NOTIFICATION—No. 3138L.R.

The 12th August 1902.—Whereas an application has been made by the proprietors of Kaimi Taluq, Syam Sundar Birti, in chakla Banchanagar, bearing tauzi No. 215, in the district of Noakhali, for a survey and preparation of a record of rights in respect of all lands situated in the Taluq, and whereas they have agreed to deposit the cost of the operations:

Noakhali.

The Lieutenant-Governor, in exercise of the powers conferred by section 101 (2) (*a*) of the Bengal Tenancy Act, VIII of 1885, as amended by Act III (B.C.) of 1898, is pleased to order that a survey shall be made and a record of rights be prepared in respect of all the lands contained in mauza Banchanagar in estate known as Kaimi Taluq, Syam Sundar Birti in chakla Banchanagar, bearing tauzi No. 215 in the district of Noakhali.

The particulars to be recorded in the survey and record of rights shall be the following:—

(*a*) The name of each tenant or occupant.

(*b*) The class to which each tenant belongs, that is to say, whether he is a tenure-holder, raiyat holding at fixed rates, settled raiyat, occupancy raiyat, non-occupancy raiyat or under-raiyat; and if he is a tenure-holder, whether he is a permanent tenure-holder or not, and whether his rent is liable to enhancement during the continuance of his tenure.

(*c*) The situation and quantity and one or more of the boundaries of the land held by each tenant or occupier.
(*d*) The name of each tenant's landlord.
(*e*) The money rent payable at the time the record of rights is being prepared, or if a produce rent, the fact that produce rent is paid.
(*f*) The mode in which that rent has been fixed, whether by contract, by order of a Court, or otherwise.
(*g*) If the rent is a gradually increasing rent, the time at which, and the steps by which, it increases.
(*h*) The special conditions and incidents, if any, of the tenancy.
(*i*) If the land is claimed to be held rent-free, whether or not rent is actually paid, and, if not paid, whether or not the occupant is entitled to hold the land without payment of rents, and, if so entitled, under what authority.
(*j*) The name of each proprietor, with the character and extent of his interest, and the situation, quantity, and one or more of the boundaries of the proprietor's private lands, as defined in Chapter XI of the Act.

W. C. MACPHERSON,
Offg. Secy. to the Govt. of Bengal.

NOTIFICATION.

UNDER the provisions of section 2, Act VI of 1876, as amended by Act V of 1884,

Ranchi. Babu Tripura Charan Roy, Manager of the Wards' and Encumbered Estates in the district of Ranchi, is appointed to be the Manager, and the management is vested in him, of the undermentioned immoveable property of Thakur Balaram Singh, of Sonahatu, in the district of Ranchi, and of any other immoveable property, to which the said holder is entitled in his own right, or which he is entitled to redeem, or which may be acquired by or devolve on him or his heirs during the continuance of such management:—

Name of estate.	Name of holder.
Sonahatu estate, consisting of thirteen entire villages and halves of three villages in the district of Ranchi.	Thakur Balaram Singh, of Sonahatu.

F. A. SLACKE, *Offg. Commissioner.*

COMMR.'S OFFICE, CAMP HAZARIBAGH, *the 24th July 1902.*

FINANCIAL DEPARTMENT.

NOTIFICATIONS.

No. 3859S.R.—The 12th August 1902.—Babu Kunja Behari Goswami, Deputy

Bogra. Collector, is appointed Deputy Collector of Income-tax in the district of Bogra, *vice* Babu Khirode Chandra Sen, and under section 40 of Act II of 1886 is vested with the powers of a Collector under the Act.

No. 3872S.R.—The 12th August 1902.—It is hereby notified, for the information of salt

Khulna. dealers and merchants, that, under the provisions of section XI of the Bengal Salt Act, VII of 1864, the Lieutenant-Governor is pleased to direct that Khulna, in the district of Khulna, shall be included in the list of pass-stations given in section III, page 38 of the Salt Manual.

No. 3889F.—The 12th August 1902.—Rai Surendra Nath Mitra Bahadur, B.A.,

Calcutta. Registrar of the Financial, Municipal and Accounts Departments, Bengal Secretariat, is granted privilege leave, under article 291 of the Civil Service Regulations, for two months and four days, with effect from 1st August 1902.

No. 3890F.—The 12th August 1902.—Mr. M. F. Oonvala, Head Assistant, Financial

Calcutta. Department, Separate Revenue and Miscellaneous Branches, is appointed to officiate as Registrar of the Financial, Municipal and Accounts Departments, Bengal Secretariat, during the absence, on leave, of Rai Surendra Nath Mitra Bahadur, B.A., or until further orders.

No. 3953S.R.—The 12th August 1902.—The following rule is substituted for rule V of the rules framed under section 74 of the Indian Stamp Act (II of 1899) for regulating the supply and sale of stamps and stamped papers, the persons by whom alone such sale is to be conducted, and the duties and remuneration of such persons, and published under Notification No. 4202S.R., dated the 14th August 1900, at page 897 of Part I of the *Calcutta Gazette* of the 15th idem :—

"V. Subject to rule VI, every licensed vendor who purchases from Government, by payment of ready money, stamps embossed or engraved on stamped paper, and adhesive stamps, shall receive the same at a discount at the following rates :—

	At places where stamps are sold by Government.	At other places.
	Per cent.	Per cent.
	Rs. A. P.	Rs. A. P.
Non-judicial stamps.		
Adhesive—		
One-anna revenue labels	6 4 0	6 4 0
Other stamps not exceeding in value eight annas each.	4 11 0	6 4 0
Exceeding eight annas, but not exceeding Rs. 5 each	2 9 8	3 2 0
Exceeding Rs. 5, but not exceeding Rs. 50 each	1 9 0	1 9 0
Impressed—		
Hundi stamps	4 11 0	6 4 0
Impressed stamp papers		

The rates of Rs. 4-11 and Rs. 2-9-8 per cent., which are included in the first of the two scales prescribed, shall in Calcutta be reduced to Rs. 3-2 per cent. and Re. 1-9 per cent., respectively. The same reduction shall be made in the added municipal area of Calcutta, comprising Ballyganj and parts of Tallyganj, Bhowanipore, and parts of Alipore, Ekbalpur and Watganj as defined in Schedule III, Act III (B.C.) of 1899, the South Suburban Municipality, and the Municipalities of Garden Reach, Manicktola, Cossipore-Chitpur, Baranagore and Bally, in Patna City, in the towns of Gaya, Chapra, Darbhanga, Dacca, Bhagalpur, Monghyr and Cuttack, and in the Sadar stations of the districts of Howrah, the 24-Parganas and Hooghly.

E. W. COLLIN,
Offg. Secy. to the Govt. of Bengal.

MEDICAL DEPARTMENT.

No. 2215Medl.—The 11th August 1902.—Lieutenant-Colonel R. Macrae, I.M.S., has been granted by His Majesty's Secretary of State for India an extension of leave on medical certificate for two months.

E. W. COLLIN,
Offg. Secy. to the Govt. of Bengal.

JUDICIAL DEPARTMENT

No. 3684A.

APPOINTMENTS AND TRANSFERS.

No. 3458A.—The 8th August 1902.—Babu Taruk Chandra Dass, Munsif of Goalundo, in the district of Faridpur, is appointed to be a Munsif in the district of Rangpur, to be ordinarily stationed at Gaibanda, and is vested with the powers of a Judge of a Court of Small Causes for the trial of suits cognizable by such a Court up to the value of Rs. 100, and with the functions of a District Court, under section 26, sub-section (1) of Act VII of 1889, within the local limits of the Gaibanda Munsifi.

Faridpur.
Rangpur.

No. 3460A.—The 8th August 1902.—Babu Jotindra Chandra Sen, Munsif of Gaibanda, in the district of Rangpur, who has been granted leave, is appointed to be a Munsif in the district of Faridpur, to be ordinarily stationed at Goalundo.

Rangpur
Faridpur.

No. 3464A.—The 8th August 1902.—Babu Saroj Mohan Das Gupta, B.L., is appointed to act as a Munsif in the district of Faridpur, to be ordinarily stationed at Goalundo, during the absence, on leave, of Babu Jotindra Chandra Sen, or until further orders.

Faridpur.

No. 3482A.—The 8th August 1902.—Babu Bipradas Chatterji, Subordinate Judge, Tirhut, on leave, is appointed to be Subordinate Judge of Birbhum, and is vested with the powers of a Judge of a Court of Small Causes for the trial of suits cognizable by such a Court up to the value of Rs. 500, within the local limits of the Suri Munsifi.

Tirhut.
Birbhum.

No. 3485A.—The 8th August 1902.—Babu Syam Chand Ray, Subordinate Judge, Birbhum, is appointed to be Subordinate Judge of Tirhut, and is vested with the powers of a Judge of a Court of Small Causes for the trial of suits cognizable by such a Court up to the value of Rs. 500, and is also appointed to perform the functions of a Court, under section 3, clause (*d*) of the Land Acquisition Act, I of 1894, within the local limits of the Muzaffarpur Munsifi.

Birbhum.
Tirhut.

No. 3521A.—The 11th August 1902.—Babu Manmatha Nath Mallik, M.A., B.L., is appointed to act, until further orders, as an Additional Munsif in the district of Tirhut, to be ordinarily stationed at Madhubani.

Tirhut.

No. 3526A.—The 11th August 1902.—Babu Sukumar Bhattacharji, Munsif of Munshiganj, Dacca, on leave, is appointed to be a Munsif in Chota Nagpur, to be ordinarily stationed at Giridih, and is vested with the powers of a Court of Small Causes for the trial of suits cognizable by such a Court up to the value of Rs. 100, within the local limits of the Giridih Munsifi.

Dacca.
Chota Nagpur.

No. 3529A.—The 11th August 1902.—Maulvi Osman Ali, Officiating Munsif of Giridih, in Chota Nagpur, is appointed to be a substantive *pro tempore* Additional Munsif in the district of Mymensingh, to be ordinarily stationed at the Sadar station.

Chota Nagpur.
Mymensingh.

No. 3544A.—The 12th August 1902.—Babu Behari Lal Sarkar, B.L., is appointed to act as a Munsif in the district of the 24-Parganas, to be ordinarily stationed at Barasat, during the absence, on leave, of Babu Surjo Narain Dass, or until further orders.

24-Parganas.

No. 3496J.—The 11th August 1902.—Mr. Arthur Stowey Bailey is re-appointed to be an Honorary Magistrate of the Independent Bench at Jamalpur, in the district of Monghyr.

Monghyr.

No. 3572J.—The 11th August 1902.—Babu Kali Kumar Misra is appointed to be an Honorary Magistrate of the Independent Bench at Raniganj, in the district of Burdwan.

Burdwan.

No. 3579J.—The 11th August 1902.—Babu Harihar Prasad Singh is appointed to be an Honorary Magistrate of the Independent Bench at Dumraon, in the district of Shahabad.

Shahabad.

No. 3582J.—The 11th August 1902.—Babu Satkouri Chandra Ghosh is appointed to be an Honorary Magistrate of the Independent Bench at Suri, in the district of Birbhum.

Birbhum.

No. 3599J.—The 12th August 1902.—Mr. Graham Peddie is re-appointed to be an Honorary Magistrate of the Independent Bench at Sahibganj, in the district of the Sonthal Parganas.

Sonthal Parganas.

PROMOTIONS.

No. 3557A.—The 12th August 1902.—His Majesty's Secretary of State for India having sanctioned a reorganization of the Judicial Branch of the Provincial Civil Service in Bengal, the following promotions and confirmations are sanctioned in that branch with effect from the 31st March 1902, the date on which His Lordship's sanction was received by the Government of India:—

Promoted to the first grade of Subordinate Judges.

Babu Mohim Chandra Ghose.

Promoted to the second grade of Subordinate Judges.

Babu Jadupati Banerji.
„ Bipin Behari Mukerji.

Confirmed in the third grade of Subordinate Judges.

Babu Tara Charan Sen.
„ Purna Chundra Banerji.
„ Dina Nath Sarkar.
„ Jogendra Nath Deb.

Confirmed in the first grade of Munsifs.

Babu Lal Singh.
„ Nilalohit Mookherjee.
„ Surendra Nath Mitra.
„ Asutosh Banerjee (No. I).
„ Pares Nath Chatterjee.
„ Ram Charan Mallik.
„ Hem Chundra Mukerjee.
„ Kisori Lal Sen.

Promoted to the first grade of Munsifs.

Babu Atul Chandra Batavyal.
„ Ambica Charan Mukerji.
„ Advaita Prasad De.
„ Dandadhari Biswas.
„ Nagendra Nath Dhar.
„ Syama Kanta Nag.
„ Mohini Mohun Dutt.
„ Kisori Mohan Sikdar.
„ Jagan Mohan Sarkar.
„ Jogendro Nath Mookerjee (No. III).
„ Lal Bihari Bhaduri.
„ Narendra Krishna Dutt.
„ Upendra Nath Datta.

Promoted substantively pro tempore *to the first grade of Munsifs.*

Babu Krishna Dhan Mookerjee.
„ Sarada Prosad Sen.
„ Tarak Nath Datta.
„ Asutosh Sarkar.

Confirmed in the second grade of Munsifs.

Babu Ramapati Dey.
„ Asutosh Ghose.
„ Shama Churn Chuckerbutty.
„ Romesh Chunder Sen.
„ Purna Chunder Sircar.
„ Mohendra Nath Dutt.
„ Harendra Narayan Guha.
„ Chunder Kumar Chatterjee.

Promoted to the second grade of Munsifs.

Babu Probha Chandra Singha.
„ Poresh Chunder Banerjee.
„ Annada Kumar Sen.
„ Chunder Bhoosan Banerjee.
„ Devendro Nath Pal.
„ Hridoy Nath Mazumdar.
„ Ganendra Nath Mukherjee.
„ Shyama Charan Banerjee.
„ Kunja Behary Gupta.
Maulvi Syed Mohamed Yusoof Ali.
Babu Gobind Gopal Gupta.
„ Surendra Nath Ghose.
„ Umesh Chunder Chuckerbutty.
„ Lolit Mohan Das.
„ Rajendra Lall Lahiry.
„ Dino Nath De.
„ Achinta Nath Mitter.
„ Bhagobutty Charan Kundu.
„ Hari Das Bose.
Maulvi Abdul Jubbar.
Babu Ananda Kisor Dutta Ray.
„ Amrita Lal Palit.
„ Mohim Chunder Chuckerbutty.
„ Nagendra Nath Chatterjee (No. I).
„ Jaya Prosad Pande.
„ Barada Prosad Rai.
„ Benode Behari Mitter.

Promoted substantively pro tempore *to the second grade of Munsifs.*

Babu Apurva Chandra Ghose.
„ Sukumar Bhattacharji.
„ Khagendra Nath Bose.
„ Kali Kumar Sirkar.

Confirmed in the third grade of Munsifs.

Babu Thakur Dayal.
„ Behari Lal Chatterjee (No. II).
Maulvi Mirza Bedar Bakht.

Babu Girindra Nath Mukerji.
„ Rama Prosad Moitra.
„ Ashutosh Gupta.
„ Norendra Nath Ghose.
„ Rajendra Nath Roy.
„ Bunwari Lal Banerjee.

Promoted to the third grade of Munsifs.

Babu Hem Chandra Mitter.
„ Nagendra Nath Mitra.
„ Nagendra Nath Chatterji (No. II).
„ Mohor Lal De.
„ Bejoy Kesub Mitter.
„ Jotindra Chandra Sen.
„ Sarat Chandra Ghose.
Mr. Mahomed Zahoor.
Babu Durga Das Chuckerbutty.
Maulvi Amir Ali.
Babu Kumudini Kant Roy.
„ Onil Chandra Dutt.
„ Kali Prosonno Sen.
„ Kedar Nath Chaudhuri.
„ Sarat Chandra Rai.
„ Durga Kant Roy.
Mr. A. S. M. Ziaur Rahman.
Babu Bhupal Chandra Sen.
„ Giris Chandra Sen.
„ Nogendra Nath Ghosh.
„ Satis Chandra Mitra.
„ Jagadish Chandra Goswamy.
„ Jadu Nandan Prosad.
„ Sasi Bhusan Banerji.
„ Mohini Mohan Ghose.
„ Kunja Behari Biswas.
„ Poresh Nath Roy Chowdhury.
„ Mohendra Nath Mukerjee.
„ Girindra Lal Roy.
„ Manmatha Nath Bose.
„ Charu Chandra Mitter.
„ Anukul Chandra Banerjee.
„ Ashutosh Chatterjee.
„ Parada Kinkur Mukerjee.
„ Hem Kumar Neogy.

Promoted substantively pro tempore *to the third grade of Munsifs.*

Mr. Mohamed Wahiduddin Ahmad.
Babu Jitendra Prosad Chatterjee.
„ Sris Chandra Chowdhury.
„ Ram Chandra Banerjee.

Confirmed in the fourth grade of Munsifs.

Babu Baman Das Mukerjee.
„ Kumud Kanta Bose.
„ Raj Kishore.
„ Satindra Nath Guha.

No. 3681A.—The 12th August 1902.—Babu Sidheswar Mukerjee, substantive *pro tempore* Munsif of the fourth grade, is confirmed in that grade, with effect from the 5th May 1902.

LEAVE.

No. 3554A.—The 6th August 1902.—Babu Umesh Chandra Sen (No. II), Munsif of Bagerhat, in the district of Jessore, is allowed leave for fifteen days, under article 306 (*b*) of the Civil Service Regulations, in extension of that granted to him under the order of the 25th June 1902.

Jessore.

The 6th August 1902.—Babu Harendra Narayan Guha, Munsif of Raghunathpur, in Chota Nagpur, is allowed leave for six days, under article 306 (*l*) of the Civil Service Regulations, in extension of that granted to him under the order of the 17th June 1902.

Chota Nagpur.

No. 3555A.—The 7th August 1902.—Babu Ramlal Dutt, Munsif of Kotalpur, in the district of Bankura, is allowed leave for ten days, under article 306 (*b*) of the Civil Service Regulations, in extension of that granted to him under the order of the 15th July 1902.

Bankura.

No. 3556A.—The 8th August 1902.—Babu Banwari Lal Banerjee (No. II), Munsif of Munshiganj in Dacca, under orders of transfer to Habiganj, in the district of Sylhet, is allowed leave for three weeks, viz., one day under article 309 of the Civil Service Regulations, and the remaining period under article 306 (*b*) of the same Regulations, with effect from the date on which he availed himself of it.

Sylhet.

The 8th August 1902.—Babu Satis Chandra Mitra, Munsif of Vishnupur, in the district of Bankura, is allowed leave for fifteen days, under article 306 (*b*) of the Civil Service Regulations, with effect from the date on which he availed himself of it.

Bankura.

The 8th August 1902.—Babu Shyama Churn Ukil, Munsif of Bogra, in the district of Pabna and Bogra, is allowed leave for twenty-one days, under article 306 (*b*) of the Civil Service Regulations, with effect from the 17th August 1902, or from the date on which he may be relieved.

Pabna and Bogra.

RESIGNATIONS.

No. 3500J.—The 11th August 1902.—The Lieutenant-Governor accepts the resignations tendered by the undermentioned gentlemen of their appointments as Honorary Magistrates of the Nadia or Nobodeep Municipal Bench, in the district of Nadia:—

Nadia.

Babu Jagavandhu Banerji. | Babu Panchanan Mukherji.

No. 3570J.—The 11th August 1902.—The Lieutenant-Governor accepts the resignation tendered by Kumar Dakhineswar Malia of his appointment as an Honorary Magistrate of the Raniganj Independent Bench, in the district of Burdwan.

Burdwan.

No. 3427J.—The 7th August 1902.—The Lieutenant-Governor accepts the resignation tendered by Babu Nath Prasad of his appointment as an Honorary Magistrate of the Lakhisarai Independent Bench, in the district of Monghyr.

Monghyr.

No. 3435J.—The 7th August 1902.—The Lieutenant-Governor accepts the resignation tendered by Babu Romes Chandra Sinha of his appointment as an Honorary Magistrate of the Jamui Independent Bench, in the district of Monghyr.

Monghyr.

POWERS.

No. 3444A.—The 7th August 1902.—Babu Aukshay Kumar Sur, substantive *pro tempore* Deputy Magistrate, Jamalpur, Mymensingh, is vested with the powers of a Magistrate of the second class.

Mymensingh.

No. 3462A.—The 8th August 1902.—Babu Purna Chandra Bose, Munsif of Goalundo, in the district of Faridpur, is vested with the powers of a Judge of a Court of Small Causes for the trial of suits cognizable by such a Court up to the value of Rs. 100, and with the functions of a District Court under section 26 (1) of Act VII of 1889, within the local limits of the Goalundo Munsifi.

Faridpur.

No. 3475A.—The 8th August 1902.—Babu Rai Krishna Bahadur, Deputy Magistrate, who has, under the order of this date, been posted to the head-quarters station of the Monghyr district, is vested with the powers of a Magistrate of the second class.

Monghyr.

No. 3478A.—The 8th August 1902.—Mr. Atul Krishna Ray, Deputy Magistrate, who has, under the order of this date, been posted to the head-quarters station of the district of Burdwan, is vested with the powers of a Magistrate of the first class, and with powers under sections 110 and 138 of the Code of Criminal Procedure.

Burdwan.

No. 3495A.—The 11th August 1902.—Babu Praphulla Sankar Sen, Deputy Magistrate, Backergunge, is vested with the powers of a Magistrate of the second class.

Backergunge.

No. 3497J.—The 11th August 1902.—Mr. Arthur Stowey Bailey, who has been re-appointed to be an Honorary Magistrate of the Independent Bench at Jamalpur, in the district of Monghyr, is vested with the powers of a Magistrate of the third class.

Monghyr.

No. 3568J.—The 11th August 1902.—Babu Ashu Tosh Chakerbarty, an Honorary Magistrate of the Raniganj Independent Bench, in the district of Burdwan, is vested with the powers of a Magistrate of the second class. He is also authorised to sit singly for the trial of such cases as may be made over to him by the Subdivisional Officer of Raniganj.

Burdwan.

No. 3573J.—The 11th August 1902.—Babu Kali Kumar Misra, who has been appointed to be an Honorary Magistrate of the Independent Bench at Raniganj, in the district of Burdwan, is vested with the powers of a Magistrate of the third class.

Burdwan.

No. 3580J.—The 11th August 1902.—Babu Harihar Prasad Singh, who has been appointed to be an Honorary Magistrate of the Independent Bench at Dumraon, in the district of Shahabad, is vested with the powers of a Magistrate of the third class.

Shahabad.

No. 3583J.—The 11th August 1902.—Babu Satkouri Chandra Ghosh, who has been appointed to be an Honorary Magistrate of the Suri Independent Bench, in the district of Birbhum, is vested with the powers of a Magistrate of the third class.

Birbhum.

No. 3596J.—The 12th August 1902.—Babu Kedar Nath Mukerjee, an Honorary Magistrate of the Independent Bench at Sealdah, in the district of the 24-Parganas, is vested with the powers of a Magistrate of the second class, and is also authorised to sit singly for the trial of such cases as may be made over to him by the District Magistrate.

24-Parganas.

No. 3600J.—The 12th August 1902.—Mr. Graham Peddie, who has been re-appointed to be an Honorary Magistrate of the Independent Bench at Sahibganj, in the district of the Sonthal Parganas, is vested with the powers of a Magistrate of the third class. He is also authorised to sit singly for the trial of cases which the Bench is empowered to take up and also cases that may be made over to him by the Subdivisional Officer of Rajmahal.

Sonthal Parganas.

C. E. BUCKLAND,
Chief Secy. to the Govt. of Bengal.

NOTIFICATION—No. 3575J.

The 12th August 1902.—It is hereby notified for general information that, under the powers vested in him by section 12 of the Code of Criminal Procedure (Act V of 1898), the Lieutenant-Governor appoints the Station Staff Officer, Lebong, for the time being to be *ex-officio* Cantonment Magistrate in the Cantonment at Lebong. His Honour also vests him, under section 39 of the Code, with the powers of a Magistrate of the third class. This supersedes Notification No. 5966J., dated the 23rd December 1895, issued by this Government, appointing the Officer Commanding the Lebong station to be *ex-officio* Cantonment Magistrate in the Lebong Cantonment.

Darjeeling.

C. E. BUCKLAND,
Chief Secy. to the Govt. of Bengal.

[Second Publication.]
NOTIFICATION—No. 3315J.

The 2nd August 1902.—In exercise of the power conferred by section 2 of Bengal Act II of 1867 (*an Act to provide for the punishment of public gambling and the keeping of common gaming-houses*), the Lieutenant-Governor is pleased to extend the said Act, with effect from the 1st September 1902, to the Chandpur Municipality, in the district of Tippera.

Tippera.

C. E. BUCKLAND,
Chief Secy. to the Govt. of Bengal.

[Third Publication.]
NOTIFICATION—No. 3251J.

The 29th July 1902.—In exercise of the powers conferred by section 2 of Bengal Act II of 1867 (*an Act to provide for the punishment of public gambling and the keeping of common gaming-houses in the territories subject to the Lieutenant-Governor of Bengal*), the Lieutenant-Governor is pleased—

Dinajpur.

(*a*) to extend the said Act, with effect from the 15th August 1902, to the town of Raiganj, comprising villages Dowlatpur, Mohanbati and Raiganj, in thana Raiganj, in the district of Dinajpur, and

(*b*) to define the limits of the said town as follows:—
North—Nichibari.
West—The River Kulik.
South—Pirgachi.
East—Barapooker, Brown Shaheb's temple and Kujapara top.

C. E. BUCKLAND,
Chief Secy. to the Govt. of Bengal.

POLITICAL DEPARTMENT—(JAILS).

NOTIFICATION—No. 1663P.

The 11th August 1902.—The following gentlemen are appointed to be non-official visitors of the Hazaribagh Central Jail:—

Hazaribagh.

Mr. J. Bowman. | Mr. D. Latterie. | Babu Kali Pada Sirkar.

C. E. BUCKLAND,
Chief, Secy. to the Govt. of Bengal.

PUBLIC WORKS DEPARTMENT.

ESTABLISHMENT.

The 11th August 1902.

No. 170.—Mr. J. B. Ralph, Assistant Engineer, Upper Rajshahi Division, is transferred, in the interests of the public service, to the Darjeeling Division.

The 12th August 1902.

No. 171.—Mr. A. F. Higgins, Superintending Engineer, Northern Circle, is granted two months' privilege leave, under article 291 of the Civil Service Regulations, combined with one month's famine concessions leave under the terms of the Government of India, Finance and Commerce Department Resolution No. 5217P., dated the 16th October 1900.

W. A. INGLIS,
Offg. Secy. to the Govt. of Bengal.

COMMUNICATIONS.

The 12th August 1902.

No. 161C.—Declaration.—Whereas it appears to the Lieutenant-Governor of Bengal that land is required to be taken up by Government at the public expense for a public purpose, viz., to provide side lands for the due maintenance of the Ranchi-Purulia road by the Public Works Department along portions of the 38th and 39th miles, and situated in the village of Sili, pargana Sili, zilla Ranchi, it is hereby declared that for the above purpose two pieces of land (*a*) and (*b*) measuring more or less—

		B.	K.	CH.
(*a*)	... ...	0	17	10
(*b*)	... ...	0	17	13
	Total ...	1	15	7

of standard measurement, bounded as noted below, are required within the aforesaid village.

Boundary of—

(*a*) Piece of land on the northern side of the Ranchi-Purulia road—

North—1. Late Jadu Rai's house and bari.
2. Raja's waste land.
3. Public Works Department's rest-house, front compound.
4. Gopal Singh Babu's done land.
5. Village basti.

South—Public Works Department's Ranchi-Purulia road.

East— } Public Works Department's roadside land.
West— }

(*b*) Piece of land on the south of the Ranchi-Purulia road—

North—Public Works Department's Ranchi-Purulia road.
East—Public Works Department's roadside land.
South—1. Village basti.
2. Radha Tamolie's done land.
3. Outstill.
4. Gopal Singh Babu's done land.
5. Village basti.
West—Village road.

This declaration is made, under the provisions of section 6, Act I of 1894, to all whom it may concern.

A plan of the land may be inspected in the office of the Executive Engineer, Chota Nagpur Division, at Ranchi.

No. 164C.—Declaration.—Whereas it appears to the Lieutenant-Governor of Bengal that land is required to be taken by Government at the public expense for a public purpose, viz, for the due maintenance of Ranchi-Chaibasa Road by the Public Works Department in the village of Murhu, pargana Sonepur, zilla Ranchi, it is hereby declared that for the above purpose two pieces of land—one on each side of the road, measuring in all, more or less, 6

bighas 10 cottahs and 14 chitaks of standard measurement, bounded as noted below—are required within the aforesaid village of Murhu:—

Boundaries.

1. The piece of land on the east side of the road—

North—Waste land

East—West (*sic*) cultivation or don lands.
Taur land.
Lac Factory.
Mango tope.
Village Basti, Kolha Sahu's house, Chamru Sahu, and Ram Charan Halwan's and other houses.
Wet cultivation.
Waste land.

South—Nalla or dhorha, which passes through bridge No. 84.

West—Ranchi-Chaibasa Road.

2. The piece of land on the west side of the road—

North—Waste land.

East—Ranchi-Chaibasa Road.

South—Dhorha which passes through bridge No. 84.

West—Waste land and taur land.
Bazar sheds.
Village Basti Latu Halwai and others' houses.
Village footpath and waste land.
Daskan Mundari's bari.
Waste land.

This declaration is made, under the provisions of section 6 of Act I of 1894, to all whom it may concern.

A plan of the land may be seen in the office of the Executive Engineer, C. N. D., at Ranchi.

W. A. INGLIS,
Offg. Secy. to the Govt. of Bengal.

LOCAL COMMUNICATIONS.

The 12th August 1902.

No. 157 L.C.—Declaration.—Whereas it appears to the Lieutenant-Governor of Bengal that land is required to be taken by Government at the public expense for a public purpose, viz, for the construction of a feeder road from the Gangpur Railway station to the Grand Trunk Road, in the villages of Alia and Joteram, pargana Burdwan, zilla Burdwan, it is hereby declared that for the above purpose a piece of land, 2,245 feet in length and varying from 86 feet to 114 feet in breadth, from the Gangpur station southwards to the Grand Trunk Road, measuring, more or less, 15 bighas 11 cottahs 11 chitaks (or 5 acres 24 37 poles of standard measurement), bounded by nicks on the ground, is required within the aforesaid villages of Alia and Joteram.

This declaration is made, under the provisions of section 6 of Act I of 1894, to all whom it may concern.

A plan of the land may be inspected in the office of the District Engineer, Burdwan.

W. A. INGLIS,
Offg. Secy. to the Govt. of Bengal.

MIS. PUB. IMPTS.

The 12th August 1902.

No. 162 M.P.I.—Declaration.—Whereas it appears to the Lieutenant-Governor of Bengal that land is required to taken by Government at the public expense for a public purpose, viz., for the Hablauchha khal diversion, in the village of Hablauchha, pargana Sarail, zilla Tippera, it is hereby declared that for the above purpose a piece of land measuring, more or less, 5 cottahs and 1 chitak of standard measurement, bounded on the north by Kishore Kapali's land, on the south by Local Board's khal, on the east by Pandab Kapali's land, and on the west by Kishore Kapali's new tank, is required within the aforesaid village of Hablauchha.

This declaration is made, under the provisions of section 6 of Act I of 1894, to all whom it may concern.

A plan of the land may be inspected in the office of the Collector of Tippera.

W. A. INGLIS,
Offg. Secy. to the Govt. of Bengal.

RAILWAY DEPARTMENT.

The 12th August 1902.

No. 158R.—Declaration.—Whereas it appears to the Lieutenant-Governor of Bengal that land is required to be taken by Government at the public expense for a public purpose, viz., for alterations of yard at Dinapore Station, East Indian Railway, in the village of Salimpur Chatra (lakhiraj), pargana Phulwari, zilla Patna, it is hereby declared that for the above purpose two pieces of land measuring, more or less, 3 bighas 9 cottahs 6 chitaks of standard measurement (corresponding to 1·15 acres), bounded as follows:—

Plot No I.—On the north by the public road, on the east by East Indian Railway land, on the south by East Indian Railway land, and on the west by the land of Bhola Gwala,

Plot No. II.—On the north by East Indian Railway land, on the east by East Indian Railway land, on the south by the fields of Gokhul Mahto, Sambhu Mahto, Bhola Gwala, Gulzar Gwala and Thakur Mahto, and on the west by the land of Gokhul Mahto,

are required within the aforesaid village of Salimpur Chatra.

Mines of coal, iron-stone, slate or other minerals lying under the land, except only such parts of the mines and minerals as it may be necessary to dig or carry away or use in the construction of the work for the purpose of which the land is being acquired, are not needed.

This declaration is made, under the provisions of section 6 of Act I of 1894, and section 3, clause (1), Act XVIII of 1885, to all whom it may concern

A plan of the land may be inspected in the office of the Collector of Patna

No. 159R.—Declaration.—Whereas it appears to the Lieutenant-Governor of Bengal that land is required to be taken by Government at the public expense for a public purpose, viz., for the construction of Sankos Bridge and main line and protection bund, Eastern Bengal State Railway, in the village of Pakerchara, pargana Gaibari, zilla Rangpur, it is hereby declared that for the above purpose two pieces of land measuring, more or less, 99 acres and 6 poles of standard measurement, bounded as follows:—

A plot situated on the left bank of Sankos.—On the north by Pakerchara, on the south by Pakerchara, on the east by Bharater Chara village, and on the west by river Sankos,

A plot situated on the right bank.— On the north by Pakerchara, on the south by Pateswari ferry ghat, on the east by river Sankos, and on the west by Pakerchara village and Koshaldanga nala,

are required within the aforesaid village.

Mines of coal, iron-stone, slate or other mineral lying under the land, except only such parts of the mines and mineral as it may be necessary to dig or carry away or use in the construction of the work for the purpose of which the land is being acquired, are not needed.

This declaration is made, under the provisions of section 6, Act I of 1894, and section 3, clause (1), Act XVIII of 1885, to all whom it may concern.

A plan of the land is available for inspection in the office of the Executive Engineer, Sankos, Eastern Bengal State Railway.

No. 160R.—Declaration.—Whereas it appears to the Lieutenant-Governor of Bengal that land is required to be taken by Government at the public expense for a public purpose, viz., for station yard, Pateswari station, Eastern Bengal State Railway, in the village of Goshidanga, pargana Gaibari, zilla Rangpur, it is hereby declared that for the above purpose a piece of land measuring, more or less, 23 acres 2 roods 16 poles of standard measurement, bounded on the north by Pakerchara village, on the south by Goshidanga village, on the east by Koshaldanga nala, and on the west by Pakerchara, is required within the aforesaid village.

Mines of coal, iron-stone, slate or other mineral lying under the land, except only such parts of the mines and mineral as it may be necessary to dig or carry away or use in the construction of the work for the purpose of which the land is being acquired, are not needed.

This declaration is made, under the provisions of section 6, Act I of 1894, and section 3, clause (1), Act XVIII of 1885, to all whom it may concern.

A plan of the land is available for inspection in the office of the Executive Engineer, Sankos, Eastern Bengal State Railway.

No. 163R —Declaration.—Whereas it appears to the Lieutenant-Governor of Bengal that land is required to be taken by Government at the public expense for a public purpose, viz., for Katras-Khanoodih extension of Jheria Branch, East Indian Railway, in the villages of Chotabad, Kailudih, Chitodih, Taturiah, Gobindpur, Billarah, Toondoo, Moheshpur, Phuluatand, Mirza, Beneedih, Nudh Kharkee and Baghmara, parganas Katras and Nowagar, zilla Manbhum, it is hereby declared that for the above purpose a piece of land measuring, more or less, 597 bighas 15 cottahs 6·46 chitaks of standard measurement (corresponding to 197 acres 2 roods 17·62 poles), 8 miles in length, varying in width from 100 feet to 400 feet, running east to west from Katrasgurh station of the Jheria Branch, East Indian Railway, to village Baghmara, is required within the aforesaid villages.

Mines of coal, iron-stone, slate or other minerals lying under the land, except only such parts of the mines and minerals as it may be necessary to dig or carry away or use in the construction of the work for the purpose of which the land is being acquired, are not needed.

This declaration is made, under the provisions of section 6 of Act I of 1894, and section 3, clause (1), Act XVIII of 1885, to all whom it may concern.

A plan of the land may be inspected in the office of the District Engineer, East Indian Railway, Asansol.

No. 165R.—Declaration.—Whereas it appears to the Lieutenant-Governor of Bengal that land is required to be taken by Government at the public expense for a public purpose, viz., for staff quarters of East Indian Railway, Station Banahi, in the village of Bagahi, pargana Behea, zilla Shahabad, it is hereby declared that for the above purpose a piece of land measuring, more or less, 1 bigha 1 cottah and 11 chitaks of standard measurement, bounded on the—

North—By railway lands,
South—By parts of the fields of Hiatali Mohamed Raze, Mosamat Kadiran, Shaikh Dukhi and Makhola Singh,
East—By Makhola Singh's field,
West—By part of Hiatali's field,

is required within the aforesaid village of Bagahi.

Mines of coal, iron-stone, slate or other minerals lying under the land, except only such parts of the mines and minerals as it may be necessary to dig or carry away, or use in the construction of the work for the purpose of which the land is being acquired, are not needed.

This declaration is made, under the provisions of section 6, Act I of 1894, and section 3, clause (1), Act XVIII of 1885, to all whom it may concern.

A plan of the land may be inspected in the office of the Collector of Shahabad.

No. 166R.—Declaration.—Whereas it appears to the Lieutenant-Governor of Bengal that land is required to be taken by Government at the public expense for a public purpose, viz., for the construction of staff quarters at Baruna Block Hut of the East Indian Railway in the village of Baruna, pargana Bhojepur, zilla Shahabad, it is hereby declared that for the above purpose a piece of land measuring, more or less, 1 bigha 1 cottah and 11 chitaks of standard measurement, bounded on the—

North—By the railway land,
South—By the part of the fields of Musan Ahir and Jug Narain Chaubey,
East— } By the part of the fields of Jug Narain Chaubey,
West— }

is required within the aforesaid village of Baruna.

Mines of coal, iron-stone, slate or other minerals lying under the land, except only such parts of the mines and minerals as it may be necessary to dig or carry away, or use in the construction of the work for the purpose of which the land is being acquired, are not needed.

This declaration is made under the provisions of section 6, Act I of 1894, and section 3, clause (1), Act XVIII of 1885, to all whom it may concern.

A plan of the land may be inspected in the office of the Collector of Shahabad.

W. A. INGLIS,
Offg. Secy. to the Govt. of Bengal.

MARINE DEPARTMENT.

The 8th August 1902.

No. 106Marine.—The following Resolution of the Government of India, sanctioning certain alterations in the first clause of the existing Form of Agreement with Indian seamen employed in foreign-trade ships, is published for general information.

D. B. HORN,
Offg. Secy. to the Govt. of Bengal.

No. 4187S.R., dated Simla, the 1st August 1902.

RESOLUTION—By the Government of India, Finance and Commerce Dept.

READ AGAIN—

Resolution No. 983S.R., dated 28th February 1896, making certain alterations in the first clause of the form of lascar agreement.

Read also—

Despatch from His Majesty's Secretary of State for India, No. 102Revenue, dated the 13th June 1902, and enclosures.

In paragraph 2 of the observations recorded in the Resolution read in the preamble, it was observed that the majority of the authorities who were consulted on certain proposals to

alter the first clause of the form of lascar agreement were opposed to any alteration which would permit of lascars being sent to ports on the east coast of America north of 38 degrees north latitude during the winter months. With the despatch of the 13th June last, the Secretary of State has forwarded a petition from a number of ship-owning firms, together with representations made by the German and American Ambassadors in London, urging the abolition or modification of the clause in the agreement which thus restricts the limit of employment of lascars; and the Government of India have been asked to consider whether, as an experimental measure, the limit might not be raised from 38 to 43 degrees north latitude in the case of lascars who volunteer for employment, and who are employed solely between decks in the Engine and Stewards' Departments.

2. In the petition of the ship-owning firms, it is said that stringent regulations, which might have been necessary when the form of agreement was originally drawn up, are no longer required, as in the modern steamers which ply in the trades between the United States and the East, native seamen are accommodated in comfortable quarters with proper heating fixtures, etc. The Board of Trade is prepared to accept the proposed modification as an experiment, provided that regulations are made and strictly enforced to secure the proper heating of the lascars' forecastles, and the provision of warm clothing throughout the winter months.

3. In these circumstances the Government of India have decided to sanction the proposed change. The Governor-General in Council is accordingly pleased to direct, under section 27 (1) (*a*) of the Indian Merchant Shipping Act, 1883 (V of 1883), that the proviso to the first clause of the Form of Agreement signed by Indian seamen engaging for voyages to foreign countries shall be modified as shown below:—

Present proviso.	*New proviso.*
Provided always that during the said period of months between the 1st day of October in one year and the 31st day of March in the succeeding year, the said crew shall not be bound to serve on voyages to any port in the Baltic or any port on the east coast of America north of 38 degrees north latitude; and provided also that, save under special agreements voluntarily undertaken, the said crew shall not be bound to serve on a voyage round Cape Horn.	Provided always that, (*a*) save under special agreements voluntarily undertaken, the said crew shall not be bound to serve on a voyage round Cape Horn; and (*b*) during the said period, the said crew shall not be bound to serve between the 1st day of October in one year and the 31st day of March in the succeeding year— (1) on voyages to any port in the Baltic: (2) on voyages to any port on the east coast of America north of 38 degrees north latitude, except under special agreements voluntarily undertaken by members of the said crew employed solely between decks in the Engine and Stewards' Departments to serve on voyages to ports on that coast between 38 degrees and 43 degrees north latitude.

Ordered that a copy of this Resolution be forwarded to the Governments of Madras, Bombay, Bengal and Burma and to the Director-General of Statistics for information.

Ordered also that a copy of the Resolution be published in the *Gazette of India*.

The 8th August 1902.

No. 107 Marine.—The following notification No. 1840, dated the 31st July 1902, issued by the Government of India, Home Department, relative to the imposition of quarantine on passengers from Egypt, is republished for general information.

D. B. HORN,
Offg. Secy. to the Govt. of Bengal.

No. 1840, dated Simla, the 31st July 1902.

NOTIFICATION—By the Government of India, Home Department.

THE following telegram is published for general information:—

Telegram dated Therapia, the 28th July 1902.

From—His Britannic Majesty's Ambassador Extraordinary and Plenipotentiary at Constantinople,

To—His Excellency the Viceroy.

Twelve days' quarantine against Egypt.

The 11th August 1902.

No. 108Marine.—The Government of India in the Home Department having in their letter No. 1799, dated the 12th June 1902, ruled that no holiday shall in future be declared on the 24th May, the birthday of Her late Majesty, the date "24th May," mentioned in the notifications of this Department Nos. 32 and 33Marine, dated the 25th February 1902, fixing the additional fee to be charged for surveys made on certain specified holidays, is hereby cancelled.

D. B. HORN,
Offg. Secy. to the Govt. of Bengal.

The 11th August 1902.

No. 109Marine.—It is hereby notified that Mr. P. E. Cammiade, Officiating Magistrate and Collector of Chittagong, is appointed, under section 9 of the "Chittagong Port Commissioners' Act, 1887," to be a Commissioner of the Port of Chittagong, *vice* Mr. E. Geake, resigned.

Mr. Cammiade is also appointed, under section 10 of the Act, to be the Vice-Chairman of the Commissioners.

D. B. HORN,
Offg. Secy. to the Govt. of Bengal.

SUBORDINATE CIVIL SERVICE.

No. 3685A.

No. 3446A.—The 12th August 1902.—Maulvi Syed Khalil Ahmad, substantive *pro tempore* Sub-Deputy Collector, Patna, is transferred to the Jahanabad subdivision of the district of Gaya.

Patna.
Gaya.

C. E. BUCKLAND,
Chief Secy. to the Govt. of Bengal

CIVIL MEDICAL DEPARTMENT, BENGAL.

No. 7995, dated the 6th August 1902.—Assistant Surgeon Ras Behari Baksi hold charge of the Baraset Subdivision and Dispensary, in the 24-Parganas district, from the afternoon of the 4th to the afternoon of the 21st July 1902.

No. 7999, dated the 6th August 1902.—In continuation of Civil Medical Department Notification No. 371D., dated the 29th April 1902, the name of the undermentioned student who passed the final examination for Civil Hospital Assistants, and who is qualified for medico-legal work, is published for general information:—

Cuttack Medical School.

1. Madan Das.

No. 8134, dated the 8th August 1902.—Assistant Surgeon Upendra Nath Baksi is appointed to do supernumerary duty at the Medical College Hospital, Calcutta, until further orders, with effect from the forenoon of the 22nd July 1902.

No. 8137, dated the 8th August 1902.—Assistant Surgeon Kherode Chandra Ghosh is appointed to do supernumerary duty at the Medical College Hospital, Calcutta, until further orders, with effect from the forenoon of the 27th July 1902.

R. D. MURRAY, M.D., LIEUT.-COL., I.M.S.,
for *Inspector-General of Civil Hospitals, Bengal.*

TREASURY NOTICES.

UNCOVENANTED DEPUTY COLLECTOR BABU HARA CHANDRA GHOSH has been placed in charge of the Rajshahi Treasury from the 17th July 1902 and authorised to draw bills on other Treasuries.

C. R. MARINDIN, *Commissioner.*

COMMR.'S OFFICE, RAJSHAHI DIVN., JALPAIGURI, *the 5th August 1902.*

DEPUTY COLLECTOR BABU KUNJA BEHARI CHATTERJI has been placed in charge of the Mymensingh Treasury, with effect from the forenoon of the 1st August 1902, and is authorised to draw bills on other Treasuries.

GUNGA N. ROY, *Persl. Asst.*, for *Commr.*

DACCA COMMR.'S OFFICE, *the 6th August 1902.*

UNCOVENANTED DEPUTY COLLECTOR BABU RAM NARAIN BANERJEE is hereby placed in charge of the Birbhum Treasury, *vice* Babu Kumad Bandhu Das Gupta, and is authorised to draw bills on other Treasuries.

RAJ MOHAN CHUCKERBUTTY, *Pers. Asst.*, for *Commr. on tour.*

COMMR.'S OFFICE, BURDWAN DIVN., CHINSURA, *the 8th August 1902.*

BABU SASI BHUSHN SEN, Deputy Collector, has been placed in charge of the Noakhali Treasury and is authorised to draw bills on other Treasuries.

R. S. GREENSHIELDS, *Offg. Commr.*

COMMR.'S OFFICE, CHITTAGONG, *the 8th August 1902.*

Sheriff's Office, the 23rd July 1902.

NOTICE is hereby given that the Fourth Criminal Sessions of the year 1902 of the High Court of Judicature at Fort William in Bengal, for the Town of Calcutta and Factory of Fort William, and the places subordinate thereto, will be held at the Court-house, in the Town of Calcutta, on Monday, the eighteenth day of August next, at 11 o'clock in the forenoon, and thence forward from day to day until the said Sessions be over. And it is hereby proclaimed that all persons who are to prosecute any of the prisoners to be brought up for trial at the said Sessions be present then and there to prosecute.

H. M. RUSTUMJEE, *Sheriff.*

সরিফ আফিস, সন ১৯০২ সাল তারিখ ২৩শে জুলাই।

সকলকে সমাচার দেওয়া যাইতেছে যে সুবা বাঙ্গালার কোর্ট উইলিয়ম দুর্গের অধীন শহর কলিকাতায় ও অন্যান্য স্থানের ফৌজদারী বিচার নিষ্পত্তি জন্য আগামী সন ১৯০২ সালের ১৮ই আগষ্ট সোমবার বেলা ১১ ঘটিকার সময় এবং যে পর্য্যন্ত সেশিয়ানের কার্য্য শেষ না হয় প্রতিদিন উক্ত সময়ে কলিকাতার হাইকোর্টের আপন আদালত ঘরে সন ১৯০২ সালের চতুর্থ ক্রিমিনেল সেশিয়ান বসিবেক এবং এতদ্দ্বারা প্রচার করা যাইতেছে যে, যে সকল ব্যক্তি কোন কয়েদির বিরুদ্ধে ফৌজদারী মিছিল করিবেক তাহারা উক্ত স্থানে উক্ত সময়ে হাজির থাকিয়া মোকদ্দমা করে ইতি।

এইচ্, এম্, রস্তমজী, সরিফ।

SMALL CAUSE COURT NOTICE.

NOTICE is hereby given, under section 7 of Act IX of 1887, that the Judge of the Small Cause Courts of Dacca and Munshigunge will, in the month of September 1902, sit in those Courts on the undermentioned dates, Sundays and holidays excepted :—

Dacca Small Cause Court ...	... 2nd, 3rd, 9th, 10th, 16th and 26th of September 1902.
Munshigunge Small Cause Court	... From the 18th to the 24th of September 1902.

SRINATH PAL, *Judge, Small Cause Court.*

DACCA SMALL CAUSE COURT, *the 2nd August 1902.*

EDUCATION DEPARTMENT, BENGAL.

Subordinate Educational Service.

The 9th August 1902.—Babu Kali Prasanna Das, a Sub-Inspector of Schools under the District Board of Faridpur, has been granted by the Board privilege leave for two months, with effect from the 16th June 1902.

A. PEDLER,
Director of Public Instruction, Bengal.

OFFICE MEMORANDUM OF THE INSPECTOR OF SCHOOLS, PATNA DIVISION.

THE Middle Vernacular Scholarship of Rs. 4 a month, tenable at the Motihari Zilla School, and awarded, under orders of this office of the 24th January 1902, published in the *Calcutta Gazette* of the 5th February 1902 at pages 259-260, to Sukhi Dube, who passed the last Middle Scholarship Examination from the Burharwa Middle English School, in the district of Champaran, is hereby withdrawn, as it subsequently transpired from the records of the school as well as from an examination of the boy by the Civil Surgeon of Champaran that the age of the boy was more than 15 years, which makes him ineligible for scholarship under the rules. The boy will have to pay admission fee and monthly tution fees in the Motihari Zilla School from the date of admission.

The said scholarship of Rs. 4 a month is hereby re-awarded to Gullar Sahni, who passed the last Middle Vernacular Scholarship Examination from the Rohika Board Aided Middle English School, in the district of Darbhanga. The scholarship is to commence from 1st January 1902, and will run up to 31st December 1904, and is made tenable at the Northbrook School at Darbhanga.

BANKIPUR,
The 1st August 1902.

HARI DAS BANERJEA,
Asst. Inspr. of Schools, Patna Divn, in charge

NOTIFICATION.

IT is hereby notified for general information that upon the result of the next Entrance Examination to be held in the year 1903 being known, the three second grade junior scholarships allotted to the Bhagalpur Division will be awarded to the three boys who stand first in order of merit in the divisional list without reference to districts, and the nine third grade junior scholarships will be distributed as follows:—

Monghyr	...	...	...	2
Bhagalpur	...	...	...	2
Purnea	...	...	...	2
Malda	...	...	...	1
Sonthal Parganas		...	...	2
			Total ...	9

H. C. WILLIAMS, *Commissioner.*

COMMR.'S OFFICE, BHAGALPUR, *the 2nd August 1902.*

NOTIFICATIONS OF THE BOARD OF REVENUE.

NOTIFICATION—No. 2047B.

Dated Calcutta, the 2nd August 1902.

CUSTOMS.

THE HON'BLE MR. BOURDILLON, C.S.I.

Grant of rewards to Customs and other officers.

IN supersession of rules 10 and 11 issued under the provisions of the Sea Customs Act, VIII of 1878, and published at pages 31-32, Part I of the *Calcutta Gazette* of the 14th January 1885, the following revised rules which have been approved by the Government of India are published for general information.

By order of the Board of Revenue, L. P.,

H. WHEELER,

Secretary.

10. To officers of Customs or other persons, who are instrumental in detecting and bringing to notice infringements and evasions of the provisions of the Sea Customs Act, or of the Indian Merchandise Marks Act, rewards may, when it is considered that they are merited, be given in the following cases in which goods may be confiscated, or a penalty or fine imposed:—

(*a*) Smuggling or attempted importations of articles contrary to the provisions of section 18 or 19 of the Sea Customs Act.

(*b*) Breaches or attempted breaches of the provisions of the Sea Customs Act or of rules made thereunder when such breaches were probably intended to facilitate the importation or exportation of dutiable goods, or the removal of goods from bond without payment of full duty thereon.

(*c*) Breaches of the provisions of the Indian Merchandise Marks Act.

(*d*) False declaration of the contents of packages in regard to sort, quality, quantity, value, or other conditions.

(*e*) Undervaluation in a bill-of-entry or understatement of quantity in a shipping bill, affecting the amount of duty chargeable where such undervaluation or understatement is solely the result of accident or error.

11. (*a*) In each case the reward shall not exceed one-half of the realised value of the confiscated goods (if any), and of the penalty or fine imposed, and shall be so restricted that the balance shall suffice to cover all outstanding Government dues (if any), and any incidental charges incurred in consequence of the seizure of the goods.

(*b*) If, however, in any case the value of the confiscated goods, or the penalty or fine imposed, is not realised, or is only realised in part, and if the aggregate sum realised appears to be insufficient for the purpose of rewarding the officer of Customs and other person or persons who have been instrumental in detecting and bringing to light the case, the Chief Customs Authority, on the recommendation of the Customs Collector, may grant such reward or rewards not exceeding in the aggregate one-half of the estimated value of the confiscated goods (if any) and of the penalty or fine as he may think reasonable.

11A. The adjudication of rewards shall, in all cases, be made by the Chief Customs Officer. No reward shall be paid until three months have elapsed from the date of the confiscation of the goods or infliction of the penalty with reference to which it is to be paid. The payment to any person or persons in any case of a reward or rewards under these rules exceeding in the aggregate Rs. 500 shall require the previous sanction of the Local Government.

NOTICE.

No. 1963B.

THE HON'BLE MR. BOURDILLON, C.S.I., *Member in charge.*

IT is hereby notified for general information that rowanas for salt consigned to districts in the Orissa Division by the route of the Bengal-Nagpur Railway *viâ* the Shalimar salt pass-station should henceforth be surrendered to the officer in charge of that station, who should make them over to the Covenanted Deputy Collector of Howrah, through the proper channel, for return to the Board's office.

2. The practice of returning such rowanas to the consignors of salt after endorsement at Shalimar, in order that they may be sent by post to the Customs officers of the importing districts in the Orissa Division, will henceforth be discontinued.

By order of the Board of Revenue, L. P.,

MISC. REVENUE DEPT.,
SALT ROWANA BRANCH, CALCUTTA,
The 28th July 1902.

H. WHEELER,
Secretary.

No. 1994B.

NOTICE is hereby given that the Ninth Sale of Opium, the Provision of 1900-1901, will be held at the Government Opium Sale-room, No. 2 Bankshall Street, on Monday, the 1st September 1902, at 11 A.M., and will comprise 4,000 chests, viz.—

		Chests.
Opium manufactured at the Patna Factory, consisting of	...	2,000
Opium manufactured at the Ghazipur Factory, consisting of	...	2,000
Total	...	4,000

2nd.—The general conditions of the sale now advertised will be the same as usual. They may be ascertained by reference to the Notification issued on the 19th November 1901, and published in the *Government* and *Exchange Gazettes*, or on personal application at the office of the Board of Revenue.

3rd.—The latest dates for deposit and clearance will be the 6th and 16th September 1902, respectively, that is to say, no Bank of Bengal Receipts, Government Promissory Notes or other Public Securities that may be tendered for deposit in redemption of Promissory Notes given by purchasers in the sale-room will be received after 1-30 P.M. of Saturday, the 6th September 1902, and no Bank of Bengal Receipts in full payment of lots will be accepted after 3-30 P.M. of Tuesday, the 16th September 1902.

4th.—In addition to the quantity above advertised for sale, the following quantities, more or less, of the Opium manufactured at the Patna and Ghazipur Factories will be brought to sale down to December next on or about the dates specified below. The Board of Revenue, however, reserve to themselves the right of altering these dates, should circumstances render it expedient to do so :—

DATES.	Manufactured at the Patna Factory ; about chests.	Manufactured at the Ghazipur Factory ; about chests.	Total ; about chests..
On or about Monday, 29th September 1902 ...	2,000	2,000	4,000
On or about Monday, 3rd November „ ...	2,000	2,000	4,000
On or about Monday, 1st December „ ...	2,000	2,000	4,000
Total ...	6,000	6,000	12,000

By order of the Board of Revenue, L. P.,

H. WHEELER, *Secretary.*

BOARD OF REVENUE, L. P., CALCUTTA, *the 29th July 1902.*

Statement showing the Quantity of Salt (Private Property) in Bonded Warehouses and Afloat on the River Hooghly on the 31st day of July 1902, and Transactions during the half-month from the 16th to the 31st July 1902.

DESCRIPTION OF SALT.	IN BONDED WAREHOUSES IN CALCUTTA.				Quantity afloat.	Grand Total.	TRANSACTIONS DURING HALF-MONTH FROM THE 16TH TO THE 31ST JULY 1902, INCLUSIVE.			
	In private golas.	In Sulkea Government golas.	In Kidderpore Dock Government golas.	Total.			Quantity on which duty has been paid.	Manifested quantity arrived in the Port of Calcutta.	Deliveries from shipboard for consumption and for inland bonded warehouses.	Deliveries from bonded warehouses for consumption and for inland bonded warehouses.
1	2	3	4	5	6	7	8	9	10	11
		Mds.	Mds.	Mds.	Mds.	Mds.	Mds.	Mds.	Mds.	Mds.
United Kingdom—										
Liverpool and other Panga salt.	.....	6,83,549	8,13,017	14,96,566	97,382	15,93,948	1,67,003	2,46,281	75,815	1,11,125
Other European countries—										
Hamburg salt	.....	1,12,637	5,851	1,18,488	.....	1,18,488	36,690	794	19,400	30,720
Aden and Red Sea—										
Aden salt	.....	2,78,506	21,936	3,00,442	.....	3,00,442	38,276	.....	... ..	33,863
Salif salt	.....	2,26,783	.....	2,26,783	.....	2,26,783	40,215	.....	.....	62,435
Salif rock salt	.....	10,615	.....	10,615	.....	10,615	500	.....	.....	.....
Rawayah salt	.....	53,732	37,300	91,032	.....	91,032	28,021	.....	.....	26,961
Muscat and Persian Gulf—										
Muscat, Lingah and Hanjam salt.	.....	1,35,051	.....	1,35,051	.....	1,35,051	3,600	.....	.....	3,600
Ditto ditto Rock salt.	.....	6,917	.....	6,917	.....	6,917	.....	.....	.....	.....
British India—										
Bombay salt	.....	2,05,222	.....	2,05,222	.....	2,05,222	31,741*	.....	3,900	24,591
Madras salt	.....	.....	.....	.....	.....	.....	.....	.....	.....	.....
Cocanada salt	.....	.....	.....	.....	.....	.....	.....	.....	.....	.....
Vizagapatam salt	.....	.....	.....	.....	.....	.....	.....	.....	.....	.....
Other places—										
Madagascar salt	.....	.....	.....	.....	.....	.....	.....	.....	.....	.....
Port Said salt	.....	1,06,480	.....	1,06,480	.....	1,06,480	2,975	.....	.....	4,695
Total ...	.....	18,19,492	8,78,104	26,97,596	97,382	27,94,978	3,53,921	2,47,075	99,115	2,98,190

* This quantity includes 30,850 maunds Bombay Karkach salt on which duty was paid at Bombay.

By order of the Board of Revenue, L. P.,

L. F. MORSHEAD, *Offg. Collector of Customs.*

CALCUTTA CUSTOM HOUSE, *the 8th August 1902.*

ELECTION OF MUNICIPAL COMMISSIONERS.

NOTIFICATION.

IT is hereby notified for general information, under Rule 21 (*b*) of the Rules for Hospitals and Dispensaries, that the District Board of Faridpur, at its meeting held on the 28th June 1902, has appointed the following gentlemen to form a Committee for the management of the Talma Charitable Dispensary, in the district of Faridpur:—

1. Babu Syama Charan Chakravorti, of Ajia.
2. Abdul Karim Mia, of Atail.
3. Syed Hatem Ali, of Gorail.
4. Babu Prio Nath Chakrovorti, of Sakrail.
5. Babu Jogendra Chandra Rai, of Majhikanda.
6. The Naib of Nator Zamindari Cutchery at Talma.
7. Masoomuddin Noor Ahmed Choudhury, of Talma.
8. Babu Dawraka Nath Ghose, of Rahutpara.
9. The Peshkar of the Cutchery of Maharaja at Talma.
10. The Naib of Babu Nirod Krishna Roy's Cutchery.
11. The Naib of the Cutchery of Maharaja Sir Jatindra Mohun Tagore Bahadur, K.C.S.I. (President).
12. The Postmaster of Talma (*ex-officio* Secretary).

GUNGA N. ROY, *Persl. Asst*, for *Commr.*

DACCA COMMR.'S OFFICE, *the 5th August 1902.*

NOTIFICATION.

IT is hereby notified for general information that Maulvi Syed Mahamad Yakub, B.A., has been appointed, under Rule 21 (*b*) of the Rules for the management of the Charitable Hospitals and Dispensaries in Bengal, to be a member of the Committee for the management of the Chatra Dispensary, in the district of Hazaribagh, in place of Babu Bhuboneshwar Sanyal, transferred to Giridih.

KRISHNAKALI MUKHARJI, *Persl. Asst. to Commr.*, for *Offg. Commr.*

COMMR.'S OFFICE, RANCHI, *the 7th August 1902.*

NOTIFICATION.

IT is hereby notified for general information, under Rule 21 (*b*) of the Rules for Hospitals and Dispensaries, that the District Board of Backergunge, at its meeting held on the 19th July 1902, appointed the following gentlemen to form a Committee for the management of the Manpura Charitable Dispensary:—

Babu Krishna Sundar Biswas.
„ Ram Chandra Mazumdar.
Munshi Garib Hossein Talukdar.
„ Tofel Ahmed Chowdhuri.
Munshi Abdul Ali Mina.

GUNGA N. ROY, *Persl. Asst.*, for *Commr.*

DACCA COMMR.'S OFFICE, *the 7th August 1902.*

NOTIFICATION.

IT is hereby notified for general information, under Rule 21 (*b*) of the Rules for Hospitals and Dispensaries, that the District Board of Backergunge, at its meeting held on the 19th July 1902, appointed the following gentlemen to be members of the Dispensary Managing Committees mentioned above their names:—

Sarupkati Dispensary Committee.

1. Babu Ashutosh Dutta, *vice* Babu Basanta Kumar Dutta, deceased.
2. „ Bidhu Badan Dutta, *vice* Babu Kali Kanta Dutta, deceased.

Tazumaddi Dispensary Committee.

1. Babu Raj Behari Nandi, *vice* the Tahsildar, Court of Wards' Estates, Chandpur, resigned.
2. „ Ananda Chandra Mukhati, *vice* Babu Ananda Mohan Das, resigned.
3. „ Nikunja Nath Chakravarti, *vice* Babu Gopi Mohan Choudhuri, resigned.
4. Maulvi Khabiral Huq, *vice* Munshi Mirzam Mina, resigned.
5. Babu Jadab Chandra Banerjea, Sub-Inspector of Police, Tazumaddi.

Backergunge Dispensary Committee.

1. Babu Anath Bandhu Nandi, Sub-Inspector of Police, Backergunge.

GUNGA N. ROY, *Persl. Asst.*, for *Commr.*

DACCA COMMR.'S OFFICE, *the 7th August 1902.*

The Calcutta Gazette.

WEDNESDAY, AUGUST 13, 1902.

PART IA.

Orders and Notifications by the Government of India, &c.

[*Reprinted from the "Gazette of India."*]

The following orders, issued by the Government of India in the Home Department, are republished for general information.

C. E. BUCKLAND,
Chief Secy. to the Govt. of Bengal.

NOTIFICATIONS.

ECCLESIASTICAL.

Simla, the 7th August 1902.

No. 309.—The Most Reverend the Lord Bishop of Calcutta has granted Mr. A. M. Dunne, Registrar of the Diocese of Calcutta, leave for three months and twenty days, with effect from the 31st July 1902, or the subsequent date on which he may avail himself of it.

No 310.—The Most Reverend the Lord Bishop of Calcutta has appointed Mr. A. Caspersz, Barrister-at-Law, to officiate as Registrar of the Diocese of Calcutta, during the absence, on leave, of Mr. A M Dunne.

J. P. HEWETT,
Secy. to the Govt. of India.

The following orders, issued by the Government of India in the Foreign Department, are republished for general information.

C. E. BUCKLAND,
Chief Secy. to the Govt. of Bengal.

NOTIFICATIONS.

Simla, the 7th August 1902.

No. 1292G.—The Governor-General in Council is pleased to recognise the appointment of Dr. E. A. Voretzsch, as Acting Consul-General for Germany at Calcutta, during the absence, on leave, of Baron Speck von Sternburg.

The 8th August 1902.

No. 1303G.—The following changes are made in the graded list of the Political Department:—

Consequent on the return from privilege leave of Mr. T. C. Edwards, of the Indian Civil Service, an Officiating Political Agent of the 4th class, and with effect from the 7th July 1902,—

* * * * * * * *

Mr. E. V. Gabriel, of the Indian Civil Service, an Officiating Political Assistant of the 1st class (on privilege leave), reverts to Officiating Political Assistant of the 2nd class.

* * * * * * * *

Consequent on the grant of privilege leave to Mr. R. C. H. M. King, of the Indian Civil Service, an Officiating Political Agent of the 4th class, and with effect from the 15th July 1902,—

* * * * * * * *

Mr. E. V. Gabriel, of the Indian Civil Service, an Officiating Political Assistant of the 2nd class (on privilege leave), to officiate as a Political Assistant of the 1st class.

* * * * * * * *

H. S. BARNES,
Secy. to the Govt. of India.

The following orders, issued by the Government of India in the Finance and Commerce Department, are republished for general information.

C. E. BUCKLAND,
Chief Secy. to the Govt. of Bengal.

NOTIFICATION.

LEAVE AND APPOINTMENTS.

Simla, the 8th August 1902.

No. 4327P.—Mr. O. T. Barrow, Accountant-General, Bombay, is granted privilege leave for two months and thirty days, with effect from the 3rd of August 1902.

E. N. BAKER,
Offg. Secy. to the Govt. of India.

The following order, issued by the Government of India in the Military Department, is republished for general information.

C. E. BUCKLAND,
Chief Secy. to the Govt. of Bengal.

VOLUNTEER CORPS.

APPOINTMENTS, PROMOTIONS AND RESIGNATIONS.

Simla, the 8th August 1902.

No. 734.—3rd (Cadet) Battalion, Calcutta Volunteer Rifles—

Lieutenant Harry Richardson Clark to be Captain, with effect from the 17th July 1902, *vice* Fleming, resigned.

Frederick Bertram Smith, Gentleman, to be Lieutenant, with effect from the 18th July 1902, *vice* Eliot, transferred to the supernumerary list.

Charles Anderden Shavier, Gentleman, to be Second-Lieutenant, with effect from the 18th July 1902, *vice* Toomey, transferred to the Bangalore Rifle Volunteers.

John James Meikle, Gentleman, to be Second-Lieutenant, with effect from the 21st July 1902, *vice* Spencer, promoted.

No. 739.—2nd (Presidency) Battalion, Calcutta Volunteer Rifles—

Second-Lieutenant James Mackenzie resigns his commission, with effect from the 19th July 1902.

E. G. BARROW, *Major-General,*
Secy. to the Govt. of India.

The Calcutta Gazette.

WEDNESDAY, AUGUST 13, 1902.

PART IB.

ORDERS BY THE LIEUT.-GOVERNOR OF BENGAL.

MUNICIPAL AND LOCAL.

NOTIFICATIONS.

No. 2074L.S.-G.—The 5th August 1902.—It is hereby notified that, under section 7 of the Bengal Local Self-Government Act, III of 1885, the following gentlemen have been elected to be members of the District Board of 24-Parganas:—

24-Parganas.

Local Boards by which elected.		Names of Members.
Alipore	...	Babu Nanda Lal Sarkar. „ Brojendra Kumar Ghose. „ Siddeswar Roy Chowdhury.
Barasat	...	Babu Trailakhya Nath Haldar. „ Sham Lal Mukerji. Rai Kali Bhosun Ghose Bahadur. Mr. S. C. Biswas.
Basirhat	...	Babu Tarook Das Banerjee. „ Harish Chundra Mullick.
Diamond Harbour	...	Babu Jogendra Nath Bosu Mullick. „ Radhika Nath Bose. „ Upendra Nath Bosu.

The following gentlemen are appointed, under section 7 of the Act, to be members of the Board:—

Rai Money Lall Banerjee Bahadur.
Moharaja Sir Norendra Krishna Bahadur.
Moharaj Kumar Reshee Case Law.
Raja Peary Mohun Mookerji.
Hon'ble Shahebzada Mahamed Bukhtyar Shah, C.I.E.
Maulvi Gholam Qassim, Khan Bahadur.
Babu Brojendra Kumar Roy Chowdhury.
Mr. R. D. Mehta, C.I.E.
The Subdivisional Officer, Diamond Harbour ...
„ „ „ Barasat ...
„ „ „ Basirhat ...
„ Deputy Inspector of Schools, 24-Parganas ...
Ex-officio.

No. 2077M.—The 5th August 1902.—It is hereby notified that, under section 59 of the Bengal Municipal Act, III of 1884, as modified up to 1st November 1896, the Lieutenant-Governor approves the election by the Commissioners of the Revilganj Municipality, in the district of Saran, of Captain C. Lane, I.M.S., to be their Chairman, *vice* Babu Jagannath Prasad, resigned.

Saran.

No. 2078M.—The 5th August 1902.—It is notified for general information that the Declaration No. 302M., dated the 20th January 1902, published at page 17, Part 1B of the *Calcutta Gazette* of the 22nd January 1902, for the acquisition of a plot of land required by the Debhatta Municipality for a cattle-pound in the village of Debhatta, pargana Maihatty, zilla Khulna, is hereby cancelled.

Khulna.

No. 2082M.—The 5th August 1902.—It is hereby notified that, under section 17 of the Bengal Municipal Act, III of 1884, as modified up to 1st November 1896, the Lieutenant-Governor is pleased to appoint the following gentlemen to be Commissioners of the Sonamukhi Municipality, in the district of Bankura:—

Bankura.

Babu Shoshi Shekhar Banerji.	Babu Durga Gati Mukherjee.
„ Kunja Behari Nandi.	„ Golam Chandra De.
„ Kirti Chandra Banerjee.	„ Srikanta Roy.
„ Gopal Chandra Das.	„ Ishan Chandra Dutta.

Babu Nanda Lal Shome.

2. The Lieutenant-Governor is also pleased to appoint, under section 23 of the Act, the Subdivisional Officer of Vishnupur to be the Chairman of the Municipality.

No. 2090L.S.-G.—The 6th August 1902.—It is hereby notified for general information that, under section 6, clause (c) of the Bengal Ferries Act, I of 1885, the Lieutenant-Governor is pleased to establish new public ferries at Ramgurh over the Daha and at Sripur over the Jharai, in the district of Saran.

Saran.

2. The Lieutenant-Governor is also pleased, in the exercise of the power conferred on him by section 35 of the said Act, to direct that the said ferries shall be managed by the District Board of Saran, and that all the proceeds of the ferries, and all the fines levied and compensation received under the said Act in respect thereof, shall be paid into the District Fund.

No. 2185L.S.-G.—The 7th August 1902.—It is hereby notified that, under section 19 of the Bengal Local Self-Government Act, III of 1885, the Lieutenant-Governor is pleased to appoint Babu Chandra Sikhar Mukherji to be a member of the Khurda Local Board, in the district of Puri, *vice* Babu Jogendra Narayan Mitra, resigned.

Puri.

No. 2187L.S.-G.—The 7th August 1902.—It is hereby notified that, under section 19 of the Bengal Local Self-Government Act, III of 1885, the Lieutenant-Governor is pleased to appoint Babu Hara Krishna Mohanty to be a member of the Khurda Local Board, in the district of Puri, *vice* Babu Saradanandan Das, resigned.

Puri.

No. 2193L.S.-G.—The 8th August 1902.—It is hereby notified for general information that, under section 6, clause (*b*) of the Bengal Ferries Act, I of 1885, the Lieutenant-Governor is pleased to take possession of the private ferry across the Damodar at Gar-Chumuk, in the Uluberia subdivision of the district of Howrah, and to declare it to be a public ferry.

Howrah.

2. The Lieutenant-Governor is also pleased, in the exercise of the power conferred on him by section 35 of the said Act, to direct that the aforesaid public ferry shall be managed by the District Board of Howrah, and that all the proceeds of the ferry, and all the fines levied and compensation received under the said Act in respect thereof, shall be paid into the District Fund, with effect from the date of this notification.

No. 2195L.S.-G.—The 8th August 1902.—It is hereby notified that, under clause 2, section 6 of the Bengal Local Self-Government Act, III of 1885, the Lieutenant-Governor intends to establish a Local Board in the Gobindpur subdivision of the district of Manbhum, unless good reasons are shown to the contrary within one month from the date of the publication of this notification within the area affected.

Manbhum.

No. 2199L.S.-G.—The 8th August 1902.—It is hereby notified that, under sections 7 and 19 of the Bengal Local Self-Government Act, III of 1885, the Lieutenant-Governor is pleased to appoint the Special Sub-Registrar of Dacca to be an *ex-officio* member of the District Board of Dacca, *vice* the Executive Engineer, Dacca.

Dacca.

No. 2202M.—The 11th August 1902.—It is hereby notified for general information that the Lieutenant-Governor intends, in the exercise of the power vested in the Local Government by section 221 of the Bengal Municipal Act, III of 1884, as modified up to 1st November 1896, and in accordance with the recommendation of the Commissioners of the Muzaffarpur Municipality, in the district of Muzaffarpur, made at a meeting, to extend the provisions of Part X of the said Act to the above Municipality, unless good reasons are shown to the contrary within one month from the date of the publication of this notification within the Municipality.

Muzaffarpur.

No. 2204M.—The 11th August 1902.—Whereas a notification No. 831T M., dated the 7th June 1902, was published at page 123, Part IB of the *Calcutta Gazette* of the 11th June 1902, declaring the intention of the Lieutenant-Governor to extend the provisions of Part IX of the Bengal Municipal Act, III of 1884, as modified up to 1st November 1896, to the areas, as specified below, in Ward No. III of the South Dum-Dum Municipality, in the district of the 24-Parganas; and whereas no objection has been raised to the proposal within one month from the date of the publication of the above notification within the Municipality, it is hereby notified for general information that, in the exercise of the power vested in the Local Government by section 221 of the Act, and in accordance with the recommendation of the Commissioners of the South Dum-Dum Municipality, made at a meeting, the Lieutenant-Governor sanctions the extension of the above provisions of the Municipal Act to the said portions of the Municipality:—

24-Parganas.

I.—Area of 1,000 feet on each side of the Dakhindari road from the Dakhindari Railway Bridge to the north of Babu Umbica Charan Mitter's garden, holding No. 61.

II.—Area of 1,000 feet on each side of the Jessore road from the Belgachia Railway Bridge to the Bagzalla khal.

Under section 86 (*f*) of the Act, the Lieutenant-Governor also sanctions the levy, by the Municipal Commissioners, of fees for the cleansing of private privies and cess-pools within the aforesaid areas of the Municipality.

No. 2226L.S.-G.—The 11th August 1902.—It is hereby notified for general information that, under section 6, clause (*c*) of the Bengal Ferries Act, I of 1885, the Lieutenant-Governor is pleased to establish two new public ferries over the river Hooghly, in the district of Midnapore—

Midnapore.

(1) Between Mud Point, in the district of the 24-Parganas, and Talpaty, in the district of Midnapore, and

(2) Between Mud Point, in the district of the 24-Parganas, and Terapakheia in the district of Midnapore.

E. W. COLLIN,
Offg. Secy. to the Govt. of Bengal.

DECLARATION.

No. 2138M.—The 6th August 1902.—Whereas it appears to the Lieutenant-Governor of Bengal that land is required to be taken up by Government at the expense of the Chandpur Municipality for a public purpose, viz., for widening the Circular Road and excavating a tank in the villages of Sriramdi and Bishundi, pargana Purchandi, zilla Tippera, it is hereby declared that for the above purpose certain plots of land measuring, more or less, 3 bighas 13 cottahs 5 chitaks of standard measurement, are required. The boundaries of the land are as follow:—

Tippera.

Plot No. 1.—On the north, south and west Municipal ditch and road, and on the east ditch of Chandra Kant Mukharjee and others.

" " *2.*—On the north tank, and on the south, east and west Municipal road.

" " *3.*—On the north and south P. C. Bhattacharjee's land, on the east khal, and on the west tank.

" " *4.*—On the north, south and west Municipal road, and on the east tank.

" " *5.*—On the north and east Municipal road, on the south khal and tank, and on the west tank.

" " *6.*—On the north Srish Chandra Chatterjee, Purna Chandra Bhattacharjee and Kali Prosonno Rai Chaudhuri and others' land, on the south and west Municipal road, and on the east tank.

A plan of the land may be inspected in the office of the Collector of Tippera.

This declaration is made, under the provisions of section 6 of Act I of 1894, to all whom it may concern.

E. W. COLLIN,
Offg. Secy. to the Govt. of Bengal.

DECLARATION.

No. 2142L.S.-G.—The 6th August 1902.—Whereas it appears to the Lieutenant-Governor of Bengal that land is required to be taken up by Government at the expense of the District Board of Saran for a public purpose, viz., for Hardia Inspection Bungalow, in the village of Chemanpura, pargana Madhal, zilla Saran, it is hereby declared that for the above purpose a piece of land measuring, more or less, 4 cottahs of standard measurement, is required. The land is bounded on the north by the zerat land of Bhagan Singh and Chaudhari Singh, on the south by the District Board road, on the east by the zerat land of Bhagan Singh, and on the west by the zerat land of Dharamdeo Singh and Kunjan Singh.

Saran.

A plan of the land may be inspected in the office of the Land Acquisition Deputy Collector, Saran.

This declaration is made, under the provisions of section 6 of Act I of 1894, to all whom it may concern.

E. W. COLLIN,
Offg. Secy. to the Govt. of Bengal.

DECLARATION.

No. 2189M.—The 8th August 1902.—Whereas it appears to the Lieutenant-Governor of Bengal that land is required to be taken up by Government at the expense of the Calcutta Municipality for a public purpose, viz., for a new city cemetery at Jadubpur, it is hereby declared that for the above purpose pieces of land belonging to the estates of late Prosonno Coomar Tagore and Madhub Chandra Chatterjee and to Radha Mohan Mandal, Banku Behari Mandal and others, and leased out to Dr Kali Nath Mukherji, Judhisthir Sardar, Oli Mahammad Mistry, Habyulla Mistry, Abdul Rahim, late Baburam Banerjee, Yasin Mistry, Bhusan Ghosh, Elahibux Haji, Banee Madhub Ghosh, Panchu Mandal, Nojim Mistry, Dr. Kader Nath Banerjee, Hari Mohun Ghosh, Boloram Nusker, Bhootee Haji, Mothur Mistry, Kalim Mondal, Bhunda Mulla, Rajab Mistry, Machan Mistry, Meheruddi Mulla, Isan Mistry, Mothur Molla, Kenaram Koyal, Nemai Molla, Prosonno Chowdhury, Roma Nath Ghosal, Gosain Das Dutt, Gopal Mordhon Meah, Gomani Mondol, Sukro Molla, Sabjan Bibee, Khalil Mondol, Srinath Nasker, Haran Chal, Hari Karmokar, Dheran Chowdhury and others in mauza Dhakuria and Jadubpur, in thana Tollygunge, district 24-Parganas, measuring, more or less, 200 bighas, are required. The boundaries of the lands are as follow:—

24-Parganas.

On the north—The remaining portions of the lands belonging to the estate of the late Prosonno Coomar Tagore and leased out to Dr. Kali Nath Mukherji, Abdul Rahim, Judhisthir Sardar, Oli Mahammad Mistry, Habyulla Mistry and Baburam Banerjee,

On the south—A public road,

On the east—South-Eastern State Railway, and

On the west—Gariahaut Road.

A plan of the land may be inspected at the office of the Commissioners.

This declaration is made, under the provisions of section 6 of Act I of 1894, to all whom it may concern.

E. W. COLLIN,
Offg. Secy. to the Govt. of Bengal.

DECLARATION.

No. 2201M.—The 11th August 1902.—Whereas it appears to the Lieutenant-Governor of Bengal that land is required to be taken up by Government at the expense of the Brahmanbaria Municipality for a public purpose, viz., for widening the new approach to the fish market at Brahmanbaria, in the village of Brahmanbaria, pargana Satar Khandal, zilla Tippera, it is hereby declared that for the above purpose a piece of land measuring, more or less, 6½ chitaks of standard measurement, is required. The land is bounded on the north by Municipal Road, on the south by Municipal Trunk Road, on the west by Kali Das Shaha's shop, and on the east by Pokan Shaha's hop .

Tippera.

A plan of the land may be inspected in the office of the Collector of Tippera.

This declaration is made, under the provisions of section 6 of Act I of 1894, to all whom it may concern.

E. W. COLLIN,
Offg. Secy. to the Govt. of Bengal.

DECLARATION.

No. 2207M.—The 11th August 1902.—Whereas it appears to the Lieutenant-Governor of Bengal that land is required to be taken up by Government at the expense of the Panihati Municipality for a public purpose, viz., for improvement of the burning ghat at Panihati, in the village of Panihati, pargana Calcutta, zilla 24-Parganas, it is hereby declared that for the above purpose a piece of land measuring, more or less, 2 cottahs 6 chitaks of standard measurement, is required. The land is bounded on the north by land in possession of Dina Nath Kundu and Ram Krishna Kundu, on the east by public road, on the south by pathway to the existing burning ghat, and on the west by the existing burning ghat of Panihati and land in possession of Dina Nath and Ram Krishna Kundu.

24-Parganas.

A plan of the land may be inspected in the office of the Commissioners of the Panihati Municipality.

This declaration is made, under the provisions of section 6 of Act I of 1894, to all whom it may concern.

E. W. COLLIN,
Offg. Secy. to the Govt. of Bengal.

DECLARATION.

No. 2211M.—The 11th August 1902.—Whereas it appears to the Lieutenant-Governor of Bengal that land is required to be taken up by Government at the expense of the South Dum-Dum Municipality for a public purpose, viz., for the construction of office and dispensary buildings for the said Municipality, in the village of Padrihata, pargana Magura, zilla 24-Parganas, it is hereby declared that for the above purpose a piece of land measuring, more or less, 1 bigha of standard measurement, is required. The land is bounded on the north by Habu Ghose's house, on the south by Dum-Dum or Cossipore road, on the east by Khobia Kasainee's house and Bhodu Kassai's tank, and on the west by Padrihata busti road.

24-Parganas.

A plan of the land may be inspected in the office of the Deputy Collector of Barasat.

This declaration is made, under the provisions of section 6 of Act I of 1894, to all whom it may concern.

E. W. COLLIN,
Offg. Secy. to the Govt. of Bengal.

The Calcutta Gazette.

WEDNESDAY, AUGUST 13, 1902.

PART II.

Advertisements.

[N. B.—Advertisements, Notices, &c., intended for insertion in this part of the Gazette cannot be received after Noon on Monday.]

LAND SALE NOTICES.

Advertisement of Sale.

NOTICE is hereby given that the proprietary right of Government, as specified in the conditions of sale below, to the undermentioned estate, situated in the district of Rajshahi, will be put to sale at the Rajshahi Collectorate on the 1st September 1902, corresponding with 16th Bhadra 1309 (B.S.)

The purchaser will be subject to the following conditions of sale:—

Conditions of Sale.

1st.—The estate to be sold to the highest bidder above the upset price, which will be fixed by the Collector at the time of sale. The purchaser of this estate will be considered as the proprietor of the estate, and the entire proprietary right of Government in such estate will be transferred to him, subject to the revenue fixed in perpetuity.

2nd.—The sale to be subject to existing leases and to the rights conferred by the settlement proceedings and by the laws in force, and purchasers to be bound to respect the rights of resident cultivators who have signed the schedule of assessment prepared by the revenue authorities.

3rd.—If the amount of purchase-money do not exceed Rs. 100, the whole amount to be paid down at once.

4th.—If the amount of purchase-money exceed Rs. 100, one-fourth of the amount bid to be immediately deposited. If the balance be not paid by noon of the fifteenth day after the sale, reckoning the day of sale as one, or, if that day be a close holiday, then by noon of the first succeeding office day, the sale is to be cancelled (the sum deposited being forfeited to Government), and the estate to be again put up to sale at the risk of the defaulting purchaser, after issue of advertisement, as in the case of original sale.

Number on the district roll.	Name of estate and pargana.	Approximate area in acres.	Government revenue assessed.	Remarks.
1991	Mauza Bhadum, pargana Mehamanshahi ...	A. R. P. 179 3 10$\frac{1}{2}$	Rs. A. P. 357 9 6	

Rajshahi Collectorate, the 16th July 1902.

F. R. Rox, Collector.

Notification A.

NOTICE is hereby given, under sections 6 and 13, Act XI of 1859, that the undermentioned estates and shares of estates in the district of Dinajpur will be put up for sale at the office of the Collector of that district on the 24th September 1902 at 12-30 for arrears of revenue and other demands which by law are realisable as arrears of land revenue.

When in columns 5, 7 and 9 of the appended statement it is stated that only a share is to be sold, it is to be understood that a separate account is kept for that share.

Tauzi No.	Name of mahal and pargana.	Sadar jama of whole estate.	Whether the whole estate is to be sold.	If only a share is to be sold, specification of such share or shares.	Names of proprietors of property to be sold.	If only a share is to be sold, the sadar jama of such share.	If the whole estate is to be sold, the arrears due from it.	If only a share is to be sold, the arrears due from it.
1	2	3	4	5	6	7	8	9
143	Durgapur, pargana Debikote.	Rs. A. P. 6,924 12 7	No ...	Residue share 12 annas ... All other shares than that specified will be excluded from the sale.	Dinobundhu Nandi Chaudhuri and others.	Rs. A. P. 5,193 10 2½	Rs. A. P. ...	Rs. A. P. 44 8 8

Dinajpur Collectorate, the 29th July 1902. J. H. E. GARRETT, Collector.

Notification A.

NOTICE is hereby given, under sections 6 and 13, Act XI of 1859, that the undermentioned estates and shares of estates in the district of Tippera will be put up for sale at the office of the Collector of that district on the 26th September 1902 at 12 o'clock for arrears of revenue and other demands which by law are realisable as arrears of land revenue.

When in columns 5, 7 and 9 of the appended statement it is stated that only a share is to be sold, it is to be understood that a separate account is kept for that share.

Tauzi No.	Name of mahal and pargana.	Sadar jama of whole estate.	Whether the whole estate is to be sold.	If only a share is to be sold, specification of such share or shares.	Names of proprietors of property to be sold.	If only a share is to be sold, the sadar jama of such share.	If the whole estate is to be sold, the arrears due from it.	If only a share is to be sold, the arrears due from it.
1	2	3	4	5	6	7	8	9
365	Taluq Sribatsha Das, pargana Gunanundi.	Rs. A. P. 1,852 11 7	Whole ...	.....	Srimati Monyakhoya Chowdhurani, manager on behalf of minor Harendra Chandra *alias* Har Kumar Pal Chowdhury and others.	Rs. A. P.	Rs. A. P. 16 12 2	Rs. A. P. .....
480	Gazipur Monipur Chur No. 24-71, pargana Maizardi.	1,233 1 0	Do. ...	.....	Kashi Chandra Pal Chowdhury and others.	.....	64 14 4	.....
1925	Char near Nogarerkandi No. 211, pargana Uttershahapur.	1,296 10 9	Do. ...	.	Ishan Chandra Dutt and others.		202 9 4	.....
1923-31	Pargana Hardakhat Doulatpurjoar: the term is from 1321 to 1310 B.S.	1,379 2 10	Do.		Bepra Charan Ghosh and others.	... .	191 1 0	.....
2299	Shonapur Tajpur, pargana Zasira.	876 10 0	Do.		Tajammal Ali Chowdhury and others.	.....	200 0 0	.....

Tippera Collectorate, the 26th July 1902. H. W. SCROOPE, Collector.

Notice of Sale for Arrears of Revenue.

NOTICE is hereby given, under section VI, Act XI of 1859, read with Act VII (B.C.) of 1868 and Act II (B.C.) of 1871, that the undermentioned Noabad taluks within the Cox's Bazar khas mahal, in the district of Chittagong, will be put up to public and unreserved sale at the Collector's office of that district on the 2nd September 1902 for arrears and cesses remaining unpaid on the $\frac{25}{26}$th May 1902 :—

Name of tenure.	Name of mauza, thana and mahal.	Name of talukdar.	Sadar Jama.		Amount of arrear for which the tenure is to be sold.		
			Rent.	Cesses.	Rent.	Cesses.	Total.
1	2	3	4	5	6	7	8
47 / 10—80	Thana Ramoo, mauza Khuruskel, taluk Tajannisa.	Mozaffar Ahmad, son of Asharaf Ali Chowdhuri, of Chowfoldandi.	Rs. A. P. 2,648 8 0	Rs. A. P. 176 13 0	Rs. A. P. 590 6 0	Rs. A. P. 58 15 6	Rs. A. P. 649 5 6
296 / 249—302	Thana Chakaria, mauza Rajakhali, taluk Bibi Esprak.	Nesamat Ali Chowdhuri, son of Mohammad Rafi Chowdhuri, of Bora Khira.	1,005 10 0	215 12 6	1,578 4 0	431 9 0	2,009 13 0

Chittagong, the 19th July 1902. A. H. VERNEDE, Covtd. Depy. Collr., *for* Collr.

NOTICE is hereby given, under sections 6 and 13, Act XI of 1859, that the undermentioned estate or share of estate in the district of Darbhanga will be put up for sale at the office of the Collector of that district on the 5th September 1902, corresponding with 17th Bhado 1309 Fasli, at 12 A.M. on Friday for arrears of revenue and other demands, which by law are realizable as arrears of land revenue.

When in columns 5, 7 and 9 of the appended statement it is stated that only a share is to be sold, it is to be understood that a separate account is kept for that share. All other shares besides that specified will be excluded from the sale.

Tauzi No.	Name of estate, thana or pargana.	Sadar jama of whole estate.	Whether the whole estate is to be sold.	If only a share is to be sold, specification of such share or shares.	Names of proprietors of property to be sold.	If only a share is to be sold, the sadar jama of such share.	If the whole estate is to be sold, the arrears due from it.	If only a share is to be sold, the share due from it.
1	2	3	4	5	6	7	8	9
11810	Ahtari, pargana Bharmara, thana Darbhanga.	Rs. A. P. 1,631 2 4	Whole ...	.....	Lala Binda Prasad, Lala Shew Charan Lal, Lala Chedi Lal, Lala Sital Prasad, Lala Jagar Nath Prasad, &c.	.....	Rs. A. P. 457 11 9	.....

Darbhanga Collectorate, the 24th July 1902.

S. L. MADDOX, Collector.

APPENDIX XXX.

[See Chapter III, Rule 9.]

Advertisement of Sale.

NOTICE is hereby given that the undermentioned plots of land, no longer required by Government, situated along the Assam-Bengal Railway, in the district of Chittagong, will be put up to sale at 11 o'clock on Monday the 22nd September 1902, corresponding with the 6th of Ashwin 1309 B.S., at the Collector's office, Chittagong.

The purchasers of the several plots of land will be subject to the following conditions :—

1st.—The purchasers will have no power to make any excavation on the land nearer than fifteen feet from the Railway fencing, or plough the land closer than three feet from its foundation.

2nd.—If the amount of purchase-money does not exceed Rs. 100, the whole amount must be paid down at once.

3rd.—If the amount of purchase-money exceeds Rs. 100, one-fourth of the amount must be immediately deposited. If the balance be not paid by noon of the fifteenth day after the sale, reckoning the day of sale as one, or if that day be a close holiday, then by noon of the first succeeding office day, the sale shall be cancelled, the sum deposited being forfeited to Government and the lot again put up for sale at the risk of the defaulting purchaser, after issue of advertisement, as in the case of original sale.

4th.—The plots of land will be sold revenue-free to the highest bidders.

5th.—The purchasers shall be put in possession on receipt by the Collector of the orders of the Board confirming the sales.

Consecutive lot number.	Name of district.	Mauza.	Number of mile on which land is situate.	Situated on which side of the Railway.	Approximate area of lot in kanis and acres.		Land excluded from sale from each plot.		Commencement and termination of lot.	Boundary of lot.
					Maghi kani.	Acre.	Reasons for exclusion.	A. R. P.		
1	2	3	4	5	6		7		8	9
					Kani.	A. R. P.				
1	Chittagong ...	Bhatiary	8th mile	East side	43·83	17 2 5	Nil	Nil	Nil	Nil.
2	Ditto ...	Sonaicherry	14th do.	West side	28·57	11 1 27	,,	,,	,,	,,
3	Ditto ...	Bansberia	18th do.	Ditto	25·68	10 1 3	,,	,,	,,	,,
4	Ditto ...	Katgar	20th do.	East side	35·80	14 1 11	,,	,,	,,	,,
5	Ditto ...	Terial	27th do.	West side	29·87	11 2 38	,,	,,	,,	,,
6	Ditto ...	Wahedpur	33rd do.	Ditto	25·31	9 3 29	,,	,,	,,	,,
7	Ditto ...	Gobania	38th do.	Ditto	23·30	9 1 11	,,	,,	,,	,,
8	Ditto ...	Azamnagar	45th do.	East side	21·10	8 1 30	,,	,,	,,	,,

Chittagong, the 26th July 1902.

E. GRAKE, Collector.

SALE of patni rights of Biby Jorao Kumari Sahiba in Estate Mahomed Aminpur, tauzi No. 2989, which include the patni right in Baidyabti *hát* in village Sheoraphuli in thana Serampore, district Hooghly :—

No. of estate.	Name and residence of judgment-debtor.	Specification of judgment-debtor's interest to be sold.	Date fixed for sale.	Nature and amount of arrears.	Remarks.
2989	S. M. Biby Jorao Kumari Sahiba, of 147 Harabazar, Cotton Street, Calcutta.	The entire patni right held under Zamindar Maharaja Sir Jotendro Mohon Tagore, K.C.S.I., to whom she pays Rs. 46,156-14-6 annually as her patni rent. This patni includes also the patni right in Baidyabati *hát* in village Sheoraphuli in thana Serampore, district Hooghly.	25th September 1902, corresponding to B.S. 9th Aswin 1309.	Due on account of engagements Nos. 199, 116, 117, 162, 242, 243 and 311 in connection with the Howrah Drainage Scheme and engagement No. 1449 in connection with the Rajapore Drainage Scheme, Rs. 41,614-7-10.	Howrah Drainage Certificate Cases Nos. 1128 of 1898-99, 186, 187, 273, 104 and 274 of 1901-1902 and 494 and 214 of 1900-1901.

MAHESH CH. SEN, Certificate Officer, Hooghly,

Hooghly Collectorate, Certificate Department, the 21st of July 1902.

Notification A.

NOTICE is hereby given, under sections 6 and 13, Act XI of 1859, that the undermentioned estates and shares of estates in the district of Monghyr will be put up for sale at the office of the Collector of that district on the 18th August 1902 at noon for arrears of revenue and other demands which by law are realisable as arrears of land revenue.

When in columns 5, 7 and 9 of the appended statement it is stated that only a share is to be sold, it is to be understood that a separate account is kept for that share.

Tausi No.	Name of mahal and pargana.	Sadar jama of whole estate.	Whether the whole estate is to be sold.	If only a share is to be sold, specification of such share or shares.	Names of proprietors of property to be sold.	If only a share is to be sold, the sadar jama of such share.	If the whole estate is to be sold, the arrears due from it.	If only a share is to be sold, the arrears due from it.
1	2	3	4	5	6	7	8	9
		Rs. A. P.		*Permanently-settled Estates.*		Rs. A. P.	Rs. A. P.	Rs. A. P.
226	Katri Akhtayar pur, pargana Maldeh.	5,988 15 0	.....	The residuary share in the following mauzas :— A. G. C. B. 1. Katri Akhtayarpur ... ... 1 14 19 3 2 Maldeh Khurd ... ... 1 11 4 3 3. Maldeh buzurg asli main nagdeh, Dayanut, Chak dakhli ... 1 11 4 3 4. Sarba buzurg, Sarba khurd and Kalayanpur Sarba asli main Jamalpur, buzurg and Jamalpur khurd dakhli ... ... 1 11 4 3 5. Belao Subhanpur, Belao main Lutfpur and Padumpur and Bhimpur 1 11 4 3 6. Belari and Mohamedpur Belari ... 1 14 19 3 7. Badi chak dakhli Belari ... ... 1 14 19 3 8. Saidi ... ... 1 14 19 3 9. Kishunpur ... ... 1 14 19 3 All other shares besides that specified above are excluded from the sale.	Babu Gopal Lal and others.	612 12 0	.....	85 9 9
337	Shakerpur, pargana Pharkia.	1,096 4 0	Whole ...	.....	Birj Lal Singh and others.	.....	11 3 5	.....
626	Shirnia, pargana Balia.	1,073 13 0	.....	7a. 2g. 1c. 1k. ijmali share ... ... All other shares besides that specified above and the separate account No. 1 of Nawab Singh for Rs. 286-6 are excluded from the sale.	Ganga Pershad Sahu and others.)	501 1 0	.....	151 11 9
815	Sihanwan Karari, pargana Malki.	1,190 7 0	.....	Ijmali share which cannot be specified excluding the separate accounts— Rs. A. 2. Of Chettru Singh .. .. 113 0 3. ,, Kali Pershad Singh ... ... 213 6 5. ,, Kharag Singh ... ... 5 4 6. ,, Fazal Rahman, *alias* Sageruddin 2 5 7. ,, Gumani Rai ... ... 4 6 8. ,, Mahainsh Singh, &c. ... ... 43 9 9. ,, Bhim Singh, &c. ... ... 9 10 10. ,, Sibu Singh, &c. ... . 74 7 11. ,, Bhagwan Pershad, receiver of the estates of Suja Mahanth .. . 31 15 12. ,, Khanter Singh, &c. ... . 26 4 13. ,, Gano Singh, &c. ... ... 79 0 Total ... 603 2 All other shares, besides the ijmali share specified above and separate account No. 6 for Rs. 2-5, and separate account No. 10 for Rs. 74-7, are excluded from sale.	Lil Kanth Chowdhry and Saheb Chowdhry and others.	518 8 0	.....	133 1 6
1072	Baikunthpur, pargana Bhusari.	1,193 3 0	Whole ...	.....	Abunasar Jalaluddin, Manager of Mussamat Girjabati Kumri and others.	.....	17 11 1	.....
1166	Qasba Sheik Dih Haitampur, pargana Masjidpur.	1,026 5 0	.....	Ijmali share consisting of Sheikdih 16a., Hetampur 12a. 5g. All other shares besides that specified above are excluded from sale.	Turant Lal, &c. ...	946 9 0	.....	315 10 6
4420	Diara Gang Barar Sihanwan, pargana Malki.	2,881 8 0	.....	5a. 6g. 12r. ijmali share ... ... All other shares besides that specified above and the separate account No. 6 of Jhaman Singh for Rs. 207-8 are excluded from sale.	Kalli Singh and others.	953 14 0	.....	45 9 6
				Temporarily-settled Estates.				
1384	Tarapur Diara, pargana Monghyr.	13,797 13 0	Whole .	... .	Mussamat Jaunti Kumri, of Ulao, and others.	.....	383 14 0	.....
1406	Bhawanundpur *alias* Ramduri, pargana Malki.	10,980 15 0	Do. ..	.....	Jagutdhar Narayan Parshad, under the guardianship of mother Mussamat Tirbeni Kumri.	.....	5,340 8 8	.....
1483	Akbarpur Barari, pargana Malki.	1,536 11 0	Do. ...	.....	Udwant Singh and others.	.....	95 11 6	.....

Monghyr Collectorate, the 12th July 1902.

F. J. JEFFERIES, Offg. Collector.

Notification B.

NOTICE is hereby given, under sections 5 and 13, Act XI of 1859, that unless the arrears mentioned below are paid on or before the next latest date of payment, viz., the 28th June 1902, the undermentioned estates or shares of estates in the district of Tippera will be put up for sale at the office of the Collector of that district on the 26th September 1902 at 12 o'clock for the said arrears.

When in columns 5, 7 and 9 of the appended statement it is stated that only a share is to be sold, it is to be understood that a separate account is kept for that share.

Tauzi No.	Name of mahal and pargana.	Sadar jama of whole estate.	Whether the whole estate is to be sold.	If only a share is to be sold, specification of such share or shares.	Names of proprietors of property to be sold.	If only a share is to be sold, the sadar jama of such share.	If the whole estate is to be sold, the arrears due from it.	If only a share is to be sold, the arrears due from it.	Nature and amount of demand for which to be sold.
1	2	3	4	5	6	7	8	9	10
		Rs. A. P.				Rs. A. P.	Rs. A. P.	Rs. A. P.	Rs. A. P.
1925	Pargana Uttar Sahapur char near Nagarer Kandi, No. 211.	1,296 10 9	Whole ...	.....	Ishan Chandra Datta and others.	.....	202 9 4	.....	202 9 4

Tippera Collectorate the 29th May 1902.

H. W. SCROOPE, Offg. Collector.

Notification A.

NOTICE is hereby given, under sections 6 and 13, Act XI of 1859, that the undermentioned estates and shares of estates in the district of Muzaffarpur will be put up for sale at the office of the Collector of that district on the 8th September 1902, corresponding with 20th Bhado 1309 F.S., for arrears of revenue and other demands which by law are realisable as arrears of land revenue.

When in columns 5, 7 and 9 of the appended statement it is stated that only a share is to be sold, it is to be understood that a separate account is kept for that share.

Tauzi No.	Name of mahal and pargana.	Sadar jama of whole estate.	Whether the whole estate is to be sold.	If only a share is to be sold, specification of such share or shares.	Names of proprietors of property to be sold.	If only a share is to be sold, the sadar jama of such share.	If the whole estate is to be sold, the arrears due from it.	If only a share is to be sold, the arrears due from it.
1	2	3	4	5	6	7	8	9
		Rs. A. P.				Rs. A. P.	Rs. A. P.	Rs. A. P.
908/Rs.	Amwa Kalan Newazun, pargana Babra Champaran.	2,000 12 9	...	Residuary share, 5a. 7p. ... . All other shares besides that specified will be excluded from sale.	Babu Isre Prosad and others.	608 2 9	.....	17 9 7
1680	Baijnathpur Krishn Coomar, pargana Gadubsund.	671 8 1	The whole		Babu Durga Coomar Upadhea and others.	.....	161 3 0	.....
2485/Rs.	Pojhia-Basunt, Chukla Gurjaul, pargana Bisara.	1,693 10 7	.....	A. G. C. KT. Residuary share— Pojhia-Basunt ... ... 5 1 2 2 Barehia and Pojhia Zamin ... ... 5 1 2 2 Jahanabad ... ... 5 1 2 2 Ghataro-khas-zamin ... 5 1 2 2 Chuk Rahmat ... ... 5 1 2 2 Hansi Gharam ... ... 5 1 2 2 Ghataro-doolum ... ... 3 16 2 1 Raghoonathpur ... ... 3 16 0 0 All other shares besides that specified will be excluded from sale.	Babu Zoolumdhari Prosad Singh and others.	537 3 8	.....	106 3 5
5150	Poorab Chhupra Vishwnath Singh, pargana Nanpur.	642 6 7	The whole	.....	Babu Dabi Prosad Singh and others.	.. ...	33 10 9	.. ...
11277	Chatarbhoojpur Bhairo Missar, pargana Rutti.	648 2 2	Ditto ...	.....	Rai Manindra Bahadur, minor under the guardianship of Musamat Goolab Kuner, mother, and Babu Moti Chand and others.	..	849 3 2	.....
11714	Kamaldah, pargana Irsath.	855 13 4	Ditto ...	.....	Mirza Nazir Hossen and others.	.....	207 2 10	.....

Muzaffarpur Collectorate, the 25th July 1902.

E. V. LEVINGE, Collector

Notification.

NOTICE is hereby given, under sections 6 and 13, Act XI of 1859, that the undermentioned estates and shares of estates in the district of Shahabad will be put up for sale at the office of the Collector of that district on Thursday, the 28th August 1902, at 12 noon, corresponding with 9th Bhado 1309 F., for arrears of revenue and other demands which by law are realizable as arrears of land revenue.

When in columns 5, 7 and 9 of the appended statement it is stated that only a share is to be sold, it is to be understood that a separate account is kept for that share and the other share or shares in the estate are excluded from sale.

Tauzi No.	Name of mahal and pargana.	Sadar jama of whole estate.	Whether the whole estate is to be sold.	If only a share is to be sold, specification of such share or shares.	Names of proprietors of property to be sold.	If only a share is to be sold, the sadar jama of such share.	If the whole estate is to be sold, the arrears due from it.	If only a share is to be sold, the arrears due from it.
1	2	3	4	5	6	7	8	9
						Rs. A. P.	Rs. A. P.	Rs. A. P.
434	Mahuli Khurd, pargana Arrah.	550 0 0	Whole ...	.....	Rambaran Singh and others.	.....	190 15 6	.....
763	Koilwar, pargana Barahgawan.	7,770 12 7	Do. ...	.....	Kazi Mohamad Wahid Ashraf, Bishun Parshad, Seri Maharani Beni Parshad Kuari, Babu Saligram Singh and others, proprietors of 16 annas.	.....	*L. R. 1,053 5 11 T. M. 4 8 0 Do. 2 4 0 1,060 1 11	.....
803 Ijmal	Chancher, pargana Behia.	1,713 9 8	.....	Ijmali share to be sold is 5a. 4p. and other share is excluded from sale.	Dhankumar Chand, Basanta Kuar and others.	571 2 11	.....	74 3 3
1211 Ijmal	Suhia, pargana Behia ...	4,253 13 10	.....	Ijmali share to be sold is in Suhia 2a. 8p. Bharauli 5a. 4p. Other shares are excluded from sale.	Nund Lal, Ram Narain Singh and others.	644 15 3	.....	97 10 11
1369	Baruha, pargana Bhojpur.	870 10 8	Whole ...	.....	Jadunundan Singh, Raghunundan Singh and others.	.....	3 8 *5	.....
1798	Kusurpa, pargana Chausa.	830 11 6	Do. ...	.....	Bhugwat Sahai, Mussammat Dulahin, Rama Kuar, wife of Raja Ram, Rasbehari Lal and others proprietors of 16 annas.	.....	† L. R. 145 14 4 T. M. 6 0 0 151 14 4	.....
2153	Barahuli, pargana Chainpur.	511 9 2	Do.	.....	Ram Saroop Singh, Chandan Singh and others.	.....	92 1 2	.....
2188	Bairi Raghunathpur, pargana Chainpur.	589 4 6	Do. ...	.....	Sooraj Narain Singh, self and guardian of Adit Prashad Singh.	.....	184 6 10	.....
2908 Ijmal	Umanpore, pargana Chainpur.	5,942 6 4	.....	Ijmali share to be sold is in village— As. P. Patilabang ... ... 13 9 Umanpore ... ... 1 3 Sahijna ... ... 4 3 Chandrauli ... ... 16 0 Sariaon ... ... 8 6 Sotwabisopoor ... ... 12 0 Semaria ... ... 8 0 Choukhanda ... ... 16 0 Chak Bhagwat ... 8 0 Hurkutya ... ... 8 0 Ahidoura ... ... 16 0 Kutumanpore ... ... 16 0 Dhora Patisarwa ... 8 0 Saria Balbhadarpore 4 3 Kasthar ... ... 16 0 Kishunpura ... ... 11 0 Other shares are excluded from sale.	Ramdani Rai, Dudh Nath Rai and others.	2,111 12 1	.....	319 1 10
3006 3 and 7	Ruppur, pargana Chainpur.	14,486 15 9	.....	The share of separate account to be sold is—khata 3 in village Ora 8a. and khata 7, 8a. in village Ora. Other shares are excluded from sale with the exception of khata 1 which will also be sold.	Jageshar Singh and others Adhat Singh	254 13 10 255 0 0	.....	109 3 4 .....
3074 Ijmal	Sondhi, pargana Chainpur.	1,636 4 3	.....	Ijmali share to be sold is in village— As. Majhgaon ... ... 16 Baruna ... ... 8 Jignazamin ... ... 8 Madanpura ... ... 8 Sondhi Kasle Khandha 8 Mirga Rampur ... ... 8 Khargawan ... ... 8 Rajabandh ... ... 8 Share in mahula ... ... 8 Other shares are excluded from sale.	Kishunanund Sham Behari Lal *alias* Gopalall and others.	527 15 7	.....	205 5 5
3041	Pandaypatti, pargana Bhojpur.	620 3 0	Whole ...	.....	Sital Pershad, Kamlapat and others.	.....	108 5 9	.....

* These are the arrears due from khata 1 at March kist, and the sale is held under section XIV, Act XI of 1859.
† These are the arrears due from ijmali share for March kist, and the sale is held under section XIV, Act XI of 1859.

Arrah, the 24th July 1902.

H. COUPLAND, Collector.

Advertisement of Sale.

NOTICE is hereby given that the undermentioned plots of land, no longer required by Government, situated along the Assam-Bengal Railway, in the district of Noakhali, will be put up to sale at 12 o'clock on Monday, the 29th September 1902, corresponding with the 13th Ashwin 1809 B. S., in the office of the Collector of Noakhali—

Consecutive lot number.	Name of district.	Pargana and mauza.	Number of mile on which land is situate.	Situated on which side of the Railway.	Approximate area of lot in bighas and in acres.		Land excluded from sale from each lot.		Commencement and termination of lot.	Boundary of lot.
					B. K. C.	A. R. P.	Reasons for exclusion.	A. R. P.		
1	2	3	4	5	6		7		8	9
					Case No. 1.					
1	Noakhali	Pargana Bedrabad, mauza Sahadebpur.	56	South-west	1 8 12	0 1 30·80	.....	.....	.....	*North*—Village road. *South*—, *East*—, *West*— } Khal.
2	Ditto ...	Pargana Bedrabad, mauza Borahipur.	56	North-east	4 8 13	1 1 39·40	.....	.....	.....	*North*—Road to Railway station. *South*—Feni school compound. *East*—Ditch. *West*—Cart stand.
3	Ditto ..	Ditto ...	56	Ditto ...	5 0 7	1 2 25·60	.....	.....	.....	*North*—Cultivated land. *South*—Village road. *East*—Cultivated land. *West*—Tank.
					Case No. 2.					
4	Ditto ...	Pargana Alahabad, mauza Fatehpur.	58	South-west	0 11 9	0 0 30·60	.....	.....	.....	*North*—Railway land. *South*—, *East*—, *West*— } Cultivated land.
5	Ditto ...	Pargana Bedrabad, mauza Matbaria.	58	North ...	0 8 9	0 0 22·52	.....	.....	.....	*North*—Cultivated land. *South*—Railway land. *East*—, *West*— } Cultivated land.
6	Ditto ...	Ditto ...	58	North-east	0 5 0	0 0 13·04	.....	.....	.....	*North*—Cultivated land. *South*—Railway land. *East*—, *West*— } Cultivated land.
7	Ditto ...	Pargana Amirabad, mauza Fazilpur.	50	Ditto ...	0 13 14	0 0 36·72	.....	.....	.....	*North*—Cultivated land. *South*—Railway land. *East*—, *West*— } Cultivated land.
					Case No. 3.					
8	Ditto ...	Pargana Begamganj, mauza Rajnagar.	49	North ...	14 15 3	4 3 20·80	.....	.....	.....	*North*—Homestead land. *South*—Railway land. *East*—Muhuri river. *West*—Railway.

Noakhali, the 31st July 1902.

R. C. DAS, *for* Collector.

Notification A.

NOTICE is hereby given, under sections 6 and 13, Act XI of 1859, that the undermentioned estates and shares of estates in the district of Backergunge will be put up for sale at the office of the Collector of that district on the 26th September 1902 at 12 o'clock for arrears of revenue and other demands which by law are realisable as arrears of land revenue.

When in columns 5, 7 and 9 of the appended statement it is stated that only a share is to be sold, it is to be understood that a separate account is kept for that share.

Tauzi No.	Name of mahal and pargana.	Sadar jama of the whole estate.	Whether the whole estate is to be sold.	If only a share is to be sold, specification of such share or shares.	Names of proprietors of property to be sold.	If only a share is to be sold, the sadar jama of such share.	If the whole estate is to be sold, the arrears due from it.	If only a share is to be sold, the arrears due from it.
1	2	3	4	5	6	7	8	9
		Rs. A. P.				Rs. A. P.	Rs. A. P.	Rs. A. P.
1994	Taluq Biswa Nath Sen, of pargana Khanya Bahadurnagar.	570 0 11½	Whole estate.	.....	Ram Narain Sen and others.	.....	142 6 9	.....
2749	Taluq Durga Gangeswar of pargana Uttar Sahabazpur.	1,037 11 2½	.....	Separate account No. 1 for 8 annas' share.	Guru Prosanna Roy and others.	518 13 8	.....	54 6 5
4534	Char Sarikol of pargana Jaitra.	3,441 11 3	Whole estate.	.....	Mr. G. L. Garth and Mr. H. L. Weatheral, trustees to the estate of Tojambal Ali Choudhury and others.	.....	3,841 11 3	.....
4988	Char Jahapur of pargana Jaitra.	5,000 0 0	Ditto ...	.....	Ditto ...	.....	300 0 0	.....
5235	Gar Makarari, howla No. 1, of Char Tabgi of pargana Dakshin Sahabazpur.	3,677 0 0	Whole howla.	.....	Basanta Kumar Guha ..	.....	400 0 0	.....

Backergunge Collectorate, the 31st July 1902.

D. WESTON, *Collector.*

Notification A.

NOTICE is hereby given, under sections 6 and 13, Act XI of 1859, that the undermentioned estates and shares of estates in the district of Bogra will be put up for sale at the office of the Collector of that district on the 22nd September 1902 at noon for arrears of revenue and other demands which by law are realisable as arrears of land revenue.

When in columns 5, 7 and 9 of the appended statement it is stated that only a share is to be sold, it is to be understood that a separate account is kept for that share.

Tauzi No.	Name of mahal and pargana.	Sadar jama of the whole estate.	Whether the whole estate is to be sold.	If only a share is to be sold, specification of such share or shares.	Names of proprietors of property to be sold.	If only a share is to be sold, the sadar jama of such share.	If the whole estate is to be sold, the arrears due from it.	If only a share is to be sold, the arrears due from it.
1	2	3	4	5	6	7	8	9
12	Taraf Bihar, pargana Selbarsa.	Rs. A. P. 4,773 9 8½		The 1½mali or residue share, excluding the shares for which separate accounts have been opened, will be sold.	Mahamad Elahadad Khanpani and others.	Rs. A. P. 3,303 5 1½	Rs. A. P.	Rs. A. P. 97 6 5½

Bogra Collectorate, the 28th July 1902.

R. KRISHNA, Collector.

Notification A.

NOTICE is hereby given, under sections 6 and 13, Act XI of 1859, that the undermentioned estates and shares of estates in the district of Chittagong will be put up for sale at the office of the Collector of that district on the 8th September 1902 at 12 A.M. for arrears of revenue and other demands which by law are realizable as arrears of land revenue.

When in columns 5, 7 and 9 of the appended statement it is stated that only a share is to be sold, it is to be understood that a separate account is kept for that share.

Tauzi No.	Name of mahal and pargana.	Sadar jama of whole estate.	Whether the whole estate is to be sold.	If only a share is to be sold, specification of such share or shares.	Names of proprietors of property to be sold.	If only a share is to be sold, the sadar jama of such share.	If the whole estate is to be sold, the arrears due from it.	If only a share is to be sold, the arrears due from it.
1	2	3	4	5	6	7	8	9
4098 / 4119 / 3118	Thana Chakaria, taraf Sher Masta Khan Chowdhury.	Rs. A. P. 527 6 6	The whole estate will be sold.		Badiajjama, Abdul Majid and others.	Rs. A. P.	Rs. A. P. 60 4 5	Rs. A. P. ... .

The amount shown in column 8 represents the arrears due for kist ending 25th February 1902.

Chittagong Collectorate, the 28th July 1902.

E. GEAKE, Collector.

Notice of Sale for Arrears of Revenue.

NOTICE is hereby given, under section 6, Act XI of 1859, read with Act VIII (B.C.) of 1868 and Act II (B.C.) of 1871, that the undermentioned Noabad taluk in the district of Chittagong will be put up to public and unreserved sale at the Collector's office of that district on 2nd September 1902 at 12 noon for arrears of rents and cesses remaining unpaid on the 25th May 1902:—

No. of tenure.	Name of mauza, thana and mahal.	Name of proprietor.	SADAR JAMA.		AMOUNT OF ARREARS FOR WHICH THE TENURE IS TO BE SOLD.		
			Rent.	Cess.	Rent.	Cess.	Total.
1	2	3	4	5	6	7	8
90 / 122	Mahal Noabad, mauza Khurulia, thana Ramu, taluk Baksha Ali.	General Manager, Court of Wards, on behalf of the estate of Mahabat Ali Chowdhury.	Rs. A. 698 9	Rs. A. P. 92 8 6	Rs. A. 2,554 4	Rs. A. 370 2	Rs. A. 2,924 6

Chittagong, the 2nd August 1902.

A. H VERNEDE, *for* Collector.

Notification.

NOTICE is hereby given, under sections 6 and 13, Act XI of 1859, that the undermentioned estates or shares of estates in the district of Jessore will be put up for sale at the Collector's office of that district on 15th September 1902 for arrears of revenue and other demands which by the Regulations and Acts in force are directed to be realised in the same manner as arrears of revenue.

When in columns 5, 7 and 9 of the appended statement it is stated that only a share is to be sold, a separate account is kept for such share and the other share or shares in the estate are excluded from the sale.

Tauzi No.	Name of mahal and pargana.	Sadar jama of whole estate.	Whether the whole estate is to be sold.	If only a share is to be sold, specification of such share or shares.	Names of proprietors of property to be sold.	If only a share is to be sold, the sadar jama of such share.	If the whole estate is to be sold, the arrears due from it.	If only a share is to be sold, the arrears due from it.
1	2	3	4	5		7	8	9
5045	Dihi Chapra, pargana Mahamudshahi.	Rs. A. P. 655 10 10	Yes ...	... ...	Devnath Ghosh, Radha Charan Ghosh.	Rs. A. P.	Rs. A. P. 9 1 7	Rs. A. P. .....

Jessore Collectorate, the 6th August 1902.

W. N. DELEVINGNE, Collector.

Statement of the Affairs of the Bank of Bengal for the week ending 5th August 1902.

LIABILITIES.

	Rs.	A.	P.
Capital paid up	2,00,00,000	0	0
Reserve Fund	1,14,00,000	0	0
Public Deposits at Head Office ... ... Rs 69,62,360 1 8			
Ditto ditto at Branches „ 1,20,29,708 14 4	1,89,92,069	0	0
Other Deposits at Head Office and Branches ...	8,74,30,027	3	2
Bank Post Bills, &c.	3,38,259	13	8
Sundries	14,52,222	15	2
Rupees ...	13,95,12,579	0	0

ASSETS.

	Rs.	A.	P.
Government securities	1,57,69,560	0	0
Other authorised investments	66,35,160	0	0
Loans on Government and other authorised securities	2,72,01,509	5	7
Accounts of credit on ditto ditto	1,55,97,644	7	7
Bills discounted and purchased	1,82,86,034	0	4
Balances with other Banks	14,82,090	10	11
Bullion	.....		
Dead Stock	16,03,787	13	9
Stamps	12,445	13	3
Sundries	8,71,476	14	3
	8,74,59,709	1	8
Cash & Currency Notes at Head Office* ... Rs. 2,86,02,565 7 0			
Cash & Currency Notes at Branches† ... „ 2,34,50,304 7 4	5,20,52,869	14	4
Rupees ...	13,95,12,579	0	0

* Includes Sovs. and ½ Sovs., value Rs. 1,15,980 0 0
† Do. do. do. „ 1,72,020 0 0
Rs. 2,88,000 0 0

By order of the Directors,

BANK OF BENGAL,
Calcutta, the 7th August 1902.

E. J. BIRCH, Chief Accountant.
Rate for Demand Loans 3 per cent.
Percentage 48·14.

W. D. CRUICKSHANK,
Secretary and Treasurer.

(507—1)

NOTIFICATION.

In the Court of the Subordinate Judge of Monghyr.

MONEY EXECUTION CASE No. 347 OF 1902.

Sant Pershad Singh, decree-holder, *versus* Jugdeep Narain Singh, judgment-debtor.

TO be sold in the above case by the Nazir of this Court at 12 o'clock on the 25th August 1902, the right, title and interest of the judgment debtor in the following properties :—

Serial No.	Description of properties.	Tauzi No.	Jama sadar.	Approximate value stated by the decree-holder.
			Rs. A.	Rs.
1	Two annas 3 gundas 1 couri 3 dants out of 16 annas, being the right, title, and interest of the judgment-debtor in taluka Ishripur, *asli* and *dakhli*, pargana Bhoosari in Monghyr district.	1078	3,503 6	1,000

TARA PRASANO BANERJEE, Subordinate Judge.

Monghyr, the 7th August 1902.

(530—1)

Statement of Securities in Custody of the Bank of Bengal, Calcutta, on account of 1 per cent., 2 per cent. Sinking Funds and Plague Loan Reserve Fund.

	One per cent. Sinking Fund.	Two per cent. Sinking Fund.	Plague Loan Reserve Fund.
GOVERNMENT STOCK, *viz.*—	Rs.	Rs.	Rs
3½ per cent. Loan of 1842-43	4,51,900	57,200	1,500
3½ ,, ,, 1854-55	2,15,000	25,200	3,400
3½ ,, ,, 1865	3,84,500	42,800	1,400
3½ ,, ,, 1879	26,300	1,600	1,000
3½ ,, ,, 1900-1901	20,500	3,000	
3 ,, ,, 1896-97	48,500	7,000	
SHARES.			
6 p. c. Calcutta Municipal Debentures of 1878J.J. ...	5,500	500	
5 ,, ,, ,, ,, 1878J.D. ...	17,300	500	
5 ,, ,, ,, ,, 1879 ...	69,000	1,000	
5 ,, ,, ,, ,, 1880 ...	8,500	500	
5 ,, ,, ,, ,, 1884-85 ...	11,000	5,200	
5 ,, ,, ,, ,, 1885-86 ...	1,48,000	14,000	
5 ,, ,, ,, ,, 1886-87 ...	1,72,800	29,300	
5 ,, ,, ,, ,, 1887-88 ...	2,46,500	6,000	
5 ,, ,, ,, ,, 1889-90 ...	2,47,500	2,000	
5 ,, ,, ,, ,, 1890-91 ...	39,500	16,500	
4½ ,, ,, ,, ,, 1882-83A.O.	6,000	6,500	
4½ ,, ,, ,, ,, 1882-83J.J.	22,000		
4½ ,, ,, ,, ,, 1883-84 ...	5,300		
4½ ,, ,, ,, ,, 1891-92 ...	81,000	20,000	
4½ ,, ,, ,, ,, 1898 99 ...	2,000		
4 ,, ,, ,, ,, 1895-96 ...	2,16,500	19,000	30,000
4 ,, ,, ,, ,, 1897-98 ...	1,02,500	28,000	3,500
4 ,, ,, ,, ,, 1899-1900 ...	88,000	11,000	
4 ,, ,, ,, ,, 1900-01 ...	12,000		
4 ,, ,, ,, ,, 1901-02J.J.	1,10,500	7,400	
4 ,, ,, ,, ,, 1901-02M.S.	67,500	7,500	
4½ ,, ,, ,, ,, 1898-99M.A.	2,52,500	24,500	33,000
3½ ,, ,, ,, ,, 1896-97 ...	26,500	2,000	
Total ...	31,34,600	3,38,200	73,800

Statement showing the account of Reserve Fund of the Corporation of Calcutta for the year 1901-1902.

Reserve Fund.	Amount invested during 1901-1902.	Date of last investment previous to 1st April 1901.	Aggregate amount of securities in the hands of the Trustees.	Aggregate amount paid off in respect of Calcutta Municipal Debentures up to 31st March 1901.
	Rs.		Rs.	Rs.
1 per cent. Sinking Fund ...	3,76,900	16th Jan. 1901	31,34,600	Nil.
2 ,, ,, ,, ...	42,700	16th ,, ,,	3,38,200	54,99,600
Plague Loan Reserve Fund ...	3,200	5th Dec. 1900	73,800	Nil.

E. W. COLLIN,
Offg. Secy. to the Govt. of Bengal,
Financial Department.

W. H. MICHAEL,
Accountant-General, Bengal.

CALCUTTA,
The 11th August 1902.

(535—1)

Pure Sulphate of Quinine.

MANUFACTURED AT THE BENGAL GOVERNMENT CINCHONA PLANTATION.

FROM 1st April 1902 the price of this quinine will be as follows:—

1 Pound tin Rs. 17, or, post free, Rs. 17 8
½ " " " 8-8 " " " " 8-14.
¼ " " " 4-4 " " " " 4-10

Analysis shows this quinine to be of the purest manufacture; and it is guaranteed to be free from wilful mixture with the inferior alkaloids, cinchonine and cinchonidine. It is for sale only to Government officers, and only for cash, and may be had from the Superintendent, Botanic Garden, Sibpur, near Calcutta.

Cinchona Febrifuge.

Cinchona Febrifuge can be purchased by all Government officers and by any one taking *six pounds* and upwards at a time from the Superintendent, Botanic Garden, Calcutta, for cash only at the following rates—

	Government officers.	General public.	Postage extra.
	Rs. A.	Rs.	As.
1 Pound tin ...	10 0	12	8
½ " " ...	5 0	6	6
¼ " " ...	2 8	3	4

HARI CHARAN BOSE, M.A., B.L., intends to be enrolled as a Vakil of the High Court, Calcutta.

(376—4—939)

BABU NARENDRA LAL DEY, M.A., B.L., intends to enrol as a Vakil of the High Court, Calcutta.

(431—4—980)

MADHAVA CHANDRA CHATTERJEE, Government Pleader of Dinajpur, intends to be enrolled as a Vakeel of the High Court.

(457—4—997)

Wanted

A SUB-OVERSEER for the District Board of Bogra on a salary of Rs. 40 and a horse allowance of Rs. 15 per month. Applications will be received up to 15th August 1902. None need apply who is not qualified under the rules.

R. KRISHNA, Chairman

Bogra, the 28th July 1902. (488—2)

Notice.

WANTED an Assistant Estimator on Rs. 25 a month with neat handwriting with prospect of being made permanent. Applications with copies of testimonials will be received by the undersigned up to 17th August 1902.

BINOY KRISHNA MODUK, B.E.,
for District Engineer, Burdwan.

Burdwan, the 2nd August 1902. (498—2)

Notice.

WANTED for the Patna Municipality a Sub-Inspector of Schools on a monthly salary of Rs. 60 with fixed travelling allowance of Rs. 15.

Applicants must be qualified under Government Notifications Nos. 486T—G., 105T—G and 6 S, dated the 2nd September 1893, 24th May 1899 and 8th February 1901, respectively.

Preference will be given to a Muhammadan graduate well up both in Hindi and Urdu.

Applications with copies of requisite certificates will be received by the Inspector of Schools up to 22nd August 1902.

HARI DAS BANERJEA, Assistant Inspector of Schools, Patna Division, in charge of the office of the Inspector of Schools, Patna Division. (533—1)

Notice.

IN continuation of this Office Notice dated 27th June 1902, published in the *Calcutta Gazette* of the 9th July 1902, Part II, page 871, it is hereby notified for general information, under section 33 of Act IV (B.C.) of 1887, that a charge of Rs 20 a day will be levied as extra jetty hire on all Charter-party holidays in addition to the usual jetty hire, viz. Rs. 35, charged on ordinary days.

R. S. GREENSHIELDS,
Chairman of the Port Commissioners.

Chittagong, the 22nd July 1902. (444—3)

Notice.

NOTICE is hereby given to all creditors of the late Babu Gopaul Lall Seal, of No. 60 Colootollah Street, in the Town of Calcutta, that I have filed a suit on behalf of Sreemutty Kadumbini Dassee, mother and one of the creditors of the said Gopaul Lall Seal, praying for administration by the High Court of the Estate of the said Gopaul Lall Seal. The suit is No. 486 of 1902, Original Side, High Court. A number of creditors are joined as defendants. Those whose names are not included should communicate with the undersigned with a view to have their names included as defendants or notice being served on them under section 30 of the Civil Procedure Code.

N. C. BOSE, Attorney-at-Law.

3 Hastings Street, the 18th July 1902. (413—2—999)

Notice.

SEALED TENDERS for the conveyance of import, export and other Government stores, and for labour and the hire of boats for two periods—one of 1 year 8 months, from 1st January 1903 to 31st March 1904, and one for 3 years 3 months, from 1st January 1903 to 31st March 1906—will be received by the Agent for Government Consignments, Calcutta, up to noon on Friday, the 3rd October 1902.

Tenders should be superscribed "Tender for carrying contract for one year and three months" and "three years and three months," as the case may be.

Tenders must be prepared on forms to be obtained with full particulars from the undersigned on payment of one rupee for each form.

No tender will be received except on the prescribed form, and no additions or alterations must be made on the tender form

Tenders must be supported by a Bank of Bengal or Treasury receipt for Rs. 700 as earnest-money. The earnest-money to be forfeited in the event of a tender withdrawn No tender will be received without a deposit of this earnest-money.

Tenders will be opened at noon on Friday, October 3rd, 1902, at No. 5 Strand Road, in the presence of tenderers by the undersigned, who does not bind himself to accept the lowest or any tender.

H. J. PATERSON, LIEUT., R.N.R.,
Offg. Agent for Govt. Consignments.

Calcutta, the 25th July 1902.

Bengal Uncovenanted Service Family Pension Fund.

ABSTRACT STATEMENT showing the result of votes on the question submitted in Circular No. 4 of 1902:—

For the retention in office of the five Directors, Messrs. H. W. Stevens, C. A. Tweeddale, E. H. Lloyd, Rivers Howe and H. A. Twidale... 580 votes.
For the removal from the direction of the above five Directors ... 411 "

By order of the Board of Directors,

G. E. WARDE,
Secretary.

The 5th August 1902. (504—3)

Currency Notes.

THE following Currency Note of the Calcutta Circle is stated to have been destroyed, and payment of its value has been claimed by the person whose name is placed against the number. Any other person claiming a right to it is warned to communicate at once with the undersigned :—

Note wholly destroyed.

Register No.	No. of Note.	Value. Rs	Name of claimant.
H678 of 1901-1902	L/25 61213	50	Abinash Chandra Poddar, care of Brojo Nath De, 25, Bonomali Sarkar's Street, Kumartuli, Calcutta.

F. C. BREWIN, Assistant Comptroller-General, in charge, Paper Currency.

Paper Currency Department, the 5th August 1902.

Supply and Transport Notice No. 4.

Dated 31st July 1902.

THE Storekeeper-General, Supply and Transport Balooghat, Calcutta, will receive offers by letters up to 12 noon on the 20th August 1902 for supply of 14,760 lbs. Dubbing and 1,560 lbs Soft Soap during 1902-1903 in the Bengal Command, deliverable in four quarterly instalments, at his Store Depôt or any Headquarter station of a Chief Supply and Transport Officer and subject to his approval and according to the samples of this Corps.

2. The successful Tenderer will have to sign a sample agreement in $\frac{\text{S and T Form}}{\text{F. 45}}$, which form and any further particulars can be obtained on application to the above Officer.

For Sale.

THE "Zoonzoonia Bhuttal" Tea Garden belonging to the estate of the late Karamali Meah, now under the management of the Court of Wards, Chittagong, will be sold to the highest bidder by the undersigned on the 8th September 1902, under the orders of the Board of Revenue, conveyed in their letter No. 91W., dated 9th July 1902. Persons intending to purchase the garden are invited to appear in the Chittagong Collectorate on the appointed day and bid for the same. The garden is conveniently situated on the fifth mile of the public road from Chittagong to Hathazari Its acreage is 125 acres, of which 25 acres are now under plantation. Further particulars about the garden may be obtained on reference to the General Manager, Court of Wards, Chittagong.

2. The sale will be postponed in case adequate bid is not obtained. One-fourth of the amount bid will have to be deposited immediately after the bid is accepted as earnest-money, and the remainder will have to be paid up within 30 days from the date of sale. On failure to comply with this condition, the earnest-money deposited will be forfeited.

P. E. CAMMIADE, Collector.

Chittagong, the 8th August 1902. (509—2)

Lost

THE Government Promissory Notes— Rs.
No. 096820, 3½ per cent. loan of 1865 ... 5 0
„ 096821, ditto of 1865 ... 500
„ 096817, ditto of 1865 ... 500
„ 096531, ditto of 1865 ... 100

originally standing in the name of the Bank of Bengal, and last endorsed to Surendra Nath Ganguly, the proprietor, by whom they were never endorsed to any other person. Payment of the above Notes and the interest thereupon have been stopped at the Public Debt Office, Bank of Bengal, and application is to be made for accrued interest and for the issue of duplicates in favour of the proprietor after two years from the date of last advertisement.

Name of the Proprietress—RAJABALA DEBI.
Residence—Jansi. (499—3—1001)

Lost Receipt.

A RECEIPT numbered 13304, dated 29th July 1902, and granted by Public Debt Office, Bank of Bengal, on submission of the undermentioned Government Promissory Notes. Notice of loss has been given to the Public Debt Office, Bank of Bengal, and the undersigned is about to apply for surrender of the securities :—

G. P. Note No.	Loan.	Amount. Rs.	Holder's name.
045382	3½ of 1842-43 ...	4,000	Brajeswari Dasi and others.
005983	Ditto ...	1,000	

Name of Proprietress—BRAJESWARI DASI and others.
Residence—Babugunge, Hooghly. (506—1—1006)

Destroyed by white-ants

THE Government Promissory Note No. 016104 of the 3½ per cent. of 1842-43 for Rs. 100, originally standing in the name of Prosad Dass Bural and last endorsed to Srimutty Modon Mohini Dassee, the proprietress, by whom it was never endorsed to any other person. Payment of the above note and the interest thereupon have been stopped at the Public Debt Office, Bank of Bengal, and application is about to be made for the issue of duplicate in favour of the said proprietress.

GANES CHANDRA DE, Attorney for Sm. MOONE MOHINI DASSEE.

Calcutta, 1st August 1902. (493—3—1005)

Stolen

THE Government Promissory Notes— Rs.
No. 100601, 3½ per cent. of 1865 ... 1,000
„ 100602, ditto of „ ... 1,000
„ 100603, ditto of „ ... 1,000
„ 100605, ditto of „ . 1,000
„ 100606, ditto of „ ... 1,000
„ 064315, ditto of 1842-43 ... 5,000
„ 064316, ditto of „ ... 5,000
„ 010181, ditto of 1879 ... 10,000

originally standing in the name of the Bank of Bengal and last endorsed to Gowhar Ali, the proprietor, by whom they were never endorsed to any other person. Payment of the above Notes and the interest thereupon have been stopped at the Public Debt Office, Bank of Bengal, and application is to be made for accrued interest and for the issue of duplicates in favour of the proprietor after two years from the date of last advertisement.

Names of the Proprietors—Laddun Saheba and minors Anwar Ali *alias* Peary Mirza and Yakoob Ali *alias* Chottey Mirza, represented by their mother and certificated guardian, Laddun Saheba, and the minor Badronnessa Bibee, represented by her husband and certificated guardian, Shaik Doman.

Residence—Garden Reach, Paharpoor Road.

(454—3—485)

The Commissioners for the Port of Calcutta.

NOTIFICATION.

THE following revised scale of charge framed by the Commissioners for the Port of Calcutta under section 105, Act III (B.C.) of 1890, and approved by the Local Government in letter No. 1472 Marine, dated 8th August 1902, is published for general information under the provisions of section 107, Act III (B.C.) of 1890 :—

No.	Description.	Wharfage at the Jetties and Docks.
		As.
337	Tea, in chests, each	1

By order of the Commissioners,
R. A. DONNITHORNE, Secretary.

Port Commissioners' Office, Calcutta, the 11th August 1902. (534—1)

ESTATE WILLIAMROBERTSON.

Notice.

A CERTIFICATE under section 36 of Act II of 1874 to the estate of William Robertson, late of No. 32, Taltollah Lane, Calcutta, Engineer and Millwright, who died at the Loong Soong Tea estate, Assam, on or about the 20th day of March 1902 intestate, has been granted to Charles Windham Foley, Esq., of Messrs. Morgan & Co, Attorneys-at-Law, Calcutta, as the constituted attorney for the three children of the deceased to enable him to administer the estate. All persons being indebted to or having claims against the estate should communicate with the said Charles Windham Foley.

HENRY T. HYDE,

Administrator-General, Bengal.

7, Council House Street, Calcutta, 12th August 1902.

(536—1)

In the Court of Babu Sri Gopal Chatterji, Ray Bahadur, Subordinate Judge of Purnea.

TITLE EXECUTION CASE No. 148 OF 1902.

Babu Surendro Narain Singh of Murshidabad, decree-holder, *versus* Babu Chutherputti Singh and another, judgment-debtors.

TO be sold in the above case by the Nazir of the District Judge's Court, at 12 A.M., 1st September 1902, for realization of the judgment-debt (Rs. 17,534-0-2) the right, title, and interest of the judgment-debtors in the following properties:—

1. Eight annas' share out of 16 annas, appertaining to tauzi No. 1175 of the Purnea Collectorate, pargana Katihar, in the jurisdiction and thana of Sadar Purnea, the revenue of which, *i.e.*, of 16 annas, is Rs. 5,456-0-3, valued at about Rs. 10,000. Let it be known that the name of Mussamat Bibi Phulkumari is registered in the said mahal.

2. Eight annas' share out of 16 annas, appertaining to the tauzi No. 1176 of the Purnea Collectorate, mahal Kumaripur, pargana Kumaripur, under the jurisdiction of thana Kudwa, sub-registry and district registry, district Purnea, the revenue of which payable to the Collectorate is Rs. 2,741-1-0½ for the 16 annas' share, valued at Rs. 6,000. Let it be known that the name of Bibi Phulkumari is registered in the said mahal.

3. The proprietary patni right of the 16 annas of lot Saifganj, pargana Havelli, in the jurisdiction of thana Raniganj and Mateari, the annual jama of which is Rs. 10,901, payable to the zamindari katchary of Babu Rai Dhunputh Singh, and is at present payable to Mossamat Bhagwanbuthi Chaudhrain of mahulla Nazurganj, City Purnea, within which the mauzas Saifganj, Parwahar, Bhag Hisu Ghusna, Raghunathpur, Haripur, Mateari, Sihipur, Thila Mohun, and Palasi, &c., with its appurtenances, the right of the judgment-debtors, sub-registry Arrarea Basantpur, district registry Purnea, valued at Rs. 6,000.

4. Property belonging to the judgment-debtors in mahal Patni Mirzapur Pokhria, pargana Havelli, 16 annas' share, with its appurtenances, the right of the judgment-debtors, in the jurisdiction of thana Arrarea and Mateari, sub-registry Arrarea Basantpur, district registry Purnea, the annual jama of which is Rs. 14,306, payable to the zamindari katchary of Babu Rai Dhunputh Singh Bahadur, zamindar, and is now payable to the zamindari katchary of Mossamat Bibi Bhagwanbuthi Chaudhrain, of Mahulla Nazurganj, City Purnea, valued at Rs. 75,000.

SRI GOPAL CHATTERJI, Subordinate Judge.

Purnea, the 7th August 1902. (531—1)

NOTICE.

In the Subordinate Judge's Second Court, Midnapore.

TITLE EXECUTION CASE No. 64 OF 1902.

Behary Lall Sen, of No. 18 Babu Ram Ghose's Lane, Ahiritola, Calcutta, decree-holder, *versus* (1) Noni Gopal Mookerji, (2) Bhudeb Mookerji, of Sultangacha, pargana Pannan, zilla Hooghly, judgment-debtors.

TO be sold in the above case by the Nazir of the District Judge's Court, Midnapore, at 12 A.M., on the 15th September 1902, the properties detailed below for realization of the judgment-debt, amounting to Rs. 9,873-3:—

Schedule of properties.

Lot No. 1.—The judgment-debtors' proprietory interest, including their all other rights and interest to the extent of 4 annas of the estate of Tamluk, bearing present tauzi No. 2639, old tauzi No. 1469A, Register No. 2865, in pargana Tamluk, within the thana of Tamluk, Bhagabanpur, Machlandpur, Contai and sub-registry of Tamluk, Kajlagarh, Machlandpur and Contai. The above estate with the Jalpaichuck. The entire sadar jama is Rs. 1,21,578-1-5 only. Half of the estate belongs to the Raja of Mohisadal. The other half forms a separate account No. 1, and half of the latter, or in other words 4 annas of the entire estate, belongs to the debtor. The sadar jama of the share sought to be attached is Rs. 30,394 8-9-2 only. The kachari house of the Tamluk dihi and all other rights and interest possessed and enjoyed by the debtors are also sought to be attached.

Price Rs. 8,000.

Lot No. 2.—The proprietory interest of the judgment debtors, including their all other rights to the extent of 8 annas of the estate of Jhakra, in pargana of Chandrakona, within the thana of Chandrakona and sub registry of Jarea, bearing present tauzi No. 475, old tauzi No. 713A, Register No. 1575. The entire taskis is Rs. 10,650-5-6 only. The sadar jama of the 8 annas share sought to be sold is Rs. 5,325 7-9 only. The above 8 annas share with all other rights possessed and enjoyed by the debtors are sought to be sold.

Price Rs. 2,000.

MAHIM CHANDRA GHOSH, Subordinate Judge.

Midnapore, the 28th July 1902. (485—1)

In the Court of the Subordinate Judge 2nd Court, Muzaffarpur.

EXECUTION CASE No. 136 OF 1902.

J. M. Wilson, decree-holder, *versus* J. M. Falkner, judgment-debtor.

TO be sold in the above case by the Nazir of the District Judge's Court at Muzaffarpur on the 15th September 1902 the undermentioned properties of the judgment-debtor:—

1. Right, title and interest of the judgment debtor in respect of the Indigo Factory Sendwari Basdeo *alias* Chapta, pargana Hajipur, as per boundary settlement made between the decree-holder and the judgment-debtor under an agreement dated the 6th February 1901, with all rights relating to moveable and immoveable properties, together with engines and other machines including sugar mill, etc, existing in and appertaining, to the factory and villages of the said factory, with dues of every sort, and right, title and interest of every nature which the judgment-debtor has acquired under the terms and statements contained in the said agreement, in respect of and in connection with the Indigo Factory at Dharumpur Jangle *alias* Sarsai and the Indigo Factory Sendwari Basdeo *alias* Chapta and the villages of both the factories, in the district of Muzaffarpur, pargana Hajipur and Chakla Garjaul, pargana Bisara.

Approximate value Rs. 2,000.

GOBINDA CHANDRA BASAK, Subordinate Judge.

Muzaffarpur, the 6th August 1902. (511—1)

NOTICE.

In the Court of the Munsif at Balasore

EXECUTION CASE No. 602 OF 1902.

Udoy Nath Kar, decree-holder, *versus* Baikuntha Nath Kar, judgment-debtor.

TO be sold by the Nazir of the Munsif's Court at Balasore in the Court premises at 12 o'clock on the 15th September 1902 for realisation of Rs. 957-3-9—

Two annas two pies share belonging to the judgment-debtor in estate Tapo Chhama, pargana Satmolong, bearing tauzi No. 809 of the Balasore Collectorate, station Basta.

Government revenue payable for the entire tauzi is Rs. 630, and that payable for the above share is Rs. 72-12-8.

ASUTOSH SARKAR, Munsif.

Balasore, the 5th August 1902. (505—1)

NOTICE.

In the Court of the Subordinate Judge of Murshidabad.

EXECUTION CASE No. 60 OF 1902 (TITLE).

Rai Setap Chand Nahar Bahadur, decree-holder, *versus* Bindu Bassini Chaudhurani, judgment-debtor.

THE right, title, and interest of the following mortgaged properties of the judgment-debtor will be sold by the Nazir of the District Judge of Murshidabad at Berhampur, on the 15th August 1902, at 1 P.M., for realisation of Rs. 1,791-9-6 : —

Three annas ten gandas' share of mauzah Jayrampur *alias* Panch Beria and mauzah Chaitanapur, situated within the jurisdiction of thana Gorabazar, registration sub-district of Berhampur, of kismut Saidabad, and kismut taluk Parushattambati, within the jurisdiction of thana Soojagunge, of kismut jote Shujal, within the jurisdiction of thana Ashanpur, registration sub-district Baluchur, of kismut Nashipur, of mauzahs Nashipur and Mohimapur and Kat Pukharia within the jurisdiction of thana Shahanagore, of taraf Nandaipur, mauzah Birampur and of kismut Sreerampur *alias* Jamalmati and mauzah jote Fateh and kismut jote Fatehpur and Guzarghat in mahal Shibpur, in taraf Singha Mahal, within the jurisdiction of thana Dewan Sarai, registration sub-district Jangipur in khas tahsil of the judgment-debtor, of mauzah Gauripur in taraf Gauripur, mauzah Harishpur, mauzah Bhairabpur, mauzah Singha in taraf Singha, mauzah Jahardipara, mauzah Newton Singha *alias* Shibpur, including Shingor Beel, and all the mauzahs Mudafat within the jurisdiction of thana Dowlatabad, sub-registry Berhampur, which are in *patni* settlement with Gokul Chandra Mandul of Palashdunga, of taraf Mohulla, mauzah Mohulla Modhuhalder, mauzah Rajapur and Ganti Trilochun, mauzah Hat Nagore *alias* Shujapur, taraf Dahakula and kismut Ratnagavohati, within the jurisdiction of thana Baruah, of taraf Moukara and taraf Nawanpur, including the jalkar of Bhagirathi, of Pakamati and Mat Ganguly Dangapara, mauzah Mudafat, of mauzah Mohulla, within the jurisdiction of thana Gokurna, which is in *patni* settlement with Messrs. Louis Payen & Co. of Berhampur, of kismut Kayah Sat Koonda, in thana Gorabazar, which is in *patni* settlement with Tripura Charan Bhatta and others, of Cossimbazar *alias* Cossimnagore, in thana Soojagunge, which is in *patni* settlement with Hari Prosad Maitra of Saidabad, and of kismut Sadpur *alias* Nasipur, within the jurisdiction of thana Harihar para and sub-registry Islampur, which is held as *shikmi* taluk under the judgment-debtor by Krisna Prosad Roy and others of Harihurpara ; the revenue payable in seven annas' share of the same being Rs. 668-6-10.

JADU NATH GHOSH, Sub-Judge.

Berhampur, the 8th August 1902. (510—1

INSOLVENT NOTICES.

In the Court for the Relief of Insolvent Debtors at Calcutta.

In the matter of RAJENDRA COOMAR BOSE, an insolvent.

On Tuesday, the 15th day of July last, it was ordered that the matters of the petition of the said insolvent be heard on Tuesday, the 2nd day of September next, and that the said insolvent do then attend to be examined before the said Court.

K. M. Rakshit, Attorney. (513—2)

In the matter of KUNJA BEHARY CHUNDER, an insolvent.

On Tuesday, the 15th day of July last, it was ordered that the matters of the petition of the said insolvent be heard on Tuesday, the 2nd day of September next, and that the said insolvent do then attend to be examined before the said Court.

Raj Kissore Bysack, Attorney. (514—2)

In the matter of DWARKA DASS AJMIRAH, an insolvent.

On Monday, the 14th day of July last, it was ordered that the matters of the petition of the said insolvent be heard on Tuesday, the 2nd day of September next, and that the said insolvent do then attend to be examined before the said Court.

Fox and Mandal, Attorneys. (515—2)

In the matter of CHOONI LALL, an insolvent.

On Monday, the 14th day of July last, it was ordered that the matters of the petition of the said insolvent be heard on Tuesday, the 2nd day of September next, and that the said insolvent do then attend to be examined before the said Court.

Charu Chunder Bose, Attorney. (516—2)

In the matter of KHODABUX MULLICK and SULEIMAN MULLICK, insolvents.

On Saturday, the 12th day of July last, it was ordered that this matter be heard on Tuesday, the 2nd day of September next, and that the said insolvents do then attend to be examined before the said Court.

Fox and Mandal, Attorneys. (517—2)

In the matter of GUNPUT ROY and RADHA KISSEN, insolvents.

On Wednesday, the 25th day of June last, in was ordered that Tuesday, the 2nd day of September next, be appointed for the further hearing of this matter, and that unless cause be shewn to the contrary on that day, the said insolvents be discharged personally as well as to their after-acquired property from all liabilities for debts, claims and demands of and against the said insolvants at the time of the filing of their petition for relief.

T. H. Wilson & Co., Attorneys. (518—2)

In the matter of PASUMARTI JOGAPPA, an insolvent.

On Tuesday, the 1st day of July last, it was ordered that this matter be set down on Tuesday, the 2nd day of September next, for hearing for proof of claims of the creditors of the said insolvent. And it was further ordered that the said creditors do, on or before the 21st day of August next, file in the Office of the Chief Clerk of this Court their respective claims duly verified by their respective affidavits against the estate of the said insolvent. And it was further ordered that Tuesday, the said 2nd day of September next, be appointed for the further hearing of this matter, and that the said insolvent do then attend to be examined before the said Court.

Wilson, Chatterjee, and Mitra, Attorneys. (519—1)

In the matter of DWARKA DASS AJMIRAH, residing at No. 11 Pugyaputty in Burrabazar, in the town of Calcutta, carrying on business as a broker in silver, and formerly carrying on business as a broker and dealer in silver at Bombay, under the style and firm of Dwarka Dass Ajmirah, an insolvent.

Notice that the petition of the said insolvent seeking the benefit of the Act XI Vic., Chapter XXI, was filed in the Office of the Chief Clerk on Monday, the 14th day of July last, and by an order of the same date the estate

and effects of the said insolvent were vested in the Official Assignee.

Fox and Mandal, Attorneys. (520—1)

In the matter of RAJENDRA COOMAR BOSE, residing at No. 29-2 Hoozooree Mull's Lane, in the town of Calcutta, at present having no occupation, an insolvent.

Notice that the petition of the said insolvent seeking the benefit of the Act XI Vic., Chapter XXI, was filed in the Office of the Chief Clerk on Tuesday, the 15th day of July last, and by an order of the same date the estate and effects of the said insolvent were vested in the Official Assignee.

K. M. Rakshit, Attorney. (521—1)

In the matter of KUNJA BEHARY CHUNDER, residing at No. 20 Haladhar Burdhan's Lane, in the town of Calcutta, lately carrying on business at No. 148 Old China Bazar Street in Calcutta in hosiery goods under the name and style of Kunja Behary Chunder, an insolvent

Notice that the petition of the said insolvent seeking the benefit of the Act XI Vic., Chapter XXI, was filed in the Office of the Chief Clerk on Tuesday, the 15th day of July last, and by an order of the same date the estate and effects of the said insolvent were vested in the Official Assignee.

Raj Kissore Bysack, Attorney. (522—1)

In the matter of CHOONI LALL, late of No. 4 Dayahata Street, in the town of Calcutta, formerly carrying on cloth businesses in co-partnership with Hazareemull Mohun Chund and Tara Chund at Gonesh Bhukut Katra, Calcutta, under the name and style of Hazareemull Mohun Chand and lately a broker of clothes, and at present a prisoner in the Civil side of the Presidency Jail, an insolvent.

Notice that the petition of the said insolvent seeking the benefit of the Act XI Vic, Chapter XXI, was filed in the Office of the Chief Clerk on Monday, the 14th day of July last, and by an order of the same date the estate and effects of the said insolvent were vested in the Official Assignee.

Charu Chunder Bose, Attorney. (523—1)

In the matter of SOOKDEO DASS and MUTHRA DASS, who lately carried on business together in copartnership at No. 111-2, Cross Street, in the town of Calcutta, as cloth merchants under the name, style, and firm of Lall Chand Sookdeo Dass, insolvents.

On Monday, the 26th day of May last, it was ordered that the creditors of the said insolvents do on or before the 25th day of November next file in the office of the Chief Clerk of this Court statements of the amounts of their respective claims against the estate of the said insolvents, duly verified by their affidavits, and that thereupon the said Chief Clerk do frame a schedule from the claims so to be filed.

E. O. Moses, Attorney. (524—1)

In the matter of MATHURA PERSAUD SUREKA, an insolvent.

On Friday, the 11th day of July last, it was ordered that the Official Assignee of this Court and the assignee of the estate and effects of the said insolvent do out of the assets now in his hands belonging to the estate of the said insolvent in the first place pay himself his own commission upon the estate assets vested in him as such Official Assignee and all costs, charges, and expenses lawfully due to him, and in the next place that he do retain such sum as in his opinion will be sufficient to cover the costs incurred on his behalf and also on behalf of the said insolvent in this matter, including the costs of, and incidental to, this application, and also that he do retain in his hands, subject to the further order of this Court, a sum sufficient to cover the full amounts of the claims of such of the creditors mentioned in the schedule of the said insolvent as have not signed the Deed of Composition, and that he do retain a sum in his opinion sufficient to cover his own and the creditors' costs of, and incidental to, the proof of these outstanding claims. And it was further ordered that the petition filed in this matter on the 17th day of February last seeking for relief under the provisions of the said Act be and the same is hereby withdrawn, and that the vesting order made thereon be and the same is hereby discharged, provided always that all acts or things done by the said Official Assignee or other person or persons acting under his authority prior to this order shall be good and valid, and shall not be annulled or in any wise affected thereby. And it was further ordered that after paying and retaining such sums as aforesaid on account of commission, charges, expenses, and costs as aforesaid, and for such creditors as aforesaid, the said Official Assignee do further deliver over to Jogilall Sunghania and Anuntram Sèrowgy, the trustees named in the Deed of Composition, upon their receipt the balance of any cash, if any, remaining in his hands, together with all other estate and effects (including all immoveable properties) and all books, papers, and documents belonging to the estate of the said insolvent. And it was further ordered that the said Official Assignee do out of the money retained by him on account of such costs as aforesaid pay to Mr. A. Hinds, Attorney for the said Official Assignee, and to Messieurs Leslie and Hinds, Attorneys for the said insolvent, their respective costs incurred in this matter, including the costs of, and incidental to, this application when taxed by the Taxing Officer of this Court, and if there be any balance remaining in his hands after payment of such taxed costs that he do pay such balance to the said trustees.

Leslie and Hinds, Attorneys.

A. Hinds, Attorney.

K. N. Mitter and Surbadhicary, Attorneys. (525—1)

In the matter of MURLIDHUR SUREKA, an insolvent.

On Friday, the 11th day of July last, it was ordered that the Official Assignee of this Court and the assignee of the estate and effects of the said insolvent do, out of the assets now in his hands belonging to the estate of the said insolvent, in the first place pay himself his own commission upon the estate assets vested in him as such Official Assignee and all costs, charges and expenses lawfully due to him, and in the next place that he do retain such sum as in his opinion will be sufficient to cover the costs incurred on his behalf and also on behalf of the said insolvent in this matter, including the costs of and incidental to this application and also that he do retain in his hands, subject to the further order of this Court, a sum sufficient to cover the full amounts of the claims of such of the creditors mentioned in the schedule of the said insolvent as have not signed the deed of composition, and that he do retain a sum in his opinion sufficient to cover his own and the creditors' costs of and incidental to the proof of these outstanding claims and the full amount of principal and interest due to Godhuram Ramjee Das, the creditors No. 61 of the said insolvent. And it was further ordered that the petition filed in this matter on the 17th day of February last seeking for relief under the provisions of the said Act be and the same is hereby withdrawn, and that the vesting order made thereon be and the same is hereby discharged; provided always that all acts or things done by the said Official Assignee or other person or persons acting under his authority prior to this order shall be good and valid and shall not be annulled or in any wise affected thereby; and it was further ordered that after paying and retaining such sum as aforesaid on account of commission charges, expenses and costs as aforesaid and for such creditors as aforesaid, the said Official Assignee do further deliver over to Jogilal Sunghania and Anuntram Serowgy, the Trustees named in the said deed of composition upon their receipt the balance of any cash, if any, remaining in his hands, together with all other estate and effects (including all immoveable properties) and all books, papers and documents belonging to the estate of the said insolvent. And it was further ordered that the said Official Assignee do, out of the monies retained by him on account of such costs as aforesaid, pay to Mr. A. Hinds, Attorney for the said Official Assignee, and to Messrs Leslie and Hinds, Attorneys for the said insolvent, their respective costs incurred in this matter, including the cost of and incidental to this application when taxed by the Taxing Officer of this Court, and if there be any balance remaining in his hands after payment of such taxed costs, that he do pay such balance to the said Jogilall Sunghania and Anuntram Serowgy, the Trustees named in the said deed of composition.

Leslie and Hinds, Attorneys.

A. Hinds, Attorney.

Manuel and Augurwallah, Attorneys. (526—1)

In the matter of LATCHMI NARAIN SUREKA, an insolvent.

On Friday, the 11th day of July last, it was ordered that the Official Assignee of this Court and the assignee of the estate and effects of the said insolvent do out of the assets now in his hands belonging to the estate of the said insolvent in the first place pay himself his own commission upon the estate assets vested in him as such Official Assignee, and all costs, charges, and expenses lawfully due to him, and in the next place that he do retain such sum as in his opinion will be sufficient to cover the costs incurred on his behalf and also on behalf of the said insolvent in this matter, including the costs of, and incidental to, this application, and also that he do retain in his hands, subject to the further order of this Court, a sum sufficient to cover the full amounts of the claims of such of the creditors mentioned in the schedule of the said insolvent as have not signed the said Deed of Composition, and that he do retain a sum in his opinion sufficient to cover his own and the creditors' costs of, and incidental to, the proof of these outstanding claims, and it was further ordered that the petition filed in this matter on the seventeenth day of February last seeking for relief under the provisions of the said Act be and the same is hereby withdrawn, and that the vesting order made thereon be and the same is hereby discharged, provided always that all acts or things done by the said Official Assignee or other person or persons acting under his authority prior to this order shall be good and valid, and shall not be annulled or in any wise affected thereby. And it was further ordered that after paying and retaining such sums as aforesaid on account of commission, charges, expenses, and costs as aforesaid, and for such creditors as aforesaid the said Official Assignee do further deliver over to Jogilall Sunghania and Anuntram Serowgy, the trustees named in the said Deed of Composition, upon their receipt the balance of any cash, if any, remaining in his hands, together with all other estate and effects (including all immoveable properties) and all books, papers, and documents belonging to the estate of the said insolvent. And it was further ordered that the said Official Assignee do out of the moneys retained by him on account of such costs as aforesaid pay to Mr. A. Hinds, Attorney for the said Official Assignee, and to Messrs. Leslie and Hinds, Attorneys for the said insolvent, their respective costs incurred in this matter, including the costs of, and incidental to, this application when taxed by the Taxing Officer of this Court, and if there be any balance remaining in his hands after payment of such taxed costs that he do pay such balance to the said Jogilall Sunghania and Anuntram Serowgy, the trustees named in the Deed of Composition.

Leslie and Hinds, Attorneys.
A. Hinds, Attorney. (527—1)

In the matter of DOORGA PERSAUD SUREKA, an insolvent.

On Friday, the 11th day of July last, it was ordered that the Official Assignee of this Court and the assignee of the estate and effects of the said insolvent do out of the assets now in his hands belonging to the estate of the said insolvent in the first place pay himself his own commission upon the estate assets vested in him as such Official Assignee, and all costs, charges, and expenses lawfully due to him, and in the next place that he do retain such sum as in his opinion will be sufficient to cover the costs incurred on his behalf and also on behalf of the said insolvent in this matter, including the costs of, and incidental to, this application, and also that he do retain in his hands, subject to the further order of this Court, a sum sufficient to cover the full amounts of the claims of such of the creditors mentioned in the schedule of the said insolvent as have not signed the Deed of Composition, and that he do retain a sum in his opinion sufficient to cover his own and the creditors' costs of, and incidental to, the proof of these outstanding claims and also the full amount of principal and interest due to Godhuram Ramjee Dass, creditor No. 67 of the said insolvent, and the amount due to John Grossmann, creditor No 95. And it was further ordered that the petition filed in this matter on the 17th day of February last, seeking for relief under the provisions of the said Act be and the same is hereby withdrawn, and that the vesting order made thereon be and the same is hereby discharged, provided always that all acts or things done by the said Official Assignee or other person or persons acting under his authority prior to this order shall be good and valid, and shall not be annulled or in any wise affected thereby. And it was further ordered that after paying and retaining such sums as aforesaid on account of commission, charges, expenses, and costs as aforesaid, and for such creditors as aforesaid, the said Official Assignee do deliver over to Jugilall Sunghania and Anuntram Serowgy, the trustees named in the said Deed of Composition, upon their receipt the balance of any cash, if any, remaining in his hands, together with all other estate and effects (including all immoveable properties) and all books, papers, and documents belonging to the estate of the said insolvent. And it was further ordered that the said Official Assignee do out of the money retained by him on account of such costs as aforesaid pay to Mr A. Hinds, Attorney for the said Official Assignee, and to Messrs. Leslie and Hinds, Attorneys for the said insolvent, their respective costs incurred in this matter, including the costs of, and incidental to, this application when taxed by the Taxing Officer of this Court, and if there be any balance remaining in his hands after payment of such taxed costs that he do pay such balance to the said Jugilall Sunghania and Anuntram Serowgy, the trustees named in the said Deed of Composition.

Leslie & Hinds, Attorneys.
A. Hinds, Attorney.
Manuel & Augurwallah, Attorneys.
O. Camell, Attorney. (528—1)

In the matter of RAM PERSAD SUREKA, NUNDRAM SUREKA, and THAKUR DAS SUREKA, insolvents.

On Friday, the 11th day of July last, it was ordered that the Official Assignee of this Court and the assignee of the estate and effects of the said insolvents do out of the assets now in his hands belonging to the estate of the said insolvents in the first place pay himself his own commission upon the estate assets vested in him as such Official Assignee, and all costs, charges, and expenses due to him, and in the next place that he do retain such sum as in his opinion will be sufficient to cover the costs incurred on his behalf and also on behalf of the said insolvents in this matter, including the costs of, and incidental to, this application, and also that he do retain in his hands, subject to the further order of this Court, a sum sufficient to cover the full amounts of the claims of such of the creditors mentioned in the said schedule of the said insolvents as have not signed the said Deed of Composition, and that he do retain a sum sufficient in his opinion to cover his own and the creditors' costs of, and incidental to, the proof of these outstanding claims and also the amount of principal and interest payable to the said creditors No. 59, and also the full amount of the claim of Messieurs L. King and Company, creditors No. 154 of the said insolvents. And it was further ordered that the petition filed in this matter on the seventeenth day of February last seeking for relief under the provisions of the said Act be and the same is hereby withdrawn, and that the vesting order made thereon be and the same is hereby discharged, provided always that all acts or things done by the said Official Assignee or other person or persons acting under his authority prior to this order shall be good and valid, and shall not be annulled or in any wise affected thereby. And it was further ordered that after paying and retaining such sums as aforesaid on account of commission, charges, expenses, and costs as aforesaid and for such creditors as aforesaid, the said Official Assignee do further deliver over to Jogilall Sunghania and Anuntram Serowgy, the trustees named in the said Deed of Composition, upon their receipt the balance of any cash, if any, remaining in his hands, together with all other estate and effects (including all immoveable properties) and all books, papers, and documents belonging to the estate of the said insolvents. And it was further ordered that the said Official Assignee do out of the money retained by him on account of such costs as aforesaid pay to Mr. A. Hinds, Attorney for the said Official Assignee, and to Messieurs Leslie and Hinds, Attorneys for the said insolvents, their respective costs incurred in this matter, including the costs of, and incidental to, this application, when taxed by the Taxing Officer of this Court, and if there be any balance remaining in his hands after payment of such taxed costs as aforesaid that he do pay such balance to the said trustees.

Leslie and Hinds, Attorneys.
A. Hinds, Attorney.
Manuel and Augurwalla, Attorneys.

Chief Clerk's Office, the 11th day of August 1902.
(529—1)

In the matter of Sreenath Koyal, an applicant for insolvency.

AN application has been made by the abovenamed petitioner, son of late Godadhor Koyal of Mathurapur, thana Mathurapur, district 24-Parganas, for being declared an insolvent, and that such application will be heard and disposed of by this Court on the 23rd August 1902 at the hour of 11 A.M. Any creditor of the said applicant desirous of opposing such application must appear before this Court at the time aforesaid.

KUMUD NATH BANERJEE, Munsif, Second Court, Diamond Harbour.

The 29th July 1902. (486—1—1007)

Insolvency Notice.

NOTICE is hereby given that the undermentioned dividend is lying unclaimed:—

Estate Charles Henry Emmett and another (Emmett and Chambers, insolvents.

Nos.	Names of Creditors.	Amount of claim.	3rd dividend at Rs. 5 per cent.
		Rs. A. P.	Rs. A. P.
14	Sarodapersaud Mookerjee ...	2,953 11 9	147 12 7
25	Pran Gobind Dey	6,700 13 0	335 8 8
26	N. Ram Dass Pantula & Co. ...	1 006 3 11	50 5 0
30	Colonial Insurance Company ...	1,430 3 0	71 8 2

A. B. MILLER, Official Assignee.

Calcutta, the 11th August 1902. (512—1)

CALCUTTA POST OFFICE NOTICE.

Mails for—	Date and hour of closing at the General Post Office, Calcutta.		Route by which despatched.
	1902.	P.M.	
United Kingdom, Aden, Egypt, Europe, America, West Africa *vid* United Kingdom and East Africa *vid* Aden (and also South Africa, if superscribed on the cover *vid* United Kingdom or Aden).	14th Aug.	At 6-30	Per P. & O. steamer from Bombay.
Parcels and money-orders for the United Kingdom and other Foreign places.	13th ,,	Parcels P.M. At 5 M.-O. P.M. At 4	Ditto ditto.
* Australasian Colonies ...	18th ,,	,, 7-30	*Vid* Tuticorin and Colombo.*
Straits Settlements (also China and Japan, if the steamer's name is superscribed on the cover).	15th ,,	,, 8-30	Per steamer *Lightning*.
Burma	14th ,,	,, 7-30	Per B. I. S. N. Co.'s steamer.
Burma, Penang and Singapore.	16th ,,	,, 7-30	Ditto ditto.
Akyab, Kyaukpyu and Sandoway.	16th ,,	,, 7-30	Ditto ditto.
Burma, Tavoy and Mergui ...	18th ,,	,, 7-30	Ditto ditto.
Mauritius, Réunion, Mayotte, and Nossi-Be.	20th ,,	,, 7-30	Per steamer *India* from Colombo.
South Africa (Letters) ... Ditto (Parcels for Natal and Cape Colony only).	13th ,,	,, 7-30 / ,, 5	Per steamer *Umlazi* from Colombo.
Port Blair	16th ,,	,, 7-30	*Vid* Madras.

* Although the date entered in column 2 is, as far as can be calculated, the latest safe date of posting for the next Mail steamer, full allowance being made for the steamer being in advance of her published timing, Mails for the places mentioned in column 1 are despatched daily to Colombo, so that they may proceed by any steamer that has been unusually accelerated or retarded, or by any special opportunity that may be afforded by a steamer not belonging to one of the regular lines.

† Correspondence for China and Japan is despatched daily to Colombo, so that they may proceed by the first steamer available.

1. The letter-box for Inland articles will be cleared for the forenoon Mails at the following hours:—

For Goalundo, Arakan and Chittagong, at 5-30 A.M.
For Midnapore and Orissa districts, at 8-30 A.M.

For the Eastern districts, as far as Dacca and Mymensingh, at 6-30 A.M.

For Khulna and Jessore districts, at 7-30 A.M.

For Bombay, Central Provinces and Midnapore, *vid* Bengal-Nagpur Railway, at 10-45 A.M., and with a late fee of ½ anna up to 11-35 A.M.

2. The letter-box will be cleared for the evening Mails at the following hours, viz.—

For the East Indian Railway Loop Mail, at 2-30 P.M., and with a late fee of ½ anna up to 2-55 P.M.

For the Northern Bengal, Darjeeling and Assam Mails, at 3-25 P.M., and with a late fee of ½ anna up to 3-50 P.M.

For the Bombay Mail, *vid* Jubbulpore, at 6 P.M., and with a late fee of ½ anna up to 6-30 P.M.

For the Punjab Mail, at 7-30 P.M.
For Midnapore, Orissa and Madras Presidency, at 7-30 P.M.
For the Khulna Mail, at 7-30 P.M.
For the Eastern Bengal Mail, at 7-30 P.M.
} and with a late fee of ½ anna up to 8 P.M. and with a late fee of 1 anna up to 8-45 P.M.

3. Late registered letters will be received between the following hours:—

For the Bombay Mail, *vid* Jubbulpore, from 5 P.M. to 6-15 P.M.

For the Punjab Mail, from 6 P.M. to 7 P.M.

For the Eastern Bengal Mail, from 6 P.M. to 7 P.M.

For the Khulna Mail, from 6 P.M. to 7 P.M.

For Midnapore, Orissa and the Madras Presidency, from 6 P.M. to 7 P.M.

NOTE.—The late fee on each registered letter will be 2 annas which must be prepaid in stamps on the letter.

4. Articles for Burma and for Port Blair by sea are received without late fee up to 7-30 P.M., and with a late fee of ½ anna up to 8 P.M.

5. On the latest safe day of despatch of Mails for the Australasian Colonies or any other Foreign Countries, *vid* Madras or Tuticorin, the letter box for Foreign articles will be cleared for the last time at 7-30 P.M., and late letters and papers fully prepaid will be received up to 8-45 P.M.

6. On the day of despatch of the Mail for Europe (Thursday), the letter-box for Foreign articles will be cleared for the last time, for articles, without the late fee, at 6-30 P.M., and late letters and papers fully prepaid will be received up to 6-45 P.M. Late registered articles will be received from 5 to 6 P.M On other days the letter-box for Foreign articles will be cleared for the last time, without the late fee, at 6 P.M., and late letters and papers will be received up to 6-30 P.M. for despatch by any Foreign Mails, *vid* Bombay, the same night and up to 8-30 P.M., late letters and papers up to 9 P.M., for any Foreign Mails despatched by sea. Foreign Mails for despatch *vid* Madras or Tuticorin are received up to 7-30 P.M., and with a late fee up to 8-45 P.M. The late fee for Foreign articles is 4 annas, which must be prepaid in stamps affixed to the articles.

JOHN OWENS,
Presidency Postmaster.

CALCUTTA G. P. O.,
The 12th August 1902.

Notice.

INSOLVENCY CASE No I OF 1902.

SYAMA CHARAN SURMA, son of late Pitamber Surma of Burirchar, thana Hathazari, has, on the 29th April 1902, been declared an insolvent.

E. GEAKE, District Judge.

Chittagong, District Judge's Office, the 6th August 1902. (532—1—1008)

Notice of Deaths sent to the Administrator-General of Bengal under section 64 of Act II of 1874.

Name of deceased.	Place of death.	Date of death.	By whom death reported, and when.	REMARKS
Mrs. Ann Baptist	Muraffarpur ..	18th May 1902 ...	District Judge, Tirhut, on 1st July 1902.	Will left. Mr. Tom Livingstone (?) Godby, sole legatee, has applied for letters of administration.
Mrs. Caroline Benjamin *alias* Ma Min Thu of Moulmein.	Moulmein ...	24th Dec. 1900 ...	District Judge, Amherst, on 1st July 1902.	Will left. Probate granted to Helen Higgins and John Benjamin, daughter and son of the deceased.
Mrs. Mary E. H. Goulds-bary.	Mussoorie ...	26th June 1902 ...	Sub-Judge, Mussoorie, on 15th July 1902.	No Will. No application.
Mr. F. Fisher, late Traffic Inspector, Bengal-Nagpur Railway.	Mayo Hospital, Nagpur.	24th Jan. ,, ...	Deputy Commissioner, Nagpur, on 19th July 1902.	No Will. Application for letters of administration has been made by Mrs. G. Savely (?)
Mr. Junis Dudley Cowen, late of No. 67, South Road, Entally.	Presidency General Hospital.	20th June ,, ...	District Judge of 24-Parganas, Alipore, on 27th June 1902.	Not known whether any Will left. No application.
Mrs. Elisabeth Boyd, late of No. 4, South Road, Entally.	Ditto ...	26th ,, ,, ...	District Judge of 24-Parganas, Alipore, on 2nd July 1902.	Ditto ditto.
Mr. C. J Campbell, late of No. 1, Cowie's Lane, Calcutta.	Ditto ...	9th ,, ,, ...	District Judge of 24-Parganas, Alipore, on 23rd June 1902.	Ditto ditto.
Mr. W. E. Carliar, late of No. 5, Scoterkin's Lane, Calcutta.	Ditto ...	12th ,, ,, ...	Ditto ditto ...	Ditto ditto.
Mr. John Healy, late a Guard, E. I. R., Asansole.	Ditto ...	18th ,, ,, ...	District Judge of 24-Parganas, Alipore, on 24th June 1902.	Ditto ditto.
Mr. W. Smith, late of S. S. *Lindesforne.*	Ditto .	12th ,, ,, ...	Ditto ditto ...	Ditto ditto.
Mrs. Agnes Bisdale, late of No. 10, Waris Bagan Lane, Calcutta.	Ditto ...	19th ,, ,, ...	Ditto ditto ...	Ditto ditto.
Mr. Samuel B. Lawrence, late of No. 8, Lindsay Street, Calcutta.	Ditto ...	1st July ,, .	District Judge of 24-Parganas, Alipore, on 10th July 1902.	Ditto ditto.
Mr. Charles Stuart Young, late Assistant Auditor, B. and N.-W. Railway Company.	At Sea	23rd Dec. 1901 ...	District Judge of Gorakhur, on 25th June 1902.	No Will. Mr. E. A. Neville, Acting Agent, B. and N.-W. Railway, has applied for letters of administration of the deceased's property in India, under a power-of-attorney from James Gordon Young, brother of the deceased.
Mr. Hamilton T. Brown	Mayo Hospital, Lahore.	14th Feb. 1902 ..	District Judge, Lahore, on 9th June 1902.	No. Will. No application.

Calcutta, the 11th August 1902. HENRY T. HYDE, Administrator-General of Bengal.

GOVERNMENT PUBLICATIONS FOR SALE

At the Bengal Secretariat Book Depôt, Writers' Buildings, Calcutta, and by the following Agents :—

AGENTS IN INDIA.

Messrs Thacker, Spink & Co., Calcutta and Simla.
Messrs. Newman & Co., Calcutta.
Messrs Higginbotham & Co., Madras.
Messrs. Thacker & Co., Ld., Bombay.
Messrs. A. J. Combridge & Co., Bombay.
Mr. E. Seymour Hale, 53 Esplanade Road, Fort, Bombay, and Calcutta.
The Superintendent, American Baptist Mission Press, Rangoon.
Messrs. S. K. Lahiri & Co., Printers and Booksellers, College Street, Calcutta.
Rai Sahib M. Gulab Singh & Sons, Proprietors of the Mufid-i-am Press, Lahore, Punjab.
Messrs. V. Kalyanarama Iyer & Co., Booksellers, &c., Madras.
Messrs. D B. Taraporevala, Sons & Co., Booksellers, Bombay.

AGENTS IN ENGLAND.

Mr. E. A. Arnold 37 Bedford Street, Strand, London.
Messrs. Constable & Co., 2 Whitehall Gardens, London.
Messrs. Sampson Low, Marston & Co., St. Dunstan's House, Fetter Lane, London.
Messrs. Luzac & Co , 46 Great Russell Street, London.
Messrs. Kegan Paul, Trench, Trübner & Co., Charing Cross Road, London.
Mr. B. Alfred Quaritch, 15 Piccadilly, London.
Messrs P. S. King & Son, 2 & 4 Great Smith, Street, Westminister, London.
Messrs. H. S King & Co., 65 Cornhill, London.
Messrs Williams and Norgate, Oxford.
Messrs. Deighton Bell & Co., Cambridge.

AGENTS ON THE CONTINENT.

Messrs. R. Friedlander & Sohn, Berlin, N. W. Carlstrasse, 11.
Mr. Otto Harrassowitz, Leipzig.
Mr. Karl Hiersemann, Leipzig.
Mr. Ernest Leroux, 28 Rue Bonaparte, Paris.
Mr. Martinus Nijhoff, The Hague.

NOTICE.—Books required for private use can be purchased. Applications should be accompanied by a remittance in each case.

All remittances on account of subscriptions to, or prices of, Gazettes, Indian Law Reports or other Government publications available for sale at the Bengal Secretariat Book Depôt, or for cost of advertisements published in the Gazettes should, in future, be made payable to the "Treasurer, Bengal Secretariat, Calcutta." Advices of such remittances, if separately sent, should be addressed to the "Accountant, Bengal Secretariat." All advertisements intended for publication in the *Calcutta* or *Bengali Gazette* should be sent direct to the Superintendent, Government Printing, Bengal.

Books required for the Public Service should be obtained through the Heads of Departments.

☞ *The amounts within parentheses are for packing and postage.*

NEW PUBLICATIONS ISSUED DURING THE CURRENT QUARTER.

APPOINTMENT DEPARTMENT.

Quarterly Civil List of Bengal, corrected up to 1st July 1902. Super-Royal 8vo. Paper cover. Re. 3. (4*a*.)

GENERAL DEPARTMENT.

Report of Emigration from the Port of Calcutta to British and Foreign Colonies, 1901. By the Protector of Emigrants, Calcutta. F'cap. Paper cover. 12*a*. (1*a*.)

Civil Engineering College, Sibpur, Calendar for 1902. Royal 8vo. Paper cover. 12*a*. (2*a*.)

LEGISLATIVE DEPARTMENT.

The Bengal Vaccination Act, 1880 (Bengal Act V of 1880), as modified up to 1st June 1902. Royal 8vo. Paper cover. Price 4*a*. (1*a*.)

The Salt Act, 1864 (Bengal Act VII of 1864), as modified up to 1st July 1902, with an appendix showing the extent to which the Indian Salt Act, 1882, is in force in Bengal. Royal 8vo. Paper cover. 3*a*. (1*a*.)

POLITICAL DEPARTMENT.

Administration Report on the Jails of Bengal for the year 1901. F'cap. Board. Paper cover. Re. 3. (3*a*.)

PUBLIC WORKS DEPARTMENT.

Electric Traction.—Six lectures delivered in March 1902 at the Civil Engineering College, Sibpur, by J. W. Meares, Esq., Electrical Engineer to the Government of Bengal. Royal 8vo. Full cloth. Re. 1-8. (2*a*.)

Classified List and Distribution Return of Establishment of the Public Works Department, Bengal, corrected up to 30th June 1902. Super-Royal 8vo. Paper cover. 4*a*. (1*a*.)

REVENUE DEPARTMENT.

Season and Crop Report of Bengal for the year 1901-1902. F'cap. Paper cover. 8*a*. (1*a*.)

The Sale Law Manual, a Manual of the Revenue and the Patni Sale Laws with Notes and the rules, &c., under them. Royal 8vo. Board. Paper cover. Re. 1-4. (3*a*.)

Price-list of staple food-crops in the local areas of Bengal, for the period from 1st January to 31st March 1901. F'cap. Board. Paper cover. Re. 1. (2*a*.)

Rules for the keeping and inspection of accounts of collections in Government and Wards' Estates. Published under the authority of the Board of Revenue, L. P. Royal 8vo. Board. Paper cover. As. 8. (1*a*.)

The Government Estates' Manual, 1902. Royal 8vo. Board. Paper cover. Re. 1. (3*a*.)

PUBLICATIONS ISSUED BETWEEN THE 1ST JANUARY AND THE 30TH JUNE 1902.

APPOINTMENT DEPARTMENT.

Quarterly Civil List of Bengal corrected up to 1st April 1902. Super-royal 8vo. Paper cover. Price Rs. 3. (4*a*.)

FINANCIAL DEPARTMENT.

The Stamp Manual, 1902. A Manual for the guidance of officers in the administration of the Stamp Department. Royal 8vo. Board. Paper cover. Price Re. 1-8 (6*a*.)

Annual Report on the consumption of Stationery in Bengal during 1900-1901. F'cap. Paper cover. Rs. 3. (2*a*.)

GENERAL DEPARTMENT.

List of Officers in the Subordinate Educational Service, Bengal, corrected up to 1st April 1902. F'cap. Paper cover. 8*a*. (1*a*.)

JUDICIAL DEPARTMENT.

Question Papers set at the Pleadership and Muktearship Examinations for the year 1902. Royal 8vo. Paper cover. Price 2*a*. (1*a*.)

Question Papers set at the Examination of candidates for appointment as Sub-Inspectors of Police. July and November 1901. Royal 8vo. Paper cover. Price 5*a*. (1*a*.)

Question Papers set at the Examination of candidates for recruiting the staff of Superior Police Officers in Bengal and Assam, held in November 1901. Royal 8vo. Paper cover. Price 8*a*. (1*a*.)

LEGISLATIVE DEPARTMENT.

The Court of Wards' Act, 1879 (Bengal Act IX of 1879), in Hindi, as modified up to the 1st July 1901. Royal 8vo. Paper cover. Price 6*a* (1*a*.)

The Calcutta Port Act, 1890 (Bengal Act III of 1890), as modified up to 1st April 1902. Royal 8vo. Paper cover. Price 10*a*. (1*a*.)

MUNICIPAL DEPARTMENT.

Annual Returns of the Lunatic Asylums in Bengal with brief notes for the year 1901. Compiled by the Inspector-General of Civil Hospitals. F'cap. Paper cover. Price Re. 1. (2*a*.)

Account Rules under the Local Self-Government Act, Part VIII. F'cap. Paper cover. Price 8*a*. (.)

Annual Report of the Chemical Examiner's Department, Bengal, 1901. F'cap. Paper cover Price 8*a*. (2*a*.)

PUBLIC WORKS DEPARTMENT.

Distribution Return of Officers and Subordinates employed on Local Works in Bengal, corrected up to 31st December 1901. Super-royal 8vo. Paper cover. Price 2*a*. (1*a*.)

Embankment and Drainage Report of the Government of Bengal, Irrigation Department, for the year 1900-1901. F'cap. Boards Paper cover. Price Rs. 2 (3*a*.)

Classified List and Distribution Return of Establishment corrected up to 31st March 1902. Super-royal 8vo. Paper cover. Price 4*a*. (1*a*.)

Dacca Electric Lighting License, 1902. F'cap. Paper cover. Price 14*a*. (1*a*.)

Notes on the construction of Railways in India (for students) with 5 charts. F'cap Paper cover. Price Re. 1. (1*a*.)

REVENUE DEPARTMENT.

Annual Report of the Burdwan Experimental Farm for the year 1900-1901. F'cap. Paper cover. Price 3*a*. (1*a*.)

Annual Report on the Survey Operations in Bengal during the year 1900-1901 (from 1st October 1900 to 30th September 1901) F'cap. Paper cover. Price Re. 1-8. (2*a*.)

Annual Report of the Director of the Department of Land Records, Bengal, on Settlements, for the year ending 30th September 1901 F'cap. Paper cover. Price 8*a*. (1*a*.)

The Practice and Procedure Manual, published under the authority of the Board of Revenue. Royal 8vo. Board. Paper cover. Price 12*a*. (3*a*).

OLDER PUBLICATIONS.

A General Catalogue of all Government Publications (corrected up to 31st December, 1901) may be obtained *gratis* on application to the Officer in charge, Bengal Secretariat Book Depôt.

Publications for sale at the office of the Chief Inspector of Explosives with the Government of India.

Rules for the manufacture, possession and sale of explosives issued by each of the Local Governments and Administrations. Price 12*a*.

Rules for the transport and importation of explosives issued by the Government of India. Price 12*a*.

Rules for the transport and importation of explosives at the Port of Calcutta Price 4*a*.

GOVERNMENT PUBLICATIONS FOR SALE

BY THE SUPERINTENDENT OF GOVERNMENT PRINTING, INDIA, 8 HASTINGS STREET, CALCUTTA.

[A General Catalogue of all Government Publications may be obtained gratis from the Government Central Press, Calcutta.]

All books published by the Superintendent of Government Printing, India, can be purchased, either directly or through the following or any other booksellers:—

AGENTS IN INDIA.

Messrs. Thacker, Spink & Co., Calcutta and Simla.
Messrs. Newman & Co., Calcutta.
Messrs. Higginbotham & Co., Madras.
Messrs. Thacker & Co., Ld., Bombay.
Messrs. A. J. Combridge & Co., Bombay.
Messrs. V. Kalyanarama Iyer & Co., Madras.
Messrs. D. B. Taraporevala, Sons & Co., Bombay.
Superintendent, American Baptist Mission Press, Rangoon.
Rai Sahib M. Gulab Singh and Sons, Mufid-I-Am Press, Lahore.
Manager, Educational Book Depôts, Nagpur and Jubbulpore.*
Manager of the Imperial Book Depôt, 63 Chandni Chauk Street, Delhi.*
Manager, "East Coast News," Vizagapatam *
Manager, "The Agra Medical Hall and Co-operative Association, Limited" (Successors to A. John & Co.), Agra.*
Mr. T. K. Seetharama Aiyar, Kumbakonam.*
Lala Debi Prasad, Vakil and Manager of Law Press, Cawnpore.*

AGENTS IN EUROPE.

Mr. E. A. Arnold, 37 Bedford Street, Strand, London.
Messrs. Constable & Co., 2 Whitehall Gardens, London.
Messrs. Sampson Low, Marston & Co., St. Dunstan's House, Fetter Lane, London.
Messrs. Luzac & Co., 46 Great Russel Street, London.
Messrs. Kegan Paul, Trench, Trübner & Co., Charing Cross Road, London.
Mr. B. Alfred Quaritch, 15 Piccadilly, London.
Messrs. P. S. King and Son, 2 & 4 Great Smith Street, Westminster.
Messrs. H. S. King & Co., 65 Cornhill, London, are also Agents for the sale of the Indian Army List.
Mr. Otto Harrassowitz, Mr. Karl Hiersemann } Leipzig.
Messrs. R. Friedlander & Sohn, Berlin, N. W. Carlstrasse, 11.
Mr. Ernest Leroux, 28 Rue Bonaparte, Paris.
Mr. Martinus Nijhoff, the Hague, Holland.
Messrs. Williams and Norgate, Oxford.
Messrs. Deighton Bell & Co., Cambridge.

* Agents for sale of the Legislative Department publications.

NOTICE.—Books and Acts required for private use only can be purchased. Applications should be accompanied by a remittance, unless it is wished that the books should be sent by value-payable post, in which case, besides the ordinary postage, an additional charge is made for registration and commission.

Books and Acts required for the public service should be obtained through Local Governments to whom the applicant is subordinate.

Applications for Government publications which are no longer in print should be made to the Agents of the particular Government under whose orders they were originally issued.

The amounts within parentheses are for packing and postage.

List of New Books published during the Current Quarter.

LEGISLATIVE DEPARTMENT.

List of General rules and orders under Statutes and General Acts in force in British India, Corrected to 31st March 1902. Royal 8vo. Stitched. Re. 1 8*a*. or 2*s*. 3*d*. (3*a*.)

HOME DEPARTMENT.

Report on the Nature of Kala-Azar, by Major Ronald Ross, I.M.S. F'cap. Board. Rs. 2 or 3*s*. (3*a*.)

FINANCE AND COMMERCE DEPARTMENT.

List of Officers in the Finance and Commerce Department, Corrected to 1st May 1902. Royal 8vo. Paper cover. 4*a*. or 5*d*. (1*a*.)

Statistics compiled from the Finance and Revenue Accounts of the Government of India. Receipts and Disbursements of Home and Indian Accounts from 1st April 1892 to 31st March 1900. F'cap. Board. Rs. 2 or 3*s*. (7*a*.)

STATISTICAL DEPARTMENT.

Review of the Trade of India in 1901-1902. F'cap. Paper cover. 8*a*. or 9*d*. (2*a*.)

Statistics of Cotton Spinning and Weaving in the Indian Mills in April 1902, and in the corresponding month of 1900 and 1901. Royal 8vo. Stitched. 2*a*. or 2*d*. (1*a*.)

Accounts of the External Land Trade of British India for the month of April 1902. Royal 8vo. Stitched. 8*a*. or 9*d*. (2*a*.)

Trade and Navigation Accounts of British India for the month of June 1902. No. 3. Royal 8vo. Stitched. 8*a*. or 9*d*. (2*a*.)

Area and yield of certain crops from 1891-1892 to 1901-1902. F'cap. Paper cover. 5*a*. or 6*d*. (3*a*.)

Accounts relating to the Trade carried by Rail and River in India in the quarter and in the twelve months ending March 1902, compared with the corresponding periods of the years 1900 and 1901. No. 4 of 1901-1902. F'cap. Paper cover. 8*a*. or 9*d*. (2*a*.)

MILITARY DEPARTMENT.

List of Light-houses and Light-vessels in British India, including those in the Gulf of Aden as existing at the end of 1901. 21st Issue. Royal 8vo. Board. Re. 1 or 1*s*. 6*d*. (2*a*.)

The Quarterly Indian Army List for July 1902. Royal 8vo. Paper cover. Rs. 3 or 4*s*. 6*d*. (2*a*.)

PUBLIC WORKS DEPARTMENT.

Administration Report on the Railways in India for the calendar year 1901. F'cap. Paper cover. Rs. 2 or 2*s* 8*d*. (8*a*.)

Public Works Department Classified List and Distribution Return of Establishment. Corrected to 30th June 1902. Super Royal 8vo. Paper cover. Rs. 2 or 3*s*. (4*a*.)

Classified List of the Subordinate Establishment. Corrected to 30th June 1902. Super Royal 8vo. Paper cover. 4*a*. or 5*d*. (1*a*.)

REVENUE AND AGRICULTURE DEPARTMENT.

Technical Art Series for 1901. Together with their explanatory text and cover. Nos. I to XII. 4*a*. or 5*d*. (3*a*.) per plate.

List of Books published from January to June 1902.

LEGISLATIVE DEPARTMENT.

Chronological Tables of the Indian Statutes compiled, under the orders of the Government of India, by F. G. Wigley, Esq. Royal 8vo. Cloth. *Rs*. 4 or 6*s*. (7*a*.)

The Indian Penal Code (Act XLV of 1860), as modified up to the 1st July 1899, and with foot-notes brought down to 1st April 1901. *Rs*. 2-8 or 3*s*. 9*d*. (6*a*.)

The Indian Factories Act, 1881, as modified up to the 1st April 1891 (with foot-notes brought down to 1st July 1901). 5*a*. 6*p*. or 6*d*. (1*a*. 6*p*.)

Effect of Legislation for 1898, 1899, and 1900. *Re*. 1 or 1*s*. 6*d*. (2*a*.)

Chronological Tables of the Indian Statutes, 1901. *Re*. 1 or 1*s*. 6*d*. (2*a*.)

A Digest of Indian Law Cases, Vol. III. Cloth bound. *Rs*. 12 or 18*s*. (10*a*.)
Ditto ditto ditto. Quarter bound. *Rs*. 13 or 19*s*. 6*d*. (10*a*.)

Act IX of 1901. An Act further to amend the Indian Articles of War. 1*a*. or 1*d*. (1*a*.)

Act X of 1901. An Act further to amend the Court-fees Act, 1870. 1*a*. 3*p* or 1*d*. (1*a*.)

Act XI of 1901. An Act to facilitate the cita-tion of certain Enactments and to amend and repeal certain obsolete Enactments.

Regulation III of 1901. A Regulation further to provide for the suppression of crime in certain frontier districts. 7*a*. 6*p*. or 9*d*. (1*a*. 6*p*.)

Regulation IV of 1901. A Regulation to make better provision for the suppression of murderous outrages in certain frontier tracts. 2*a*. 6*p*. (1*a*.)

Regulation V of 1901. A Regulation further to amend the Upper Burma Land and Revenue Regulation, 1899. 1*a*. 9*p*. or 2*d*. (1*a*.)

Regulation VI of 1901. A Regulation to re-peal so much as is unrepealed of the Punjab Frontier Regulation, 1872, and of the Hazara Settlement Rules, 1*a*. or 1*d* (1*a*.)

Regulation VII of 1901. A Regulation to alter certain of the laws in force in the North-West Frontier Province, to declare that certain Enactments are in force therein, and to bar the application of certain others hereto. 11*a*. or 1*s*. 3*d*. (2*a*.)

Corrigendum slip for Act XIII of 1900. 1*a*.

Title-page and Contents to Acts of 1901. 1*a*. 6*p*. (1*a*.)

Index to Acts of 1901. 2*a*. 9*p*. or 3*d*. (1*a*.)

The European Vagrancy Act, 1874 (IX of 1874), as modified up to 1st December, 1901. 6*a*. 6*p*. or 7*d*. (1*a*.)

The Chaukidars Act, 1856 (XX of 1856), as modified up to 1st December, 1901. 7*a*. 6*p*. or 8*d*. (1*a*.)

The Registration of Ships Act, 1841 and 1850 (X of 1841 and XI of 1850), as modified up to 1st December 1893, and with foot-notes brought down to 1st December, 1901. 7*a*. or 7*d*. (1*a*.)

Table showing the effect of Legislation in the Governor-General's Council during 1901. 6*a*. or 6*d*. (1*a*.)

LIST OF TRANSLATIONS AND TRANSLITERATIONS OF ACTS PUBLISHED FROM 1ST OCTOBER 1901 TO 31ST MARCH 1902.

The Cattle-trespass Act, 1871 (I of 1871), as modified up to the 1st April 1901. In Urdu. 2*a*. (1*a*.)
Ditto. In Hindi. 2*a*. (1*a*.)

Act IX of 1901 (an Act further to amend the Indian Articles of War). In Urdu. 3*p*. (1*a*.)
Ditto. In Hindi. 3*p*. 1*a*.

Act X of 1901 (an Act further to amend the Court-fees Act, 1870). In Urdu. 3*p*. (1*a*.)
Ditto. In Hindi. 3*p*. (1*a*.)

HOME DEPARTMENT.

Chronological Tables for 1902, embodying Notifications by the Government of Bengal and Government of India prescribing holidays during the year with corresponding dates in English, Bengali, Velati, Fusli, etc. Royal 8vo. Paper cover. 4*a*. or 4*d*. (1*a*.)

Annual Report of the Sanitary Commissioner with the Government of India, 1900, with Appendices and Returns of Sickness and Mortality among European Troops, Native Troops, and Prisoners in India, for the year. F'cap. Boards. *Rs*. 3 or 4*s*. 6*d*. (8*a*.)

Report of Proceedings of the Central Indigen-ous Drugs Committee of India, Volume I. Royal 8vo. Board. Rs. 3-8 or 5*s*. 9*d*. (7*a*.)

List of Europeans and others in the English Factories in Bengal at the time of the Siege of Calcutta in the year 1756, with an appendix containing lists of European Sufferers. By S. Charles Hill, Esq., B.A., B.SC. Super-Royal 4to. Paper cover. Rs 2 or 3*s*. (3*a*.)

Judicial and Administrative Statistics for British India. 6th issue, 1900-1901, and preceding years. F'cap. Board. Rs. 2 or 3*s*. (10*a*.)

The Countess of Dufferin's Fund Seventeenth Annual Report of the National Association for Supplying Female Medical Aid to the Women of India for the year 1901. Super-Royal 8vo. Re. 1 or 1*s*. 4*d*. (3*a*.)

DEPARTMENT OF REVENUE AND AGRICULTURE.

List of Officers in the Survey and other Scien-tific and Minor Departments subordinate to the Government of India in the Department of Revenue and Agriculture, corrected to 1st July 1901. Royal 8vo. Paper cover. 8*a*. or 9*d*. (2*a*.)

Report of the Committee on the Establish-ment of Co-operative Credit Societies in India. F'cap. Paper cover. 4*a*. or 5*d*. (2*a*.)

Forest Flora of the School Circle, North-Western Provinces, being a descriptive list of the indigenous woody plants of the Shaharanpur and Debra Dun districts and the adjoining portions of the Tehri-Garhwal State in the North-Western Provinces, with Analyses. Double-Crown. 16mo. Full cloth. Re. 1-8 or 2*s*. (3*a*.)

Archæological Exploration in Chinese Turke-stan. By Dr. M. A. Stein. Royal 4to. Cloth. Rs. 4 or 6*s* (4*a*.)

Land Revenue Policy of the Indian Govern-ment. Royal 8vo. Cloth. 10*a*. or 1*s*. (4*a*.)

FOREIGN DEPARTMENT.

Report on the Administration of the Baluchis-tan Agency for 1900-1901. Re. 1-8 or 2*s*. 3*d*. (3*a*.)

Report on the Administration of the Hyder-abad Assigned Districts for the year 1900-1901. F'cap. Limp cover. Rs. 3-12 or 5*s*. 6*d*. (6*a*.)

Report on the Political Administration of the territories within the Central India Agency for 1900-1901. F'cap. Limp cover. *Rs*. 1-8 or 2*s*. (3*a*.)

Annotated Returns of the Dispensaries in Central India for 1900. F'cap. Limp cover. *Re*. 1-8 or 2*s*. (3*a*.)

Report on the Administration of the Civil and Military Station of Bangalore for the year 1900-1901. F'cap. Board. 8*a*. or 9*d*. (2*a*.)

Grammar and Vocabulary of Waziri Pashto. By J. G. Lorimer, Esq., I.C.S. Royal 8vo. Board. Rs. 3 or 4*s*. 6*d*. (5*a*.)

FINANCE AND COMMERCE DEPARTMENT.

List of Officers in the Finance and Commerce Department. Corrected to December 1901; to April 1902. 4*a*. or 5*d*. (1*a*.) each.

Papers relating to the proposed Establishment of a Central Bank in India. F'cap. Board. Re. 1 or 1*s*. 6*d*. (4*a*.)

Administration Report of the Mint at Bombay and Calcutta for 1900-1901. F'cap. Paper cover. Re. 1 or 1*s*. 6*d*. (2*a*.)

Schedule IV of the Indian Tariff Act (VIII of 1878) of 1902. Royal 8vo. Stitched. 6*a*. or 6*d*. (1*a*.)

STATISTICAL DEPARTMENT.

Trade and Navigation Accounts of British India for the months of December 1901 to May 1902. Royal 8vo. Stitched. 8*a*. or 9*d*. (2*a*.) each.

Accounts of the External Land Trade of British India for the months of September 1901 to March 1902. Royal 8vo. Stitched. 8*a*. or 9*d* (2*a*.) each.

Accounts relating to the Trade carried by Rail and River in India in the quarter ending September 1901. Compared with the corresponding periods of the years 1899 and 1900 No. 2 of 1901-1902. F'cap. Paper cover. 8*a*. or 9*d*. (2*a*.)

Ditto ditto ending December 1901. Compared with the corresponding periods of the years 1899 and 1900. No. 3 of 1901-1902. F'cap. Paper cover. 8*a*. or 9*d*. (2*a*.)

Accounts of the Trade of the French Possesions in India in the year ending 31st March 1901, and the four preceding years. F'cap. Paper cover. 2*a* or 3*d*. (1*a*.)

Statistics of Cotton Spinning and Weaving in the Indian Mills in January, February, and March 1902; in the ten months, April 1901 to January 1902; in the eleven months, April 1901 to February 1902, and in the twelve months, April 1901 to March 1902. Compared with the corresponding period of 1899-1900 and 1900-1901. Royal 8vo. Stitched. 2*a*. or 2*d*. (1*a*.) each.

Accounts of the Trade of Aden in the year ending 31st March 1901, and the four preceding years. F'cap. Paper cover. 10*a*. or 1*s*. (2*a*.)

Accounts of the Trade of the Portuguese Possessions in India in the year 1899-1900 and the four preceding years. F'cap. Paper cover. 2*a*. 3*d*. (1*a*.)

Prices and Wages in India. Nineteenth issue, 1902. Super-Royal 4to. Board. Re. 1-8 or 2*s* (9*a*.)

COMPTROLLER-GENERAL.

Finance and Revenue Accounts of the Government of India for 1900-1901. F'cap. Board. Rs. 2 or 3*s*. (8*a*.)

Appropriation Report on the Accounts of the Government of India for 1900-1901. By A. F. Cox, Esq. F'cap. Board. 8*a*. (6*a*).

MILITARY DEPARTMENT.

The Monthly Indian Army List for February to March, May, June 1902. Royal 8vo. Paper cover. Re. 1-8 or 2*s*. 3*d*. (4*a*.) each.

Return of Wrecks and Casualties in Indian Waters for the year 1900. F'cap. Stiff cover. 12*a*. or 1*s*. (3*a*.)

Military Works Services Classified List and Distribution Return. Corrected up to 31st December 1901. Royal 8vo. Paper cover. 4*a*. or 5*d*. (1*a*.)

Indian Military Budget Estimate for the year 1902-1903. F'cap. Board. Re. 1-8 or 2*s*. 3*d*. (8*a*.)

PUBLIC WORKS DEPARTMENT.

Public Works Department Classified List and Distribution Return of Establishment. Corrected up to 31st December 1901. Super-Royal 8vo. Paper cover. Rs. 2 or 3*s*. (4*a*.)

Classified List (Public Works Department), Subordinate Establishment. Corrected up to 31st December 1901. Super-Royal 8vo. Paper cover. 4*a*. or 4*d*. (1*a*.)

Budget Estimate of the Indo-European Telegraph Department for the year 1902-1903. F'cap. Paper cover. 8*a*. or 9*d*. (1*a*. 6*p*.)

Budget Estimate of the Indian Telegraph Department for the year 1902-1903. F'cap. Paper cover. 8*a*. or 9*d*. (1*a*. 6*p*.)

History of Services of the Officers of the Engineer, Accounts, and State Railway Revenue Establishments. Corrected to 31st December 1901. In two Volumes. Royal 8vo. Board. Vol. I, Rs. 2-8 or 3*s*. 9*d*. (6*a*.). Vol. II Rs. 2-8 or 8*s*. 9*d*. (6*a*.) Complete, Rs. 5 or 7*s*. 6*d*. (9*a*.)

List of new books for sale at the Thomason College, Roorkee, which were not advertised before.

Roorkee Treatise on "Railways," 4th Edition, revised by F. Wolley Dod, F.C.H. Price, Rs. 3 per copy.

Roorkee Treatise on "Irrigation Works." By Lieutenant-Colonel J. Clibborn, I.S.C., B.A., L.C.E., C.I.E. Price Rs. 9 per copy.

Roorkee Treatise on "Sanitary Engineering." Compiled by Lieutenant-Colonel J. Clibborn, I.S.C., B.A., L.C.E., C.I.E. Price, Rs. 4-8 per copy.

Roorkee Manual of "Applied Mechanics," Volume II. The stability of structures mostly by graphic methods, by Lieutenant-Colonel J. H. C. Harrison, R.E. Price, Rs. 8-2 per copy.

Roorkee Manual of Hydraulics. Price per copy, Re. 1-4. (No. XIX, Elementary Treatise). By E. F. Tipple, Esq., B.A.

Designs for Wooden Bridges, together with rules for calculating the area of waterway, &c., and Plates. By late Rai Bahadur Kunhya Lal. Price per set, Rs. 4-2.

Pamphlet on Examination for Acid Radicals: Tables giving Analysis of Acids. Price per copy, 8*a*.

Pamphlet on Examination for Acid Bases: Tables giving Analysis of Metallic Bases. Price, 8*a*. per copy.

Pamphlet on Note on Masonry Arches (College publication). Price, 4*a*. per copy.

Pamphlet on Small Direct Well Pumping Installations. Price, 4*a*. per copy.

Pamphlet on Experiments made on the passage of water through the sand of the Chenab River at the Khanki Weir. By Lieutenant-Colonel J. Clibborn, I.S.C., C.A., L.C.E., C.I.E. Price per copy, 12*a*.

Indian Household Account Book for a period of two years, comprising Daily Table Expense Account, Bread, Butter and Milk Account, Dhobey's Account, Servants' Wages Account, etc. Price, Rs. 3 per copy.

Cash must accompany order. Articles are sent by V.-P. P. to persons in Government employment only.

Application is to be made to the Curator, Thomason College Book Depôt, Roorkee.

Half-yearly list of new books and periodicals for sale at the Library of the Asiatic Society of Bengal, 57 Park Street, Calcutta.

ASIATIC SOCIETY'S PUBLICATIONS.

Proceedings Nos. 9 to 11 of 1901 and No. 1 of 1902, at 8*a*.
Journal, Part I, No. 2 of 1901, at Re. 2.
,, Part II, No. 2 of 1901, at Rs. 2.
,, Part III, No. 2 of 1901, and Part III, No. 1 of 1902, at Rs. 2.

BIBLIOTHECA INDICA.

Upamitibhavaprapancha Katha. Fasc. 4 at 6*a*.
Catapatha Brahmana. Vol. I, Fasc. 5, at 6*a*.
Varsakriya Kaumudi. Fasc. 3 and 4, at 6*a*.
Nityacarapaddhati. Fasc. 2 and 3, at 6*a*.
Apastamba Sranta Sutra. Vol. III, Fasc. 16, at 6*a*.
Mahabhasyaprodipodyata. Vol. II, Fasc. 2 and 3, at 6*a*
Al-Muquddasai. (English.) Vol. I, Fasc. 2, at 12*a*.

List of Books published by the Meteorological Department during the current quarter.

Monthly Weather Review of India for the month of February 1902. By John Eliot and Lala Hem Raj (illustrated by 5 plates) Quarto. Paper cover. Re. 1
Indian Meteorological Memoirs, Volume XII, Part III By John Eliot (illustrated by 68 plates) Quarto Paper cover. Rs. 3.

List of books published by Meteorological Department from 1st January to 30th June, 1902.

Monthly Weather Review of India, from September, 1901, to January, 1902. By W. L. Dallas (illustrated by five plates). Quarto. Paper cover. Re. 1 per month.
Report of the Director, Government Observatory, Bombay, for the year ending 31st December, 1901. By N. A. F Moos. Quarto. Paper cover
Report on the Kodaikanal and Madras Observatories for the period 1st April to 31st December, 1901. By C Michie Smith. Quarto. Paper cover.
Indian Meteorological Memoirs, Volume XII, Part II. By John Eliot Quarto. Paper cover. Rs. 3.
Indian Meteorological Memoirs, Volume XIII. By John Eliot. Quarto. Paper cover Rs 5.

The Indian Law Reports.

Published under Authority.

THE Indian Law Reports, published under the authority of the Governor-General in Council, appear in monthly parts, published as soon as possible after the first of each month at Calcutta, Madras, Bombay, and Allahabad, and comprise four series—one for the Calcutta High Court, a second for the Madras High Court, a third for the Bombay High Court, and a fourth for the Allahabad High Court. The cases heard by the Privy Council on appeal from each High Court are reported in the Series for that High Court. Cases heard by the Privy Council on appeal from Provinces in India not subject to any High Court are reported in the Calcutta Series.

The Calcutta Series is distributed by the Bengal Secretariat Book Depôt, and the Madras, Bombay, and Allahabad Series are distributed direct from Madras, Bombay, and Allahabad respectively.

In supersession of the previous advertisements, on and from the 1st January 1889 the terms of subscription and sale will be as follows for current issues as well as for back numbers of the reports from 1876:—

Terms of subscription, payable annually in advance.

For the complete series, *including postage* (Inland rate) Rs. 22-8.

Ditto, ditto (Overland rate) Rs. 28.

	Without postage.	With postage.
	Rs. A. P.	Rs. A. P.
For the Calcutta Series	10 0 0	12 8 0
,, each of the Madras, Bombay, and Allahabad Series	6 0 0	7 0 0
,, a part of the Calcutta Series purchased separately (*inclusive of postage in India*)	.....	2 0 0
,, a part of each of the Madras, Bombay, and Allahabad Series purchased separately (*inclusive of postage in India*)	.....	1 0 0

The following are the rates at which deductions will be made for parts out of print and at which duplicate copies will be supplied to subscribers when required in place of copies lost in transit, provided complaint of non-receipt is made to the Publisher within three months of the date of publication:—

	For town.	For mufassal.
	Rs. A. P.	Rs. A. P.
For the Calcutta Series, per copy ...	0 8 9	0 10 3
,, each of the Madras, Bombay, and Allahabad Series, per copy ..	0 5 3	0 5 9
,, the Calcutta Series, for the year	7 2 6	8 6 3
,, each of the Madras, Bombay and Allahabad Series, for the year	4 4 6	4 11 3

Persons desiring to subscribe for or purchase the Report should apply to—

The Superintendent, Government Press, Madras.

,, Superintendent, Government Central Press, Bombay.

,, Curator of Government Books, United Provinces of Agra and Oudh, Allahabad.

,, Officer in charge, Bengal Secretariat Book Depôt, Calcutta.

Orders and subscriptions for 1902 should be at once registered and remitted by money-order payable to the Treasurer, Bengal Secretariat, Calcutta.

ADVERTISEMENTS will be received for publication on the wrappers of the Indian Law Reports, Calcutta Series, at the following rates, payable in advance—

	One page.	Half page.	Quarter page.
	Rs.	Rs.	Rs.
For one issue ...	20	14	9
,, three issues ...	55	36	24
,, six ,, ...	100	68	45
,, nine ,, ...	145	96	64
,, twelve ,, ...	180	120	80

SEVERAL volumes of the BENGAL LAW REPORTS, from August 1868 to December 1875, and FULL BENCH RULINGS, Parts I and II, are available at the following rates:—

	Without postage.	With postage.
	Rs. A. P.	Rs. A. P.
Bengal Law Reports, for one year ...	20 0 0	22 8 0
Single copies, Rs. 2 per copy.		
Full Bench Rulings, Parts I and II ...	20 0 0	22 8 0

Obtainable at the Bengal Secretariat Book Depôt, Writers' Buildings, Calcutta.

Remittances to be forwarded to the Treasurer, Bengal Secretariat, Writers' Buildings, Calcutta.

The complete series of the INDIAN LAW REPORTS for the years 1876 to 1885, and 1890 to 1893, 1894, 1896 to 1901 having now been reprinted, are available, and may be purchased for all the years, or any particular year, on application to the Officer in charge, Bengal Secretariat Book Depôt.

The wanting parts of the Reports for the remaining years are being reprinted, and complete Reports from the beginning to date will be available shortly.

NOTICE TO SUBSCRIBERS.

SUBSCRIBERS are hereby informed that, unless complaint of non-receipt of any number is made to the Publisher of the series within three months of the date of publication, the benefits of the subscription rates for copies lost in transit will not be allowed, and full rates will be charged. The price per copy of each of the four series at subscription rates and at full rates is shown below:—

	Per copy. Subscription rate.					
	Town.			Mofussal.		
	Rs.	A.	P.	Rs.	A.	P.
Calcutta Series	0	8	9	0	10	3
Each of the Madras, Bombay, and Allahabad Series ...	0	5	3	0	5	9

	Full rate.					
	Town.			Mofussal.		
	Rs.	A.	P.	Rs.	A.	P.
Calcutta Series	2	0	0	2	0	0
Each of the Madras, Bombay, and Allahabad Series ...	1	0	0	1	0	0

Notice.

THE *CALCUTTA GAZETTE*.

The 1st March 1901.—From this date the subscription to, and postage for, the *Calcutta Gazette* will be at the following rates, payable in advance:—

PER ANNUM.	For Calcutta.	For the Mufassal, including postage.
	Rs. A.	Rs. A.
Entire *Gazette*	15 0	20 0
Parts I, Ia and Ib together ...	5 0	7 8
Part II	1 0	2 12
Parts III, IV and IVa together	4 0	6 0
,, V and VI together ..	2 0	3 0
Appendix (Marine Notifications)	1 0	2 12
Supplement	5 0	7 8
PER ISSUE.		
Entire *Gazette*	0 8	0 10
Supplement	0 4	0 5

N.B.—Separate Parts of each issue of the *Gazette*, and occasionally important Rules and Extracts, can be obtained from the Officer in charge, Bengal Secretariat Book Depôt, at the rate of one anna for every sixteen pages or a fraction thereof. Postage according to weight.

RATES FOR ADVERTISEMENTS in the *Calcutta Gazette*:—

Full Page, per issue	Rs. 20
Half ,, ,, ,, ...	,, 10

Casual advertisements, 4 annas per line.

Annual Statement of the Sea-borne Trade and Navigation of the Bengal Presidency and of its Chief Port (Calcutta), and each of its Subordinate Ports—Chittagong, Balasore, Cuttack, Pooree, and Naraingunge, Volumes I and II. Price Rs. 20 for 1899-1900. Published at the Calcutta Custom House. Previous years' volumes can also be obtained at the same price.

Parts I, II, and III of a Descriptive Catalogue of the Sanskrit Manuscripts in the Library of the Calcutta Sanskrit College, prepared by Pandit Hrishikesa Sastri and Babu Siva Chandra Gui, M.A., B.L., of that College are offered to the public for sale. The Catalogue is to be completed in 28 parts, the price of each part being 12 annas a copy, exclusive of postage. Copies can be obtained, from the Principal of the Sanskrit College, Calcutta.

The Calcutta Gazette.

WEDNESDAY, AUGUST 13, 1902.

PART IV.

Bill of the Bengal Council.

GOVERNMENT OF BENGAL.

LEGISLATIVE DEPARTMENT.

THE following Bill was introduced in the Council of the Lieutenant-Governor of Bengal on the 11th August, 1902, and is hereby published for information, together with the Statement of Objects and Reasons:—

A

BILL

To validate certain transfers, made under the Bengal Tenancy Act, 1885, of shares in permanent tenures and shares in holdings at fixed rents or fixed rates; and to amend sections 18 and 106 of that Act.

VIII of 1885.

WHEREAS section 12 of the Bengal Tenancy Act, 1885, prohibits registering-officers from registering any instrument purporting or operating to transfer a permanent tenure unless the prescribed landlord's fee is paid to them, for transmission to the landlord;

And whereas section 13 of the said Act directs the Civil Courts, before confirming the sale of a permanent tenure in execution of a decree other than a decree for arrears of rent, and before making a decree or order absolute for the foreclosure of a mortgage of a permanent tenure, to require the purchaser or mortgagee to pay the prescribed landlord's fee, for transmission to the landlord;

And whereas section 17 of the said Act declares that the said sections 12 and 13, among other sections, shall apply also to the transfer of a share in a permanent tenure;

And whereas section 18 of the said Act declares that a raiyat holding at a rent or rate of rent fixed in perpetuity shall be subject to the same provisions with respect to the transfer of his holding as the holder of a permanent tenure;

And whereas, in consequence of instructions erroneously issued by the Inspector General of Registration in the year 1888, numerous transfers of shares in such tenures and holdings have been registered, and numerous sales of, and foreclosures of, mortgages of, shares in such tenures and holdings have been effected, under the said sections, without payment of the said fee;

And whereas it is expedient to declare that the said transfers, sales and foreclosures shall not be deemed to be invalid merely on the ground that the said fee was not paid at or before the date of the transaction;

And whereas doubts have been expressed as to whether clause (*a*) of section 18 of the said Act applies to transfers of, and successions to, shares in the holding of a raiyat holding at a rent or rate of rent fixed in perpetuity, and it is expedient to remove such doubts;

And whereas it is also expedient to amend section 106 of the said Act in manner hereinafter appearing;

And whereas, the said Act having been passed by the Governor General of India in Council, the sanction of the Governor General has been obtained, under section 5 of the Indian Councils Act, 1892, to the passing of this Act; 55 Vict., c. 14.

It is hereby enacted as follows :—

Validation of certain transfers of shares in tenures and holdings at fixed rates.

1. No transfer heretofore made under section 12, section 13, section 17 or section 18 of the Bengal Tenancy Act, 1885, of— VIII of 1885.

(*a*) a share in a permanent tenure, or

(*b*) a share in the holding of a raiyat who, at the time of the transfer, held such share at a rent or rate of rent fixed in perpetuity,

shall be deemed invalid merely on the ground that the landlord's fee prescribed by the said section 12 or the said section 13 was not paid at or before the time when the transfer was effected; provided that the said fee has at some subsequent time, either before or after the commencement of this Act, been—

(*i*) paid to the landlord, or

(*ii*) deposited, together with the process-fee referred to in the said section 12 or the said section 13, as the case may be, in the Collector's office, for payment to the landlord.

Saving of section 88.

2. Nothing in section 1 shall be deemed to affect the provisions of section 88 of the said Bengal Tenancy Act, 1885.

Amendment of section 18.

3. In clause (*a*) of section 18 of the said Bengal Tenancy Act, 1885, after the word "holding" the words "or a share in his holding" shall be inserted.

Amendment of section 106.

4. (*1*) In section 106 of the said Act, for the words and figures "a dispute arises at any time within two months from the date of the certificate of the final publication of the record-of-rights under section 103A, sub-section (*3*), regarding any entry which the Revenue-officer has made in, or any omission made from, the record," the following words and figures shall be substituted, namely :—

"a dispute arises regarding any entry which the Revenue-officer has made in, or any omission made from, a record-of-rights finally published under section 103A, sub-section (*3*)."

(*2*) In the same section, after the words "a suit may" the words "within two months from the date of the certificate of the final publication of the record" shall be inserted.

Short title.

5. This Act may be called the Bengal Tenancy (Validation and Amendment) Act, 1902.

STATEMENT OF OBJECTS AND REASONS.

THE first object of this Bill is to validate transfers of shares in tenures and holdings at fixed rents or fixed rates, made in past years by registered documents and by sales in execution of decrees of Courts, without the payment in either case of the landlord's fees prescribed by section 12 of the Bengal Tenancy Act VIII of 1885.

Section 12 of the Bengal Tenancy Act prohibits Registering Officers from registering any instrument purporting or operating to transfer a permanent tenure, unless the prescribed landlord's fee is paid to them for transmission to the landlord. Section 17 of the Act declares that the said section 12, among other sections, shall apply also to the transfer of a share in a permanent tenure. In the year 1888, in consequence of the provisions of section 17 having been overlooked, Registering Officers were instructed not to receive the prescribed fee in the case of instruments transferring a share in a permanent tenure. These erroneous instructions extended also to the case of instruments transferring a share in the holding of a raiyat enjoyed at a rent or rate of rent fixed in perpetuity. The instructions were not withdrawn till the 19th of September, 1899. Meanwhile numerous transfers of shares in such tenures and holdings were registered without payment of the prescribed landlord's fee.

Section 13 of the Act directs the Civil Courts, before confirming the sale of a permanent tenure in execution of a decree, other than a decree for arrears of rent, and before making a decree or order absolute for the foreclosure of a mortgage of a permanent tenure, to require the purchaser or mortgagee to pay the prescribed landlord's fee for transmission to the landlord. The fact that section 17 makes section 13, among other sections, applicable to shares in a permanent tenure, has frequently been overlooked, and it is believed that numerous sales and foreclosures of shares in permanent tenures and shares in holdings at fixed rates have been effected under the Act without payment of the fee in question.

2. To obviate the oversights both of the executive authorities and of the Civil Courts above explained, it is considered expedient to legislate on the subject, by declaring that the transfers, sales and foreclosures mentioned above shall not be deemed to be invalid merely on the ground that the landlord's fee was not paid at or before the date of the transaction.

3. Section 18 of the Tenancy Act deals with the transfer of, and the succession to, raiyats' holdings held at a rent, or rate of rent, fixed in perpetuity. There is no provision in this section, or in succeeding sections, expressly placing the transfer of or succession to a share of such a holding on the same footing as the transfer of a share in a tenure is placed by section 17. As it is expedient to remove all doubts as to whether the transferee of a share in a holding at a rent or rate of rent fixed in perpetuity is in the same position as a transferee of a share in a permanent tenure, the present opportunity is taken to amend section 18 by inserting the words "or a share in his holding" after the word "holding."

4. The second object of the Bill is to indicate clearly the period of limitation for the institution of suits under section 106 of the Bengal Tenancy Act.

The Settlement Officer of Dacca rejected certain applications under section 106, as they were filed after the expiry of two months from the date of the certificate of final publication. On this, appeals were preferred to the Special Judge, who decided that the section did not limit the time within which the suit might be instituted, but that it limited the applicability of the section to cases in which disputes have, as a matter of fact, arisen within a certain time. To remove the inconvenience that may arise by the indefinite prolongation of proceedings by Settlement Officers if a period within which suits may be brought under section 106 is not fixed, it is considered desirable to amend that section, so as to indicate clearly that it is meant to limit the period within which a suit may be instituted, and not the period within which the disputes may arise.

W. C. MACPHERSON.

The 7th August, 1902.

CALCUTTA;
The 11th August, 1902.

F. G. WIGLEY,
Secretary to the Bengal Council, and
Assistant Secretary to the Govt. of Bengal,
Legislative Department.

APPENDIX TO

The Calcutta Gazette.

WEDNESDAY, AUGUST 13, 1902.

NOTICES TO MARINERS.

GOVERNMENT OF BENGAL—MARINE DEPARTMENT.

NOTICE TO MARINERS—No. 235.

[First Publication.]

INDIA, WEST—BOMBAY COAST.

Bombay harbour—Temporary removal of the Outer light-vessel.

THE Bombay Government has given notice (No. 87 of 1902) that the Light-vessel *Bombay* will be brought in for docking, examination and repairs on the 15th October 1902. During the period she is off her station a Pilot Schooner, anchored in the Light-vessel's position, will exhibit, in addition to her Anchor Light, two steamers' Masthead Lights, lashed back to back and suspended on a stay between the masts at a height of 56 feet above the water line.

E. J. BEAUMONT, COMDR., R.I.M.,
Port Officer of Calcutta.

Published for general information.

C. B. BAYLEY,
Asst. Secy., Marine Department.

CALCUTTA, *the 5th August 1902.*

GOVERNMENT OF BENGAL—MARINE DEPARTMENT.

NOTICE TO MARINERS—No. 236.

[First Publication.]

INDIA, WEST—MALABAR COAST.

Tellicherri—Positions of Port pillars.

THE Bombay Government has given notice (No. 88 of 1902) that the present positions of the Port Pillars at Tellicherri are as follows:—

North Port Pillar is situated on the point westward of the entrance to Anjekandi River and from it—

Tellicherri Light-house bears	...	S. 47° 30′ E.
Kodali Point bears ...	...	S. 79° 30′ E.
82-feet Hill bears ...	...	N. 18° 30′ W.

Distance 200 feet.

South Port Pillar is situated on the Nilot Point and from it—

Tellicherri Light-house bears	...	N. 38° 30′ W.
207-feet Hill bears ...	...	N. 62° 30′ E.
Parchikun Hill bears ...	...	S. 87° 00′ E.

Bearings are true.

This Notice affects the following Admiralty Chart:—Anchorages on the West Coast of India—Kannanur Anchorage—Tellicherri Anchorage, No. 1322, and West Coast of Hindustan Pilot, 4th Edition, 1898, page 139.

E. J. BEAUMONT, COMDR., R.I.M.,
Port Officer of Calcutta.

Published for general information.

C. B. BAYLEY,
Asst. Secy., Marine Department.

CALCUTTA, *the 5th August 1902.*

GOVERNMENT OF BENGAL—MARINE DEPARTMENT.

NOTICE TO MARINERS—No. 237.

[First Publication.]

BAY OF BENGAL—Burma coast.

Rangoon river—Umbrella beacon blown down—New beacon erected.

The Bombay Government has given notice (No. 90 of 1902) that a new beacon has been erected S. 25° E. 250 feet from the site of the Umbrella beacon which was blown down in the cyclone of 6th May 1902

This new beacon is only of use for No. 1 track, Choki Lumps. As being erected to south-eastward of site of old Umbrella Beacon, it has ceased to be a mark (when on with Syriam Pagoda) for the south-east end of the D'Silva Shoal, the mark for which is now Syriam Pagoda on with east side of Umbrella tree.

The new beacon will be referred to in future as North Beacon.

This Notice affects the Admiralty Chart :— Rangoon River and approaches, No. 833 : Also, Bay of Bengal Pilot, 3rd Edition, 1901, page 354.

E. J. Beaumont, Comdr., r.i.m.,
Port Officer of Calcutta

Published for general information.

C. B. Bayley,
Calcutta, *the 5th August 1902.* *Asst. Secy., Marine Department.*

GOVERNMENT OF BENGAL—MARINE DEPARTMENT.

NOTICE TO MARINERS—No. 238.

[First Publication.]

EASTERN ARCHIPELAGO—Timar, north coast.

Brilliant bank—Particulars given.

The British Admiralty has given notice (No. 426 of 1902) that Brilliant bank, Dilhi harbour approach, is of small extent, with a least depth of 13 fathoms over it, and is situated with Dilhi lighthouse bearing S. 19° E., distant 13¼ cables, and Britomart (Fotocama) point N.74° E., or about 6 cables S. 35° W. from its position as shown on the Chart.

Approximate position on Admiralty Chart No. 1460, lat. 8° 30¾′ S., long. 125° 34′ E.

(*Variation 2° Easterly in 1902.*)

This Notice affects the following Admiralty Chart :—Dilhi harbour on Chart No. 1460 : Also, Eastern Archipelago, vol. II, 1893, page 281 ; and Supplement, 1899, page 30.

E. J Beaumont, Comdr , r.i m ,
Port Officer of Calcutta.

Published for general information.

C. B. Bayley,
Calcutta, *the 8th August 1902.* *Asst. Secy., Marine Department,*

GOVERNMENT OF BENGAL—MARINE DEPARTMENT.

NOTICE TO MARINERS—No. 239.

[First Publication.]

EASTERN ARCHIPELAGO—Borneo, south coast.

Barito river—Depth on reef in approach.

The British Admiralty has given notice (No. 428 of 1902) that the depth over the reef situated about 14½ miles S. 12° E from Burung point, Barito river, is 8 feet, and not 2 fathoms, as shown on the Chart.

Approximate position, lat. 3° 48′ S., long. 114° 33′ E.

(*Variation 2° Easterly in 1902.*)

This Notice affects the following Admiralty Chart :—Eastern Archipelago, No. 941b : Also, Eastern Archipelago, part II, 1893, page 207 ; and Supplement, 1899, page 32.

E. J. Beaumont, Comdr., r.i.m ,
Port Officer of Calcutta.

Published for general information.

C. B. Bayley,
Calcutta, *the 8th August 1902.* *Asst. Secy., Marine Department,*

GOVERNMENT OF BENGAL—MARINE DEPARTMENT.

NOTICE TO MARINERS—No. 240.

[First Publication.]

AUSTRALIA—QUEENSLAND, INNER ROUTE.

Lizard island and cape Melville—Particulars of certain shoals.

THE British Admiralty has given notice (No. 438 of 1902) that information, dated 27th April 1902, has been received from Commander C. E. Monro, H. M. Surveying Vessel *Dart*, containing particulars of the undermentioned newly found shoals off Lizard island and cape Melville:—

a. A shoal, with a least depth of 2¾ fathoms, situated with Lizard island bearing S. 6° E., distant 4½ miles.

Approximate position, lat. 14° 35½′ S., long. 145° 27¾′ E.

This shoal is 1½ cables in extent, the bottom in its vicinity is very uneven. As this reef is probably identical with that marked P. D., half a mile to the northward of it, the latter has been erased from the Charts.

b. A shoal, now named Singleton patch, which has a least depth of 5¼ fathoms over it, and is situated with Rocky point bearing S. 5° W., distant 4 miles, and Pipon islands lighthouse N. 72° W. It is about 1½ cables in extent North and South, and has depths of 12 fathoms around it.

c. A shoal, now named Aylen patch, one mile westward of Oswald shoal, with a least depth of 5 fathoms over it at low water springs, and is situated with Pipon islands lighthouse bearing S. 59° E., distant 2¾ miles, and Channel rocks S. 12° E. It is about 3 cables in extent North-east and South-west.

Broomfield rock was unsuccessfully searched for, and has in consequence been expunged from the Charts.

Approximate position, lat. 14° 12¾′ S., long. 144° 37½′ E.

(*Variation 5° Easterly in 1902.*)

This Notice affects the following Admiralty Charts:—Hope islands to Turtle group, No. 2923; Turtle group to Claremont point, No. 2922: Also, Australia Directory, vol. II, 1898, pages 359, 364, 365.

E. J. BEAUMONT, COMDR., R.I.M.,
Port Officer of Calcutta.

Published for general information.

C. B. BAYLEY,
Asst. Secy., Marine Department.

CALCUTTA, *the 8th August 1902.*

GOVERNMENT OF BENGAL—MARINE DEPARTMENT.

NOTICE TO MARINERS—No. 241.

[First Publication.]

PERSIAN GULF, WESTERN SHORE—BAHREIN HARBOUR.

Shoal sounding in approach.

THE British Admiralty has given notice (No. 440 of 1902) that information, dated 13th June 1902, has been received from Mr. T. L. Molony, Master of the S S *Mosafari*, that he obtained a sounding of 3½ fathoms in the position where a depth of 4¾ fathoms is shown on the Chart in the approach to Bahrein harbour, with Ras Rakkin bearing S. 26° E., distant 13 miles.

Approximate position, lat. 26° 23′ N., long. 51° 8′ E.

(*Variation Nil in 1902.*)

This Notice affects the following Admiralty Chart:—Persian gulf, No. 2837b: Also Persian Gulf Pilot, 1898, page 126.

E. J. BEAUMONT, COMDR., R.I.M.,
Port Officer of Calcutta.

Published for general information.

C. B. BAYLEY,
Asst. Secy., Marine Department.

CALCUTTA, *the 8th August 1902.*

GOVERNMENT OF BENGAL—MARINE DEPARTMENT.

NOTICE TO MARINERS—No. 242.

[First Publication.]

AFRICA, CAPE COLONY—TABLE BAY.

Robben island—Fog signal intended.

THE British Admiralty has given notice (No. 443 of 1902) that it is intended in about two months' time to establish at Robben island lighthouse, a fog explosive, which will, during thick or foggy weather, give *one report* every *five minutes*.

Approximate position, lat. 33° 49′ S., long. 18° 22½′ E.

Further Notice will be given when this signal has been established.

This Notice affects the following Admiralty Charts:—Cape Lopez to Cape of Good Hope, No. 1013; Honeklip bay to port Natal, No. 2035; Table bay to Donkin bay, No. 2091; Cape of Good Hope to False bay, No. 636; Table bay to cape Agulhas, No. 2082; Table bay, No. 1920: Also, List of Lights, 1902, part IV, No. 807; part VI, No. 2; and Africa Pilot, part III, 1897, page 57.

E J. BEAUMONT, COMDR., R.I M.,
Port Officer of Calcutta.

Published for general information.

C. B. BAYLEY,
CALCUTTA, *the 8th August 1902.* *Asst. Secy., Marine Department.*

GOVERNMENT OF BENGAL—MARINE DEPARTMENT.

NOTICE TO MARINERS—No. 243.

[First Publication]

AFRICA, SOUTH-EAST, CAPE COLONY—ALGOA BAY, EASTERN APPROACH.

Stalwart point—Shoal water extending from—

THE British Admiralty has given notice (No. 451 of 1902) that the shoal water off Stalwart point extends further from the shore than shown upon the Admiralty Charts.

As this report agrees with information already received, the shoal bank on the Chart has been extended to a distance of eight-tenths of a mile from the high-water line.

Approximate position, lat. 33° 28′ S, long. 27° 14′ E.

(*Variation 29° Westerly in 1902.*)

This Notice affects the following Admiralty Charts:—Waterloo bay to Bashee river, No. 2086; cape St. Francis to Waterloo bay, No. 2085: Also, Africa Pilot, part III, 1897, page 143.

E. J. BEAUMONT, COMDR., R.I M.,
Port Officer of Calcutta.

Published for general information.

C. B. BAYLEY,
CALCUTTA, *the 8th August 1902.* *Asst. Secy., Marine Department.*

GOVERNMENT OF BENGAL—MARINE DEPARTMENT.

NOTICE TO MARINERS—No. 227.

[Second Publication.]

BAY OF BENGAL—COROMANDEL COAST.

Mahabalipuram light—Incorrectly shown on certain charts.

THE British Admiralty has given notice (No. 411 of 1902) that on certain copies of Admiralty Chart No. 575, Mahabalipuram light is shown as a red fixed light instead of a *white group flashing* light, showing groups of *three flashes* every *ten seconds*, as described in the Admiralty List of Lights, part VI, 1902, No. 323.

Approximate position, lat. 12° 36¾′ N., long. 80° 11½′ E.

E. J. BEAUMONT, COMDR., R.I.M.,
Port Officer of Calcutta.

Published for general information.

C. B. BAYLEY,
CALCUTTA, *the 28th July 1902.* *Asst. Secy., Marine Department.*

GOVERNMENT OF BENGAL—MARINE DEPARTMENT.

NOTICE TO MARINERS—No. 228.

[Second Publication.]

AUSTRALIA—QUEENSLAND.

Port Curtis—North Channel closed—Marks removed.

THE British Admiralty has given notice (No. 412 of 1902) that in consequence of the decreasing depth at the inner end of the North channel into port Curtis it is no longer safe for ordinary navigation, and its use in future must be confined during daylight to small local coasting vessels.

Also, that, on 10th May 1902, all the marks and lights used in navigating the North channel would be discontinued.

These would probably be the black buoy situated at a distance of 14 cables S. 84° E. from East point light, the red buoy situated 1¾ cables S. 40° E. from Settlement point, Oyster rock light, and the light-buoy, exhibiting a white fixed light, situated about 3 cables S. 24° W. from Oyster rock light.

Approximate position, Oyster rock, lat. 23° 53′ S., long. 151° 22¾′ E.

(*Variation 8° Easterly in 1902.*)

This Notice affects the following Admiralty Charts:—Port Curtis, No. 1900: Also, List of Lights, part VI, 1902, No. 1267; and Australia Directory, vol. II, 1898, pages 180, 181, 182, 185.

E. J. BEAUMONT, COMDR., R.I.M.,
Port Officer of Calcutta.

Published for general information.

C. B. BAYLEY,
CALCUTTA, *the 28th July 1902.* *Asst. Secy., Marine Department.*

GOVERNMENT OF BENGAL—MARINE DEPARTMENT.

NOTICE TO MARINERS—No. 229.

[Second Publication.]

KOREA—SOUTH COAST.

Willes gulf anchorage—Rock in approach.

THE British Admiralty has given notice (No. 413 of 1902) of the existence of a rock about one cable in extent, with a depth of three-quarters of a fathom over it, situated in the approach to the anchorage in Willes gulf, in lat. 34° 52′ 55″ S., long. 127° 45′ 40″ E.

This Notice affects the following Admiralty Chart:—Korean archipelago, No. 104: Also, China Sea Directory, vol. IV, 1894, page 112.

E. J. BEAUMONT, COMDR., R.I.M.,
Port Officer of Calcutta.

Published for general information.

C. B. BAYLEY,
CALCUTTA, *the 28th July 1902.* *Asst. Secy., Marine Department.*

GOVERNMENT OF BENGAL—MARINE DEPARTMENT.

NOTICE TO MARINERS—No. 230.

[Second Publication.]

AUSTRALIA, SOUTH—LACEPEDE BAY.

Beacon erected.

THE British Admiralty has given notice (No. 414 of 1902) that a triangular beacon with circular head, painted white, has been erected on the coast line about 5 miles to the south-westward of Kingston jetty to indicate the best holding ground in Lacepede bay. Vessels should anchor with this beacon bearing S.E. according to draught.

Approximate position, lat. 36° 54¼′ S., long. 139° 47¼′ E.

(*Variation 6° Easterly in 1902.*)

This Notice affects the following Admiralty Chart:—Lacepede bay on Chart No. 1006: Also, Australia Directory, vol. I, 1897, page 361.

E. J. BEAUMONT, COMDR., R.I.M.,
Port Officer of Calcutta.

Published for general information.

C. B. BAYLEY,
CALCUTTA, *the 28th July 1902.* *Asst. Secy., Marine Department.*

GOVERNMENT OF BENGAL—MARINE DEPARTMENT.

NOTICE TO MARINERS—No. 231.

[Second Publication.]

JAPAN—KIUSIU, NORTH COAST.

Spex strait approach—Particulars and positions of sunken rocks named Takose and Nakazone.

THE British Admiralty has given notice (No. 418 of 1902) of the existence of the undermentioned rocks to the southward of Atsusi no o sima in the approach to Spex strait:—

a. A rock named Takose, with a depth of 2¼ fathoms over it, situated with the northern extremity of Do sima bearing S. 79 W., distant 17 cables, and Kassa yama ⛰ N. 24° W.

Approximate position, lat. 33° 27¾′ N., long. 129° 33¾′ E.

b. A rock named Nakazone, with a depth of 4¼ fathoms over it, situated at a distance of 2½ cables N. 31° E. from the above.

(*Variation 4° Westerly in 1902.*)

This Notice affects the following Admiralty Charts:—Western coast of Kiusiu, &c., No. 358; Nagasaki to Karatsu, No. 359: Hirado no seto to Simonoseki strait, No. 127; Matsu sima to Atsusi no o sima, No. 140: Also, China Sea Directory, vol. IV, 1894, page 522.

E. J. BEAUMONT, COMDR., R.I.M.,
Port Officer of Calcutta.

Published for general information.

C. B. BAYLEY,
Asst. Secy., Marine Department.

CALCUTTA, *the 28th July 1902.*

GOVERNMENT OF BENGAL—MARINE DEPARTMENT.

NOTICE TO MARINERS—No. 232.

[Second Publication.]

AUSTRALIA, SOUTH—PORT ADELAIDE.

Wonga shoal—A gong to be sounded at the light-house.

THE President, Marine Board, Port Adelaide, has given notice (No. 10 of 1902) that during the prevalence of fog or mist a Gong will be sounded at the above-named light-house for a period of thirty (30) seconds in duration and at intervals of five (5) minutes.

The sound will be audible in ordinary weather for a distance of about three (3) miles.

This affects Admiralty Plans 1750 and 1752.

E. J. BEAUMONT, COMDR., R.I.M.,
Port Officer of Calcutta.

Published for general information.

C. B. BAYLEY,
Asst. Secy., Marine Department.

CALCUTTA, *the 28th July 1902.*

GOVERNMENT OF BENGAL—MARINE DEPARTMENT.

NOTICE TO MARINERS—No. 233.

[Second Publication.]

AUSTRALIA, SOUTH—SPENCER GULF.

Port Pirie approach—Occulting light from a beacon to be erected on the north end of Eastern Shoal.

THE President, Marine Board, Port Adelaide, has given notice (No. 11 of 1902) informing Masters of Vessels, Pilots, and others that it is proposed to exhibit, on or about the 1st August next, an Occulting Light from a Beacon to be erected on the North end of Eastern Shoal, and are advised that during the progress of the work, which may be commenced at any time, an ordinary Riding Light will be shown from a vessel moored in the vicinity.

A further notice will be issued giving full particulars at an early date.

This affects Admiralty Chart No. 2389b and Plan 403.

E. J. BEAUMONT, COMDR., R.I.M.,
Port Officer of Calcutta.

Published for general information.

C. B BAYLEY,
Asst. Secy., Marine Department.

CALCUTTA, *the 28th July 1902.*

GOVERNMENT OF BENGAL—MARINE DEPARTMENT.

NOTICE TO MARINERS—No 234.

[Second Publication.]

INDIA, WEST—Bombay coast.

Bombay harbour—Temporary removal of the Outer light-vessel.

The Bombay Government has given notice (No. 87 of 1902) that the Light-Vessel *Bombay* will be brought in for docking, examination and repairs on the 15th October 1902. During the period she is off her station a Pilot Schooner, anchored in the Light-Vessel's position, will exhibit, in addition to her Anchor Light, two steamer's Masthead Lights, lashed back to back and suspended on a stay between the masts at a height of 56 feet above the water line.

N.B.—In day light, the *Red flag* will be hoisted when a vessel is seen as usual; and the *Blue lights* and *torches* will continue to be burnt as at present.

E. J. Beaumont, Comdr., r.i.m.,
Port Officer of Calcutta.

Published for general information.

C. B. Bayley,
Calcutta, *the 28th July 1902.* *Asst. Secy., Marine Department.*

GOVERNMENT OF BENGAL—MARINE DEPARTMENT.

NOTICE TO MARINERS—No. 219.

[Third Publication.]

BAY OF BENGAL—Burma coast.

Caution—Exact position of the reported wreck.

With reference to Notice to Mariners No. 163, dated the 5th June last, issued by this office, a further telegraphic communication has been received from the Principal Port Officer, Burma, stating that a green buoy with pole and basket marked W has been laid S. 26° E. (true) distant 4 cables from the wreck in 18 fathoms at low water. The position of the wreck is Lat. 15° 27′ 45″ N., Long. 94° 45′ E. Mariners are accordingly warned.

E. J. Beaumont, Comdr., r.i.m.,
Port Officer of Calcutta.

Published for general information.

C. B. Bayley,
Calcutta, *the 22nd July 1902.* *Asst. Secy., Marine Department.*

GOVERNMENT OF BENGAL—MARINE DEPARTMENT.

NOTICE TO MARINERS—No. 220.

[Third Publication.]

BAY OF BENGAL—Andaman islands.

North Brother—Shoal reported to the north-eastward.

The British Admiralty has given notice (No. 389 of 1902) that the R.I.M.S. *Elphinstone* reports having passed over a shoal patch on 14th March 1902 in approximately lat 11° 1′ 15″ N., long. 92° 41′ E., with North Brother island bearing S. 40° W., distant 2¾ miles.

The shoal appeared to be in the shape of a crescent extending in a westerly and south-westerly direction. The least depth obtained was 5 fathoms, sand.

(*Variation 1° Easterly in 1902.*)

This Notice affects the following Admiralty Charts:—Andaman islands, No. 825; Port Blair to Little Andaman island, No. 1398: Also, Bay of Bengal Pilot, 1901, page 303.

E. J. Beaumont, Comdr., r.i.m.,
Port Officer of Calcutta.

Published for general information.

C. B. Bayley,
Calcutta, *the 26th July 1902.* *Asst. Secy., Marine Department.*

GOVERNMENT OF BENGAL—MARINE DEPARTMENT.

NOTICE TO MARINERS—No. 221.

[Third Publication.]

EASTERN ARCHIPELAGO—SUMATRA, WEST COAST.

Stort reef—Its position—Marion reef—Its non-existence.

THE British Admiralty has given notice (No. 392 of 1902) that a recent survey shows the position of the Stort reef to be as follows:—

(*a*) Stort reef, on which there is a depth of 3½ fathoms, is about three-quarters of a mile long N. by E. and S. by W. Its south-eastern part is situated with Pulo Pië bearing N. 69° E., distant 6½ miles, and Pulo Bando, N. 1° W., or about 3 cables south of the position shown on the Chart. The south-eastern side of the reef is steep-to.

Approximate position, lat. 0° 54½′ S., long. 99° 59½′ E.

(*b*) A sounding of 50 fathoms, no bottom, was obtained in the reported position of Marion reef under conditions so favourable that the discoloration of the water over Stort reef, distant 1¾ miles to the westward, could clearly be traced, no sign however of the Marion reef could be seen, and it is assumed that the vessel reporting it saw the Stort reef. This reef has therefore been expunged from the Chart.

Approximate position, lat. 0° 54′ S., long. 100° 1½′ E.

(*Variation Nil in 1902.*)

This Notice affects the following Admiralty Charts:—Acheh head to Tyinkok bay, No 2760; Ujong Masang to Ujong Indrapura, No. 709: Also, China Sea Directory, vol. I, 1896, page 296.

E. J. BEAUMONT, COMDR., R.I.M.,
Port Officer of Calcutta.

Published for general information.

C. B. BAYLEY,
Asst. Secy., Marine Department.

CALCUTTA, *the 26th July 1902.*

GOVERNMENT OF BENGAL—MARINE DEPARTMENT.

NOTICE TO MARINERS—No. 222.

[Third Publication.]

EASTERN ARCHIPELAGO—SUMATRA, WEST COAST.

Pulo Lakotta—Non-existence of coral patch to the eastward.

THE British Admiralty has given notice (No. 393 of 1902) that a sounding of 28 fathoms has been obtained by the Netherlands Government S.S. *Condor* in a position from which Pulo Lakotta bore S. 62° W., distant 7½ miles, and Pulo Panjang N. 11° E.; and that no trace was seen of the coral patch shown on Chart No. 2760 in that position. This danger has accordingly been expunged from the Admiralty Charts.

Approximate position on Chart No. 2760, lat. 1° 54½′ N., long. 98° 6′ E.

(*Variation 2° Easterly in 1902.*)

This Notice affects the following Admiralty Chart:—Acheh head to Tyinkok bay, No. 2760: Also, China Sea Directory, vol. I, 1896, page 283.

E. J. BEAUMONT, COMDR., R.I.M.,
Port Officer of Calcutta.

Published for general information.

C. B. BAYLEY,
Asst. Secy., Marine Department.

CALCUTTA, *the 26th July 1902.*

GOVERNMENT OF BENGAL—MARINE DEPARTMENT.

NOTICE TO MARINERS—No. 223.

[Third Publication.]

AFRICA, NORTH-EAST—RED SEA, WESTERN SHORE.

South Massawa channel—Reef in approach.

THE British Admiralty has given notice (No. 395 of 1902) that information has been received from the Master of the British S.S. *Neghileh* that at 6-45 P.M. on 24th March 1902 his vessel, drawing 9 feet of water, in clear calm weather struck on a reef south-eastward of Mojeidi island in the eastern approach to South Massawa channel.

Approximate position by star observations taken at the time, lat. 15° 22½′ N., long. 41° 4′ E.

This Notice affects the following Admiralty Chart:—Red Sea, Nos. 2523, 8d: Also, Red Sea, &c., Pilot, 1900, page 208.

E. J. BEAUMONT, COMDR., R.I.M.,
Port Officer of Calcutta.

Published for general information.

C. B. BAYLEY,
Asst. Secy., Marine Department.

CALCUTTA, *the 26th July 1902.*

GOVERNMENT OF BENGAL—MARINE DEPARTMENT.

NOTICE TO MARINERS—No. 224.

[Third Publication.]

AFRICA, NORTH-EAST—RED SEA, EASTERN SHORE.

Jidda—Wreck in inner anchorage.

THE British Admiralty has given notice (No. 399 of 1902) that information, dated 6th June 1902, has been received from the Board of Trade, that the wreck of the S.S. *Alexander III* lies sunk in the inner anchorage, Jidda. From it the white beacon on Abu Harit bears S. 67° W., distant 4$\frac{1}{10}$ cables, and the house on Bahri N. 66° W.

Approximate position, lat. 21° 28′ N., long. 39° 10½′ E.

(*Variation 3° Westerly in 1902.*)

This Notice affects the following Admiralty Chart:—Jidda, No. 2599: Also, Red Sea, &c., Pilot, 1900, pages 270, 275.

E. J. BEAUMONT, COMDR., R.I.M.,
Port Officer of Calcutta.

Published for general information.

C. B. BAYLEY,
Asst. Secy., Marine Department

CALCUTTA, *the 26th July 1902.*

GOVERNMENT OF BENGAL—MARINE DEPARTMENT.

NOTICE TO MARINERS—No. 225.

[Third Publication.]

NEW ZEALAND—NORTH ISLAND, EAST COAST.

Doubtless bay—Prohibited anchorage.

THE British Admiralty has given notice (No. 401 of 1902) that anchorage in the vicinity of the telegraph cable in Doubtless bay is prohibited.

The anchorage area within which the cable lies is contained between a line drawn from Coal bay to Knuckle point on the east, and an imaginary line drawn N. 45° W. from river Taipa entrance on the west.

Four small beacons will shortly be erected to mark the lines of direction which the cable takes to enable vessels to keep clear of it.

Approximate position, Coal bay, lat. 35° 1′ S., long. 173° 32′ E.

(*Variation 15° Easterly in 1902.*)

This Notice affects the following Admiralty Chart:—Hokianga to Tukukaka, No. 2525: Also, New Zealand Pilot, 1901, page 69.

E. J. BEAUMONT, COMDR., R.I.M.,
Port Officer of Calcutta.

Published for general information.

C. B. BAYLEY,
Asst. Secy., Marine Department.

CALCUTTA, *the 26th July 1902.*

GOVERNMENT OF BENGAL—MARINE DEPARTMENT.

NOTICE TO MARINERS—No. 826.

[Third Publication.]

CHINA, SOUTH-EAST COAST—MIRS BAY.

Rock.

THE British Admiralty has given notice (No. 407 of 1902) of the existence of a rock in Mirs bay, with a depth over it of 1½ fathoms at low water springs, situated with the eastern extremity of North Gau bearing N. 43° W., distant 3 cables, and south-eastern extremity of Grass island S. 41° W.

This rock is steep-to on the eastern side, the 10-fathom contour line extending a distance of one cable to the north-eastward, half a cable to the eastward, and 1½ cables to the south-eastward.

Approximate position, lat. 22° 29′ N., long. 114° 22¾′ E.

(*Variation 1° Easterly in 1902.*)

This Notice affects the following Admiralty Charts :—Macao to Pedro Bianco, No. 3026; Hong Kong to the Brothers, No. 1962; Mirs bay, No. 1964 : Also, China Sea Directory, vol. III, 1894, page 126; and Supplement, 1898, page 14.

E. J. BEAUMONT, COMDR., R.I.M.,
Port Officer of Calcutta.

Published for general information.

C B. BAYLEY,
Asst. Secy., Marine Department.

CALCUTTA, *the 26th July 1902.*

REGISTERED No., C209.]

No. 33 of 1902.

SUPPLEMENT TO

The Calcutta Gazette.

WEDNESDAY, AUGUST 13, 1902.

OFFICIAL PAPERS.

[*Non-Subscribers to the* GAZETTE *may receive the* SUPPLEMENT *separately on payment of five rupees per annum if delivered in Calcutta, or seven rupees and eight annas if sent by post.*]

CONTENTS.

	Page
RESOLUTION on the Annual Report of the Civil Veterinary Department, Bengal, and of the Bengal Veterinary College	1145
Liberality of Mahanta Sumeru Giri Gossain, of Mahgunge	1147
Weather and Crop Report for the week ending the 11th August 1902	1148
Circular and Eastern Canal for the week ending Saturday the 9th August 1902	1152
ABSTRACT of the Results of Meteorological Observations taken at the Alipore Observatory in the month of July 1902	1153
Results of the Meteorological Observations taken at the Alipore Observatory from 3rd to 9th August 1902 ...	1154
Weekly Return of Traffic Receipts on Indian Railways ..	1155

RESOLUTION ON THE ANNUAL REPORT OF THE CIVIL VETERINARY DEPARTMENT, BENGAL, AND OF THE BENGAL VETERINARY COLLEGE.

REVENUE DEPARTMENT—AGRICULTURE.

Calcutta, the 11th August 1902.

RESOLUTION—No. 3122.

READ—

The Annual Report of the Civil Veterinary Department, Bengal, for the year 1901-1902 and of the Bengal Veterinary College.

Read also—

Letter No. 101T.A., dated 3rd July 1902, from the Director of the Department of Land Records and Agriculture, Bengal, submitting the above report with his remarks.

The Annual Report of the Civil Veterinary Department and of the Bengal Veterinary College has this year been considerably curtailed, and is comprised, together with its appendices, within the prescribed limits of 15 pages.

2. *Veterinary Dispensaries.*—The year under review was marked by an important increase in the number of veterinary dispensaries from twelve to nineteen; and the number of patients treated, viz., 737 in-patients and 8,892 out-patients, was more than double that of the preceding year. The Lieutenant-Governor has read with pleasure the good accounts given of the veterinary dispensaries at Howrah, Gaya, Sitamarhi, Darbhanga, Patna, Balasore, Dumraon, Muzaffarpur, and Chittagong, and he notices that at Monghyr the new dispensary building has been built entirely from funds raised by public subscription.

Government in its Resolution No. 4051, dated 10th December 1901, has undertaken on certain conditions to contribute one-half of the expenses incurred by District Boards in the maintenance of veterinary dispensaries and one-sixth in the case of dispensaries maintained jointly by District Boards and Municipalities. The application from the Cuttack Dispensary for assistance is under consideration.

3. *Epidemic Disease.*—The Government of India in commenting on last year's report expressed the fear that glanders is very rife in Calcutta, and stated that they trusted that measures to check this disease would shortly be brought into force. The figures available support the conclusion that glanders and farcy are prevalent both in Calcutta and in the districts. Altogether at the instance of public officers 51 horses were destroyed on account of this disease last year. It has been reported to the Government of India that the introduction of Act XIII of 1889 into Calcutta in supersession of Act VIII (B. C.) of 1880 will involve an annual expenditure of Rs. 10,000 with a probable increase in the near future, and that therefore on financial grounds its introduction must await the next revision of the Provincial contract.

The year under review showed a marked decrease in reported cattle-disease; but rinderpest was again rife in Birbhum, and there were severe outbreaks in Khulna, Gaya, and Hazaribagh, where the number of cattle attacked exceeded 2,000 in each district. In Murshidabad, Chittagong, Shahabad, Palamau, and Manbhum over 1,000 cases were reported in each district. The Veterinary Assistants were able to immunise 12,829 head of cattle during the year, and could have done more work under this head if more serum had been available. It is satisfactory that there was no friction between the operators and the owners of cattle.

Under recent orders from the Government of India instruction in rinderpest inoculation will in future be imparted to veterinary assistants at Muktesar and Bareilly. It has accordingly been arranged to send this year four assistants monthly for instruction until 24 have been trained.

4. *Improvement of stock.*— It is trusted that the attempt made by the importation by the Civil Veterinary Department and by the District Board of Patna of Australian cows and bulls to improve the Patna breed of milch cattle may be successful. Of the animals imported by the Veterinary Department, two unfortunately died soon after their arrival.

5. *The Veterinary College.*—The session opened with 47 students in the three classes, of whom 5 were Muhammadans. Withdrawal and removal reduced the total number to 35. The results of the examination at the end of the year were creditable both to the students and the lecturers. All the students in the three classes held stipends provided either by Government or District Boards and Municipalities or private individuals. Since the close of the year the rules for admission to the College have been revised, and the curriculum of studies modified on the lines suggested by the Umballa Veterinary Conference of 1900.

6. *The Belgachia Infirmary.*—There was a decrease in the number of in-patients and out-patients in the Belgachia Infirmary, which has not been explained either by the Superintendent or by the Director of Land Records. The fees for admission have, however, been recently reduced in the case of horses and ponies belonging to persons of small means and hackney-carriage drivers, and the fee charged to cartmen, *goalas*, and pack-bullock drivers for the treatment of their cattle has been reduced by one-half. This should improve the use of the institution.

7. *Financial.*—The cost of maintaining the Department exceeded that of last year by about Rs. 11,000. This was chiefly due to increased establishment, increased travelling of the Inspectors, increased rent of land, charges on account of fencing the College grounds, and purchase of models and specimens.

8. The Lieutenant-Governor has pleasure in acknowledging the zeal and success with which Veterinary Major Raymond managed the Department during the year.

By order of the Lieutenant-Governor of Bengal,

W. C. MACPHERSON,

Offg. Secretary to the Govt. of Bengal.

LIBERALITY OF MAHANTA SUMERU GIRI GOSSAIN, OF MAHIGUNGE.

No. 2197Medl., dated Calcutta, the 11th August 1902.

From—E. W. Collin, Esq., Offg. Secy. to the Govt. of Bengal, Municipal Dept.,

To—The Commissioner of the Rajshahi Division.

With reference to your endorsements noted in the margin, forwarding copies of the letters from the Magistrate of Rangpur, in which he reports that Mahanta Sumeru Giri Gossain, of Mahigunge, has given the sum of Rs. 3,000, to be spent on constructing a pauper ward for the new dispensary at Nowabgunge, in the town of Rangpur, I am directed to request that you will be so good as to convey the thanks of Government to the donor for his public spirit and liberality.

No. 628, dated 27th February 1902.
„ 364J.Ct., dated 17th June „
„ 496J.Ct., dated 14th July „
„ 187J., dated 28th July „

2. This letter will be published in the *Calcutta Gazette*.

WEATHER AND CROP REPORT.

For the week ending on the 11th August 1902.

Burdwan.—Rainfall at Sadar 1·27, Kalna 0·29, Katwa 0·10, Raniganj 0 97. Weather cloudy. Transplantation going on. Fodder and water sufficient. No cattle-disease. Common rice sells at 11 seers per rupee.

Birbhum.—Rainfall at Sadar 2·94, Rampur Hât 3·52. Transplantation going on. Sugarcane promising. Weather cloudy and raining. Fodder sufficient. Common rice sells at 12 seers per rupee.

Bankura.—Rainfall at Sadar ·61. More rain wanted. Transplantation going on. Weather hot and cloudy. Sugarcane doing well. Fodder and water sufficient. Common rice sells at 12 seers per rupee.

Midnapore.—Rainfall at Sadar 2·63, Contai 2·17, Tamluk 3·08, Ghatal 1·41. Weather hot and raining. Transplantation of *aman* continues. Agricultural prospects good. Fodder and water sufficient. Cattle-disease reported from Binpur. Common rice sells as follows:—

	Srs.	ch.	
Sadar	12	0	per rupee.
Contai	11	14	
Tamluk	11	12	
Ghatal	12	0	

Hooghly.—Rainfall at Sadar 0·77, Serampore 1·26, Arambagh 0·34. Transplantation of *aman* continues. Fodder and water sufficient. Common rice sells as follows:—

	Srs.	ch.	
Sadar	10	0	per rupee
Serampore	10	5	
Arambagh	11	12	

Howrah.—Rainfall at Sadar 2·64, Ulubaria 2·48. Fall recorded on all days of the week except on 6th at Ulubaria, the 5th to 7th at Sadar. The rain has done no harm. Transplantation of *aman* going on briskly. Agricultural prospects hopeful. Fodder and water-supply sufficient. Common rice sells at both Sadar and Ulubaria at 11 seers per rupee.

24-Parganas.—Rainfall at Sadar 2·97, Barasat 4·69, Basirhat 1·11, Diamond Harbour 1·76. Weather seasonable. State of standing crops good, but more rain still wanted. Prospects fair. *Aus* and jute being harvested. Transplantation of *aman* continues. Common rice sells at 11½ seers per rupee; at 10½ seers in Diamond Harbour. A few cases of cattle-disease reported from Basirhat. Supply of fodder and water sufficient.

Nadia.—Rainfall at Sadar 2·70, Ranaghat 0·75, Meherpur 2·20, Chuadanga 1·44, Kushtia 0·71. Harvesting of *aus* paddy and transplantation of *aman* paddy going on. Jute being steeped. Fodder and drinking water sufficient. No cattle-disease reported. Common rice sells as follows:—

	Srs.	ch.	
Sadar	12	0	per rupee.
Ranaghat	11	0	
Chuadanga ... Report not received			
Meherpur	10	8	
Kushtia	11	4	

Murshidabad.—Rainfall at Sadar 1·06, Kandi 1·87, Jangipur 2·29, Lalbagh 0·39. Weather seasonable. Transplantation of *aman* going on vigorously. Harvesting of *bhadoi* going on. Jute being cut and steeped in Jangipur. Small-pox among cattle reported from Raghunathganj. Fodder and water sufficient. Common rice sells as follows:—

	Srs.	ch.	
Sadar	12	0	per rupee.
Kandi	12	0	
Jangipur	11	8	
Lalbagh	11	0	

Jessore.—Rainfall at Sadar 2·56, Jhenida 0 19, Magura 0 47, Narail 1 12, Bangaon 0·52. Weather seasonable. Prospects of crops generally fair, but more rain wanted. Fodder and water sufficient. Cattle-disease reported from Kotwali, Jhenida and Salikia outpost of Magura. Common rice sells at 12 seers a rupee.

Khulna.—Rainfall at Sadar 4·38, Bagerhat 0·83, Satkhira 1·11. Weather seasonable. Transplantation of *aman* and harvesting of *aus* continue. Fodder and water sufficient. Cattle-disease reported from Paikgachha, Fakirhat and Asasuni. Common rice sells as follows:—

	Srs. ch.	
Sadar	11 4	per rupee
Bagerhat	12 0	
Satkhira	10 8	

Rajshahi.—Rainfall at Sadar 1·02, Nator 2·62, Naugaon 0·73. Weather seasonable. Harvesting of *aus* and jute continues. Transplantation of winter rice in progress. Prospects of crops good. Common rice selling at 12 seers per rupee.

Dinajpur.—Rainfall at Sadar 1·11. Fall in the district general, varying from 1·11 to 5·36. Weather seasonable. Steeping of jute and transplantation of winter rice are in full swing. *Bhadoi* doing well. No cattle-disease. Fodder and drinking-water plentiful. Rice selling at 12 seers per rupee.

Jalpaiguri.—Rainfall at Sadar 2·04, Alipore Duars 5·13. Weather cloudy and hot with occasional showers. Harvesting of *bhadoi* and transplantation of *haimanti* paddy continue. Prospect favourable. Common rice sells at 11¼ seers a rupee. Fodder and water sufficient. Cattle-disease reported from two thanas.

Darjeeling.—Rainfall at Darjeeling 10·96, Kurseong 6·49, Siliguri 1·61, Kalimpong 1·51. Weather seasonable. *Hills—Haimanti dhan* being cultivated. Maize, *chota marua* and *bhadoi dhan* doing well. *Terai—Haimanti* paddy being transplanted. Prospects good. Coarse rice sells as follows:—

	Srs. ch.	
Hills	8 0	per rupee.
Terai	11 0	

Maize sells at Darjeeling at 18 and at Kalimpong at 20 seers per rupee.

Rangpur.—Rainfall at Sadar 2·66. Fall general. Weather cloudy and rainy. Cutting of *aus* and jute and transplantation of *aman* going on. Jute on low lands a little damaged at Nilphamari by rain. Common rice sells at 11 seers per rupee.

Bogra.—Rainfall at Sadar 2·67. Fall general. Weather hot and cloudy. Cutting of *aus* and jute and transplanting of *aman* going on. Prospects fair. Fodder and water, sufficient. Common rice sells at 12 seers per rupee.

Pabna.—Rainfall at Sadar 4·12. Fall general in Sadar. Weather cloudy and rainy. Reaping of *aus* and jute over. Prospects of standing crops fair. Fodder and water sufficient. No cattle-disease. Common rice sells at 10 seers per rupee.

Dacca.—Rainfall at Sadar ·75, Manikganj 4·08, Munshiganj 4·22, Narayanganj 2·33. Prospects of crops fair. Weather seasonable. Fodder available. No cattle-disease. Common rice sells at 11 seers per rupee.

Mymensingh.—Rainfall at Sadar 10·99, Jamalpur 1·74, Kishorganj 1·68, Netrokona 2·32, Tangail 1·36. Weather seasonable. Harvesting of *aus* and jute continues. Transplantation of *aman* rice in progress. Fodder and water sufficient. No cattle-disease. Common rice selling as follows:—

	Srs. ch.	
Sadar	10 0	per rupee.
Kishorganj	10 11	
Jamalpur	12 0	
Netrokona	12 3	
Tangail	10 4	

Faridpur.—Rainfall at Sadar 3·81, Goalundo 4·37, Madaripur 1·43. Weather very wet. State and prospects of standing crops good. Fodder sufficient. No cattle-disease. Common rice selling at 1¼ seers per rupee.

Backergunge.—Rainfall at Sadar 5·02 Fall general, lightest at Patuakhali, 1·75. Weather rainy. Transplantation of *aman* continues. Cattle-disease at Rajapur outpost and Matbari thana. Fodder and water sufficient. Common rice sells at 11 seers (*aman*) and 13¼ seers (*aus*) per rupee.

Tippera.—Rainfall at Sadar 4·43, Brahmanbaria 1·37, Chandpur 2·02. Weather seasonable. Reaping of *aus* paddy nearly finished in Chandpur. Transplantation of *aman* going on. Fodder and water sufficient. No cattle-disease. Common rice sells at 12 seers per rupee.

Noakhali.—Rainfall at Sadar 9·92, Feni 9·10. Fall general. Weather seasonable. Transplantation of *aman* continues. Prospects of *aus* fair. Fodder fair. Water sufficient. Common rice sells at Sadar at 11 seers and at Feni at 14 seers per rupee.

Chittagong.—Rainfall at Sadar 9·61, Cox's Bazar 4·62. Transplantation of *aman* crops going on. Water and fodder sufficient. Cattle-disease still reported in parts of the district. Rice sells at 12¾ seers per rupee.

Chittagong Hill Tracts.—Rainfall at Sadar 3·28. Fall general. Weather fair till 10th. *Aus* paddy doing well. Maize bad owing to heavy rain. Transplantation of winter rice going on. Common rice selling at 11 seers per rupee. No cattle-disease.

Patna.—Rainfall at Sadar 4·40, Barh 0·55, Bihar 1·67, Dinapore 5·08, Hilsa 1·75, Bikram 0·81. Weather cloudy. More rain wanted. Paddy transplantation going on. *Bhadoi* has suffered a good deal. No cattle-disease. Fodder and water sufficient. Common rice sells as follows:—

	Srs.	ch.	
Patna	11	0	per rupee.
Barh	11	8	
Bihar	10	0	
Dinapore	11	12	

Gaya.—Rainfall at Sadar 1·29, Nawadah 1·4, Jahanabad 3·07, Aurangabad 3·78, Weather seasonable. Transplantation of paddy continues. Sugarcane and *bhadoi* doing well. No cattle-disease. Fodder and water ample. Average price of common rice is 10 seers 14 chitaks per rupee.

Shahabad.—Rainfall at Sadar 2·12, Buxar 5·18, Bhabhua 3·60, Sasaram 2·62, Dehri 2·68. Weather seasonable. Paddy being transplanted. *Bhadoi* and sugarcane doing well. Fodder and water sufficient. No cattle-disease. Rice sells at Sadar at 11 seers a rupee.

Saran.—Rainfall at Sadar 1·04, Siwan 2·71, Gopalganj 4·26. Weather seasonable. Standing crops doing well and transplantation of paddy continues. Cattle-disease reported from one village at Sonpur. Fodder and water sufficient. Common rice sells at 13 seers per rupee.

Champaran.—Rainfall at Sadar 2·31, Bettiah 3·52. Weather rainy and cloudy. Transplantation of *aghani* paddy and weeding of *bhadoi* crops going on. Prospects of standing crops very good. Cattle-disease reported. Fodder and water sufficient. Common rice sells at 14 seers and maize at 22 seers per rupee.

Muzaffarpur.—Rainfall at Sadar 3·15, Hajipur 2.07, Sitamarhi 2·07. Weather cloudy occasionally. Transplantation of paddy still going on. Prospects of crops good. Fodder and water sufficient. Very few cases of cattle-disease in Sitamarhi subdivision. Prices are—Common rice 11½ seers and maize 20½ seers a rupee.

Darbhanga.—Rainfall at Sadar 1·10, Samastipur 5·90, Madhubani 0·98. Weather hot and cloudy. Transplantation of paddy in progress. Prospects of standing crops good. Harvesting of *marua* and *makai* in progress. Fodder and water sufficient. Cattle-disease is reported from Warisnagar, Tajpore, Phulparas, Singhia and Darbhanga police-stations. Common rice sells as follows:—

	Srs.	ch.	
Sadar	12	0	per rupee.
Samastipur	12	8	
Madhubani	11	11	

Monghyr.—Rainfall at Sadar 2·64, Begusarai 3·02, Jamui 3·50. Weather seasonable. Transplantation of paddy going on. *Bhadoi* crops progressing. Prospects of standing crops good. Fodder and water sufficient. No cattle-disease. Common rice sells as follows:—

	Srs.	ch.	
Sadar	10	13	per rupee.
Begusarai	11	0	
Jamui	11	0	

Bhagalpur.—Rainfall at Sadar 2·21, Banka 2·05, Madhipura 2·12, Supaul 1·83. Weather seasonable. Transplantation of winter crops continues. More rain wanted on the eastern side of Banka subdivision. Harvesting of *marua* commenced in Madhipura and Supaul subdivisions. The outturn in Supaul will not be more than 75 per cent. Sporadic cases of cattle-disease reported. Fodder and water sufficient. Common rice sells as follows:—

	Srs.	ch.	
Sadar	11	6	per rupee.
Banka	11	14	
Madhipura	13	0	
Supaul	13	8	

Purnea.—Rainfall at Sadar 6·65, Kishanganj 3·03, Araria 3·74. Fall general. Prospect of standing crops good. *Bhadoi dhan* and jute are being harvested. Transplantation of *aghani* progressing. No cattle-disease. Fodder and water sufficient. Common rice sells as follows:—

		Srs.	ch.	
Sadar	...	10	8	per rupee
Kishanganj	...	11	8	
Araria	...	13	0	

Malda.—Rainfall at Sadar 1·60, Chanchal 4·50, Gajol 1·20. Weather hot and cloudy with occasional rain. Harvesting of *bhadoi* is going on. Transplantation of winter rice in progress. Cutting of jute commenced. No cattle-disease. Fodder and water sufficient except in parts of Old Malda thana. Common rice sells at 12 seers per rupee.

Sonthal Parganas.—Rainfall at Sadar 1·11, Deoghur 0·59, Godda 0·38, Jamtara 3·23. Rajmahal 1·67. Weather hot and cloudy with occasional light showers. Paddy transplantation still going on. Prospects of *bhadoi* favourable. Fodder and water ample. Rice sells at 11¾ seers in Sadar. Pakaur report not received.

Cuttack.—Rainfall at Sadar 1·13. Fall general and more copious in all other parts. Weather hot and cloudy. Transplantation and reploughing of *sarad* going on. *Beali* in ears. Prospects fair. No cattle-disease. Fodder and water sufficient. Common rice sells at 13 seers 2 chitaks per rupee at Sadar.

Balasore.—Rainfall at Sadar 0·55. Fall general. Transplantation and weeding continues. Prospect good. Sugarcane, oilseeds, jute and cotton thriving. Rice sells at 13 and 14 seers per rupee at Sadar and Bhadrak respectively. Fodder and water ample. Floods in parts of Chandbally.

Angul.—Rainfall at Sadar 1·16, Chhendipada 2·65, Bissipara 2·21. Weather cloudy with occasional showers. Transplantation and puddling of winter rice continue. Cattle-disease reported from the interior. Common rice sells at 12 and 11¼ seers per rupee at Sadar and Khondmals respectively.

Puri.—Rainfall 2·27; it is general throughout the district and favourable to standing crops. *Bhadoi* paddy and *mundua* in ears. Weeding, puddling and transplantation of winter rice in progress. *Bhadoi* crop expected to be bumper. Other miscellaneous crops doing well. Common rice sells at 14 seers 7 chitaks per rupee.

Hazaribagh.—Rainfall at Sadar 3·05. Fall general. Weather seasonable. Transplantation of paddy going on vigorously. Sugarcane doing well. Fodder and water sufficient. Common rice sells at 11¼ seers per rupee. Giridih return not received.

Ranchi.—Rainfall at Sadar 6·86. Fall general. Weather seasonable. Harvesting of *gundli* and transplantation of paddy in progress. Cattle disease reported from four thanas. Fodder and water plentiful. Common rice sells at 13¼ seers per rupee.

Palamau.—Rainfall at Sadar 2·17. Rainfall general. Sowing of *bhadoi* still continues in places. Transplantation of paddy has commenced in most places. Standing crops are good. Fodder and water sufficient. Rice sells at Sadar at 10 seers 2 chitaks per rupee.

Manbhum.—Rainfall at Sadar 2·34, Gobindpur 0·63. Fall insufficient in Jharia, Topchanchi, Katras, Rajganj, Nirsha and Raghunathpur. Weather seasonable. Prospects of crops on ground good. Transplantation of winter rice continues. Fodder and water sufficient. Cattle-disease not reported. Average price of common rice at Sadar is 12 seers and at Gobindpur 11 seers per rupee.

Chaibassa.—Rainfall 1·89. Transplantation nearly finished. Young paddy promising Average price of rice 13 seers 10 chitaks in the district; at Chaibassa 12 seers per rupee.

General Summary.—The rainfall during the week was general and at places heavy. Bankura, 24-Parganas, Jessore, Patna and parts of Bhagalpur are still in need of more rain. Transplantation of winter rice and harvesting of early rice and jute still continue. Autumn crops and sugarcane promising. Prospects favourable. Cattle-disease reported from 15 districts. Fodder and water generally sufficient. The price of common rice has risen in 8 districts, fallen in 12, and is stationary in the rest (27).

By order of the Lieutenant-Governor of Bengal,

W. C. MACPHERSON,

Offg. Secretary to the Govt. of Bengal.

REVENUE DEPARTMENT,
The 12th August 1902.

GOVERNMENT OF BENGAL, IRRIGATION DEPARTMENT.

Approximate return of traffic on the Circular and Eastern Canals for the week ending Saturday, the 9th August 1902, as compared with the corresponding week of the previous year.

Nature of Cargo	Week ending Saturday, the 9th August 1902.			Week ending Saturday, the 10th August 1901		
	Number of boats.	Weight of cargo.	Tollage.	Number of boats.	Weight of cargo.	Tollage.
		Mds.	Rs		Mds	Rs.
Rice and paddy	369	45,275	583	338	59,275	706
Jute	46	28,100*	280	34	10,080†	128
Firewood	60	31,400	489	75	48,200‡	720
Other articles	578	1,57,740	1,674	547	1,42,662	1,626
Total ...	1,053	2,62,515	3,026	994	2,60,217	3,180

* Weight by canal measurement, 20,997½ maunds.
† Ditto ditto, 10,850 „

Abstract of the Results of Meteorological Observations taken at the Alipore Observatory in the month of July 1902.

	Inches.	Date.	Hour.
The mean pressure of the month	29·530		
The average pressure of July from 24 years' registers ...	29·537		
The highest pressure in the month	29·745	6th	10
The lowest pressure in the month	29·133	15th	16
The range of pressure	0·612		
	Hours.		
The total number of hours of bright sunshine during the month	81·9		
The maximum possible number of hours of sunshine ...	413·1		
	°		
The mean temperature of the month	83·6		
The average temperature of July from 24 years' registers ...	83·5		
The highest temperature in the month	93·4	12th	
The lowest temperature in the month	74·9	30th	
The range of temperature during the month	18·5		
The mean daily range of temperature	9·9		
The greatest range of temperature in one day	17·2	12th	
	Per cent.		
The mean humidity of the month	87		
The average humidity of July from 24 years' registers ...	85		
	Inches.		
The mean vapour tension of the month	1·001		
The average vapour tension of July from 24 years' registers ...	1·002		
The mean cloud proportion of the month	9·15		
The average cloud proportion of July from 25 years' registers	8·02		
	Inches.		
The total rainfall of the month	15·52		
The total rainfall indicated by a Beckley's self-registering rain-gauge (mouth of the gauge about 52 feet above the ground)	13·73		
The average fall of July from 48 years' registers ...	12·84		
The greatest fall in 24 hours	3·39	23rd	
	Days.		
The number of rainy days in the month	16		
The average number of rainy days in July from 24 years' registers	25		
	°		
The mean maximum equilibrium temperature of solar radiation during the month	137·1		
The mean difference of sun and air temperatures	48·6		
The greatest sun temperature	152·9	13th	
The greatest excess of sun over air temperature	62·2	7th	
The mean temperature of the nocturnal radiation thermometer on woollen cloth	76·8		
The mean depression of the nocturnal radiation thermometer below the minimum air temperature at 4 feet above the ground	1·8		
The greatest depression of the nocturnal radiation thermometer below the minimum air temperature	2·9	2nd	
	Miles.		
The mean movement of the wind per day	132·3		
The greatest movement of the wind in one day	271·0	22nd	
The greatest movement of the wind in one hour	17·0	22nd	1 to 2 p.m.

The number of hours with winds from each of the eight points—
N. 15, N.E. 37, E. 57, S.E. 151, S. 220, S.W. 184, W. 39, N.W. 9, Calm 32.

The results of observations at the Alipore Observatory are not rigorously comparable with the registers of past years (at the Park Street Observatory). The barometer is about 3 feet higher at Alipore, and, other things being equal, reads therefore ·003 lower. The diurnal range of temperature is also greater at Alipore, and the mean temperature apparently about 0·6 higher; and, finally, the thermometer which furnished the record of temperature at the Surveyor-General's Office during 20 years and upwards is found to read 0·6 higher than the Kew Standard thermometer, which is the standard of reference at the present Observatory.

G. W. KÜCHLER,

METEOROLOGICAL OFFICE, GOVT. OF INDIA,
Alipore (Calcutta), the 11th August 1902.

for *Meteorological Reporter to the Govt. of India and Director-General of Indian Observatories.*

Results of the Meteorological Observations taken at the Alipore Observatory from 3rd to 9th August 1902.

Month.	Date.	Maximum in sun.	Number of hours of bright sunshine.	Mean pressure barometer at 32° Fahr.	Temperature. Mean.	Maximum.	Range.	Minimum.	Hygrometry. Mean wet bulb.	Vapour tension.	Dew point.	Humidity.	Wind. Prevailing direction.	Miles recorded.	Rain.	Weather.
1902.		°		Inches.	°	°	°	°	°	Inch.	°	%			Inches.	
Aug.	3rd	132·3	0·1	29·619	82·0	87·9	9·9	78·0	79·9	0·993	79·0	91	ESE and calm ...	35	0·24	Chiefly cloudy, o, d, p.
,,	4th	155·7	2·8	·605	83·8	89·5	11·5	78·0	79·8	·964	78·1	83	SSE and calm ...	51	0·11	Chiefly cloudy, o, d.
,,	5th	145·2	5·9	·616	83·9	89·2	11·0	78·2	79·3	·941	77·4	81	WSW, S and S by W.	94	0·04	Partially cloudy, o, d.
,,	6th	150·7	7·7	·600	85·4	91·4	11·9	79·5	80·3	·967	78·2	79	S and SSE ...	84	Nil	Partially cloudy, o.
,,	7th	143·6	2·3	·600	84·8	89·6	9·8	79·8	80·3	·975	78·5	81	S and SSE ...	86	...	Chiefly cloudy, o.
,,	8th	148·2	2·1	·630	84·0	87·3	7·3	80·0	79·7	·957	77·9	82	SE by S and S ...	149	0·14	Chiefly cloudy, o, p.
,,	9th	147·0	3·9	·645	84·4	90·2	10·1	80·1	80·2	·976	78·3	82	S and SSW ...	201	0·05	Chiefly cloudy, o, d.

The mean pressure of the seven days	Inches. 29·616
The average pressure of the corresponding period for 24 years, Surveyor-General's Office	29·586
	Hours.
The total number of hours of bright sunshine	24·8
The maximum possible number of hours of sunshine	91·2
	°
The mean temperature of the seven days	84·0
The average temperature of the corresponding period for 24 years, Surveyor-General's Office	83·1
The extreme variation of temperature	13·4
The maximum temperature	91·4
	Miles.
The highest velocity of the wind in one hour	16
	%
The mean relative humidity	83
The average relative humidity of the corresponding period for 24 years, Surveyor-General's Office	86
	Inches.
The total fall of rain from 3rd to 9th August 1902	0·58
The average fall of the corresponding period for 24 years, Surveyor-General's Office	2·69
The total fall from 1st January to 9th August 1902	39·88
The average fall of the corresponding period for 24 years, Surveyor-General's Office	38·44

The mean pressure, temperature, etc., are deduced from the traces of the Barograph and Thermograph, and from eye observations.

The maximum and minimum temperatures are obtained from self-registering thermometers. All the thermometers are verified and the readings have been corrected to a standard constructed and verified at the Kew Observatory. They are exposed under a thatched shed open at the sides, and are suspended four feet above the ground.

The barometer readings are corrected approximately to those of the standard, Newman's No. 86, formerly at the Surveyor-General's Office.

The hygrometric elements are obtained from Tables III, IV, and V of the official tables computed in the Meteorological Office, and based on Regnault's modifications of August's formula.

The directions and the movement of the wind are taken from the trace of a Beckley's anemograph.

The month of the rain-gauge is one foot above the ground.

o, overcast; d, drizzling rain; p, passing temporary showers.

METEOROLOGICAL OFFICE, GOVT. OF INDIA,
Alipore (Calcutta), the 11th August 1902.

G. W. KÜCHLER
for *Meteorological Reporter to the Govt. of India, and Director-General of Indian Observatories.*

Weekly Return of Traffic Receipts on Indian Railways

BENGAL CENTRAL RAILWAY COMPANY, LIMITED.

Approximate Return of Traffic and Mileage for the week ended 26th July 1902 on 139 miles open.

	Coaching Traffic.		Merchandise and Mineral Traffic.		Other earnings.	Total earnings.	Traffic Train-miles run.		
	Number of passengers.	Coaching receipts.	Weight carried.	Receipts.			Coaching.	Merchandise.	Total.
		Rs. A. P.	Mds. s.	Rs. A. P.	Rs. A. P.	Rs. A. P.			
Total traffic for the week ...	30,603	13,386 0 0	37,793 0	3,582 0 0	94 0 0	17,062 0 0	3,354	2,416	5,770
Or per mile of railway	235	103 0 0*	272 0	26 0 0	1 0 0	130 0 0	.....	.....	.....
For previous 3 weeks of half-year	105,536	42,925 0 0	1,11,594 0	8,648 0 0	404 0 0	51,977 0 0	9,094	7,751	16,845
Total for 4 weeks ...	136,139	56,311 0 0	1,49,687 0	12,230 0 0	498 0 0	69,039 0 0	12,448	10,167	22,615
Comparison.									
Total for corresponding week of previous year	33,267	13,040 0 0	68,079 0	6,607 0 0	24,945 0 0	45,192 0 0	3,141	2,955	6,096
Per mile of railway corresponding week of previous year ...	256	105 0 0	490 0	48 0 0	179 0 0	332 0 0	.....	.....	.....
Total to corresponding date of previous year	138,168	56,065 0 0	2,07,868 0	17,113 0 0	26,333 0 0	93,511 0 0	12,675	10,119	22,794

* Coaching traffic calculated on 130 miles only.

ASSAM-BENGAL RAILWAY.

Approximate Return of Traffic for the week ended 26th July 1902 on 558 miles open for all descriptions of traffic, and an additional 31 miles for goods and parcels traffic only.

	Coaching Traffic.		Merchandise and Mineral Traffic.		Other earnings	Total earnings.	Traffic Train-miles run.		
	No. of passengers.	Coaching receipts.	Weight carried.	Receipts.			Coaching.	Merchandise.	Total.
		Rs. A. P.	Mds. s.	Rs. A. P.	Rs. A. P.	Rs. A. P.			
Total traffic for the week ...	27,840	16,746 0 0	1,74,762 0	15,493 0 0	1,724 0 0	33,963 0 0	6,462	8,905	15,367
Or per mile of railway	49·89	30·01	296·71	26·30	2·93	59·24	11·58	15·12	26·70
For previous 8 weeks of half-year	85,864	48,391 0 0	4,57,214 0	41,152 0 0	3,801 0 0	93,344 0 0	18,133	23,389	41,522
Total for 4 weeks ...	113,704	65,137 0 0	6,31,976 0	56,645 0 0	5,525 0 0	1,27,307 0 0	24,595	32,294	56,889
Comparison.									
Total for corresponding week of previous year	27,034	16,800 0 0	1,01,624 0	17,275 0 0	144 0 0	34 219 0 0	6,345	6,372	12,717
Per mile of railway corresponding week of previous year ...	48·45	30·11	175·62	29·89	0·25	60·25	11·37	11·02	22 39
Total to corresponding date of previous year	109,736	66,849 0 0	4,61,744 0	67,532 0 0	6,874 0 0	1,41,255 0 0	25,004	24,441	49,446

FINANCIAL YEAR.

Approximate Statement of Gross Receipt of the Assam-Bengal Railway.

Receipts for week ending 26th July 1902.			Receipts for the week ending 27th July 1901.			Total receipts from 1st April 1902 to 26th July 1902.			Total receipts from 1st April 1901 to 27th July 1901.			Total increase in 1902.	Total decrease in 1902.
Mean mileage worked.	Receipts.	Per mile worked.	Mean mileage worked.	Receipts.	Per mile worked.	Mean mileage worked.	Total receipts.	Per mile worked.	Mean mileage worked	Total receipts.	Per mile worked		
	Rs.	Rs.		Rs.	Rs.		Rs.			Rs.		Rs.	Rs.
569	33,963	59 24	578	34,219	60·25	589	6,15,273	...	578	6,62,052	...	.....	46,779

EASTERN BENGAL STATE RAILWAY.

(INCLUDING N. B., K.-D., DACCA AND ASSAM-BEHAR SECTIONS.)

Approximate Return of Traffic and Mileage for the week ended 26th July 1902 on 854 miles open.

	COACHING TRAFFIC.		MERCHANDISE AND MINERAL TRAFFIC.		Other earnings (including ferry).	Total earnings.	TRAFFIC TRAIN-MILES RUN.		
	Number of passengers.	Coaching receipts.	Weight carried.	Receipts.			Coaching.	Merchandise.	Total.
		Rs. A. P.	Mds. s.	Rs. A. P.	Rs. A. P.	Rs. A. P.			
Total traffic for the week ...	216,440	1,06,130 0 0	11,27,950 0	1,61,320 0 0	35,170 0 0	3,02,620 0 0	38,018	34,313	72,331
Or per mile of railway ...	253	124 0 0	1,321 0	189 0 0	30 0 0*	343 0 0*	...	...	...
For previous 3 weeks of half-year	634,280	3,06,990 0 0	19,30,070 0	3,09,970 0 0	21,180 0 0	6,38,140 0 0	102,718	93,345	196,063
Total for 4 weeks ...	850,720	4,13,120 0 0	30,58,020 0	4,71,290 0 0	56,350 0 0	9,40,760 0 0	140,736	127,658	268,394
COMPARISON.									
Total for corresponding week of previous year	208,183	96,897 0 0	15,79,298 0	1,75,116 0 0	44,837 0 0	3,16,850 0 0	37,174	34,311	71,485
Per mile of railway corresponding week of previous year ...	244	113 0 0	1,849 0	205 0 0	34 0 0	352 0 0	...	...	...
Total to corresponding date of previous year	803,187	3,84,298 0 0	35,22,890 0	4,54,708 0 0	68,764 0 0	9,07,770 0 0	141,850	126,242	268,092

* Excluding ferry earnings.

BRAHMAPUTRA-SULTANPUR RAILWAY.

Approximate Return of Traffic and Mileage for the week ended 26th July 1902 on 59·19 miles open.

	COACHING TRAFFIC.		MERCHANDISE AND MINERAL TRAFFIC.		Other earnings (including ferry).	Total earnings.	TRAFFIC TRAIN-MILES RUN.		
	No. of passengers.	Coaching receipts.	Weight carried.	Receipts.			Coaching.	Merchandise.	Total.
		Rs. A. P.	Mds. s.	Rs. A. P.	Rs. A. P.	Rs. A. P.			
Total traffic for the week ...	6,730	2,070 0 0	20,850 0	2,080 0 0	70 0 0	4,220 0 0	1,148	1,156	2,304
Or per mile of railway	114	35 0 0	352 0	35 0 0	1 0 0	71 0 0	...	...	...
For previous 3 weeks of half-year	18,230	5,490 0 0	34,600 0	3,500 0 0	150 0 0	9,140 0 0	2,980	2,120	5,100
Total for 4 weeks ...	24,950	7,560 0 0	55,450 0	5,580 0 0	220 0 0	13,360 0 0	4,128	3,276	7,404
COMPARISON.									
Total for corresponding week of previous year	6,319	1,775 0 0	28,266 0	2,606 0 0	28 0 0	4,409 0 0	995	1,271	2,266
Per mile of railway corresponding week of previous year	107	30 0 0	479 0	44 0 0	1 0 0	75 0 0	...	...	...
Total to corresponding date of previous year	23,781	6,693 0 0	63,070 0	5,747 0 0	91 0 0	12,531 0 0	3,750	5,190	8,940

MYMENSINGH-JAGANNATHGANJ RAILWAY.

Approximate Return of Traffic and Mileage for the week ended 26th July 1902 on 53·37 miles open.

	COACHING TRAFFIC.		MERCHANDISE AND MINERAL TRAFFIC.		Other earnings (including ferry).	Total earnings.	TRAFFIC TRAIN-MILES RUN.		
	Number of passengers.	Coaching receipts.	Weight carried.	Receipts.			Coaching.	Merchandise.	Total.
		Rs. A. P.	Mds. s.	Rs. A. P.	Rs. A. P.	Rs. A. P.			
Total traffic for the week ...	8,520	2,290 0 0	12,050 0	630 0 0	30 0 0	2,950 0 0	1,270	844	2,114
Or per mile of railway ...	160	43 0 0	237 0	12 0 0	.....	55 0 0	...	...	...
For previous 3 weeks of half-year	20,770	5,900 0 0	17,160 0 0	1,020 0 0	50 0 0	6,970 0 0	3,262	2,402	5,664
Total for 4 weeks ...	29,290	8,190 0 0	29,830 0	1,650 0 0	80 0 0	9,920 0 0	4,532	3,246	7,778
COMPARISON.									
Total for corresponding week of previous year	7,062	2,014 0 0	5,768 0	578 0 0	39 0 0	2,631 0 0	1,092	955	2,047
Per mile of railway corresponding week of previous year ..	144	37 0 0	108 0	11 0 0	1 0 0	49 0 0	...	...	...
Total to corresponding date of previous year	28,320	7,767 0 0	14,259 0	1,164 0 0	77 0 0	9,008 0 0	4,570	3,161	7,731

DACCA STATE RAILWAY.

Approximate Return of Traffic and Mileage for the week ended 26th July 1902 on 86 miles open.

	Coaching Traffic.		Merchandise and Mineral Traffic.		Other earnings.	Total earnings.	Traffic Train-miles run.		
	Number of passengers.	Coaching receipts.	Weight carried.	Receipts.			Coaching.	Merchandise.	Total.
		Rs A. P.	Mds. s	Rs. A. P	Rs. A. P.	Rs A. P.			
Total traffic for the week	25,030	7,800 0 0	36,840 0	2,620 0 0	400 0 0	10,820 0 0	2,832	1,552	4,384
Or per mile of railway	291	91 0 0	428 0	30 0 0	5 0 0	126 0 0	...	...	...
For previous 3 weeks of half-year	79,690	20,980 0 0	33,150 0	3,430 0 0	610 9 0	25,020 0 0	8,276	4,412	12,688
Total for 4 weeks ..	104,720	28,780 0 0	69,990 0	6,050 0 0	1,010 0 0	35,840 0 0	11,108	5,964	17,072
Comparison									
Total for corresponding week of previous year	24,870	7,241 0 0	66,103 0	3,785 0 0	4,080 0 0	15,109 0 0	2,884	1,828	4,712
Per mile of railway corresponding week of previous year ...	289	84 0 0	769 0	44 0 0	47 0 0	175 0 0	...	...	...
Total to corresponding date of previous year	90,409	27,088 0 0	98,603 0	8,077 0 0	4,344 0 0	40,109 0 0	11,278	7,605	18,883

COOCH BEHAR STATE RAILWAY.

Approximate Return of Traffic and Mileage for the week ended 26th July 1902 on 33·78 miles open.

	Coaching Traffic.		Merchandise and Mineral Traffic.		Other earnings (including ferry).	Total earnings.	Traffic Train-miles run.		
	Number of passengers.	Coaching receipts.	Weight carried.	Receipts.			Coaching.	Merchandise.	Total.
		Rs. A. P.	Mds s.	Rs. A P.	Rs. A. P.	Rs. A. P.			
Total traffic for the week	2,580	930 0 0	9,020 0	960 0 0	10 0 0	1,900 0 0	296	2,310*	2,606*
Or per mile of railway	76	28 0 0	267 0	28 0 0	.....	56 0 0	.....	.....	.....
For previous 3 weeks of half-year	7,630	2,670 0 0	18,250 0	2,390 0 0	50 0 0	5,110 0 0	868	5,008	5,876
Total for 4 weeks ...	10,210	3,6 0 0 0	27,270 0	3,350 0 0	60 0 0	7,010 0 0	1,164	7,318	8,482
Comparison.									
Total for corresponding week of previous year	2,282	769 0 0	5,620 0	589 0 0	152 0 0	1,510 0 0	239	307	546
Per mile of railway corresponding week of previous year	68	23 0 0	166 0	17 0 0	1 0 0	41 0 0	.....	.....	.....
Total to corresponding date of previous year	8,017	2,837 0 0	19,284 0	2,241 0 0	550 0 0	5,628 0 0	847	1,313	2,160

* Including ballast train-miles 2,100.

BENGAL AND NORTH-WESTERN RAILWAY.

Approximate Return of Traffic for the week ending 26th July 1902 on 1,262 miles open.

	Coaching Traffic.		Merchandise and Mineral Traffic.		Other earnings (estimated), including steam-boat.	Total earnings.	Traffic Train-miles run.		
	No. of passengers.	Receipts.	Weight carried.	Receipts.			Coaching.	Merchandise.	Total.
		Rs.	Mrs.	Rs	Rs.	Rs.			
Total traffic for the week on 1,262 miles open	177,830	68,820	5,36,010	(a) 60,910	(b) 12,850	(a) 1,42,580	41,243	(c) 29,379	70,622
Or per mile of railway	140·90	54·54	424·73	48·26	10·18	112·98	.....	.....	.....
For previous 2½ weeks of half-year	544,390	2,16,630	17,01,750	1,85,460	46,630	4,52,700	112,153	85,281	197,434
Total for 3½ weeks	723,210	2,87,440	22,37,760	2,46,360	61,480	5,95,280	153,396	114,960	268,356
Comparison.									
Total for corresponding week of previous year on 1,251 miles open	189,626	67,264	9,02,012	76,015	23,100	1,66,379	34,307	(d) 29,455	63,762
Per mile of corresponding week of previous year	151·58	53·77	721·03	60·76	18·46	132·99	.....	.....	.....
Total to corresponding date of previous year	716,136	2,73,118	26,60,014	2,97,055	71,723	6,41,896	150,796	117,375	248,171

(a) Decrease under goods arises chiefly on local traffic owing to heavier rains. On account of ballast trains mds. 80,000 and Rs. 1,500 were included in this week against mds. 367,685 and Rs. 11,252 in the corresponding week of the previous year.

(b) Decrease under other earnings is due to Rs. 3,0.0 on account of Gunduck bridge tolls, Rs. 1,978 house rent, Rs. 2,290 land rents, and Rs. 1,919 out-agency receipts included in the corresponding week of the previous year.

(c) Includes 4,952 miles of ballast trains run on open line.

(d) ,, 5,342 ,, ,, ,,

SEGOWLIE-RAKSAUL BRANCH RAILWAY.

(WORKED BY THE B. & N.-W. RAILWAY.)

Approximate Return of Traffic for the week ending 26th July 1902 on 18 miles open.

	Coaching Traffic.		Merchandise and Mineral Traffic.		Other earnings (estimated).	Total earnings.	Traffic Train-miles run.		
	Passengers carried.	Receipts.	Weight carried.	Receipts.			Coaching.	Merchandise.	Total.
	No.	Rs.	Mds.	Rs.	Rs.	Rs.			
Total traffic for the week on 18 miles open	1,466	213	5,207	122	10	345	432	72	504
Or per mile of railway	81·44	11·83	289·28	6 78	0·56	19·17	.....	.....	.....
For previous 2½ weeks of half-year	3,984	583	33,618	716	11	1,310	973	395	1,368
Total for 3½ weeks	5,450	796	38,825	838	21	1,655	1,405	467	1,872
COMPARISON.									
Total for corresponding week of previous year on 18 miles open	1,988	312	9,150	208	6	586	414	90	504
Per mile of corresponding week of previous year	110·44	17·33	508·33	14·22	0·31	32·56	.....	.....	.....
Total to corresponding date of previous year	8,019	1,267	33,519	1,005	52	2,324	1,592	352	1,944

SEGOWLIE-RAKSAUL BRANCH RAILWAY.

(WORKED BY THE B. & N.-W. RAILWAY.)

Audited Return of Traffic for the week ending 14th June 1902 on 18 miles open.

	Coaching Traffic.		Merchandise and Mineral Traffic.		Other earnings.	Total earnings.	Traffic Train-miles run.		
	Passengers carried.	Receipts.	Weight carried.	Receipts.			Coaching.	Merchandise.	Total.
	No.	Rs. A. P.	Mds.	Rs. A. P.	Rs. A. P.	Rs. A. P.			
Total traffic for the week on 18 miles open	2,307	339 5 0	16,998	457 12 0	10 2 0	807 3 0	384	120	504
Or per mile of railway	128·17	18 13 7	944·33	25 6 11	0 9 0	44 13 6	.....	.....	.....
For previous 22½ weeks of half-year	58,925	10,002 12 0	2,89,150	7,374 1 1	841 0 0	18,217 13 1	8,411	3,001	11,412
Total for 23½ weeks	61,232	10,342 1 0	3,06,157	7,831 13 1	851 2 0	* 19,025 0 1	8,795	3,121	11,916
COMPARISON.									
Total for corresponding week of previous year on 18 miles open	2,217	366 1 5	24,385	572 6 9	7 6 0	945 14 2	320	184	504
Per mile of corresponding week of previous year	123 17	20 5 5	1,354·72	31 12 10	0 6 6	52 8 9	.....	.....	.....
Total to corresponding date of previous year	46,866	8,162 5 8	3,35,624	9,403 2 7	766 0 0	18,423 8 3	8,575	2,918	11,493

DARJEELING-HIMALAYAN RAILWAY COMPANY, LIMITED.

		Rs. A. P.	Rs. A. P.
Approximate earnings for the week ending 2nd Aug. 1902 ...	Coaching ...	4,926 0 0	14,309 0 0
	Goods ...	9,147 0 0	
	Other earnings ...	236 0 0	
Audited earnings for the corresponding period of 1901 ...	Coaching ...	4,955 0 0	14,215 0 0
	Goods ...	9,127 0 0	
	Other earnings ...	133 0 0	
	Increase ...		94 0 0
Receipts per mile for the week ending 2nd Aug. 1902			280 9 1
Ditto for the corresponding period of 1901			278 11 7
	Increase ...		1 13 6
Receipts from 1st July to 2nd Aug. 1902			71,768 0 0
Ditto for the corresponding period of 1901			70,687 0 0
	Increase ...		1,081 0 0

Printed at the Printing Office, and published by the Book Depôt, of the Bengal Secretariat, Writers' Buildings, in the City of Calcutta, on 13th August 1902.

REGISTERED No. 0209.]

No. 34 of 1902.

The Calcutta Gazette.

WEDNESDAY, AUGUST 20, 1902.

CONTENTS.

	Page
PART I.—Orders and Notifications by the Lieutenant-Governor of Bengal, the High Court, Government Treasury, &c.	1125—1150
PART IA.—Orders and Notifications by the Government of India	131—136
PART IB.—Orders by the Lieutenant-Governor of Bengal	159—162
PART II.—Advertisements	1011—1049
PART III.—Acts of the Bengal Council	*Nil*
PART IV.—Bills of the Bengal Council:—	
Revised Report of the Select Committee on the Bill to amend the Bengal Drainage Act, 1880	23—34
PART IVA.—Proceedings of the Bengal Legislative Council:—	
Proceedings of the Meeting dated 11th August 1902	85—87
PART V.—Acts of the Governor-General's Council assented to by the Governor-General	*Nil*
PART VI.—Bills introduced into the Council of the Governor-General for making Laws and Regulations or published under Rule 23 ...	*Nil*
APPENDIX.—Marine Notifications	317—325
SUPPLEMENT No 34:—	
Preliminary Forecast of the Sugarcane Crop of Bengal, 1902	1159
Statistical Return of Crops, Meteorology, Rainfall, Vital Statistics, Circular and Eastern Canal, Results of Meteorological Observations, Railway Traffic Receipts, &c., &c.	1161—1202

PART I

Orders and Notifications by the Lieutenant-Governor of Bengal, the High Court, Government Treasury, &c.

ORDERS BY THE LIEUT.-GOVERNOR OF BENGAL.

[*In continuation of Tour Programme dated 7th August 1902.*]

TOUR OF HIS HONOUR THE LIEUTENANT-GOVERNOR OF BENGAL DURING AUGUST 1902.

Miles.	Day of the—		Places.	Railway time.	Remarks.
	Week.	Month.			
	Thursday	1902. Aug. 21st	Calcutta ... dep.	18-0	His Honour's special train on arrival from Cuttack will be at once transferred to the East Indian Railway. Dinner in train.

Miles	Day of the— Week.	Month.	Places.		Railway time.	Remarks.
		1902.				
	Friday	Aug. 22nd	Jessore	... arr.	0-50	
			Do.	... dep.	16-30	
			Khulna	... arr.	18-5	Embark on steamer. Dinner on board.
				dep.	19-0	Pass through proposed bhil route by night, returning next morning.
	Saturday	„ 23rd	Do.	... arr.	12-0	
				dep	17-0	By special train. Dinner in train.
			Calcutta	... arr.	21-55	Sealdah (9-3 P.M., Calcutta time). Arrival private.

By order,

CALCUTTA,
The 15th August 1902.

J. STRACHEY, MAJOR,
Private Secy. to the Lieut.-Govr. of Bengal.

No. 3847A.

APPOINTMENTS AND TRANSFERS.

GENERAL.—*No. 3714A.—The 15th August 1902.*—Mr. Jotindro Nath Roy, Deputy Magistrate and Deputy Collector, Monghyr, is appointed to have charge of the Supaul subdivision of the Bhagalpur district.

Monghyr.
Bhagalpur.

No. 3716A.—The 15th August 1902.—Maulvi Muhammad Shams-uz-Zoha, Deputy Magistrate and Deputy Collector, Saran, is transferred to the head-quarters station of the Monghyr district.

Saran.
Monghyr.

No. 3720A.—The 15th August 1902.—Babu Kali Coomar Roy Chowdhury, Deputy Magistrate and Deputy Collector, Khulna, is appointed to have charge of the Bagerhat subdivision of that district, during the absence, on leave, of Babu Kali Das Mookerjee, or until further orders.

Khulna.

No. 3722A.—The 15th August 1902.—Babu Bhabataran Chatterjea, Deputy Magistrate and Deputy Collector, Saran, is appointed to have charge of the Kurigaon subdivision of the Rangpur district, during the absence, on deputation, of Mr. Jnanendra Nath Roy, or until further orders.

Saran.
Rangpur.

This cancels the order of the 5th August 1902, appointing Babu Jadu Nath Sarkar, Deputy Magistrate and Deputy Collector, Rangpur, to have charge of the Kurigaon subdivision of that district.

No. 3727A.—The 15th August 1902.—Babu Nayananjan Bhattacharjee, Deputy Magistrate and Deputy Collector, on leave, is appointed to have charge of the Basirhat subdivision of the 24-Parganas district, during the absence, on leave, of Babu Mohim Chandra Ghosh, or until further orders.

24-Parganas.

No. 3737A.—The 15th August 1902.—Mr. A. H. Clayton, Officiating Joint-Magistrate and Deputy Collector, Backergunge, is appointed to act as Magistrate and Collector, Rangpur, during the absence, on leave, of Mr. Purna Chandra Mitter, or until further orders.

Backergunge.
Rangpur.

No. 3768A.—The 18th August 1902.—Mr. C. J. Stevenson-Moore, Officiating Magistrate and Collector, 24-Parganas, is appointed to act as Commissioner of the Presidency Division, in addition to his own duties, during the absence, on leave, of Mr. M. Finucane, C.S.I., or until further orders.

24-Parganas.
Calcutta.

No. 3779A.—The 18th August 1902.—Mr. E. F. Growse, Officiating Additional Commissioner of Patna, is appointed to act as Commissioner of the Patna Division, during the absence, on leave, of Mr. L. Hare, C.I.E., or until further orders.

Patna.

No. 3824A.—The 19th August 1902.—Mr. W. A. Marr, Officiating Joint-Magistrate and Deputy Collector, Midnapore, is appointed to act as Magistrate and Collector, Hooghly, during the absence, on leave, of Mr. R. C. Hamilton, or until further orders.

Midnapore.
Hooghly.

No. 3828A.—The 19th August 1902.—Mr. R. G. Kilby, Officiating Joint-Magistrate and Deputy Collector, Bettiah, Champaran, is appointed to act as Magistrate and Collector of that district, during the absence, on leave, of Mr. J H. Bernard, or until further orders.

Champaran.

No. 3830A.—The 19th August 1902.—Mr. M. C. McAlpin, Assistant Magistrate and Collector, Champaran, is appointed to have charge of the Bettiah subdivision of that district, during the absence, on deputation, of Mr. R. G. Kilby, or until further orders.

Champaran.

POLICE.—*No. 3701A.—The 14th August 1902.*—Babu Janki Pershad Tewary, Officiating District Superintendent of Police, Pabna, is appointed to act as District Superintendent of Police, Mymensingh, during the absence, on leave, of Mr. A. A. Campbell, or until further orders.

Pabna.
Mymensingh.

No. 3773A.—The 18th August 1902.—Mr. J. E. Armstrong, Officiating District Superintendent of Police, Angul, is transferred to Jalpaiguri, *vice* Mr. J. V. Ryan, on leave.

Angul.
Jalpaiguri.

No. 3775A.—The 18th August 1902.—Mr. R. Clarke, Probationary Assistant Superintendent of Police, in charge of the Patna City Police, is appointed to have charge of the District Police of Angul, *vice* Mr. J. E. Armstrong.

Patna.
Angul.

REGISTRATION.—*No. 3785A.—The 18th August 1902.*—The order of the 11th January 1902, appointing Babu Akhauri Dhanindra Narain, Rural Sub-Registrar, Husainabad, to act as Special Sub-Registrar, Palamau, is cancelled.

Palamau.

No. 3834A.—The 19th August 1902.—Babu Bhubaneshwar Parshad, Special Sub-Registrar of Monghyr, is appointed to be Special Sub- Registrar of Bhagalpur, with effect from the 1st October 1902, *vice* Maulvi Sayed Mohumad Ali Khan, about to retire.

Monghyr.
Bhagalpur.

No. 3836A.—The 19th August 1902.—Babu Ramji Parshad, Rural Sub-Registrar of Sitamarhi, in the district of Muzaffarpur, is appointed to be Special Sub-Registrar of Monghyr, with effect from the 1st October 1902, *vice* Babu Bhubaneshwar Parshad.

Muzaffarpur.
Monghyr.

EDUCATION.—*No. 3817A.—The 19th August 1902.*—Mr. M. E. DuS. Prothero, Indian Educational Service, is appointed to be Inspector of Schools, Patna Division, *vice* Mr. C. W. Peake.

Patna Division.

ECCLESIASTICAL.—*No. 3696A.—The 14th August 1902.*—Mr. William John Hamilton, of the English Presbyterian Church Mission in Rajshahi, is authorised, under section 6 of Act XV of 1872, to solemnize marriages between persons, one of whom is a Christian, or both of whom are Christians, and, under section 9 of the same Act, to grant certificates of marriage between persons who are Native Christians.

Rajshahi.

Mr. William John Hamilton is also appointed, under Act VI of 1886, to be a Registrar of Births and Deaths.

LEAVE.

GENERAL.—*No. 3718A.—The 15th August 1902.*—Babu Kali Das Mookerjee, Deputy Magistrate and Deputy Collector, Bagerhat, Khulna, is allowed leave for one month and ten days, under article 291 of the Civil Service Regulations.

Khulna.

No. 3725A.—The 15th August 1902.—Babu Mohim Chandra Ghosh, Deputy Magistrate and Deputy Collector, Basirhat, 24-Parganas, is allowed leave for three months, under article 291 of the Civil Service Regulations, with effect from the date on which he may be relieved.

24-Parganas.

No. 3733A.—The 15th August 1902.—Mr. J. H. E. Garrett, Magistrate and Collector, Dinajpur, is allowed leave for one month, under article 291 of the Civil Service Regulations, with effect from the 30th August 1902, or any subsequent date on which he may be relieved.

Dinajpur.

No. 3735A.—The 15th August 1902.—Mr. Purna Chandra Mitter, Magistrate and Collector, Rangpur, is allowed leave for three months, under article 291 of the Civil Service Regulations, with effect from the 8th September 1902, or any subsequent date on which he may be relieved.

Rangpur.

No. 3766A.—The 18th August 1902.—Mr. M. Finucane, C.S.I., Commissioner of the Presidency Division, is allowed leave for twenty-seven days, under article 291 of the Civil Service Regulations, with effect from the 8th September 1902.

Calcutta.

No. 3777A.—The 18th August 1902.—Mr. L. Hare, C.I.E., Commissioner of Patna, is allowed leave for five weeks, under article 291 of the Civil Service Regulations, with effect from the 1st September 1902, or any subsequent date on which he may be relieved.

Patna.

No. 3826A.—The 19th August 1902.—Mr. J. H. Bernard, Magistrate and Collector,
Champaran. Champaran, is allowed leave for six weeks, under article 291 of the Civil Service Regulations, with effect from the 20th September 1902, or any subsequent date on which he may be relieved.

No. 3832A.—The 19th August 1902.—Maulvi Syed Ali Hasan, Deputy Magistrate and
Champaran. Deputy Collector, Champaran, is allowed leave for three months, under article 291 of the Civil Service Regulations, with effect from the afternoon of the 11th August 1902.

VOLUNTEERS.—*No. 3712A.—The 15th August 1902.*—Lieutenant J. D. Magrae, 2nd (Presidency) Battalion, Calcutta Volunteer Rifles, has been granted, by the General Officer Commanding the Presidency District, leave of absence for six months, with effect from the 22nd May 1902.

POLICE.—*No. 3700A.—The 14th August 1902.*—Mr. A. A. Campbell, District Superin-
Mymensingh. tendent of Police, Mymensingh, is allowed combined leave for twelve months, viz, privilege leave for three months, under article 264A of the Civil Service Regulations, with effect from the 15th September 1902, or any subsequent date on which he may avail himself of it, and furlough for the remaining period, under article 340 (*b*) of the Regulations.

No. 3745A.—The 16th August 1902.—Mr. J. D. Boylan, Probationary Assistant
Dacca. Superintendent of Police, Dacca, is allowed leave for six weeks, under article 291 of the Civil Service Regulations, with effect from the 20th August 1902.

No. 3771A.—The 18th August 1902.—Mr. G. W. S. Cox, District Superintendent of
Hazaribagh. Police, Hazaribagh, is allowed leave for three days, under article 291 of the Civil Service Regulations, in extension of the leave granted to him under the order of the 21st June 1902.

REGISTRATION.—*No. 3783A.—The 18th August 1902.*—The order of the 11th January
Palamau. 1902, allowing Maulvi Syed Ameer Hossain, Special Sub-Registrar Palamau, leave for two months, is cancelled.

ECCLESIASTICAL.—*No. 3693A.—The 13th August 1902.*—The Revd. C. Price, Chaplain,
Dinapore. Dinapore, is allowed combined leave for a period of one year, one month and eighteen days, viz., privilege leave for one month and eighteen days, under article 264A of the Civil Service Regulations, with effect from the 22nd July 1902, and furlough for the remaining period under article 647 of the Regulations.

The following orders are republished from the *Assam Gazette* :—

No. 6227G.—The 7th August 1902.—Mr. C. E. Ezechiel, Assistant Superintendent of Police, Nowgong, is transferred to Gauhati and placed in charge of the Civil Police of the Kamrup district.

No. 6228G.—The 7th August 1902. —Mr. A. E. O'Sullivan, Assistant Superintendent of Police, Kamrup, is transferred to Nowgong and placed in charge of the Civil Police of that district.

No. 6278G.—The 8th August 1902.—The Chief Commissioner invests Mr. S. G. Hart, I.C.S., Assistant Commissioner and Magistrate of the first class, with the power to order the sale of unclaimed property seized by the Police, under section 524 (1) of the Code of Criminal Procedure (Act V of 1898).

No. 3564J.—The 7th August 1902.—The appointment of the Additional Munsif in the district of Sylhet, sanctioned in Notification No. 6160J., dated the 14th July 1893, being now made a permanent appointment in the Habiganj subdivision of that district, Babu Raj Kishore, Additional Munsif, is appointed to be a sub. *pro tem.* Munsif in the district of Sylhet and to be ordinarily stationed at Habiganj.

C. E. BUCKLAND,
Chief Secy. to the Govt. of Bengal.

REVENUE DEPARTMENT,—(LAND REVENUE).

NOTIFICATION—No. 3241L.R.

The 18th August 1902.—Whereas an application has been made by the patnidar of five
Hooghly. mauzas, viz, Seja, Sarah, Sagor-naparah, Malipara, Bhagabanbati, and Diepukhuria, comprised in mahal Kolora, appertaining to tauzi No. 106 in the district of Hooghly, for a survey and preparation of a record of rights in respect of all lands situated in those mauzas, and whereas she has agreed to deposit the cost of the operations:

In exercise of the powers conferred by section 101 (2) (*a*) of the Bengal Tenancy Act, VIII of 1885, as amended by Act III (B.C.) of 1898, the Lieutenant-Governor of Bengal is pleased to direct that a survey shall be made and a record of rights prepared in respect of all lands situated within the external boundaries of the said mauzas in the district of Hooghly.

The particulars to be recorded in the survey and record of rights shall be the following:—

(*a*) The name of each tenant or occupant.

(*b*) The class to which each tenant belongs, that is to say, whether he is a tenure-holder, raiyat holding at fixed rates, settled raiyat, occupancy raiyat, non-occupancy raiyat or under-raiyat; and, if he is a tenure-holder, whether he is a permanent tenure-holder or not, and whether his rent is liable to enhancement during the continuance of his tenure.

(*c*) The situation, quantity and one or more of the boundaries of the land held by each tenant or occupier.

(*d*) The name of each tenant's landlord.

(*e*) The money-rent payable at the time the record of rights is being prepared, or if a produce-rent, the fact that produce-rent is paid.

(*f*) The mode in which that rent has been fixed, whether by contract, by order of a Court, or otherwise.

(*g*) If the rent is a gradually increasing rent, the time at which, and the steps by which, it increases.

(*h*) The special conditions and incidents, if any, of the tenancy.

(*i*) If the land is claimed to be held rent-free, whether or not rent is actually paid, and if not paid, whether or not the occupant is entitled to hold the land without payment of rents, and, if so entitled, under what authority.

(*j*) The name of each proprietor, with character and extent of his interest, and the situation, quantity, and one or more of the boundaries of the proprietor's private lands, as defined in Chapter XI of the Act.

W. C. MACPHERSON,
Offg. Secy. to the Govt. of Bengal.

DECLARATION—No. 3236L.R.

The 16th August 1902.—Whereas it appears to the Lieutenant-Governor of Bengal that land is required to be taken by Government at the public expense for a public purpose, viz., for the construction of a Post Office building at Bhabua, in the village of Bhabua, pargana Chainpore, zilla Shahabad, it is hereby declared that for the above purpose a piece of land measuring, more or less, 12 cottahs 14 chitaks of standard measurement, bounded on the—

Shahabad.

North—By Bhabua town road,
South—By field of Ram Proshad Dass,
East—By garden of Bhagvati Dyal,
West—By field of Ram Proshad Dass,

is required within the aforesaid village of Bhabua.

This declaration is made, under the provisions of section 6, Act I of 1894, to all whom it may concern.

W. C. MACPHERSON,
Offg. Secy. to the Govt. of Bengal.

GENERAL DEPARTMENT.

NOTIFICATIONS.

No. 2725.—The 19th August 1902.—The following draft of a notification which it is proposed to issue in exercise of the powers conferred by section 163 (1) of the Assam Labour and Emigration Act, VI of 1901, is published for the information of persons likely to be affected thereby, and notice is hereby given that the draft will be taken into consideration by the Lieutenant-Governor one month after the date of its publication in the *Calcutta Gazette*.

2. Any objection or suggestion which may be received from any person with respect to the draft before the date fixed as aforesaid will be considered by the Lieutenant-Governor.

DRAFT NOTIFICATION.

In exercise of the powers conferred by section 163 (1) of the Assam Labour and Emigration Act, VI of 1901, the Lieutenant-Governor is pleased to sanction the following amendments being made to Rule 91 and Forms 27 and 28 of the Rules published under notification No. 3412, dated the 13th October 1901:—

To be substituted for the first sentence of Rule 91—

91. Every batch of emigrants prior to despatch to a labour district shall be provided with a way-bill *in triplicate*, in order that one copy may be given to the Superintendent of Emigration (Rule 162), one to the Master of the vessel in which the emigrants travel to the Labour Districts (Rule 159), and the third copy to the District Officer of the Labour District (Rule 162).

Provision of way-bill for journey.

To be added as foot-note to Forms Nos. 27 and 28—

"The way-bill should be prepared in triplicate."

No. 2728.—The 19th August 1902.—The Lieutenant-Governor has been pleased, under section 17 of the Reformatory Schools Act, VIII of 1897, to appoint the Hon'ble Mr. Henry Elworthy to be a Member of the Board of Management of the Alipore Reformatory School, *vice* Mr. George Irving, deceased.

Alipore

W. C. MACPHERSON,
Offg. Secy. to the Govt. of Bengal.

FINANCIAL DEPARTMENT.

NOTIFICATIONS.

No. 3983S.R.—The 15th August 1902.—Babu Kshitish Chandra Sarkar, Deputy Collector, is appointed Deputy Collector of Income-tax in the district of Pabna, *vice* Maulvi Abdus Salek, and under section 40 of Act II of 1886 is vested with the powers of a Collector under the Act.

Pabna.

No. 4029S.R.—The 16th August 1902.—In exercise of the power conferred on him by section 30 of the Indian Salt Act, XII of 1882, the Lieutenant-Governor is pleased to vest Mr. S. G L. Platts with the powers of an Assistant Commissioner under that Act in the districts of the 24-Parganas, Midnapore, and Khulna.

24-Parganas.
Midnapore.
Khulna.

No. 4117S.R.—The 19th August 1902.—Babu Ashutosh Chatterjee, Deputy Collector, is appointed Deputy Collector of Income-tax in the district of Chittagong, *vice* Babu Suresh Chandra Sarkar, and under section 40 of Act II of 1886 is vested with the powers of a Collector under the Act.

Chittagong.

E. W. COLLIN,
Offg. Secy. to the Govt. of Bengal.

MEDICAL DEPARTMENT.

No. 2246Medl.—The 14th August 1902.—The services of Captain C. J. Robertson-Milne, I.M.S, Officiating Civil Surgeon of Backergunge, are replaced temporarily at the disposal of the Government of India in the Home Department.

Backergunge.

No. 2249Medl.—The 14th August 1902.—The services of Captain H J. Walton, I.M.S., Officiating First Surgeon, Presidency General Hospital, Calcutta, are replaced at the disposal of the Government of India in the Home Department, with effect from the date on which he may be relieved.

Calcutta.

No. 2312Medl.—The 16th August 1902.—Assistant Surgeon Mohendra Kumar Chakravarti held medical charge of the civil station of Dinajpur from the forenoon of the 17th March to the forenoon of the 28th May 1902.

Dinajpur.

No. 2329Medl.—The 16th August 1902.—Assistant Surgeon Satya Saran Chakravarti is appointed to act as House Surgeon, Howrah General Hospital, during the absence, on leave, of Military Assistant Surgeon W. Clarke, or until further orders.

Howrah.

No. 2331Medl.—The 16th August 1902.—In supersession of the notification No. 458T.M, dated the 15th May 1902, Military Assistant Surgeon D. Waller, Medical Officer at the Sandheads, is allowed privilege leave combined with furlough for thirteen months, viz., privilege leave for three months under articles 264 and 264A of the Civil Service Regulations, and furlough for the remaining period under article 980 (*b*) of the Army Regulations, India, Volume I, Part I.

Sandheads.

No. 2237Medl.—The 18th August 1902.—Captain R. H. Maddox, I.M.S, is appointed, with effect from the afternoon of the 28th June 1902, to act as Civil Surgeon of Ranchi, during the absence, on leave, of Lieutenant-Colonel R. R. H. Whitwell, I.M.S., or until further orders

Ranchi.

No. 2348Medl.—The 19th August 1902.—Dr. A. da Fonsêca Dias is appointed, with effect from the afternoon of the 23rd May 1902, to act as Civil Medical Officer of Nadia, during the absence, on deputation, of Major J. G. Jordan, I.M.S., or until further orders.

Nadia.

No. 2352Medl.—The 19th August 1902.—Captain W. W. Clemesha, I.M.S., on being relieved of his appointment as Officiating Sanitary Commissioner, Bengal, is appointed to act as Deputy Sanitary Commissioner, Northern Bengal Circle, during the absence, on deputation, of Captain B. R Chatterton, I.M.S., or until further orders.

Patna.

E. W. COLLIN,
Offg. Secy. to the Govt. of Bengal.

JUDICIAL DEPARTMENT.

No. 3848A.

APPOINTMENTS AND TRANSFERS.

No. 3705A.—The 14th August 1902.—Babu Jagadis Chandra Sen, B.L., is appointed to act as a Munsif in the district of Pabna and Bogra, to be ordinarily stationed at Bogra, during the absence, on leave, of Babu Shyama Churn Ukil, or until further orders.

Pabna and Bogra.

No. 3750A.—The 18th August 1902.—Babu Gopal Chandra Banerjee, Munsif of Pirojpur, in the district of Backergunge, is appointed to be a Munsif in the district of Hooghly, to be ordinarily stationed at Serampore, on being relieved of his appointment as Officiating Additional Subordinate Judge, Burdwan.

Backergunge. Burdwan. Hooghly.

No. 3752A.—The 18th August 1902.—Babu Akhoy Kumar Bose, substantive *pro tempore* Munsif of Serampore, in the district of Hooghly, is appointed to be a substantive *pro tempore* Munsif in the district of Backerguuge, to be ordinarily stationed at Pirojpur.

Hooghly. Backergunge.

No. 3754A.—The 18th August 1902.—Babu Syam Chand Dhur, Additional Subordinate Judge and Assistant Sessions Judge, Burdwan, is appointed to be Subordinate Judge and Assistant Sessions Judge of Pabna and Bogra, but to be on deputation to Burdwan, until further orders.

Burdwan. Pabna and Bogra.

No. 3756A.—The 18th August 1902.—Babu Jogendro Chunder Maulik, Subordinate Judge, Pabna and Bogra, is appointed to be Subordinate Judge of Rangpur, and is vested with the powers of a Judge of a Court of Small Causes for the trial of suits cognizable by such a Court up to the value of Rs. 500, within the local limits of the Sadar Munsifi of Rangpur. He is also vested with the functions of a District Court, under section 26, sub-section 1 of Act VII of 1889, within the local limits of his jurisdiction.

Pabna and Bogra. Rangpur.

No 3758A.—The 18th August 1902.—Babu Aswini Kumar Guha, Subordinate Judge, Rangpur, is appointed to be Subordinate Judge, Shahabad.

Rangpur. Shahabad.

No. 3761A.—The 18th August 1902.—Babu Govinda Chandra De, Munsif, who is now officiating as Subordinate Judge, Shahabad, is appointed to be a Munsif in the district of Jessore, to be ordinarily stationed at Khulna, and is vested with the powers of a Judge of a Court of Small Causes for the trial of suits cognizable by such a Court up to the value of Rs. 100, within the local limits of the Khulna Munsifi.

Shahabad. Jessore.

No. 3810A.—The 19th August 1902.—Babu Sarada Kumar Sen Gupta, B.L., is appointed to act as a Munsif in the district of Dinajpur, to be ordinarily stationed at Raiganj, during the absence, on leave, of Babu Chunder Kumar Chatterji, or until further orders.

Dinajpur.

No. 3812A.—The 19th August 1902.—Babu Tulsi Das Mukerjee, substantive *pro tempore* Munsif, is appointed to act as a Munsif in the district of Backergunge, to be ordinarily stationed at Patuakhali, during the absence, on deputation, of Babu Ram Narayan Sarkar, or until futher orders.

Backergunge.

No. 3639J.—The 18th August 1902.—Babu Jagat Bandhu Das is appointed to be an Honorary Magistrate at Comilla, in the district of Tippera.

Tippera.

No. 3726J.—The 18th August 1902.—Babu Narain Prosad is appointed to be an Honorary Magistrate of the Independent Bench at Jamui, in the district of Monghyr.

Monghyr.

PROMOTIONS.

No. 3846A.—The 19th August 1902.—The following promotions and confirmations are sanctioned in the Judicial Branch of the Provincial Civil Service:—

Promoted to the first grade of Subordinate Judges.

Babu Kali Kumar Bose, with effect from the 1st July 1902, *vice* Babu Jadu Nath Dass, retired.

„ Srinath Pal, with effect from the 15th July 1902, *vice* Babu Dwarka Nath Mitter, appointed a District and Sessions Judge.

Promoted to the second grade of Subordinate Judges.

Babu Jogendra Nath Ghosh, with effect from the 1st July 1902, *vice* Babu Kali Kumar Bose, promoted.

„ Jadu Nath Ghosh, with effect from the 15th July 1902, *vice* Babu Srinath Pal, promoted.

Confirmed in the third grade of Subordinate Judges.

Babu Jogendra Nath Mitra, with effect from the 1st July 1902, *vice* Babu Jogendra Nath Ghosh, promoted.

„ Chandra Nath Ghosh, with effect from the 15th July 1902, *vice* Babu Jadu Nath Ghosh, promoted.

Promoted substantively pro tempore *to the third grade of Subordinate Judges.*

Babu Bimala Charan Mazumdar, with effect from the 1st July 1902, *vice* Babu Jogendra Nath Mitra, confirmed.

Confirmed in the first grade of Munsifs.

Babu Krishna Dhan Mookerjee, with effect from the 1st July 1902, *vice* Babu Jogendra Nath Mitra, confirmed in the third grade of Subordinate Judges.

„ Sarada Prosad Sen, with effect from the 15th July 1902, *vice* Babu Chandra Nath Ghosh, confirmed in the third grade of Subordinate Judges.

Promoted substantively pro tempore *to the first grade of Munsifs.*

Babu Annada Charan Sen, with effect from the 1st July 1902, *vice* Babu Krishna Dhan Mookerjee, confirmed.

Confirmed in the second grade of Munsifs.

Babu Apurva Chandra Ghose, with effect from the 23rd June 1902, *vice* Babu Basanto Kumar Ghose, deceased.

„ Sukumar Bhattacharji, with effect from the 1st July 1902, *vice* Babu Krishna Dhan Mookerjee, confirmed in the first grade.

„ Khagendra Nath Bose, with effect from the 15th July 1902, *vice* Babu Sarada Prosad Sen, confirmed in the first grade.

Promoted substantively pro tempore *to the second grade of Munsifs.*

Babu Saroda Prosad Bakshi, with effect from the 23rd June 1902, *vice* Babu Apurva Chandra Ghose, confirmed.

„ Sidheswar Chuckerbutty, with effect from the 1st July 1902, *vice* Babu Sukumar Bhattacharji, confirmed.

Promoted to the third grade of Munsifs.

Maulvi Syed Ghalib Hasnain, with effect from the 23rd June 1902, *vice* Babu Apurva Chandra Ghose, confirmed in the second grade.

Confirmed in the third grade of Munsifs.

Mr. Mahomed Wahiduddin Ahmad, with effect from the 1st July 1902, *vice* Babu Sukumar Bhattacharji, confirmed in the second grade.

Babu Jitendra Prosad Chatterjee, with effect from the 15th July 1902, *vice* Babu Khagendra Nath Bose, confirmed in the second grade.

Promoted substantively pro tempore *to the third grade of Munsifs.*

Mr. Iradutulla, with effect from the 1st July 1902, *vice* Mr. Mahomed Wahiduddin Ahmad, confirmed.

Confirmed in the fourth grade of Munsifs.

Babu Netai Charan Ghosh, with effect from the 23rd June 1902, *vice* Maulvi Syed Ghalib Hasnain, promoted to the third grade.

„ Debabrata Mukerjee, with effect from the 1st July 1902, *vice* Mr. Mahomed Wahiduddin Ahmad, confirmed in the third grade.

„ Nalini Kanta Bose, with effect from the 15th July 1902, *vice* Babu Jitendra Prosad Chatterjee, confirmed in the third grade.

LEAVE.

No. 3823A.—The 16th August 1902.—Babu Surjo Narain Dass, Munsif of Barasat, in the district of the 24-Parganas, is allowed leave for one month, under article 306 (*b*) of the Civil Service Regulations, with effect from the date on which he availed himself of it.

24-Parganas.

RESIGNATIONS.

No. 3615J.—The 14th August 1902.—The Lieutenant-Governor accepts the resignation tendered by Babu Kamakhya Charan Mukherjee of his appointment as an Honorary Magistrate of the Sadar Independent Bench, in the district of Rangpur.

Rangpur.

No. 3637J.—The 14th August 1902.—The Lieutenant-Governor accepts the resignation tendered by Babu Jagat Bandhu Das of his appointment as an Honorary Magistrate at Kasba, in the district of Tippera.

Tippera.

No. 3754J.—The 18th August 1902.—The Lieutenant-Governor accepts the resignation tendered by Mr. J. H. Belchambers of his appointment as a Presidency Magistrate for the town of Calcutta.

Calcutta.

POWERS.

No. 3743A.—The 16th August 1902.—Babu Dayanidhi Das, Deputy Magistrate, Puri, is vested with the powers of a Magistrate of the second class.

Puri.

No. 3781A.—The 18th August 1902.—Babu Jadu Nath Chatterjee, Deputy Magistrate, Kalna, Burdwan, is vested with the power to try summarily the offences mentioned in section 260 of the Code of Criminal Procedure.

Burdwan.

No. 3787A.—The 18th August 1902.—Babu Behary Lal Chatterjee, Munsif of Bhadrak, in the district of Cuttack, is vested with the powers of a Judge of a Court of Small Causes for the trial of suits cognizable by such a Court up to the value of Rs. 100, within the local limits of the Bhadrak Munsifi.

Cuttack.

No. 3789A.—The 18th August 1902.—In exercise of the power conferred by sub-section (1) of section 565 of the Code of Criminal Procedure, 1898, the Lieutenant-Governor is pleased to empower the following Magistrate of the first class in the district of Shahabad, viz., Babu Rajani Prosad Neogy, to order, at the time of passing sentence of imprisonment on any person referred to in that sub-section, that the residence or change of residence of such person after release shall be notified as provided by the rules made under sub-section (3) of the said section.

Shahabad.

No. 3791A.—The 18th August 1902.—Babu Purna Chundra Maulik, Deputy Magistrate, Noakhali, is vested with powers under section 110 of the Code of Criminal Procedure.

Noakhali.

No. 3838A.—The 19th August 1902.—Babu Ram Sadan Bhuttacharjee, Deputy Magistrate, Midnapore, is vested with powers under section 133 of the Code of Criminal Procedure.

Midnapore.

No. 3840A.—The 19th August 1902.—Babu Rebati Mohan Chakravarti, Deputy Magistrate, Murshidabad, is vested with the powers of a Magistrate of the second class.

Murshidabad.

No. 3844A.—The 19th August 1902.—In exercise of the power conferred by sub-section (1) of section 565 of the Code of Criminal Procedure, 1898, the Lieutenant-Governor is pleased to empower the following Magistrates of the first class in the district of Howrah, viz., Rai Autul Chandra Chatterjea Bahadur and Babu Khagendra Nath Mitter, to order, at the time of passing sentence of imprisonment on any person referred to in that sub-section, that the residence or change of residence of such person after release shall be notified as provided by the rules made under sub-section (3) of the said section.

Howrah.

No. 3614J.—The 15th August 1902.—Under the authority conferred on him by section 185A, sub-section 1 of the Code of Civil Procedure, the Lieutenant-Governor directs that evidence in cases in which an appeal lies shall be taken down by Babu Kartik Chandra Pal, Subordinate Judge, Shahabad, with his own hand in the English language.

Shahabad.

No. 3640J.—The 18th August 1902.—Babu Jagat Bandhu Das, who has been appointed to be an Honorary Magistrate at Comilla, in the district of Tippera, is vested with the powers of a Magistrate of the second class.

Tippera.

He will try such cases as may be made over to him by the Magistrate of Tippera.

Under the authority vested in him by section 357, sub-section 2 of the Code of Criminal Procedure, Act V of 1898, the Lieutenant-Governor empowers Babu Jagat Bandhu Das to take down evidence in criminal cases in the English language.

No. 3727J.—The 18th August 1902.—Babu Narain Prosad, who has been appointed to be an Honorary Magistrate of the Independent Bench at Jamui, in the district of Monghyr, is vested with the powers of a Magistrate of the third class.

Monghyr.

C. E. BUCKLAND,

Chief Secy. to the Govt. of Bengal.

NOTIFICATION—No. 3716J.

The 16th August 1902.—It is hereby notified for general information that the Lieutenant-Governor sanctions the transfer of that portion of pargana Khaspel, which lies in thana Chas, from the local jurisdiction of the Raghunathpur Munsifi to that of the Purulia Munsifi, in the district of Manbhum.

Manbhum.

C. E. BUCKLAND,

Chief Secy. to the Govt. of Bengal.

NOTIFICATION—No. 3736J.

The 18th August 1902.—In modification of the Notification No. 429J., dated the 18th January 1902, published at page 180 of Part I of the *Calcutta Gazette* of the 22nd idem, it is hereby notified for general information that the Additional Subordinate Judge of Rangpur will hold his sittings at Jalpaiguri from the 3rd November 1902 to the end of the current year instead of from the 9th December 1902.

Rangpur.
Jalpaiguri.

C. E. BUCKLAND,
Chief Secy. to the Govt. of Bengal.

NOTIFICATION—No. 3738J.

The 18th August 1902.—In exercise of the power conferred by section 1 of the Chota Nagpur Rural Police Act, 1887 (Bengal Act V of 1887), the Lieutenant-Governor is pleased to withdraw the areas mentioned below, in the district of Palamau (which formed part of the former district of Lohardaga), from the operation of that Act, with effect from this date:—

Palamau.

THANA MAHUADAND—

Villages—Sirkoi, Dakhintola, Jorhatola, Kaprapat.
Garoo outpost—The whole jurisdiction.

THANA LATIHAR—

Villages—Jungar, Khakhri, Salaya.
Kehr outpost—The whole, excluding villages Betla, Pokhrikalan, Kutum, and Kunna.

THANA RANKA—The whole, excluding villages Ranka, Barahdari, Khuri, Ramkanda, Chinia, Raksi.
Bhandaria outpost—The whole jurisdiction.

THANA GARHWA, UNTARI OUTPOST—

Villages—Ganiyarikallon, Ganiyarikhurd, Bisunia, Tatidiri, Panighatwa, Sakti, Thukrikarwapahar, Jawarib, Sandho, Khutia, Bhuinphor, Suru, Phipsa, Bhandar, Ketwa, Dhobini, Kamakallan, Paraspanikhurd, Kodwa, Raksimonehya, Sikhinichora, Barahsoti, Paraspanikallan, Sindi, Amakhoraya, Panchphedi, Panchpani, Barahia with Karibathan, Aliari, Chaperdagga, Kerwadih, Sardasolki, Jhunki.

C. E. BUCKLAND,
Chief Secy. to the Govt. of Bengal.

NOTIFICATION—No. 3785J.

The 19th August 1902.—With reference to the "Rules to prevent obstructions in the thoroughfares in the town of Calcutta," published at page 1007, Part I of the *Calcutta Gazette* of the 7th August 1901, the Commissioner of Police, Calcutta, with the sanction of the Lieutenant-Governor, substitutes the following rule and note for the rule and note relating to Old Post Office Street:—

Calcutta.

In Old Post Office Street.—In one line on the east side of the road.
On the west side.—One row of four vehicles south of the High Court Main Gate and one row of six vehicles north of the Main Gate and continued in two lines to the north-east corner of the High Court.

NOTE.—No vehicle to be allowed to stand opposite either entrance or exit of the High Court longer than is necessary for setting down or taking up occupants.

C. E. BUCKLAND,
Chief Secy. to the Govt. of Bengal.

NOTIFICATION—No. 3790J.

The 19th August 1902.—Under section 3, Act I (B.C.) of 1876 (an Act to provide for the voluntary registration of Muhammadan marriages and divorces), the Lieutenant-Governor has been pleased to grant a license to Maulvi Abdul Qadir, authorizing him, as a temporary measure, to register Muhammadan marriages and divorces, and to exercise the other functions of a Muhammadan Registrar within the outpost of Raipura, in the district of Noakhali, during the absence, on leave, of Maulvi Mohamed Anwarullah.

Noakhali.

C. E. BUCKLAND,
Chief Secy. to the Govt. of Bengal.

NOTIFICATION—No. 3791J.

The 19th August 1902.—Under section 2, Act XII of 1880 (an Act for the appointment of persons to the office of Kazi), the Lieutenant-Governor has been pleased to grant a sanad (license) to Maulvi Abdul Qadir, appointing him, as a temporary measure, Kazi of outpost Raipura, in the district of Noakhali, for the celebration of marriages and the performance of other rites and ceremonies, when application is made to him to perform any such functions, during the absence, on leave, of Maulvi Mohamed Anwarullah.

Noakhali.

C. E. BUCKLAND,
Chief Secy. to the Govt. of Bengal.

[Third Publication.]

NOTIFICATION—No. 3315J.

The 2nd August 1902.—In exercise of the power conferred by section 2 of Bengal Act II of 1867 (*an Act to provide for the punishment of public gambling and the keeping of common gaming-houses*), the Lieutenant-Governor is pleased to extend the said Act, with effect from the 1st September 1902, to the Chandpur Municipality, in the district of Tippera.

Tippera.

C. E. BUCKLAND,
Chief Secy. to the Govt. of Bengal.

PUBLIC WORKS DEPARTMENT.

ESTABLISHMENT.

The 18th August 1902.

No. 172.—The following notifications issued by the Government of India in the Public Works Department are republished for information:—

No. 280, dated the 15th August 1902.—Mr. W. F. Barrow, Examiner of Public Works Accounts, Bengal, is appointed Examiner of Telegraph Accounts.

No. 282, dated the 15th August 1902.—Mr. F. W. Eicke, Examiner of Public Works Accounts, Assam, is appointed to officiate as Examiner of Public Works Accounts, Bengal.

The 19th August 1902.

No. 173.—The following notification issued by the Government of India in the Public Works Department is republished for information:—

No. 275, dated the 12th August 1902.—Mr. R. B. Buckley, C.S.I., Chief Engineer, first class, and Secretary to the Government of Bengal, Public Works Department, is permitted to retire from the service of Government, under article 720 of the Civil Service Regulations, with effect from the 23rd August 1902.

D. B. HORN,
Offg. Secy. to the Govt. of Bengal.

ESTABLISHMENT.

The 19th August 1902.

No. 174.—The following notification issued by the Government of India in the Public Works Department is republished for information:—

No. 276, dated the 12th August 1902.—With reference to Public Works Department notifications No 59, dated 24th February 1902, and No. 276, dated 12th August 1902, Mr. D. B. Horn is confirmed in the appointment of Chief Engineer and Secretary to the Government of Bengal, Public Works Department, Irrigation Branch, with the rank of Chief Engineer, third class, permanent, with effect from the 23rd August 1902.

W. A. INGLIS,
Offg. Secy. to the Govt. of Bengal.

IRRIGATION DEPARTMENT.

The 19th August 1902.

No. 175.—Declaration.—Whereas it appears to the Lieutenant-Governor of Bengal that land is required to be taken by Government at the public expense for a public purpose, viz., for a retired line of Darbori embankment, in the village of Beli, pargana Katsahi, zilla Balasoro, it is hereby declared that for the above purpose a piece of land measuring, more or less, 3·45 acres of standard measurement, bounded on the north by the embankment and the lands of Shyam Rai Thakur, on the south by the waste land and land of Hari Kamila and others, on the east by Jogeswar Misora's and Baidi Sahu's land, and on the west by Hagar Naik's land and the river, is required within the aforesaid village of Beli.

This declaration is made, under the provisions of section 6 of Act I of 1894, to all whom it may concern.

A plan of the land may be inspected in the office of the Executive Engineer, Balasore Division, Balasore.

D. B. HORN,
Offg. Secy. to the Govt. of Bengal.

RAILWAY DEPARTMENT.

The 19th August 1902.

No. 167R.—Declaration.—Whereas it appears to the Lieutenant-Governor of Bengal that land is required to be taken by Government at the public expense for a public purpose, viz., for borrow-pits at miles 23 to 26 and 29 of the Hajipur-Katihar Extension, Tirhut State Railway, in the villages of Tetri Putti *alias* Lakhminia, Chak Abu Mohommad, Nao Kothi, Rampur, Bhimal, Bishonpur-Ahuk, Balia Buzurg, Chak Jamaluddin, Sanha, Balhalpur, Fatahpur, Mohaddipur, Shahpur, Kurha and Rahua, in pargana Balia, zilla Monghyr, it is hereby declared that for the above purpose a piece of land measuring, more or less, 64 bighas 15 cottahs and 5 chitaks, or 21 acres 1 rood and 27·6 poles of standard measurement, lying on the northern and southern boundaries of the Hajipur-Katihar Extension Railway from miles 22 to 26 and miles 28 to 29, mauza Sadpur *alias* Ashia, Qdam Rasul *alias* Chak Foulad, Akhtiarpur, Chak Abdul Latif, Jamai *alias* Saran Chak, Sultanpur, is required within the aforesaid villages.

This declaration is made, under the provisions of section 6 of Act I of 1894, to all whom it may concern.

A plan of the land may be inspected in the office of the Collector of Monghyr.

No. 168R.—Declaration.—Whereas it appears to the Lieutenant-Governor of Bengal that land is required to be taken by Government at the public expense for a public purpose, viz, for proposed passenger ghat at Bahadurpur, Eastern Bengal State Railway, in the village of Bahadurpur, pargana Nushkurpur, zilla Nadia, it is hereby declared that for the above purpose a piece of land measuring, more or less, 15 bighas 14 cottahs and 5 chitaks of standard measurement, temporarily occupied in 1899, bounded on the north and west by the river Ganges, on the east by the Eastern Bengal State Railway, and on the south by the village of Bahadurpur, is required within the aforesaid village of Bahadurpur.

Mines of coal, iron-stone, slate or other minerals lying under the land, except only such parts of the mines and mineral as it may be necessary to dig or carry away or use in the construction of the work for the purpose of which the land is being acquired, are not needed.

This declaration is made, under the provisions of section 6, Act I of 1894, and section 3, clause (1), Act XVIII of 1885, to all whom it may concern.

A plan of the land is available for inspection in the office of Executive Engineer, Rajbari District, Eastern Bengal State Railway.

No. 169R.—Declaration.—Whereas it appears to the Lieutenant-Governor of Bengal that land is required to be taken by Government at the public expense for a public purpose, viz, for Katras-Mulkera connection of the Jherria Extension, East Indian Railway, in the villages of Chatabad, Lakhorkara and Mulkeera, pargana Katras, zilla Manbhum, it is hereby declared that for the above purpose a piece of land measuring, more or less, 29 bighas 5 cottahs of standard measurement (corresponding to 9 acres 2 roods 27·11 poles), bounded on the north by the land of the East Indian Railway Company, on the south by the land of Bakas Mia, on the east by the land of Nowagurh Coal Company, Kumar bund, and paddy land of Ram Chulai Noonia, Gangadhar Rajwar and Sreeram Mahato, and on the west by the land of Nowagurh Coal Company, paddy land of Babadur Mia and *rabi* land of Sreeram Mahato, is required within the aforesaid villages of Chatabad, Lakhorkara and Mulkeera.

Mines of coal, iron-stone, slate or other minerals lying under the land, except only such parts of the mines and minerals as it may be necessary to dig or carry away or use in the construction of the work for the purpose of which the land is being acquired, are not needed.

This declaration is made, under the provisions of section 6 of Act I of 1894, and section 3, clause (1), Act XVIII of 1885, to all whom it may concern.

A plan of the land may be inspected in the office of the District Engineer, East Indian Railway, Asansol.

No. 170R.—Declaration.—Whereas it appears to the Lieutenant-Governor of Bengal that land is required to be taken by Government at the public expense for a public purpose, viz., for the Midnapore-Jheria extension of the Bengal-Nagpur Railway in the village of Bhoojoodih, zilla Manbhum, it is hereby declared that for the above purpose a piece of land measuring, more or less, 5 acres 1 rood 16 poles, being equivalent to 16 bighas 3 cottahs 10·8 chitaks of standard measurement, is required within the aforesaid village of Bhoojoodih.

Mines of coal, ironstone, slate or other minerals lying under the land, except only such parts of the mines or minerals as it may be necessary to dig or carry away or use in the construction of the works for the purpose of which the land is being acquired, are not needed.

This declaration is made, under the provisions of section 6 of Act I of 1894, and section 3, clause 1 of Act XVIII of 1885 to all whom it may concern.

A plan of the land may be seen in the office of the District Engineer, Adra district, Bengal-Nagpur Railway, at Adra.

No. 171R.—Declaration.—Whereas it appears to the Lieutenant-Governor of Bengal that and is required to be taken by Government at the public expense for a public purpose, viz, for Assisted Siding to Pits 1 and 2, East India Coal Company at Brahmonbarari, on Damuda Branch, East Indian Railway, in the villages of Brahmonbarari and Bhulonbarari, pargana Jheria, zilla Manbhum, it is hereby declared that for the above purpose a piece of

land measuring, more or less, 35 bighas 11 cottahs 6 22 chitaks of standard measurement (corresponding to 11 acres 3 roods 1·36 poles), bounded on the north by the East Indian Railway Company's land, on the south by the waste lands of Nabin Mahata, Dhajadhari Mahata, Beni Madhob Mahata and others, and on the east and west by the colliery lands of East India Coal Company and the waste lands of Nabin Mahata, Dhajadhari Mahata, Beni Madhob Mahata and others, is required within the aforesaid villages of Brahmonbarari and Bhulonbarari.

Mines of coal, iron-stone, slate or other minerals lying under the land, except only such parts of the mines and minerals as it may be necessary to dig or carry away or use in the construction of the work for the purpose of which the land is being acquired, are not needed.

This declaration is made, under the provisions of section 6 of Act I of 1894, and section 3, clause (1), Act XVIII of 1885, to all whom it may concern.

A plan of the land may be inspected in the office of the District Engineer, East Indian Railway, Asansol.

W. A. INGLIS,
Offg. Secy. to the Govt. of Bengal.

MARINE DEPARTMENT.

The 14th August 1902.

No. 110Marine.—The following Not fication No. 1879, dated the 6th August 1902, from the Government of India, relative to the withdrawal of quarantine in Constantinople against arrivals from the Hedjaz Coast, is republished for general information.

D. B. HORN,
Offg. Secy. to the Govt. of Bengal.

No. 1879, dated Simla, the 6th August 1902.

NOTIFICATION—By the Government of India, Home Department.

THE following telegram is published for general information :—

Telegram dated Therapia, the 1st August 1902.

From—His Britannic Majesty's Ambassador Extraordinary and Plenipotentiary at Constantinople,

To—His Excellency the Viceroy.

Hedjaz. Ports released from quarantine for ordinary passengers. Special regulations for pilgrim ships still enforced.

The 18th August 1902.

No. 111 Marine.—In exercise of the powers conferred on him by section 7 of the Inland Steam-Vessels Act, 1884, and in supersession of all existing orders on the subject, the Lieutenant-Governor is pleased to appoint Mr. A. H. C. MacCarthy, Executive Engineer, Gandak Division, to be a Surveyor of inland steam-vessels at Patna, Mokameh, and Digha Ghât.

D. B. HORN,
Offg. Secy. to the Govt. of Bengal.

The 19th August 1902.

No. 112Marine.—The following notification No. 1917, dated the 14th August 1902, from the Government of India, publishing translation of a circular issued by the Constantinople Board of Health, prohibiting admission into the Ottoman Empire of goods and certain articles coming from ports infected with plague, is republished for general information :—

D. B. HORN,
Offg. Secy. to the Govt. of Bengal.

No. 1917, dated Simla, the 14th August 1902.

NOTIFICATION—By the Government of India, Home Department.

THE following translation of a circular issued by the Constantinople Board of Health is published for general information : —

SANITARY ADMINISTRATION OF THE OTTOMAN EMPIRE.

No. 89.

CONSTANTINOPLE, THE 11TH JUNE 1902.

Circular.

IN accordance with the decision of the Board of Health, goods and the articles mentioned below coming from ports infected with plague will be refused admission into the Ottoman Empire :—

(1) Body linen, clothes (which have been worn) and wearing apparel, bedding which has been used, old household furniture, bundles left behind by soldiers or sailors to be returned to their country.

Excepted from the rule are those personal effects (such as under-linen and wearing apparel) which accompany the traveller as baggage and which have been disinfected by a steam stove.

(2) All kinds of rags excepting those articles compressed by hydraulic force and which have been carried as bales of merchandise.

(3) Bags, native baskets (zembils), rugs (hides with wool and hair on them) utilized as carpets or mattresses, embroidery which has been worn.

(4) Raw hides which have not been subjected to any chemical preparation as well as any fresh remains of animals, claws, hoofs, horses, manes, animal hair, crude silk and wool.

(5) Human hair.

(6) Postal bags containing the abovementioned articles and specimens of the same articles.

(7) All goods which have either been packed up with or mixed with materials of a like nature as the articles disallowed.

In every case rags of old papers which have been used inside boxes for the packing of glassware and for porcelain or crockery utensils will be incinerated by the Sanitary authority and replaced by cotton or new paper in order that the articles mentioned can be admitted.

DR. CAZZONIS,
Inspector-General.

N.B.—The above arrangements will come into force from 14th August 1902.

SUBORDINATE CIVIL SERVICE.

No. 3849A.

No. 3747A.—The 16th August 1902 —Maulvi Mohammed Faizullah Khan, Sub-Deputy Collector, on leave, is posted to the Bhagalpur Division.
Bhagalpur Division.

No. 3807A.—The 18th August 1902.—In modification of the order dated the 21st April 1902, Babu Balmukund Kanungo, Sub-Deputy Collector and Tahsildar of the Government Estates Kotdesh, Kodhar, Birajganj, Karumpatsahampur, Atkhuratocally and Balukhund, in the district of Puri, is allowed combined leave for six months, viz., privilege leave for three months under article 264A of the Civil Service Regulations, with effect from the 21st February 1902, and leave on medical certificate for the remaining period under article 369 of the Regulations.
Puri.

No. 3819A.—The 19th August 1902 —Babu Ras Bihary Dutta, Sub-Deputy Collector, employed on cess revaluation work in Cuttack, is allowed leave for three months, under article 291 of the Civil Service Regulations, with effect from the date on which he may avail himself of it.
Cuttack.

No. 3842A.—The 19th August 1902.—Babu Hiranya Kumar Das Gupta, substantive *pro tempore* Sub-Deputy Magistrate, Bagerhat, Khulna, is vested with the powers of a Magistrate of the second class.
Khulna

C. E. BUCKLAND,
Chief Secy. to the Govt. of Bengal.

REGISTRATION DEPARTMENT.

No. 3785A.—The 18th August 1902.—The order of the 11th January 1902, appointing Babu Gajendra Pershad to act as Rural Sub-Registrar of Husainabad in Palamau, is cancelled.
Palamau.

C. E. BUCKLAND,
Chief Secy. to the Govt. of Bengal.

CIVIL MEDICAL DEPARTMENT, BENGAL.

No. 8486, dated Calcutta, the 18th August 1902.—Assistant Surgeon Basanta Kumar Roy did supernumerary duty at the Medical College Hospital, Calcutta, from the forenoon of the 20th May to the forenoon of the 13th June 1902.

No. 8580, dated the 19th August 1902.—In continuation of Civil Medical Department Notification No. 2087D., dated the 9th July 1902, Assistant Surgeon Badrika Nath Mukerjee, of the Bhola Nath Bose's Dispensary at Barrackpore, is allowed privilege leave combined with sick leave for six months, viz., privilege leave for 1 month and 13 days under Article 264A of the Civil Service Regulations, with effect from the 20th June 1902, and sick leave for the remaining period under Article 369 of the Regulations.

T. H. HENDLEY, COL., I.M.S.,
Inspector-General of Civil Hospitals, Bengal.

TREASURY NOTICES.

MR. T. S. THOMAS, Covenanted Deputy Collector, has been placed in charge of the Monghyr Treasury, and is authorised to draw bills on other Treasuries.

H. C. WILLIAMS, *Commissioner.*

COMMR.'S OFFICE, BHAGALPUR, *the 11th August 1902.*

UNCOVENANTED DEPUTY COLLECTOR MAULVI MUHAMMAD HABIBULLAH has been placed in charge of the Bhagalpur Treasury, with effect from the 1st instant, and is authorized to draw bills on other Treasuries.

H. C. WILLIAMS, *Commissioner.*

COMMR.'S OFFICE, BHAGALPUR, *the 15th August 1902.*

EDUCATION DEPARTMENT, BENGAL.

CALCUTTA UNIVERSITY.

NOTICE.

THE Senate will proceed in the month of August 1903 to the election of a Tagore Professor of Law for the term of one year, to commence on the 1st of November 1903.

The salary of the Professorship is Rs. 9,000 per annum, and the Professor will be expected to deliver a course of not less than twelve lectures on one of the following subjects:—

(1) The rules of Interpretation in Hindu Law, with special reference to the Mimánsá aphorisms as applied to Hindu Law.
(2) The Hindu Law of Impartible Property, including the Law of Endowments.
(3) The Muhammadan Law of Inheritance according to the several Schools, with a history of its origin, growth and development.

Candidates for the Professorship are requested to forward their applications to the Registrar on or before the 1st May, 1903, stating on which of the abovenamed three subjects they are prepared to lecture. Each candidate will forward with his application one hundred copies of a brief synopsis of his proposed lectures; and, if he so pleases, the same number of copies of his Introductory Lecture.

The Professor will be expected to commence his lectures in November 1903, to complete the delivery thereof in the following January, and to hold an examination of the students who have attended his lectures. He will be further required to send to the Registrar a complete manuscript copy of his lectures within five months from the commencement of the delivery thereof.

SENATE HOUSE;
The 14th August 1902.

K. C. BANURJI,
Offg. Registrar, Calcutta University.

OFFICE MEMO.

RULES FOR APPEARING AT THE F.A. AND B.A. EXAMINATIONS FOR CANDIDATES FROM THE RAJSHAHI DIVISION WHO ARE NOT STUDENTS OF ANY AFFILIATED INSTITUTION.

DEPUTY INSPECTORS of Schools, Sub-Inspectors of Schools, and *bonâ fide* masters of English schools, who have served as such for the full period of two academical years, or of six months after the examination of the same class last held by the University, in the case of those only who were admitted to a former examination of that class, will be admitted to the

abovementioned examinations. The applications of school-masters should be accompanied by certificate of length of service from the Secretaries or Managers of the schools in which they are employed, and should reach this office not later than the 6th January 1903. The application of a school-master for permission to appear at the F.A. or B.A. examination should be signed by him in the *presence* of the Secretary or a Member of the Managing Committee of the school in which he is employed. The application should be forwarded to this office for countersignature, together with the Registrar's certificate, to prove, if this be the case, that the candidate has appeared at the examination in a previous year, and the certificate in proof of his having passed the Entrance or F.A. examination, as the case may be, and it will be sent back to him (the candidate), who will have to send it, together with the examination fee, to the Registrar of the University *direct*. School-masters are not required to pay any fee for getting their application for permission to appear at either of the abovementioned examinations countersigned by this office.

2. Candidates should read carefully the form of the certificate which this office is required to sign, and should be careful to supply all information and documents required, including the Registrar's receipt in the case of those school-masters who have been admitted to a former examination of the same class, without which the Inspector must decline to sign the certificate.

3. By *bonâ fide* masters of schools are to be understood masters who hold regularly paid appointments in English schools, teaching at least the M.E. course.

JALPAIGURI,
The 4th August 1902.

N. L. HALIWARD,
Offg. Inspector of Schools, Rajshahi Division.

Rajshahi Divisional Inspector's Office Memo.

UNIVERSITY ENTRANCE EXAMINATION.

PRIVATE STUDENTS.

1. *Private students* are those who do not appear from any school or who have been transferred from one school to another after the 31st August without the consent of the Inspector. The term 'private student' includes *school-masters*.

2. Private students must appear at the test-examination of one of the following institutions:—

Those from the—	At the test-examination of—	Date of test-examination.
1	2	3
1. Rajshahi district...	Rajshahi Collegiate School (with the Principal's permission).	On the dates fixed by the Principal of the Rajshahi College.
2. Pabna ,, ...	Pabna Zilla School ...	15th December 1902.
3. Bogra ,, ...	Bogra ditto ...	
4. Rangpur ,, ...	Rangpur ditto ...	
5. Dinajpur ,, ...	Dinajpur ditto ...	
6. Jalpaiguri ,, ...	Jalpaiguri ditto ...	
7. Darjeeling ,, ...	Darjeeling High School ...	

The examinations will begin as stated above, and each private student will pay a fee of Rs. 2 to the head of the institution at which he appears for examination. The balance after payment of expenses (stationery, etc.) will go as remuneration to the examiners.

3. Applications for permission to appear must be sent so as to reach *this office* not later than the 24th November with the following information, etc.—

From Private Candidates proper.

(*a*) The name of the school in which the candidate last studied.
(*b*) The transfer certificate (in original) granted to the candidate from the same; or
(*c*) In the case of a candidate who previously appeared at the Entrance examination, the Registrar's receipt (in original) for the fee paid.
(*d*) Age of the candidate.

From School-masters.

(*e*) A certificate from the Secretary or Proprietor of the school in which the candidate is serving to the effect that he has been a *bonâ fide paid* teacher of the school in which he teaches, and has been so ever since the 1st June 1902. In case of a school-master who has served *in more than one school*, he must produce certificates from the several schools in proof of his having been a *bonâ fide paid* teacher all along since the 1st June 1902.

Failing to produce the above certificate or certificates, a school-master will be subject to the rules applicable to *bonâ fide* private candidates, as given above.

4. If this office is satisfied that all is in order, the Inspector will countersign and return the application, and this then will be the candidate's passport for admission *to the test-examination.*

5. The Head Master of an institution (one of those named above) should direct private students to appear before him not later than the 2nd January with their applications for admission to the Entrance examination, and in the case of those candidates who have satisfied the test, he will cause them to sign their application forms in his presence, and will grant the necessary certificates, and then forward the applications to this office for countersignature, after which they will be sent by the Inspector *direct* to the candidates.

6. Expedition is necessary in carrying out all these instructions, and candidates should be *most careful* to give their names and addresses written legibly and distinctly, so that no mistake may be likely to occur.

7. *Under no circumstances should the entrance fee be sent to this office.*

8. Private students will understand that the test-examination of any schools other than those named above will not be accepted by this office.

9. Addresses of private students should be supplied to this office.

JALPAIGURI,
The 4th August 1902.

N. L. HALLWARD,
Offg. Inspector of Schools, Rajshahi Division.

DACCA DIVISION.

UNIVERSITY ENTRANCE EXAMINATION.

Private Students.

1. Private students are those who do not appear from any school, or who have been transferred from one school to another after the 31st August without the consent of the Inspector of Schools. The term "private students" includes school masters.

2. Private students desirous of being sent up to the ensuing University Entrance examination must appear at the Test examination of one of the undermentioned schools:—

(1) Dacca Collegiate School.
(2) Mymensingh Zilla School.
(3) Faridpur Zilla School.
(4) Barisal Zilla School.

3. The Test examinations of the zilla schools will be held on the 17th December 1902 and the following days. The date of examination of the Collegiate School should be ascertained from the Head Master of that school.

4. Every private candidate must submit his application to the Head Master of one of the schools named above at least three weeks before the Test examination, and satisfy the following conditions:—

(*a*) that he has not failed at the Test examination of any Entrance school during the current session;

(*b*) that he has not left school from any class lower than the first; and

(*c*) that he has left the school in which he last read with a transfer certificate, or (in case of a candidate who appeared at any previous examination) he is in possession of the Registrar's receipt.

A school master is required to produce a certificate from the Secretary to the school in which he has served as a *bonâ fide* teacher for a period not less than six months.

5. Every private candidate must pay a fee of Rs. 2 to the Head Master of the school at which he appears for examination. After payment of the necessary expenses, the balance of fees will be paid to the examiners as remuneration.

6. He must be accompanied, for the purpose of identification, by some person known to the officer conducting the examination, and satisfy him as to his character.

7. The Head Masters of the schools named above are authorized to sign the application forms of eligible candidates, which should be forwarded to this office for countersignature and transmission to the Registrar of the University of Calcutta in due time.

8. Private candidates should arrange to remit their examination fees together with the application forms direct to the Registrar.

F.A. AND B A. EXAMINATIONS.

1. Deputy Inspectors of Schools, Sub-Inspectors of Schools, and *bonâ fide* teachers of recognised English schools will be admitted to the F.A. and B A. examinations as private candidates, provided they have served in their respective capacities for a period of two academical years.

Bonâ fide teachers are those who hold paid appointments in English schools teaching at least the middle English standard.

2. Exceptions to the above rule will be made in case of those candidates who, after failure at a previous examination, have served for six months since the date of the examination. If, however, a candidate does not complete six months' service at the time of submitting his application, he must satisfy this office that he will stick to the post till he completes six months' service before the examination.

3. School masters should submit, with their applications, certificates of character and length of service from the Secretaries of their respective schools, and also the University certificates, in proof of their having passed the Entrance or F.A. examination, as the case may be. They should fill up their application forms carefully, giving all the necessary informations, and sign them in the presence of the Secretary or a member of the Managing Committee of the school. Candidates who were admitted to a previous examination should produce the Registrar's receipt in addition.

4. Applications must reach this office on or before the 6th January 1903.

5. Fees should be remitted by the candidates direct to the Registrar of the University of Calcutta, together with the application forms countersigned by the Inspector of Schools, so as to reach the office of the Registrar on or before the 2nd February 1903.

DACCA,
The 5th August 1902.

MOTHURA NATH CHATTAPADHYA,
Inspector of Schools, Dacca Division.

NOTICE.

Entrance Examination.

A TEST examination of private students and school-masters for admission to the ensuing Entrance Examination will be held at the office of the Inspector of Schools, Presidency Division, 4 Dalhousie Square, Calcutta, on Monday the 15th, and Tuesday the 16th December 1902. Such candidates only as reside in any of the districts of the Presidency Division, including Calcutta, will be admitted to the examination.

2. Candidates who do not appear from any school, *i.e.*, who have not attended any school since the 1st of September next preceding the examination, will be treated as private students. They will be required to furnish satisfactory proof that they have not read in any school from that date. They must also produce certificates of conduct and progress in studies from the authorities of the last school where they read, or, in the case of those who have not been in any school for more than a year, from some other reliable authorities. The transfer certificates granted to them by the authorities of the schools in which they studied last, or the Registrar's receipt for the fee paid in the case of those candidates who previously appeared at the Entrance Examination, must be submitted in original along with the application for permission to appear at the test examination.

3. *Bonâ fide* teachers employed in any of the schools in the Presidency Division may be admitted to the examination if they can produce certificates of service and character from their employers, or from the Deputy Inspector of the district concerned.

4. Each candidate should submit to this Office, not later than the 28th November 1902 his application for admission to the test examination, stating the following particulars :—

(1) Age; (2) residence; (3) father's name; (4) second language besides English; and (5) whether he appeared at any previous Entrance Examination.

5. The admission-fee for the examination is Rs. 4 for each candidate, and is to be remitted with the application within the prescribed date, after which a fine of Rs. 2 is to be imposed for each week's delay.

6. No private student will be admitted to the test examination unless accompanied, for the purpose of identification, by some person known to this Office.

7. Candidates who are sent up by this Office must appear at the Calcutta Examination Centre.

8. Those who reside at a distance from Calcutta may present themselves at the test examination held by the head-master of the nearest zilla or Government high school within the Presidency Division, on condition that they appear at the centre selected by the candidates from that institution. The head-master of such school is hereby authorised to sign the applications of these students, which must afterwards be countersigned by the Inspector. The fees and fines paid by such students, as per paragraph 5 above, should be utilized in meeting the cost of the examination.

9. The Entrance Examination in 1903 will be held on the 2nd March 1903 and the following days.

10. Applications and fees for admission to the examination must reach the office of the Registrar on or before the 22nd January 1903.

F.A. and B.A. Examinations.

Deputy Inspectors, Sub-Inspectors, and *bonâ fide* teachers of English schools in the Presidency Division who have served as such for full two academical years, or for six months in the case of those who were admitted to a former examination of the same class, will be admitted to the above examinations on production of certificates of character and length of service (with dates) from their employers Their applications must reach this Office on or before the 12th January 1903.

2. Candidates for the B.A. Examination must send their F.A. Certificates, and candidates for the F.A. Examination, their Entrance Certificates.

3. Candidates should carefully read the printed form of application and supply all the informations required by the University, including the Registrar's receipt in the case of those school-masters who were admitted to a previous examination of the same class.

4. The F.A. and B.A. Examinations in 1903 will be held on the 16th March 1903 and the following days

5. Applications and fees for admission to the above examinations must reach the office of the Registrar on or before the 2nd February 1903.

4, DALHOUSIE SQUARE, CALCUTTA: } P. MUKERJI,
The 6th August 1902. } *Offg. Inspector of Schools, Presidency Division.*

NOTIFICATIONS OF THE BOARD OF REVENUE.

No. 657A.

NOTIFICATION.

LAND REVENUE.

(Bengal Tenancy Act.)

THE HON'BLE MR. C. W. BOLTON, C.S.I.

Dated Calcutta, the 16th August 1902.

THE price-lists of staple food-crops in the local areas of Bengal, prepared under section 39 (1) of the Bengal Tenancy Act, VIII of 1885, for the period from the 1st of January to the 31st of March 1902, having been approved by the Board of Revenue, are published for general information, under sub-section 4 of that section.

By order of the Board of Revenue, L. P.,

A. EARLE,
Offg. Secretary.

Price-list (retail) of staple food-crops in the local areas of Bengal, prepared under section 39 of the Bengal Tenancy Act, VIII of 1885 for three months, from January to March 1902.

BURDWAN DIVISION.

1	2	3	4	5	6	7	8	9	10
District.	Local areas.	Mart at which prices were taken.	Staple food-crop or crops.	Market days for the preparation of price-lists.	Quantities per rupee in seers of 80 tolas, Company's weight.			Average price for the quarter ending the 31st March 1902.	Remarks.
					January.	February	March.		
					S. c.	S. c.	S. c.	S. c.	
Burdwan ...	Sadar subdivision ...	Burdwan ..	Rice	Last day of the month ...	12 0	12 12	12 0	12 4	
	Raniganj ditto ..	Raniganj ...	Do.	27th of the month	13 0	13 0	13 8	13 2½	
	Katwa ditto ...	Katwa ...	Do.	Ditto	12 10	13 2	13 2	12 15½	
	Kalna ditto ..	Kalna ..	Do.	28th of every month	11 7	11 13	11 1	11 7	
Birbhum ...	Sadar ditto ...	Suri ...	Do.	Last day of each month ...	12 12	13 8	13 8	13 4	
	Rampur Hat ditto ..	Rampur Hat ...	Do.	Ditto	12 6	13 0	12 12	12 11½	
Bankura ...	Sadar ditto ..	Bankura ...	Do.	Last day of the month ..	15 0	15 0	15 0	15 0	
	Vishnupur ditto ...	Vishnupur ...	Do.	Ditto	14 0	14 0	14 0	14 0	
Midnapore ...	Sadar ditto .	Midnapore ...	Do.	Last day of each month ...	14 8	14 0	14 4	14 4	
	Ghatal ditto ...	Ghatal ...	Do	27th of every month	14 12	14 0	14 0	14 4	
	Tamluk ditto ..	Tamluk ..	Do.	3rd Wednesday of every month.	12 4	12 3	12 12	12 6½	
	Contai ditto ...	Contai ...	Do.	Any market day from 27th to 30th of every month.	16 0	16 0	14 0	16 0	
Hooghly ...	Sadar ditto ...	Hooghly ...	Do.	Last Thursday of each month	9 10	11 8	11 3	10 12½	
	Serampore ditto ..	Bhadreswar ..	Do.	Ditto	0 4	10 0	10 3	9 13	
	Arambagh ditto ..	Jahanabad ...	Do.	Ditto	13 5	14 5	14 8	14 ¾	
	Howrah ditto ...	Mohisree ...	Do.	Ditto	10 14	11 6	11 6	11 3½	
	Ulubaria ditto .	Ulubaria ...	Do.	Ditto	11 0	11 0	11 0	11 0	

PRESIDENCY DIVISION.

					S. c.	S. c.	S. c.	S. c.	
24-Parganas ...	Diamond Harbour subdivision.	Mugra Hat ..	Rice	Last market day which immediately precedes the last Saturday of every month.	13 14	13 5	13 5	13 8	
	Sadar subdivision ...	Chotla Hat ..	Do.	Last Saturday of every month	11 6	12 6	11 9	11 10½	
	Barasat ditto	Barasat	Do.	Last market day which immediately precedes the last Saturday of every month.	10 0	11 0	12 0	11 0	
	Basirhat ditto ...	Baduria Baraon ...	Do.	Ditto	12 11	12 15	13 8	13 ¾	
Nadia ...	Kushtia ditto ...	Bahadurkhali ...	Do.	28th of each month	10 0	10 0	11 0	10 5½	
	Meherpur ditto ...	Kaliabazar ...	Do.	Ditto	12 0	11 8	11 4	11 9½	
	Chuadanga ditto ...	Chuadanga	Do.	Saturday immediately preceding the 28th of each month. *Aman*	11 5	11 5	11 5	11 5	
				Aus	12 8	12 8	11 5	12 1½	
	Sadar ditto ...	Goaree ...	Do.	Last day of each month ...	10 10	10 10	11 7	10 14½	
	Ranaghat ditto ...	Ranaghat ...	Do.	28th of each month .. *Aman*	10 0	10 8	10 8	10 5½	
				Aus	13 0	13 5	12 5	12 14	
Murshidabad	Sadar ditto ..	Berhampore ...	Do.	28th of every month	12 5	13 5	12 11	12 12½	
	Lalbagh ditto ..	Lalbagh .	Do.	1st Monday of each month .	11 4	11 12	12 0	11 10½	
	Jangipur ditto ..	Jangipur ...	Do.	Market day which falls immediately before the 28th of each month.	12 8	12 8	12 10	12 8½	
	Kandi ditto	Kandi ...	Do.	Ditto	13 10	14 8	14 0	14 ¼	
Jessore ...	Jhenida ditto ...	Jhenida ..	Do.	Thursday or Sunday falling on or next before the 28th of every month except February, in which the Thursday falling on or next before the 26th. *Aman*	12 0	12 12	12 12	12 8	
	Magura ditto ...	Magura ...	Do.	Ditto	12 0	13 0	13 0	13 0	
	Sadar ditto ..	Jessore ...	Do.	Monday or Friday falling on or next before the last day of every month. *Aman*	12 13	11 11	12 3	12 3½	
	Narail ditto ...	Narail ...	Do.	Thursday or Sunday falling on or next before the 28th of every month except February, in which the Thursday falling on or next before the 26th.	12 5	12 0	12 0	12 1½	
	Bangaon ditto ...	Bangaon ...	Do.	Monday or Friday falling on or next before the 28th of every month except February, in which the Monday or Friday falling on or next before the 26th. *Aus*	12 5	12 5	12 5	12 5	

PRESIDENCY DIVISION—*concluded.*

1	2	3	4	5	6	7	8	9	10
District.	Local areas.	Marts at which prices were taken.	Staple food-crop or crops.	Market days for the preparation of price-lists.	Quantities per rupee in seers of 80 tolas, Company's weight.			Average price for the quarter ending the 31st March 1902.	Remarks.
					January.	February.	March.		
					S. C.	S. C.	S. C.	S. C.	
Khulna ...	Sadar subdivision ...	Khulna ...	Rice	Last market day of every month.	12 4	12 13	13 10	12 9	
	Satkhira ditto ...	Satkhira ...	Do.	28th of every month except February, when the price will be taken on the 26th.	10 8	11 8	11 8	11 2½	
	Bagerhat ditto ...	Bagerhat ...	Do.	Wednesday falling on or before the 28th of every month except February, when the price will be taken on the Wednesday falling on or before the 26th.	13 6	13 4	14 1	13 9	

RAJSHAHI DIVISION.

					S. C.	S. C.	S. C.	S. C.	
Rajshahi ...	Sadar subdivision	Boalia ...	Rice	Last day of every month ...	11 4	12 6	12 0	11 14	
	Naugaon ditto ...	Naugaon ...	Do.	Ditto	13 0	12 12	12 12	12 8	
	Nator ditto ...	Nator ...	Do.	Ditto	12 0	12 12	12 0	12 4	
Dinajpur ...	District of Dinajpur ...	Railway Bazar Hát.	Do.	Last market day of every month.	11 9	12 0	13 0	12 3	
Jalpaiguri ...	Sadar subdivision	Dinbazar ...	Do.	15th of every month	11 12	12 8	12 12	12 5½	
Rangpur ...	Sadar ditto ...	Rangpur ...	Do.	Last Wednesday or Saturday, whichever may be next to the last day of the month.	12 0	12 0	12 0	12 0	
	Nilphamari ditto ...	Nilphamari ...	Do.	Last Wednesday or Sunday, whichever may be close to the 28th of every month.	8 0	13 0	13 0	11 5½	
	Kurigaon ditto ...	Kurigaon ...	Do.	Last Saturday or Tuesday next to the 28th of every month.	10 8	10 8	10 8	10 8	
	Gaibanda ditto ...	Gaibanda ...	Do.	27th of every month	12 4	12 8	12 12	12 8	
Bogra	District of Bogra ...	Bogra ...	Do.	Last Sunday of each month ...	12 12	12 12	12 12	12 12	
Pabna	Do. of Pabna ...	Pabna ...	Do.	15th of every month	11 3	11 10	11 4	11 5½	

DACCA DIVISION.

					S. C.	S. C.	S. C.	S. C.	
Dacca ...	Narayanganj subdivision	Madanganj ...	Rice	Last market day before the 13th day of each month	10 0	10 0	10 0	10 0	
	Sadar ditto ...	Dacca	Do.	Last market day of every month.	11 9	12 1	12 0	11 14	
	Manikganj ditto ...	Manikganj ...	Do.	Market day falling on or immediately before the 28th of every month.	11 1	11 6	11 10	11 5½	
	Munshiganj ditto ...	Mirkadim ...	Do.	Last Sunday of every month	11 8	12 0	12 4	11 14½	
Mymensingh	Jamalpur ditto ...	Jamalpur ...	Do.	Last market day of the 3rd week of every month.	11 12	12 12	12 4	12 4	
	Tangail ditto ...	Kagmari ...	Do.	Ditto	10 5	11 3	11 10	11 [illegible]	
	Netrakona ditto ...	Netrakona ...	Do.	Ditto	13 3	13 2	13 2	13 13	
	Sadar ditto ...	Nasirabad ...	Do.	Ditto	11 6	11 6	11 6	11 6	
	Kishoreganj ditto ...	Kishoreganj ...	Do.	Ditto	11 11	11 11	11 11	11 11	

DACCA DIVISION—*concluded.*

1	2	3	4	5	6	7	8	9	10
DISTRICT.	Local areas.	Marts at which prices were taken.	Staple food-crop or crops.	Market days for the preparation of price-lists.	QUANTITIES PER RUPEE IN SEERS OF 80 TOLAS, COMPANY'S WEIGHT.			Average price for the quarter ending the 31st March 1902.	REMARKS.
					January.	February.	March.		
					S. C.	S. C.	S. C.	S. C.	
FARIDPUR ...	Sadar subdivision	Faridpur ...	Rice	The last market day of the month.	10 12	10 13	10 14	10 13	
	Madaripur ditto ...	Madaripur ..	Do.	On the market day preceding the 28th of each month.	12 0	12 0	12 0	12 0	
	Goalundo ditto ..	Goalundo ...	Do.	Ditto	11 6	11 6	11 6	11 6	
BAKERGUNGE	Patuakhali ditto ...	Patuakhali ...	Do.	Last market day preceding the last day of the month.	10 15	11 15	11 14	11 9½	
	Pirojpur ditto ..	Pirojpur ...	Do.	Ditto	10 10	10 10	10 10	10 10	
	Sadar ditto ..	Barisal ...	Do.	Last day of the month *Aman*	12 0	12 0	12 0	12 0	
	Dakhin Shahbazpur subdivision.	Bhola ...	Do.	Last market day preceding the last day of the month.	11 4	11 0	11 7	11 3½	

CHITTAGONG DIVISION.

					S. C.	S. C.	S. C.	S. C.	
TIPPERA ...	Brahmanbaria subdivision.	Brahmanbaria .	Rice	Market day immediately preceding the 28th of the month.	12 0	12 5	12 0	12 1½	
	Sadar subdivision ...	Comilla ...	Do.	Last market day of the month	12 0	12 0	12 0	12 0	
	Chandpur ditto ..	Chandpur ...	Do.	Market day immediately preceding the 28th of the month	11 12	12 1	12 7	12 1½	
NOAKHALI ...	Sadar ditto ...	Kalitara Hát ...	Do.	Last market day of each month	13 3	12 13	12 15	12 15½	
	Fenny ditto ...	Fenny Hát ...	Do.	Ditto	14 15	14 13	14 9	14 12½	
CHITTAGONG	Sadar ditto ..	Chittagong ...	Do.	Last Saturday of the month ...	12 10	12 10	13 0	12 12	
	Cox's Bazar ditto ...	Cox's Bazar ...	Do.	Friday immediately preceding the 26th, or the 28th, if that day happens to be a Friday.	15 0	14 0	16 0	15 0	

PATNA DIVISION.

					S. C.	S. C.	S. C.	S. C.	
PATNA ...	Sadar subdivision, excluding thana Maner.	Maruſganj ...	*Makai* upland ...	28th of each month	22 0	22 12	24 8	23 1½	
			Rice lowland ...		13 8	13 1	13 4	12 15	
	Dinapore subdivision, with thana Maner.	Dinapore ...	Barley up-land ...	Ditto	20 0	20 0	21 8	20 8	
			Rice lowland ...		12 8	13 0	13 8	13 0	
	Barh subdivision ...	Barh ..	*Makai* upland ...	Ditto	20 8	20 8	22 0	21 0	
			Rice lowland ...		11 10	12 8	12 0	12 ½	
	Bihar ditto ...	Bihar ...	Wheat upland ...	Ditto	11 8	12 0	11 8	11 10½	
			Rice lowland ...		11 8	11 8	11 8	11 8	
GAYA ...	Sadar ditto ...	Gaya ...	Wheat upland ...	Last day of the month ...	12 13	12 11	12 2	12 8½	
			Rice lowland ...		12 2	12 5	11 12	12 1	
	Nawada ditto ...	Nawada ...	Wheat upland ...	Last market day of the month, not being less than two days before the close of the month.	12 0	12 0	12 0	12 0	
			Rice lowland ...		13 0	13 0	13 0	13 0	
	Jahanabad ditto ...	Jahanabad ...	Wheat upland ...	Ditto	12 8	12 8	12 8	12 8	
			Rice lowland ...		12 8	13 0	13 0	12 13½	
	Aurangabad ditto ...	Aurangabad ...	Wheat upland ...	Last market day of the month, being not less than three days before the close of the month. White	12 8	12 8	13 0	12 10½	
				Red	13 8	13 4	13 8	13 6½	
			Rice lowland ...		13 8	13 4	12 12	13 ½	

PATNA DIVISION—*concluded.*

1	2	3	4	5	6	7	8	9	10
District.	Local areas.	Marts at which prices were taken.	Staple food-crop or crops.	Market days for the preparation of price-lists.	Quantities per rupee in seers of 80 tolas, Company's weight.			Average price for the quarter ending the 31st March 1902.	Remarks.
					January.	February.	March.		
					S. c.	S. c.	S. c.	S c.	
Shahabad	Sadar subdivision	Arrah	Wheat upland	1st Saturday of each month	12 0	11 14	12 8	12 2	
			Rice lowland		11 13	12 8	11 13	11 15	
	Buxar ditto	Buxar	Wheat upland	1st Thursday of every month.	14 0 (White)	15 0	15 0	14 10½	
					14 0 (Red)	16 0	16 0	15 5½	
			Rice lowland		11 8	13 0	12 8	12 5½	
	Sasaram ditto	Sasaram	Wheat upland	Ditto	13 6	13 10	13 5	13 7	
			Rice lowland		12 2	13 1	13 0	12 11½	
	Bhabhua ditto	Bhabhua	Wheat upland	Ditto	13 8	14 8	15 8	14 8	
			Rice lowland		11 8	12 8	12 12	12 4	
Saran	Gopalganj ditto	Mirganj	*Makai* upland	Last market day immediately preceding the 15th of each month.	23 14	24 1	24 1	23 10½	
			Rice lowland		12 0	12 0	11 7	11 13	
	Siwan ditto	Siwan	*Makai* upland	Ditto	22 7	22 0	23 0	22 7½	
			Rice lowland		11 3	12 0	13 0	12 1	
	Sadar ditto	Chapra	*Makai* upland	15th of each month	22 0	23 0	22 0	23 5½	
			Rice lowland		10 8	10 15	11 0	10 13	
Champaran	Sadar ditto	Motihari	*Makai* upland	Last day of the month	23 0	23 8	23 8	23 0	
			Rice lowland		12 4	12 12	12 12	12 9½	
	Bettiah ditto	Bettiah	*Makai* upland	Ditto	25 0	25 0	20 0	25 5½	
			Rice lowland		13 8	13 8	13 0	13 5½	
Muzaffarpur	Sitamarhi ditto	Sitamarhi	*Makai* upland	Last Wednesday of every month.	21 0	22 12	24 8	22 12	
			Rice lowland		12 4	12 5	12 13	12 7½	
	Sadar ditto	Muzaffarpur	*Makai* upland	Last day of every month	20 0	21 8	22 0	21 2½	
			Rice lowland		11 8	12 0	12 0	11 13½	
	Hajipur ditto	Hajipur	*Makai* upland	3rd day from the end of the month.	22 0	23 0	23 8	22 13½	
			Rice lowland		11 8	11 10	11 12	11 10	
Darbhanga	Madhubani ditto	Madhubani	*Murwa* upland	28th of each month, except in February, when it will be 26th.	19 6	19 6	18 12	19 2½	
			Rice lowland		13 0	13 10	12 4	12 15½	
	Sadar ditto	Darbhanga	*Murwa* upland	Last day of each month	19 12	20 14	22 0	20 14	
			Rice lowland		12 0	12 2	12 0	12 0½	
	Samastipur ditto	Samastipur	*Makai* upland	28th of each month, except in February, when it will be 26th.	21 0	22 8	21 8	21 10½	
			Rice lowland		11 8	12 0	12 0	11 13½	

BHAGALPUR DIVISION.

					S. c.	S. c.	S. c.	S. c.	
Monghyr	Sadar subdivision	Monghyr	Wheat upland	Last day of every month	13 10	13 10	15 12	14 5½	
			Rice lowland		12 9	12 9	11 8	12 3½	
	Begusarai ditto	Begusarai	Wheat upland	25th of every month	12 10	12 10	12 0	12 6½	
			Rice lowland		13 1	12 10	12 0	12 3½	
	Jamui ditto	Jamui	Wheat upland	29th of every month	12 0	13 0	12 0	12 10½	
			Rice lowland		12 0	12 0	12 0	12 0	
Bhagalpur	Sadar ditto	Bhagalpur	*Makai* upland	The date preceding the close of the month.	...	...	...	...	
			Rice lowland		12 0	12 5	12 10	12 5	
	Supaul ditto	Supaul	*Murwa* upland	The hát day that falls between the 24th and 27th of the month.	21 8	22 0	23 0	22 2½	
			Rice lowland		13 0	13 4	14 0	13 6½	
	Madhipura ditto	Madhipura	*Murwa* upland	The last hát day in the month but one.	28 12	28 0	26 0	27 9½	
			Rice lowland		15 6	14 0	14 0	14 7½	
	Banka ditto	Banka	*Makai* upland	Ditto	17 8	17 8	17 8	17 8	
			Rice lowland		13 12	13 8	13 8	13 14½	

BHAGALPUR DIVISION—*concluded.*

1	2	3	4	5	6	7	8	9	10
DISTRICT.	Local areas.	Marts at which prices were taken.	Staple food-crop or crops.	Market days for the preparation of price-lists.	QUANTITIES PER RUPEE IN SEERS OF 80 TOLAS, COMPANY'S WEIGHT.			Average price for the quarter ending the 31st March 1902.	REMARKS.
					January.	February.	March.		
					S. C.	S. C.	S. C.	S. C.	
PURNEA ...	Araria subdivision ...	Araria	Wheat upland ...	Last market day of the month.	13 0	14 0	16 0	14 5½	
			Rice lowland ...		13 0	13 0	13 0	13 0	
	Kishanganj ditto ...	Kishanganj ...	Wheat upland ...	Ditto ...	9 0	0	9 0	9 0	
			Rice lowland ...		10 0	10 8	10 8	10 5½	
	Sadar ditto ...	Beamsganj ...	Wheat upland ...	Ditto ...	14 0	13 0	12 0	13 10½	
			Rice lowland ...		10 8	11 0	11 0	10 13½	
MALDA ...	District of Malda ...	Balia Nawabganj	Rice ...	Second Wednesday of each month.	11 0	11 8	13 8	12 0	

ORISSA DIVISION.

					S. C.	S. C.	S. C.	S. C.	
CUTTACK ...	Sadar subdivision ...	Cuttack town ...	Rice	1st Sunday of each month ...	14 15	16 3	15 7	15 8½	
	Kendrapara ditto ...	Kendrapara ,, ...	Do.	Ditto	15 13	16 12	17 1	16 3	
	Jajpur ditto ...	Jajpur ,, ...	Do.	Ditto	14 7	15 13	15 12	15 5	
	Banki ditto ...	Charchika Hát ...	Do.	1st Tuesday of each month ...	20 2	19 2	15 7	18 3½	
BALASORE ...	Bhadrak ditto ...	Bhadrak ...	Do.	1st Wednesday of every month	17 0	18 8	18 0	17 15½	
		Chandbali ...	Do.	1st Thursday of every month	16 0	19 8	18 0	17 13½	
	Sadar ditto ...	Balasore ...	Do.	1st Saturday of every month...	14 8	16 0	15 4	15 4	
PURI ...	Sadar ditto ...	Puri ...	Do.	The 8th of every month ...	14 7	17 11	15 0	15 11½	
	Khurda ditto ...	Khurda ...	Do.	Ditto	18 6	17 11	15 12	17 4½	

NOTIFICATION—No. 2047B.

Dated Calcutta, the 2nd August 1902.

CUSTOMS.

THE HON'BLE MR. BOURDILLON, C.S.I.

Grant of rewards to Customs and other officers.

IN supersession of rules 10 and 11 issued under the provisions of the Sea Customs Act, VIII of 1878, and published at pages 31-32, Part I of the *Calcutta Gazette* of the 14th January 1885, the following revised rules which have been approved by the Government of India are published for general information.

By order of the Board of Revenue, L. P.,

H. WHEELER,
Secretary.

10. To officers of Customs or other persons, who are instrumental in detecting and bringing to notice infringements and evasions of the provisions of the Sea Customs Act, or of the Indian Merchandise Marks Act, rewards may, when it is considered that they are merited, be given in the following cases in which goods may be confiscated, or a penalty or fine imposed:—

(*a*) Smuggling or attempted importations of articles contrary to the provisions of section 18 or 19 of the Sea Customs Act.

(*b*) Breaches or attempted breaches of the provisions of the Sea Customs Act or of rules made thereunder when such breaches were probably intended to facilitate the importation or exportation of dutiable goods, or the removal of goods from bond without payment of full duty thereon.

(*c*) Breaches of the provisions of the Indian Merchandise Marks Act.

(*d*) False declaration of the contents of packages in regard to sort, quality, quantity, value, or other conditions.

(*e*) Undervaluation in a bill-of-entry or understatement of quantity in a shipping bill, affecting the amount of duty chargeable where such undervaluation or understatement is solely the result of accident or error.

11. (*a*) In each case the reward shall not exceed one-half of the realised value of the confiscated goods (if any), and of the penalty or fine imposed, and shall be so restricted that the balance shall suffice to cover all outstanding Government dues (if any), and any incidental charges incurred in consequence of the seizure of the goods.

(*b*) If, however, in any case the value of the confiscated goods, or the penalty or fine imposed, is not realised, or is only realised in part, and if the aggregate sum realised appears to be insufficient for the purpose of rewarding the officer of Customs and other person or persons who have been instrumental in detecting and bringing to light the case, the Chief Customs Authority, on the recommendation of the Customs Collector, may grant such reward or rewards not exceeding in the aggregate one-half of the estimated value of the confiscated goods (if any) and of the penalty or fine as he may think reasonable.

11A. The adjudication of rewards shall, in all cases, be made by the Chief Customs Officer. No reward shall be paid until three months have elapsed from the date of the confiscation of the goods or infliction of the penalty with reference to which it is to be paid. The payment to any person or persons in any case of a reward or rewards under these rules exceeding in the aggregate Rs. 500 shall require the previous sanction of the Local Government.

No. 1994B.

NOTICE is hereby given that the Ninth Sale of Opium, the Provision of 1900-1901' will be held at the Government Opium Sale-room, No. 2 Bankshall Street, on Monday' the 1st September 1902, at 11 A.M., and will comprise 4,000 chests, viz.—

		Chests.
Opium manufactured at the Patna Factory, consisting of	...	2,000
Opium manufactured at the Ghazipur Factory, consisting of	...	2,000
Total	...	4,000

2nd.—The general conditions of the sale now advertised will be the same as usual. They may be ascertained by reference to the Notification issued on the 19th November 1901, and published in the *Government* and *Exchange Gazettes*, or on personal application at the office of the Board of Revenue.

3rd.—The latest dates for deposit and clearance will be the 6th and 16th September 1902, respectively, that is to say, no Bank of Bengal Receipts, Government Promissory Notes or other Public Securities that may be tendered for deposit in redemption of Promissory Notes given by purchasers in the sale-room will be received after 1-30 P.M. of Saturday, the 6th September 1902, and no Bank of Bengal Receipts in full payment of lots will be accepted after 3-30 P.M. of Tuesday, the 16th September 1902.

4th.—In addition to the quantity above advertised for sale, the following quantities, more or less, of the Opium manufactured at the Patna and Ghazipur Factories will be brought to sale down to December next on or about the dates specified below. The Board of Revenue, however, reserve to themselves the right of altering these dates, should circumstances render it expedient to do so :—

DATES.	Manufactured at the Patna Factory; about chests.	Manufactured at the Ghazipur Factory; about chests.	Total; about chests.
On or about Monday, 29th September 1902 ...	2,000	2,000	4,000
On or about Monday, 3rd November " ...	2,000	2,000	4,000
On or about Monday, 1st December " ...	2,000	2,000	4,000
Total ...	6,000	6,000	12,000

By order of the Board of Revenue, L. P.,

H. WHEELER, *Secretary.*

BOARD OF REVENUE, L. P., CALCUTTA, *the 29th July 1902.*

ELECTION OF MUNICIPAL COMMISSIONERS.

NOTIFICATION.

In modification of this office notification dated the 29th July 1902, published at page 1098, Part I of the *Calcutta Gazette*, dated the 6th August 1902, it is hereby notified for general information that a bye-election will be held in Ward No. F of the Jamalpur Municipality, in the district of Monghyr, on Monday, the 20th October 1902, for the election of two Municipal Commissioners in places of Mr. J. J. Hatt and Mr. J. Dunboylan, resigned.

H. C. WILLIAMS, *Commissioner.*

COMMR.'S OFFICE, BHAGALPUR, *the 12th August 1902.*

NOTIFICATION.

It is hereby notified for general information that a bye-election will be held in Ward No. III of the Midnapore Municipality, in the district of Midnapore, on Saturday, the 13th September 1902, to fill up the vacancy caused by the removal of Babu Durga Das Rakhit, one of the elected Commissioners of the Municipality.

R. CARSTAIRS, *Commissioner.*

COMMR.'S OFFICE, BURDWAN DIVN., CAMP MIDNAPORE, *the 13th August 1902.*

NOTIFICATION.

It is hereby notified for general information that a bye-election will be held in the Tamluk Municipality, in the district of Midnapore, on Saturday, the 20th September 1902, to fill up the vacancy caused by the removal of Babu Pramatha Nath Adhikari, one of the elected Commissioners of the Municipality.

R. CARSTAIRS, *Commissioner.*

BURDWAN DIVN., COMMR.'S OFFICE, CAMP MIDNAPORE, *the 14th August 1902*

The Calcutta Gazette.

WEDNESDAY, AUGUST 20, 1902.

PART IB.

ORDERS BY THE LIEUT.-GOVERNOR OF BENGAL.

MUNICIPAL AND LOCAL.

NOTIFICATIONS.

No. 2253M.—The 12th August 1902.—It is hereby notified that, under section 27 of the Bengal Municipal Act, III of 1884, as modified up to 1st November 1896, the Lieutenant-Governor is pleased to appoint the following gentlemen to be Commissioners of the Ranchi Municipality, in the district of Ranchi:—

Ranchi.

Mr. J. Leslie, *vice* Revd. F. C. Boyd.
Babu Charu Chandra Chatterjee, *vice* Mr. J. A. Craven.

No. 2258L.S.-G.—The 13th August 1902.—It is hereby notified that the Lieutenant-Governor is pleased to approve the election by the members of the Sadar Local Board, in the district of Monghyr, under section 25 of the Bengal Local Self-Government Act, III of 1885, of Babu Tara Prasanna Banerjee to be their Chairman.

Monghyr.

No. 2266M.—The 14th August 1902.—Whereas a notification No. 83T.M., dated the 19th April 1902, was published at pages 89 and 90, Part IB of the *Calcutta Gazette* of the 23rd idem, declaring the intention of the Lieutenant-Governor to exclude from the area of the Monghyr Municipality that portion of the land known as Hira Deara, which lies between the river Ganges on the north and west, and the villages of Salempur Damdama, Salempur Mokbera, and Mohiuddinpur Mansing on the east, and whereas no valid objections have been raised to the proposal within six weeks from the date of the publication of the above notification within the Municipality, it is hereby notified for general information that, in the exercise of the power vested in the Local Government by section 9A of the Bengal Municipal Act, III of 1884, as modified up to 1st November 1896, and in accordance with the recommendation of the Commissioners of the Monghyr Municipality, made at a meeting, the Lieutenant-Governor sanctions the above proposal.

Monghyr.

The revised boundaries of the Municipality will be as follow:—

On the North—The northern boundaries of the villages of Jawalkita, Madhokita, Harnathpur Karari Arazi Khem Norainpur, Arazi Shampur, Kita Awwal, Mansumah Chuk Ali.

On the South—The southern boundaries of the villages of Mohiuddinpur, Hossanganj, Inglis, Adampur, Chuk Fatima.

On the East—The eastern boundaries of the villages of Chukali, Bakchapra, Sermastpur, Chauramba, Chuk Haji Subhan, Sandalpur, Mirzapur.

On the West—The western boundaries of the villages of Mohiuddinpur Mansing, Salempur Mokbera, Salempur Damdama, Fort (Gird and Andar Killa).

This notification supersedes the orders contained in the Government notification dated 30th March 1875, published at page 399, Part I of the *Calcutta Gazette* of the 31st idem.

Monghyr. *No. 2268M.—The 14th August 1902.*—It is notified for general information that the Declaration No. 1288M., dated the 27th March 1901, published at page 64, Part IB of the *Calcutta Gazette* of the 3rd April 1901, for the acquisition of a plot of land required by the Monghyr Municipality for a trenching ground for the said Municipality, is hereby cancelled.

Faridpur. *No. 2300L.S.-G.—The 15th August 1902.*—It is hereby notified that the Lieutenant-Governor is pleased to approve the election by the members of the Madaripur Local Board, in the district of Faridpur, under section 29 of the Bengal Local Self-Government Act, III of 1885, of Maulvi Abdul Kadir to be their Chairman, *vice* Babu Harish Chandra Rai, resigned.

Hazaribagh. *No. 2302M.—The 16th August 1902.*—It is hereby notified for general information that the Lieutenant-Governor intends, in the exercise of the power vested in the Local Government by section 221 of the Bengal Municipal Act, III of 1884, as modified up to 1st November 1896, and in accordance with the recommendation of the Commissioners of the Giridih Municipality, in the district of Hazaribagh, made at a meeting, to extend the provisions of Part VI of the said Act to the above Municipality, unless good reasons are shown to the contrary within one month from the date of the publication of this notification within the Municipality.

Patna. *No. 2308M.—The 16th August 1902.*—It is notified for general information that the Declaration No. 1391T.M., dated the 16th July 1902, published at page 145, Part IB of the *Calcutta Gazette* of the 23rd idem, for the acquisition of a plot of land required by the Patna Municipality for widening Chaudhri Tola Lane, in the district of Patna, is hereby cancelled.

Mymensingh. *No. 2326M.—The 16th August 1902.*—Whereas a notification No. 498T.M., dated the 17th May 1902, was published at page 107, Part IB of the *Calcutta Gazette* of the 21st idem, declaring the intention of the Lieutenant-Governor to extend the provisions of sections 249 to 253, 268, 275 and 276 of the Bengal Municipal Act, III of 1884, as modified up to 1st November 1896, to the Muktagacha Municipality, in the district of Mymensigh, and whereas no objection has been raised to the proposal within one month from the date of the publication of the above notification within the Municipality, it is hereby notified for general information that, in the exercise of the power vested in the Local Government by section 221 of the Act, and in accordance with the recommendation of the Commissioners of the Muktagacha Municipality, made at a meeting, the Lieutenant-Governor sanctions the extension of the above provisions of the Municipal Act to the said Municipality.

Hazaribagh. *No. 2358M.—The 19th August 1902.*—Whereas a notification No. 1112M., dated the 7th March 1902, was published at page 55, Part IB of the *Calcutta Gazette* of the 12th idem, declaring the intention of the Lieutenant-Governor to sanction the levy by the Commissioners of the Giridih Municipality, in the district of Hazaribagh, of a fee, on the registration, under section 142 of the Bengal Municipal Act, III of 1884, as modified up to 1st November 1896, of carts which are kept or are used in the ordinary course of business within, or which are let for hire within or without, the Municipality and are used in the ordinary course of business within the Municipality at rates not exceeding those mentioned in section 143 of the Act, and whereas no objection has been raised to the proposal within one month from the date of the publication of the above notification within the Municipality, it is hereby notified for general information that, in the exercise of the power vested in the Local Government by section 86 (*b*) of the Act, and in accordance with the recommendation of the Commissioners of the Giridih Municipality, made at a meeting, the Lieutenant-Governor sanctions the above proposal.

Hazaribagh. *No. 2359M.—The 19th August 1902.*—Whereas a notification No. 1111M., dated the 7th March 1902, was published at page 55, Part IB of the *Calcutta Gazette* of the 12th idem, declaring the intention of the Lieutenant-Governor to sanction the levy by the Commissioners of the Giridih Municipality, in the district of Hazaribagh, of a tax, under section 131 of the Bengal Municipal Act, III of 1884, as modified up to 1st November 1896, on carriages and on horses and other animals specified in the fifth schedule of the Act, which are kept or are used in the ordinary course of business within, or which are let for hire within or without, the Municipality and are used in the ordinary course of business within the Municipality at rates not exceeding those mentioned in the said schedule, and whereas no objection has been raised to the proposal within one month from the date of the publication of the above notification within the Municipality, it is hereby notified for general information that, in the exercise of the power vested in the

Local Government by section 86 (*a*) of the Act, and in accordance with the recommendation of the Commissioners of the Giridih Municipality, made at a meeting, the Lieutenant-Governor sanctions the above proposal.

E. W. COLLIN,
Offg. Secy. to the Govt. of Bengal.

DECLARATION.

No. 2296M.—The 14th August 1902.—Whereas it appears to the Lieutenant-Governor of Bengal that land is required to be taken up by Government at the expense of the Calcutta Municipality for a public purpose, viz., for widening Municipal Office Street, it is hereby declared that for the above purpose pieces of land Nos. 6-1 Chowringhee Road, A-1, 1-1, 1-2, 1-4, 1-5, 1-6, 1-7, 1-8, 1-9, 1-10, 1-11, 1-12, 3, 3-1, 3-2, 3-3 Municipal Office Street, and portions of Nos. 7 and 12 Chowringhee Road, and 1, 1-3 and 2 Municipal Office Street, in the town of Calcutta, district 24-Parganas, measuring, more or less, 1 bigha and 6 chitaks only, are required The boundaries of the land are as follows :—

24-Parganas.

On the North—Municipal Office Street;
On the South—Partly Nos. 6-2 Chowringhee Road and 6 Municipal Office Lane and partly the remaining portions of Nos. 7 and 12 Chowringhee Road, and 1, 1-3 and 2 Municipal Office Street;
On the East—Municipal Office Lane; and
On the West—Partly Chowringhee Road and partly the remaining portions of No. 2 Municipal Office Street.

A plan of the land may be inspected at the office of the Commissioners.

This declaration is made, under the provisions of section 6 of Act I of 1894, to all whom it may concern.

E. W. COLLIN,
Offg. Secy. to the Govt. of Bengal.

DECLARATION.

No. 2304M.—The 16th August 1902.—Whereas it appears to the Lieutenant-Governor of Bengal that land is required to be taken up by Government at the expense of the Comilla Municipality for a public purpose, viz, for the extension of the existing burial ground within the Comilla Municipality, in the village of Dakhin Charta, pargana Meherpur, zilla Tippera, it is hereby declared that for the above purpose a piece of land measuring, more or less, 2 bighas, 5 cottahs 9½ chitaks of standard measurement, is required. The land is bounded on the north by Aalimodin and Jainadin's land, on the south by Abdul Khan and Dedar Ali's land, on the east by Nazumadi's land, and on the west by Gopal Pal's land.

Tippera.

A plan of the land may be inspected in the office of the Collector of Tippera.

This declaration is made, under the provisions of section 6, Act I of 1894, to all whom it may concern.

E. W. COLLIN,
Offg. Secy. to the Govt. of Bengal.

DECLARATION.

No. 2322M.—The 16th August 1902.—Whereas it appears to the Lieutenant-Governor of Bengal that land is required to be taken up by Government at the expense of the Calcutta Municipality for a public purpose, viz., for improving the basti to the east of the Municipal Office buildings, it is hereby declared that for the above purpose pieces of land Nos. 4, 5, 6, 6-1, 7, 12 and 14 Jaun Bazar Street, 12 and 13 Dutt's Lane, 8, 9, 10, 11, 11-1, 11-2, 11-3, 11-4, 13 and 14 Free School Street, 1, 2, 3, 3-1, 4, 4-1, 4-2, 4-3, 5, 6, 6-1 and 7 Shib Chunder Dey's Lane, in the town of Calcutta, district 24-Parganas, measuring, more or less, 5 bighas, 19 cottahs and 7 chitaks only, are required. The boundaries of the land are as follow :—

24-Parganas.

PLOT A.

On the North—Jaun Bazar Street,
On the South—A public passage and land required by the Corporation,
On the East—A public passage, and
On the West—Land acquired by the Corporation.

PLOT B.

On the North, East and West—Public passages, and
On the South—Dutt's Lane.

PLOT C.

On the North—Partly Jaun Bazar Street, partly Nos. 9, 10 and 11 and the remaining portions of Nos. 12 and 14 Jaun Bazar Street and partly a common passage,

On the South—Partly a public passage and partly Shib Chunder Dey's Lane,

On the East—Partly Free School Street and a public passage and partly Nos. 8, 9 and 10 Jaun Bazar Street, and

On the West—Partly a public passage and Shib Chunder Dey's Lane and partly the remaining portions of No. 14 Jaun Bazar Street.

A plan of the land may be inspected at the office of the Commissioners.

This declaration is made, under the provisions of section 6 of Act I 1894, to all whom it may concern.

E. W. COLLIN,
Offg. Secy. to the Govt. of Bengal

DECLARATION.

No. 2333M.—The 18th August 1902.—Whereas it appears to the Lieutenant-Governor of Bengal that land is required to be taken up by Government at the expense of the Calcutta Municipality for a public purpose, viz., for a public square, it is hereby declared that for the above purpose pieces of land Nos. 1, Ekbalpore Gully and 22 Ekbalpore Lane, in thana Ekbalpore, district 24-Parganas, measuring, more or less, 7 bighas, 12 cottahs and 13 chitaks, are required. The boundaries of the land are as follow:—

24-Parganas.

On the North—Premises Nos. 39 and 40 Ekbalpore Road,

On the South—Ekbalpore Lane,

On the East—Partly the remaining portions of premises No. 22 Ekbalpore Lane and partly premises Nos. 60, 61, 62-1, 64 and 66 Diamond Harbour Road, and

On the West—Ekbalpore Gully.

A plan of the land may be inspected at the office of the Commissioners.

This declaration is made, under the provisions of section 6 of Act I of 1894, to all whom it may concern.

E. W. COLLIN,
Offg. Secy. to the Govt. of Bengal.

CORPORATION OF CALCUTTA.

PUBLIC NOTICE.

IT is hereby notified that Mr. C. T. Wibley is appointed to be a Commissioner of the Corporation of Calcutta as a representative of the Calcutta Trades Association in place of the Hon'ble Mr. H. Elworthy, who has resigned.

R. T. GREER, *Chairman of the Corporation.*

MUNICIPAL OFFICE, *the 13th August 1902.*

The Calcutta Gazette.

WEDNESDAY, AUGUST 20, 1902.

PART II.

Advertisements.

[N. B.—Advertisements, Notices, &c., intended for insertion in this part of the Gazette cannot be received after Noon on Monday.]

LAND SALE NOTICES.

Advertisement of Sale.

NOTICE is hereby given that the proprietary right of Government, as specified in the conditions of sale below, to the undermentioned estate, situated in the district of Rajshahi, will be put to sale at the Rajshahi Collectorate on the 1st September 1902, corresponding with 16th Bhadra 1309 (B.S.)

The purchaser will be subject to the following conditions of sale:—

Conditions of Sale.

1st.—The estate to be sold to the highest bidder above the upset price, which will be fixed by the Collector at the time of sale. The purchaser of this estate will be considered as the proprietor of the estate, and the entire proprietary right of Government in such estate will be transferred to him, subject to the revenue fixed in perpetuity.

2nd.—The sale to be subject to existing leases and to the rights conferred by the settlement proceedings and by the laws in force, and purchasers to be bound to respect the rights of resident cultivators who have signed the schedule of assessment prepared by the revenue authorities.

3rd.—If the amount of purchase-money do not exceed Rs. 100, the whole amount to be paid down at once.

4th.—If the amount of purchase-money exceed Rs. 100, one-fourth of the amount bid to be immediately deposited. If the balance be not paid by noon of the fifteenth day after the sale, reckoning the day of sale as one, or, if that day be a close holiday, then by noon of the first succeeding office day, the sale is to be cancelled (the sum deposited being forfeited to Government), and the estate to be again put up to sale at the risk of the defaulting purchaser, after issue of advertisement, as in the case of original sale.

Number on the district roll.	Name of estate and pargana.	Approximate area in acres.	Government revenue assessed.	Remarks.
		A. R. P.	Rs. A. P.	
1991	Mauza Bhadum, pargana Mohamanshahi ...	179 3 10½	357 9 6	

Rajshahi Collectorate, the 16th July 1902.

F. R. Roe, Collector.

Notification A.

NOTICE is hereby given, under sections 6 and 13, Act XI of 1859, that the undermentioned estates and shares of estates in the district of Dinajpur will be put up for sale at the office of the Collector of that district on the 24th September 1902 at 12-30 for arrears of revenue and other demands which by law are realisable as arrears of land revenue.

When in columns 5, 7 and 9 of the appended statement it is stated that only a share is to be sold, it is to be understood that a separate account is kept for that share.

Tauzi No.	Name of mahal and pargana.	Sadar jama of whole estate.	Whether the whole estate is to be sold.	If only a share is to be sold, specification of such share or shares.	Names of proprietors of property to be sold.	If only a share is to be sold, the sadar jama of such share.	If the whole estate is to be sold, the arrears due from it.	If only a share is to be sold, the arrears due from it.
1	2	3	4	5	6	7	8	9
143	Durgapur, pargana Debikote.	Rs. A. P. 6,024 13 7	No ...	Residue share 12 annas ... All other shares than that specified will be excluded from the sale.	Dinobundhu Nandi Chaudhuri and others.	Rs. A. P. 5,193 10 2½	Rs. A. P.	Rs. A. P. 44 8 8

Dinajpur Collectorate, the 29th July 1902. J. H. E. GARRETT, Collector.

Notification A.

NOTICE is hereby given, under sections 6 and 13, Act XI of 1859, that the undermentioned estates and shares of estates in the district of Tippera will be put up for sale at the office of the Collector of that district on the 26th September 1902 at 12 o'clock for arrears of revenue and other demands which by law are realisable as arrears of land revenue.

When in columns 5, 7 and 9 of the appended statement it is stated that only a share is to be sold, it is to be understood that a separate account is kept for that share.

Tauzi No.	Name of mahal and pargana.	Sadar jama of whole estate.	Whether the whole estate is to be sold.	If only a share is to be sold, specification of such share or shares.	Names of proprietors of property to be sold.	If only a share is to be sold, the sadar jama of such share.	If the whole estate is to be sold, the arrears due from it.	If only a share is to be sold, the arrears due from it.
1	2	3	4	5	6	7	8	9
285	Taluq Sribatsha Das, pargana Gunanundi.	Rs. A. P. 1,232 11 7	Whole ...	.....	Srimati Monyakhoya Chowdhurani, manager on behalf of minor Harendra Chandra *alias* Har Kumar Pal Chowdhury and others.	Rs. A. P.	Rs. A. P. 18 12 2	Rs. A. P. .....
430	Gazipur Monipur Chur No. 24-71, pargana Maizardi.	1,233 1 0	Do. ...	.....	Kashi Chandra Pal Chowdhury and others.	.....	84 14 4	.....
1926	Char near Nogarerkandi No. 211, pargana Uttershahapur.	1,296 10 9	Do. ...	.....	Ishan Chandra Dutt and others.	.....	202 9 4	.....
1933/21	Pargana Bardakhat Doulatpurjoar: the term is from 1261 to 1316 B.S.	1,379 3 10	Do. ...	.....	Bepra Charan Ghosh and others.	.....	173 1 0	.....
2296	Shonapur Tajpur, pargana Zasira.	870 10 0	Do. ...	.....	Tajammal Ali Chowdhury and others.	.....	200 0 0	.....

Tippera Collectorate, the 26th July 1902. H. W. SCROOPE, Collector.

Notice of Sale for Arrears of Revenue.

NOTICE is hereby given, under section VI, Act XI of 1859, read with Act VII (B.C.) of 1868 and Act II (B.C.) of 1871, that the undermentioned Noabad taluks within the Cox's Bazar khas mahal, in the district of Chittagong, will be put up to public and unreserved sale at the Collector's office of that district on the 2nd September 1902 for arrears and cesses remaining unpaid on the $\frac{25}{26}$th May 1902:—

Name of tenure.	Name of mauza, thana and mahal.	Name of talukdar.	Sadar Jama.		Amount of arrear for which the tenure is to be sold.		
			Rent.	Cesses.	Rent.	Cesses.	Total.
1	2	3	4	5	6	7	8
			Rs. A. P.	Rs. A. P.	Rs. A. P.	Rs. A. P.	Rs. A. P.
47/10—80	Thana Ramoo, mauza Khuruskol, taluk Tajannisa.	Mozaffar Ahmad, son of Asharaf Ali Chowdhuri, of Chowfoldondi.	2,648 8 0	176 13 0	590 6 0	58 15 6	649 5 6
296/280—302	Thana Chakaria, mauza Rajakhali, taluk Bibi Esprak.	Nezamat Ali Chowdhuri, son of Mohammad Rafi Chowdhuri, of Bora Khim.	1,005 10 0	215 12 6	1,578 4 0	431 9 0	2,009 13 0

Chittagong, the 19th July 1902. A. H. VERNEDE, Covtd. Depy. Collr., *for* Collr.

NOTICE is hereby given, under sections 6 and 13, Act XI of 1859, that the undermentioned estate or share of estate in the district of Darbhanga will be put up for sale at the office of the Collector of that district on the 5th September 1902, corresponding with 17th Bhado 1309 Fasli, at 12 A.M. on Friday for arrears of revenue and other demands, which by law are realizable as arrears of land revenue.

When in columns 5, 7 and 9 of the appended statement it is stated that only a share is to be sold, it is to be understood that a separate account is kept for that share. All other shares besides that specified will be excluded from the sale.

Tauzi No.	Name of estate, thana or pargana.	Sadar jama of whole estate.	Whether the whole estate is to be sold.	If only a share is to be sold, specification of such share or shares.	Names of proprietors of property to be sold.	If only a share is to be sold, the sadar jama of such share.	If the whole estate is to be sold, the arrears due from it.	If only a share is to be sold, the share due from it.
1	2	3	4	5	6	7	8	9
11610	Ahiari, pargana Bharmara, thana Darbhanga.	Rs. A. P. 1,831 2 4	Whole ...	.....	Lala Binda Prasad, Lala Shew Charan Lal, Lala Chedi Lal, Lala Sital Prasad, Lala Jagar Nath Prasad, &c.	.....	Rs. A. P. 457 11 9	.....

Darbhanga Collectorate, the 24th July 1902. S. L. MADDOX, Collector.

APPENDIX XXX.

[See Chapter III, Rule 9.]

Advertisement of Sale.

NOTICE is hereby given that the undermentioned plots of land, no longer required by Government, situated along the Assam-Bengal Railway, in the district of Chittagong, will be put up to sale at 11 o'clock on Monday the 22nd September 1902, corresponding with the 6th of Ashwin 1309 B.S., at the Collector's office, Chittagong.

The purchasers of the several plots of land will be subject to the following conditions:—

1st.—The purchasers will have no power to make any excavation on the land nearer than fifteen feet from the Railway fencing, or plough the land closer than three feet from its foundation.

2nd.—If the amount of purchase-money does not exceed Rs. 100, the whole amount must be paid down at once.

3rd.—If the amount of purchase-money exceeds Rs. 100, one-fourth of the amount must be immediately deposited. If the balance be not paid by noon of the fifteenth day after the sale, reckoning the day of sale as one, or if that day be a close holiday, then by noon of the first succeeding office day, the sale shall be cancelled, the sum deposited being forfeited to Government and the lot again put up for sale at the risk of the defaulting purchaser, after issue of advertisement, as in the case of original sale.

4th.—The plots of land will be sold revenue-free to the highest bidders.

5th.—The purchasers shall be put in possession on receipt by the Collector of the orders of the Board confirming the sales.

Consecutive lot number.	Name of district.	Mauza.	Number of mile on which land is situate.	Situated on which side of the Railway.	APPROXIMATE AREA OF LOT IN KANIS AND ACRES.		LAND EXCLUDED FROM SALE FROM EACH PLOT.		Commencement and termination of lot.	Boundary of lot.
					Maghi kani.	Acre.	Reasons for exclusion.	A. R. P.		
1	2	3	4	5	6		7		8	9
					Kani.	A. R. P.				
1	Chittagong ...	Bhatiary	8th mile	East side	43·83	17 2 5	Nil	Nil	Nil	Nil.
2	Ditto ...	Sonaicherry	14th do.	West side	28 57	11 1 27	,,	,,	,,	,,
3	Ditto ...	Banaberia	18th do.	Ditto	25·68	10 1 3	,,	,,	,,	,,
4	Ditto ...	Katxar	20th do.	East side	35·80	14 1 11	,,	,,	,,	,,
5	Ditto ...	Terial	27th do.	West side	29·37	11 2 38	,,	,,	,,	,,
6	Ditto ...	Wahedpur	32nd do.	Ditto	25·31	9 3 29	,,	,,	,,	,,
7	Ditto ,,	Gobania	36th do.	Ditto	23·30	9 1 11	,,	,,	,,	,,
8	Ditto ...	Asamnagar	45th do.	East side	21·10	8 1 30	,,	,,	,,	,,

Chittagong, the 26th July 1902. E. GEAKE, Collector.

SALE of patni rights of Biby Jorao Kumari Sahiba in Estate Mahomed Aminpur, tauzi No. 3989, which include the patni right in Baidyabti *hát* in village Sheoraphuli in thana Serampore, district Hooghly:—

No. of estate.	Name and residence of judgment-debtor.	Specification of judgment-debtor's interest to be sold.	Date fixed for sale.	Nature and amount of arrears.	REMARKS.
3989	S. M. Biby Jorao Kumari Sahiba, of 147 Harabazar, Cotton Street, Calcutta.	The entire patni right held under Zamindar Maharaja Sir Jotendro Mohon Tagore, K.C.S.I., to whom she pays Rs. 46,156-14-6 annually as her patni rent. This patni includes also the patni right in Baidyabati *hát* in village Seoraphuli in thana Serampore, district Hooghly.	25th September 1902, corresponding to B.S. 9th Aswin 1309.	Due on account of engagements Nos. 109, 110, 117, 162, 242, 243 and 311 in connection with the Howrah Drainage Scheme and engagement No. 1440 in connection with the Rajapore Drainage Scheme, Rs. 41,614-7-10	Howrah Drainage Certificate Cases Nos. 1125 of 1898-99, 186, 187, 273, 104 and 274 of 1901-1902 and 494 and 214 of 1900-1901.

MAHESH CH. SEN, Certificate Officer, Hooghly,

Hooghly Collectorate, Certificate Department, the 21st of July 1902.

Notification.

NOTICE is hereby given, under sections 6 and 13, Act XI of 1859, that the undermentioned estates and shares of estates in the district of Shahabad will be put up for sale at the office of the Collector of that district on Thursday, the 28th August 1902, at 12 noon, corresponding with 9th Bhado 1309 F., for arrears of revenue and other demands which by law are realizable as arrears of land revenue.

When in columns 5, 7 and 9 of the appended statement it is stated that only a share is to be sold, it is to be understood that a separate account is kept for that share and the other share or shares in the estate are excluded from sale.

Tauzi No.	Name of mahal and pargana.	Sadar jama of whole estate.	Whether the whole estate is to be sold.	If only a share is to be sold, specification of such share or shares.	Names of proprietors of property to be sold.	If only a share is to be sold, the sadar jama of such share.	If the whole estate is to be sold, the arrears due from it.	If only a share is to be sold, the arrears due from it.
1	2	3	4	5	6	7	8	9
						Rs. A. P.	Rs. A. P.	Rs. A. P.
434	Mahuli Khurd pargana Arrah.	550 0 0	Whole ..	.....	Rambaran Singh and others.	... ..	190 15 6	.....
703	Koilwar, pargana Barahgawan.	7,770 12 7	Do. ..	.. ...	Kazi Mohamad Wahid Asraf, Bishun Pershad, Seri Mahatani Beni Parshad Kuari, Babu Saligram Singh and others, proprietors of 16 annas.	.....	*L. R. 1,053 5 11 T. M. 4 8 0 Do. 2 4 0 1,060 1 11	.....
893 / Ijmal	Chancher, pargana Behia.	1,713 9 8	.....	Ijmali share to be sold is 5a. 4p. and other share is excluded from sale.	Dhankumar Chand, Basanta Kuar and others.	571 2 11	.....	74 3 2
1211 / Ijmal	Suhia, pargana Behia	4,253 13 10	.....	Ijmali share to be sold is in Suhia 2a. 8p. Bharauli 5a. 4p. Other shares are excluded from sale.	Nund Lal, Ram Narain Singh and others.	644 15 3	.....	97 10 11
1269	Baruha, pargana Bhojpur.	870 10 8	Whole ...	.....	Jadunundan Singh, Raghunundan Singh and others.	.....	3 8 5	.....
1798	Kusurpa, pargana Chausa.	839 11 6	Do. ...	... .	Bhugwat Sahai, Mussammat Dulahin, Rama Kuar, wife of Raja Ram, Rasbehari Lal and others proprietors of 16 annas.	.....	†L. R. 145 14 4 T. M. 6 0 0 151 14 4	.....
2153	Barahuli, pargana Chainpur.	511 9 2	Do.	.....	Ram Saroop Singh, Chandan Singh and others.	.....	92 1 2	.....
2198	Bairi Raghunathpur, pargana Chainpur.	589 4 0	Do. ...	.....	Sooraj Narain Singh, self and guardian of Aditi Prashad Singh.	.....	184 6 10	.....
2908 / Ijmal	Umanpore, pargana Chainpur.	5,912 6 4	... ..	Ijmali share to be sold is in village— As. P. Patilahang ... ... 13 9 Umanpore ... ... 1 3 Sahijna ... ... 4 3 Chandrauli ... ... 16 0 Sarlaon .. .. 8 6 Sotwahisopoor... ... 12 0 Semeria ... ... 8 0 Choukhanda ... ... 16 0 Chak Bhugwat ... 8 0 Harkutya ... ... 8 0 Ahidoura ... ... 16 0 Kutumanpore ... ... 16 0 Dhora Patisarwa ... 8 0 Sarla Balbhadarpore 4 3 Kasthar ... ... 16 0 Kishunpura ... . 11 0 Other shares are excluded from sale.	Ramdani Rai, Dudh Nath Rai and others.	2,111 12 1	.....	319 1 10
3000 / 3 and 7	Ruppur, pargana Chainpur.	14,486 15 9	.	The share of separate account to be sold is khata 3 in village Oru 8a. and khata 7, 8a. in village Oru.	Jageshar Singh and others	254 13 10	.....	109 3 4
				Other shares are excluded from sale with the exception of khata 1 which will also be sold.	Adhat Singh	255 0 0	.....	.....
3074 / Ijmal	Sondhi, pargana Chainpur.	1,636 4 8		Ijmali share to be sold is in village— As. Majhgaon ... ... 16 Baruna ... ... 8 Jignazamin ... ... 8 Madanpura ... ... 8 Sondhi Reste Khandha 8 Mirga Rampur ... ... 8 Kharigawan ... ... 8 Rajabandh ... ... 8 Share in mahula ... . 8 Other shares are excluded from sale.	Kishunanund Sham Behari Lal *alias* Gogalal and others.	527 15 7	.....	265 5 5
6095	Pandeypatti, pargana Bhojpur.	620 8 0	Whole ..	.....	Sital Pershad, Kamlapat and others.	.....	166 5 9	.....

* These are the arrears due from khata 1 at March kist, and the sale is held under section XIV, Act XI of 1859.
† These are the arrears due from ijmali share for March kist, and the sale is held under section XIV, Act XI of 1859.

Arrah, the 24th July 1902.

H. COUPLAND, Collector.

Advertisement of Sale.

NOTICE is hereby given that the undermentioned plots of land, no longer required by Government, situated along the Assam-Bengal Railway, in the district of Noakhali, will be put up to sale at 12 o'clock on Monday, the 29th September 1902, corresponding with the 13th Ashwin 1309 B. S., in the office of the Collector of Noakhali—

Consecutive lot number.	Name of district.	Pargana and mauza.	Number of mile on which land is situate.	Situated on which side of the Railway.	Approximate area of lot in bighas and in acres. B. K. C.	Approximate area of lot in bighas and in acres. A. R. P.	Land excluded from sale from each lot. Reasons for exclusion.	Land excluded from sale from each lot. A. R. P.	Commencement and termination of lot.	Boundary of lot.
1	2	3	4	5	6		7		8	9
					Case No. 1.					
1	Noakhali	Pargana Bedrabad, mauza Sahadebpur.	56	South-west	1 8 12	0 1 36·80	.....	.....	.....	*North*—Village road. *South*—, *East*—, *West*— } Khal.
2	Ditto ...	Pargana Bedrabad, mauza Borahipur.	56	North-east	4 8 13	1 1 39·40	.....	.....	.....	*North*—Road to Railway station. *South*—Feni school compound. *East*—Ditch. *West*—Cart stand.
3	Ditto	Ditto ..	56	Ditto ..	5 0 7	1 2 25·60	.....	.....	..	*North*—Cultivated land. *South*—Village road. *East*—Cultivated land. *West*—Tank.
					Case No. 2.					
4	Ditto .	Pargana Alahabad, mauza Fatehpur.	58	South-west	0 11 9	0 0 30·00	.....	.....	.....	*North*—Railway land. *South*—, *East*—, *West*— } Cultivated land.
5	Ditto ..	Pargana Bedrabad, mauza Matharia.	58	North ...	0 8 9	0 0 22·52	.....	.....	.....	*North*—Cultivated land. *South*—Railway land. *East*—, *West*— } Cultivated land.
6	Ditto ..	Ditto ..	58	North-east	0 5 0	0 13·04	.....	.....	....	*North*—Cultivated land. *South*—Railway land. *East*—, *West*— } Cultivated land.
7	Ditto	Pargana Amirabad, mauza Fazilpur.	60	Ditto ...	0 13 14	0 0 36·72	.....	.....	.....	*North*—Cultivated land. *South*—Railway land. *East*—, *West*— } Cultivated land.
					Case No. 3.					
8	Ditto ...	Pargana Begamganj, mauza Rajnagar.	49	North ...	14 15 3	4 3 20·80	.....	.....	.....	*North*—Homestead land. *South*—Railway land. *East*—Muhuri river. *West*—Railway.

Noakhali, the 31st July 1902.

R. C. DAS, *for* Collector.

Notification A.

NOTICE is hereby given under sections 6 and 13, Act XI of 1859, that the undermentioned estates and shares of estates in the district of Backergunge will be put up for sale at the office of the Collector of that district on the 26th September 1902 at 12 o'clock for arrears of revenue and other demands which by law are realisable as arrears of land revenue.

When in columns 5, 7 and 9 of the appended statement it is stated that only a share is to be sold, it is to be understood that a separate account is kept for that share.

Tauzi No.	Name of mahal and pargana.	Sadar jama of the whole estate.	Whether the whole estate is to be sold.	If only a share is to be sold, specification of such share or shares.	Names of proprietors of property to be sold.	If only a share is to be sold, the sadar jama of such share.	If the whole estate is to be sold, the arrears due from it.	If only a share is to be sold, the arrears due from it.
1	2	3	4	5	6	7	8	9
		Rs. A. P.				Rs. A. P.	Rs. A. P.	Rs. A. P.
1994	Taluq Biswa Nath Sen, of pargana Khanya Bahadurnager.	570 0 11½	Whole estate.	.....	Ram Narain Sen and others.	.....	142 6 9	.....
2749	Taluq Durga Gangeswar of pargana Uttar Sahabazpur.	1,037 11 2½	.....	Separate account No. 1 for 8 annas' share.	Guru Prosanna Roy and others.	518 13 8	.....	54 6 5
4634	Char Sarikol of pargana Jaxira.	3,441 11 3	Whole estate.	.....	Mr. G. L. Garth and Mr. H. L. Weatheral, trustees to the estate of Tojambal Ali Choudhury and others.	.....	2,341 11 3	.....
4688	Char Jahapur of pargana Jaxira.	5,000 0 0	Ditto ...	.....	Ditto ...	.....	300 0 0	.....
5235	Char Makarari, howla No. 1, of Char Tabgi of pargana Dakshin Sahabazpur.	3,077 0 0	Whole howla.	.....	Basanta Kumar Guha ..	.....	460 0 0	.....

Backergunge Collectorate, the 31st July 1902.

D. WESTON, *Collector.*

Notification A.

NOTICE is hereby given, under sections 6 and 13, Act XI of 1859, that the undermentioned estates and shares of estates in the district of Bogra will be put up for sale at the office of the Collector of that district on the 22nd September 1902 at noon for arrears of revenue and other demands which by law are realisable as arrears of land revenue.

When in columns 5, 7 and 9 of the appended statement it is stated that only a share is to be sold, it is to be understood that a separate account is kept for that share.

Tauzi No.	Name of mahal and pargana.	Sadar jama of the whole estate.	Whether the whole estate is to be sold.	If only a share is to be sold, specification of such share or shares.	Names of proprietors of property to be sold.	If only a share is to be sold, the sadar jama of such share.	If the whole estate is to be sold, the arrears due from it.	If only a share is to be sold, the arrears due from it.
1	2	3	4	5	6	7	8	9
12	Taraf Bihar, pargana Selbarsa.	Rs. A. P. 4,773 9 8½	.	The ijmali or residue share, excluding the shares for which separate accounts have been opened, will be sold.	Mahamad Elahadad Khanmani and others.	Rs. A P. 3,303 5 1½	Rs A. P.	Rs A. P. 97 6 5½

Bogra Collectorate, the 28th July 1902.

R. KRISHNA, Collector.

Notification A.

NOTICE is hereby given, under sections 6 and 13, Act XI of 1859, that the undermentioned estates and shares of estates in the district of Chittagong will be put up for sale at the office of the Collector of that district on the 8th September 1902 at 12 A.M. for arrears of revenue and other demands which by law are realizable as arrears of land revenue.

When in columns 5, 7 and 9 of the appended statement it is stated that only a share is to be sold, it is to be understood that a separate account is kept for that share.

Tauzi No.	Name of mahal and pargana.	Sadar jama of whole estate.	Whether the whole estate is to be sold.	If only a share is to be sold, specification of such share or shares.	Names of proprietors of property to be sold.	If only a share is to be sold, the sadar jama of such share.	If the whole estate is to be sold, the arrears due from it.	If only a share is to be sold, the arrears due from it.
1	2	3	4	5	6	7	8	9
4098 / 4119 / 3118	Thana Chakaria, taraf Sheikh Masta Khan Chowdhury.	Rs. A. P 527 6 6	The whole estate will be sold.		Badiajjama, Abdul Majid and others.	Rs. A. P.	Rs. A. P. 60 4 5	Rs. A. P. ...

The amount shown in column 8 represents the arrears due for kist ending 25th February 1902.

Chittagong Collectorate, the 28th July 1902.

E. GRAKE, Collector.

Notice of Sale for Arrears of Revenue.

NOTICE is hereby given, under section 6, Act XI of 1859, read with Act VIII (B.C.) of 1868 and Act II (B.C.) of 1871, that the undermentioned Noabad taluk in the district of Chittagong will be put up to public and unreserved sale at the Collector's office of that district on 2nd September 1902 at 12 noon for arrears of rents and cesses remaining unpaid on the 25th May 1902:—

No. of tenure.	Name of mauza, thana and mahal.	Name of proprietor.	SADAR JAMA.		AMOUNT OF ARREARS FOR WHICH THE TENURE IS TO BE SOLD.		
			Rent.	Cess.	Rent.	Cess.	Total.
1	2	3	4	5	6	7	8
30 / 122	Mahal Noabad, mauza Khurulia, thana Ramu, taluk Baksha Ali.	General Manager, Court of Wards, on behalf of the estate of Mahabat Ali Chowdhury.	Rs. A. 688 9	Rs. A P. 92 8 6	Rs. A. 2,554 4	Rs. A. 370 2	Rs. A. 2,924 6

Chittagong, the 2nd August 1902.

A. H VERNEDE, *for* Collector.

Notification B.

NOTICE is hereby given, under sections 5 and 13, Act XI of 1859, that unless the arrears mentioned below are paid on or before the next latest date of payment, viz., the 28th June 1902, the undermentioned estates or shares of estates in the district of Tippera will be put up for sale at the office of the Collector of that district on the 26th September 1902 at 12 o'clock for the said arrears.

When in columns 5, 7 and 9 of the appended statement it is stated that only a share is to be sold, it is to be understood that a separate account is kept for that share.

Tauzi No.	Name of mahal and pargana.	Sadar jama of whole estate.	Whether the whole estate is to be sold.	If only a share is to be sold, specification of such share or shares.	Names of proprietors of property to be sold.	If only a share is to be sold, the sadar jama of such share.	If the whole estate is to be sold, the arrears due from it.	If only a share is to be sold, the arrears due from it.	Nature and amount of demand for which to be sold.
1	2	3	4	5	6	7	8	9	10
		Rs. A. P.				Rs. A. P.	Rs. A. P.	Rs. A. P.	Rs. A. P.
1925	Pargana Uttar Sahapur char near Nagarer Kandi, No. 211.	1,296 10 0	Whole ...	.....	Ishan Chandra Datta and others.	.....	202 9 4	... ..	202 9 4

Tippera Collectorate the 29th May 1902.

H. W. SCROOPE, Offg. Collector.

Notification A.

NOTICE is hereby given, under sections 6 and 13, Act XI of 1859, that the undermentioned estates and shares of estates in the district of Muzaffarpur will be put up for sale at the office of the Collector of that district on the 8th September 1902, corresponding with 20th Bhado 1309 F.S., for arrears of revenue and other demands which by law are realisable as arrears of land revenue.

When in columns 5, 7 and 9 of the appended statement it is stated that only a share is to be sold, it is to be understood that a separate account is kept for that share.

Tauzi No.	Name of mahal and pargana.	Sadar jama of whole estate.	Whether the whole estate is to be sold.	If only a share is to be sold, specification of such share or shares.	Names of proprietors of property to be sold.	If only a share is to be sold, the sadar jama of such share.	If the whole estate is to be sold, the arrears due from it.	If only a share is to be sold, the arrears due from it.
1	2	3	4	5	6	7	8	9.
		Rs. A. P				Rs. A. P.	Rs. A. P.	Rs. A. P.
908/Rs.	Amwa Kalan Nowazun, pargana Babra Champaran.	2,000 12 9	...	Residuary share, 5a. 7p. ... . All other shares besides that specified will be excluded from sale.	Babu Isre Prosad and others.	698 9	.....	17 9 7
1680	Baijnathpur Krishn Coomar, pargana Gadulsund.	671 8 1	The whole		Babu Durga Coomar Upadaea and others.	.....	1[illegible]1 3 0	.....
2485/Rs.	Pojhia-Basunt, Chukla Gurjaul, pargana Bisara.	1,693 10 7	.....	A. G. C. KT. Residuary share— Pojhia-Basunt .. ... 5 1 2 2 Barehia and Pojhia Zamin . ... 5 1 2 2 Jahanabad ... ... 5 1 2 2 Ghataro-khas-zamin ... 5 1 2 2 Chuk Rahmat ... ... 5 1 2 2 Hansi Gnaram ... ... 5 1 2 2 Ghataro doolum ... ... 3 16 2 1 Raghoonathpur .. . 3 16 0 0 All other shares besides that specified will be excluded from sale.	Babu Zoolumdhari Prosad Singh and others.	537 3 8	.....	106 3 5
5150	Poorab Chhupra Vishwnath Singh, pargana Nanpur.	642 8 7	The whole	....	Babu Dabi Prosad Singh and others.	.. ...	13 10 9	.....
11277	Chatarbhoojpur Bhairo Missar, pargana Rutti	648 2 2	Ditto ...	....	Rai Manindra Bahadur, minor under the guardianship of Musamat Goolab Kuner, mother, and Babu Moti Chand and others.	.....	849 3 2	.....
11714	Kamaldah, pargana Iraath.	855 13 4	Ditto .	.....	Mirza Nazir Hossen and others.	.....	207 2 10	.....

Muzaffarpur Collectorate, the 25th July 1902.

E. V. LEVINGE, Collector.

Advertisement of Sale.

NOTICE is hereby given that the undermentioned plots of land, no longer required by Government, situated along the Assam-Bengal Railway, in the district of Tippera, will be put up to sale at 12 o'clock on the 26th day of September 1902, corresponding with the 10th Asvin 1309 Fasli, at the office of the Collector of Tippera.

The purchasers of the several plots of land will be subject to the following conditions:—

1st.—The purchasers will have no power to make any excavations on the land nearer than 15 feet from the railway fencing, or plough the lands closer than 3 feet from its foundation.

2nd.—If the amount of purchase-money does not exceed Rs. 100, the whole amount must be paid down at once.

3rd.—If the amount of purchase-money exceed Rs. 100, one-fourth of the amount must be immediately deposited. If the balance be not paid by noon of the fifteenth day after the sale, reckoning the day of sale as one, or if that day be a close holiday, then by noon of the first succeeding office day, the sale shall be cancelled, the sum deposited being forfeited to Government, and the lot again put up for sale at the risk of the defaulting purchaser, after issue of advertisement, as in the case of original sale.

4th.—The plots of land will be sold revenue-free to the highest bidders.

5th.—The purchasers shall be put in possession on receipt by the District Collector of the orders of the Board confirming the sale.

Consecutive lot No.	Name of district.	Pargana and mauza.	Number of mile on which land is situate.	Situated on which side of the railway.	Approximate area of lot in bighas and in acres.		Land excluded from sale from each lot.		Commencement and termination of lot.	Boundary of lot.
					B. K. C.	A. R. P.	Reasons for exclusion.	A. R. P.		
1	2	3	4	5	6		7		8	9
1	Tippera	Pargana Homnabad, mauza Uttarkul.	At mile No. 78.	South-west of Railway line.	3 6 2	1 0 14·9	...	...	Lots Nos. 1 to 18	*North*—Mauza Uttarkul. *South*—Mauza Uttarkul and Railway line. *East*—Mauza Uttarkul. *West*—Railway line.
2	Ditto	Pargana ditto, mauza Noagaon.	Ditto	Ditto	0 15 5	0 1 ·4	...	.....	Ditto	*North*—Mauza Uttarkul and Railway line. *South*—Mauza Noagaon. *East*—Railway line and mauza Noagaon. *West*—Mauza Noagaon.
3	Ditto	Pargana ditto, mauza Ashkanta.	At mile No. 75.	East of Railway line.	1 17 10	0 2 19·5	...	...	Ditto	*North*—Railway line. *South*—Mauza Ashkanta. *East*—Railway line. *West*—Mauza Ashkanta.
4	Ditto	Pargana Homnabad, mauza Lakshanu.	At mile No. 0.	Within ½ mile of the Railway station.	1 8 11	0 1 35·5	...	.....	Ditto	*North*— *South*— } Mauza Lakshanu. *East*— *West*—District Board road.
5	Ditto	Pargana Mehar, mauza Upalata.	At mile No. 11.	East of Railway line.	0 17 15	0 1 7·4	...	...	Ditto	*North*—Mauza Upalata. *South*—Railway line. *East*— *West*— } Mauza Upalata
6	Ditto	Pargan Meharkul mauza Bejoypur.	At mile No. 10.	North of Railway line.	2 16 4	0 3 28·7	.....	...	Ditto	*North*—Mauza Bejoypur. *South*—Bikrampur land attached to the Railway fencing. *East*—Bejoypur mauza. *West*—Railway line.
7	Ditto	Pargana Mehar, mauza Naora.	At mile No. 9½.	East of Railway line.	5 0 8	1 2 25·7	...	...	Ditto	*North*—Railway line. *South*—Southern bank of Dighi. *East*—Khal or boundary of mauza Borulia. *West*—Dighi water.
8	Ditto	Ditto ...	Ditto	Ditto	8 7 8	2 3 2·9	.....	...	Ditto	*North*—Railway line. *South*—Southern bank of Naora Dighi. *East*—Naora Dighi. *West*—Chandra Kumar Chakerbutty, Jahuraddi Patwari and Moniram Dhupi.
9	Ditto	Pargana Meharkul mauza Saidpur.	At mile No. 7.	South of Railway line.	47 5 14	15 2 21·4	..	..	...	*North*— *South*— } Gangjuri khal. *East*—Distr ct Board road. *West*—Gangjuri khal
10	Ditto	Ditto ...	Ditto	Ditto	32 12 8	10 3 5·6	...	.....	.....	*North*—Gangjuri khal. *South*—Saidpur. *East*—Railway line. *West*—District Board road.
11	Ditto	Ditto ...	Ditto	Ditto	10 14 4	3 2 6·6	.....	.....	.....	*North*—Gangjuri khal. *South*—Jirat Gasi and khash patit. *East*—District Board road. *West*—Gangjuri khal.
12	Ditto	Ditto ...	Ditto	Ditto	14 12 12	4 3 14·2	.....	.....	.....	*North*—Rajjabali. *South*—Dakatia river. *East*—District Board road. *West*—Gangjuri khal.
13	Ditto	Pargana ditto, mauza Barapara.	At mile No. 10.	North of Railway line.	10 12 13	3 2 2·2	.....	.....	.....	*North*—Gangjuri khal. *South*—Khal or Cherpara mauza. *East*—Khal, khal side and District Board road. *West*—Dakshin Bejoypur.
14	Ditto	Pargana Tora, Tapa Ibrahimpur.	At mile No. 17.	East of Railway line.	120 13 14	30 3 23·8	.....	.....	.....	*North*—Mauza Toragor. *South*—Railway line. *East*—Mauza Toragor. *West*—Hajigunge khal.
15	Ditto	Pargana ditto, mauza Kangnish Hatila.	At mile No. 15.	Ditto	98 9 4	32 2 6·9	.....	.....	Lots Nos. 1 to 18...	*North*—Railway line. *South*—Kangnish mauza. *East*—Khal of Sholkhali. *West*—Kangnish.
16	Ditto	Pargana ditto, mauza Panchbaria.	At mile No. 23.	Ditto	31 14 12	10 1 38·6	.....	.....	.....	*North*—Debpur brickfield. *South*— *East*— *West*— } Mauza Panchbaria.
17	Ditto	Pargana ditto, mauza Debpur.	Ditto	Ditto	43 7 14	14 1 10·9	.....	.....	.....	*North*—Railway line. *South*—Debpur brickfield. *East*— *West*— } Debpur mauza.
18	Ditto	Pargana ditto, mauza Panchbaria Sota Sundar.	Ditto	Ditto	2 13 8	0 3 21·4	.....	.....	.....	*North*—Panchbaria brickfield. *South*—Dakatia river. *East*—Mauza Panchbaria Sota Sundar. *West*—Mauza Punchbaria Sota Sundar.

Tippera Collectorate, the 2nd August 1902.

H. W. P. SCROOPE, Collector.

Notification.

NOTICE is hereby given, under sections 6 and 13, Act XI of 1859, that the undermentioned estates or shares of estates in the district of Jessore will be put up for sale at the Collector's office of that district on 15th September 1902 for arrears of revenue and other demands which by the Regulations and Acts in force are directed to be realised in the same manner as arrears of revenue.

When in columns 5, 7 and 9 of the appended statement it is stated that only a share is to be sold, a separate account is kept for such share and the other share or shares in the estate are excluded from the sale

Tauzi No.	Name of mahal and pargana.	Sadar jama of whole estate.	Whether the whole estate is to be sold.	If only a share is to be sold, specification of such share or shares	Names of proprietors of property to be sold.	If only a share is to be sold, the sadar jama of such share.	If the whole estate is to be sold, the arrears due from it.	If only a share is to be sold, the arrears due rom it.
1	2	3	4	5	6	7	8	9
5045	Dihi Chapra, pargana Mahamudshahi.	Rs. A. P. 655 10 10	Yes ...	... ...	Devnath Ghosh, Radha Charan Ghosh.	Rs. A. P.	Rs. A. P. 9 1 7	Rs. A. P. .....

Jessore Collectorate, the 6th August 1902. W. N. DELEVINGNE, Collector.

Notification A.

NOTICE is hereby given, under sections 6 and 13, Act XI of 1859, that the undermentioned estates and shares of estates in the district of Chittagong will be put up for sale at the office of the Collector of that district on the 26th September 1902 at 12 A.M. for arrears of revenue and other demands which by law are realisable as arrears of land revenue.

When in columns 5, 7 and 9 of the appended statement it is stated that only a share is to be sold, it is to be understood that a separate account is kept for that share.

Tauzi No.	Name of mahal and pargana.	Sadar jama of whole estate.	Whether the whole estate is to be sold.	If only a share is to be sold, specification of such share or shares.	Names of proprietors of property to be sold.	If only a share is to be sold, the sadar jama of such share.	If the whole estate is to be sold, the arrears due from it.	If only a share is to be sold, the arrears due from it.
1	2	3	4	5	6	7	8	9
2093 2100 1512	Thana Hathazari, Taraf Krishna Kishore Kanungoe.	Rs. A. P. 645 6 7	Only a share will be sold.	Only share No. 1 and no other share will be sold.	Fazal Ahmed, Bazal Samad and others.	Rs. A. P. 524 13 6	Rs. A. P.	Rs. A. P. 131 3 4

N.B.—The amount shown in column 9 represents the arrear due for kist ending 25th May 1903.

Chittagong, the 16th August 1902. P. E. CAMMIADE, Offg Collector.

Notification A.

NOTICE is hereby given, under sections 6 and 13, Act XI of 1859, that the undermentioned estates and shares of estates in the district of Hooghly will be put up for sale at the office of the Collector of that district on the 25th September 1902 at 12 noon for arrears of revenue and other demands which by law are realisable as arrears of land revenue.

When in columns 5, 7 and 9 of the appended statement it is stated that only a share is to be sold, it is to be understood that a separate account is kept for that share.

Tauzi No.	Name of mahal and pargana.	Sadar jama of whole estate.	Whether the whole estate is to be sold.	If only a share is to be sold, specification of such share or shares.	Names of proprietors of property to be sold.	If only a share is to be sold, the sadar jama of such share.	If the whole estate is to be sold, the arrears due from it.	If only a share is to be sold, the arrears due from it.
1	2	3	4	5	6	7	8	9
35	Mandalghat, pargana Mandalghat.	Rs. A. P. 2,23,423 3 8	.....	Residuary share consisting of 3a. 13g. 3c. 3kng 5½til share of the estate.	Manic Lal Seal and others	Rs. A. P. 51,616 8 6	Rs. A. P.	Rs. A. P. 477 13 10
69	Ramjangal, pargana Mandalghat.	19,343 4 9	.....	Residuary share consisting of 7a. 5g. share of the estate.	Amrita Lal Seal and others.	8,760 9 8	.....	1,138 4 8

Hooghly Collectorate, the 16th August 1902. MAHESH CHANDRA SEN, Sale Deputy Collector.

Notification A.

NOTICE is hereby given, under sections 6 and 13, Act XI of 1859, that the undermentioned estates and shares of estates in the district of Midnapore will be put up for sale at the office of the Collector of that district on Friday, the 26th September 1902 for arrears of revenue and other demands which by law are realisable as arrears of land revenue.

When in columns 5, 7 and 9 of the appended statement it is stated that only a share is to be sold, it is to be understood that a separate account is kept for that share, and that the other share or shares in the estate are excluded from the sale

Tauzi No.	Name of mahal and pargana.	Sadar jama of whole estate.	Whether the whole estate is to be sold.	If only a share is to be sold, specification of such share or shares.	Names of proprietors of property to be sold.	If only a share is to be sold, the sadar jama of such share.	If the whole estate is to be sold, the arrears due from it.	If only a share is to be sold, the arrears due from it.
1	2	3	4	5	6	7	8	9
		Rs. A. P.				Rs. A. P.	Rs. A. P.	Rs. A. P.
184	Pargana Bajarpore, mahal Panchbajari.	650 10 8	Entire ..	.....	Sarat Chandra Jana and others.	.....	71 2 8	.....
276	Pargana Balisita, mahal Bhitarbinode	1,668 14 10	Do. ...	..	Maheswar Masanta and others.	.....	180 4 9	.....
374	Pargana Bhatgar Bahirimutha, mahal Bhugabanpore *alias* Bar Bhagabanpore	1,010 0 5	.....	S. A. I	Madhusudan Das	505 4 9	.....	37 12 0
558	Pargana Dakhinmal, mahal Haripore.	6,769 1 5	.	S. A. II	Haripriya Devi	3,384 5 9	.....	740 0 3
921	Pargana Kasijora, mahal Chakdaha *alias* Radhaballavpore.	2,185 8 0 with police.	.....	Residuary share excluding S. A. Nos. I, II, III, IV, V, VI.	Srimaty Niroda Moyi Dasi and others.	1,232 9 5	... ..	282 11 9
937	Pargana Kasijora, mahal Gar Purusothampore *alias* Chaitannapore.	738 10 5	..	Residuary share excluding S. A. Nos. I and II.	Ganga Narain Maity and others.	500 14 8	.....	36 7 3
939	Pargana Kasijora, mahal Gazas.	2,407 8 3	Entire ...	.....	Srinarain Pal	.....	270 0 0	.....
944	Pargana Kasijora, mahal Gumukpota.	3,185 0 0 with police.	.....	S. A. I	Mani Mohon Ray proprietor Jogendra Nath Pathak mortgagee.	1,592 8 0	.....	174 8 0
947	Pargana Kasijora, mahal Gogras Patna.	1,512 2 3 with police.	... .	Residuary share excluding S. A I.	Shaikh Sorfuddin and others	604 8 9	.....	55 3 6
948	Pargana Kasijora, mahal Gogras Keshabbar.	1,005 8 8	Entire ...	... .	Srimotya Niroda Moyi Dasi and others.	.....	110 0 0	.....
974	Pargana Kasijora, mahal Khandakhola.	936 11 2	Do. ..	.....	Srimotya Kailashi Dasi and others.	.....	102 8 0	.... .
978	Pargana Kasijora, mahal Manahorpur *alias* Prasad Chak.	1,625 15 6	Do. ...	... ..	Srimotya Niroda Moyi Dasi and others.	. ..	178 8 0	.....
1007	Pargana Kasijora, mahal Parba Itra.	43,145 8 3 with police.	.....	Residuary share excluding S. A. Nos. 1, 3, 4, 5, 6, 7, 8, and 9.	Manik Lal Seal	13,109 5 7	.....	75 7 4
1019	Pargana Kasijora, mahal Sadhuspota.	675 1 11	Entire ...	.....	Srimotya Tarangini Dassi .	... .	74 4 0	... .
1030	Pargana Kasijora, mahal Uther Usatpore.	3,473 9 7	..	S. A 8	Nimai Chand De and others	641 0 0	.....	7 0 0
1066	Pargana Kasijora, kismat mahal Palsa Uther.	2,039 1 2 with police.	...	Residuary share excluding S. A. 1, 2, 3, 4.	Amarnath Ghose and others	532 5 2	.....	59 1 4
1346	Pargana Khatnagor, mahal Dewli.	1,069 5 9	Entire .	..... .	Nimai Chand De	.....	117 14 3	.....
1467	Pargana Khander, mahal Bansgeria *alias* Sahorda.	2,008 8 6	.....	Residuary share excluding S. A. Nos. 4, 5, 6, 8, 9, 10, 11, 12, 13, 14, 15, 16.	Sibaprasad Bhakhat and others.	975 12 4	.....	24 4 1
1730	Pargana Moynachore, mahal Anandapore.	5,657 4 9	... .	S. A. 8	Sripati Charan De	1,795 3 8	.....	196 14 0
1731	Pargana Moynachore, mahal Ankhua Purba.	1,001 7 2	.....	Residuary share excluding S. A. I.	Ganganarain Maity	500 11 7	.....	53 4 6
1884	Pargana Majnamutha, mahal Nankar Bajapti.	2,130 9 0	... ..	Residuary share excluding S. A. Nos. 1, 2, 4, 5, 6, 7.	Purna Chandra Mitra and others.	746 13 2	.....	163 5 1
1884	Ditto ditto ...	2,130 9 0		S. A. I	Kritarthamoyi and others ...	703 12 5	... ..	154 0 0
2246	Pargana Sabang, mahal Mahar.	1,302 1 0	Entire ...	.....	Syed Matanath Ali and others	.....	33 8 0	... ..
2247	Ditto ditto ..	1,445 9 0	Do. ...	.....	Sarat Chandra Jana and others.	.....	156 9 0	.....
2437	Pargana Sahapur, mahal Hasimpore.	1,014 2 10 with police.	Do. ...	...	Girish Chandra Jana and others.	.. ...	110 12 6	.....
				Temporary-settled Estates, Part II.				
2384	Pargana Pataspore, mahal Mangolpore.	2,401 0 0		Residuary share excluding S. A. No. 2.	Upendra Nandan Das Mohapatra.	2,016 2 6	.....	14 8 0

Midnapore Collectorate, Arrear Collection Department, the 16th August 1902. H. LUSON, Collector of Midnapore.

Notification.

NOTICE is hereby given, under sections 6 and 13, Act XI of 1859, that the undermentioned estates or shares of estates in the district of Dacca will be put up for sale at the Collector's office of that district on the 23rd September 1902 for arrears of revenue and other demands which by the Regulations and Acts in force are directed to be realised in the same manner as arrears of revenue.

When in columns 5, 7, and 9 of the appended statement it is stated that only a share is to be sold, a separate account is kept for such share and the other share or shares in the estate are excluded from the sale :—

Tauzi No.	Name of mahal and pargana.	Sadar jama of whole estate.	Whether the whole estate is to be sold.	If only a share is to be sold, specification of such share or shares.	Names of proprietors of property to be sold.	If only a share is to be sold, the sadar jama of such share.	If the whole estate is to be sold, the arrears due from it.	If only a share is to be sold, the arrears due from it.
1	2	3	4	5	6	7	8	9
8433	Pargana Khijirpur Gogchar Krokhar within char Bhedar.	Rs. A. P. 558 0 0	16 annas ...	... .	Lalit Mohan Rai ..	Rs. A. P.	Rs. A. P 212 0 0	Rs A. P

Dacca Collectorate, the 18th August 1902. J. T. RANKIN, Collector of Dacca.

Advertisement of Sale.

NOTICE is hereby given that the proprietary right of Government, as specified in the conditions of sale below, to the undermentioned estate, situate in the district of Khulna, will be put up to sale at the Khulna Collectorate on the 29th September 1902, corresponding to 13th Aswin 1309 B.S.

The purchasers will be subject to the following conditions of sale:—

Conditions of Sale.

1st.—The estate to be sold to the highest bidder above the upset price, which will be fixed by the Collector at the time of sale. The purchaser of this estate will be considered as the proprietor of the estate, and the entire proprietary right of Government in such estate will be transferred to him subject to the revenue fixed in perpetuity.

2nd.—The sale to be subject to existing leases and to the rights conferred by the settlement proceedings and by the laws in force, and purchasers to be bound to respect the rights of resident cultivators who have signed the schedule of assessment prepared by the revenue authorities.

3rd.—If the amount of purchase-money do not exceed Rs. 100, the whole amount to be paid down at once.

4th.—If the amount of purchase-money exceed Rs. 100, one-fourth of the amount of bid to be immediately deposited. If the balance be not paid by noon of the fifteenth day after the sale, reckoning the day of sale as one, or if that day be a close holiday, then by noon of the first succeeding office day, the sale is to be cancelled (the sum deposited being forfeited to Government), and the estate to be again put up to sale at the risk of the defaulting purchaser, after issue of advertisement, as in the case of original sale—

Number on the district roll.	Name of estate and pargana.	Approximate area—		Government revenue assessed.	Remarks.
		In bighas.	In acres.		
1	2	3		4	5
		B. K. CH.	A. R. P.	Rs. A.	
944	Haridaskati, pargana Malui	1 13 0	0 2 13	1 2	

Collector's Office, Khulna, the 18th August 1902.

S. C. MUKERJEE, Collector.

Notification A.

NOTICE is hereby given, under sections 6 and 13, Act XI of 1859, that the undermentioned estates and shares of estates in the district of Hooghly will be put up for sale at the office of the Collector of that district on the 25th September 1902 at 12 noon for arrears of revenue and other demands which by law are realisable as arrears of land revenue.

When in columns 5, 7, and 9 of the appended statement it is stated that only a share is to be sold, it is to be understood that a separate account is kept for that share.

Tauzi No.	Name of mahal and pargana.	Sadar jama of whole estate.	Whether the whole estate is to be sold.	If only a share is to be sold, specification of such share or shares.	Names of proprietors of property to be sold.	If only a share is to be sold, the sadar jama of such share.	If the whole estate is to be sold, the arrears due from it.	If only a share is to be sold, the arrears due from it.
1	2	3	4	5	6	7	8	9
4082, resid-uary.	Kaluyukhuria, thana Pandua, pargana Arambagh.	Rs. A. P. 13,536 1 1	.. ..	Residuary, *i. e.*, 2 annas 13 gandas 1 cora 1 kranti share of the estate.	Prem Chand Roy, Bama Podo Roy, and others of Madhobpur, thana Arambagh.	Rs. A. P. 2,253 9 5	Rs. A. P.	Rs. A. P. 7,874 10 4

Hooghly Collectorate, Chinsura, the 30th July 1902.

R. C. HAMILTON, Collector.

Abstract Statement of the Uncovenanted Service Family Pension Fund for the quarter ending 31st October 1901, being the second quarter of the year 1901-1902, compared with the corresponding quarter of the year 1900-1901.

PARTICULARS.	For the quarter ending 31st October 1901.	For the quarter ending 31st October 1900.	Increase.	Decrease.
	Rs. A. P.	Rs. A. P.	Rs. A. P.	Rs. A. P.
Balance in favour of the Fund at the end of the previous quarter	1,46,37,293 7 8	1,44,17,450 10 5	2,19,842 13 3	.....
ADD RECEIPTS—				
Subscriptions from 1st August to 31st October 1901 in the Widows' Fund	1,30,781 10 6	1,34,591 0 6	.....	3,809 6 0
Subscriptions from 1st August to 31st October 1901 in the Children's Fund	71,351 14 0	74,198 2 0	.....	2,846 4 0
Fees and stamps	13 0 0	10 0 0	3 0 0	.....
Amount at credit of subscribers under Rule 55 transferred to divisible surplus	61 14 0	535 13 0	.....	473 15 0
Amount of interest charged on subscriptions in arrear ...	4 1 6	6 10 0	.....	2 8 6
Income and outlay on office buildings and grounds	1,813 15 0	.....	1,813 15 0	.....
Total Receipts ...	2,04,026 7 0	2,00,341 9 6	1,816 15 0	7,132 1 6
GRAND TOTAL ...	1,48,41,319 14 8	1,46,26,792 3 11	A 2,21,659 12 8	7,132 1 6
DEDUCT DISBURSEMENTS—				
Pensions payable to incumbents in the Widows' Fund ..	1,47,234 6 3	1,42,863 7 0	4,370 15 3	.....
Ditto ditto in the Children's Fund ...	86,436 7 8	84,407 5 8	2,029 2 0	.....
Establishment, including contingencies	10,408 11 2	16,155 0 6	.....	5,746 5 4
Loss by exchange on remittances out of India	9,244 3 9	14,695 2 3	.....	5,450 14 6
Commission paid for money-orders	810 6 0	815 15 0	.....	5 9 0
Total Disbursements ...	2,54,134 2 10	2,58,936 14 5	B 6,400 1 3	11,202 12 10
Balance in favour of the Fund ...	1,45,87,185 11 10	1,43,67,855 5 6	C 2,15,259 11 0	4,070 11 4
GRAND TOTAL ...	1,48,41,319 14 8	1,46,26,792 3 11	2,21,659 12 3	7,132 1 6
Proportion of divisible surplus payable to qualified members of more than five years' standing	1,29,694 2 0	1,29,915 9 0	.....	221 7 0

	Widows' Fund.	Children's Fund.	Widows' Fund.	Children's Fund.	Widows' Fund.	Children's Fund.	Widows' Fund.	Children's Fund.
Number of subscribers	1,374	863	1,435	900	...	...	61	37
Ditto of incumbents	643	846	627	832	16	14	...	...
Ditto of subscribers sharing abatement	1,232	775	1,242	756	...	19	10	...

	Rs. A. P.
A.—Net increase in grand total of receipts ...	2,14,527 10 9
B.—Net decrease in total disbursements ...	4,802 11 7
C.—Net increase in balance ...	2,19,330 6 4

LOVELOCK AND LEWES, *Chartered Accountants,*
J. C. C. GRAY, *Accountant,* } *Auditors.*

Published by order of the Directors,

K. C. DAS,
Offg. Accountant.

G. K. WARDE,
Secretary, U. S. F. P. Fund.

Calcutta, the 16th July 1902.

(639—1

The Commissioners for the Port of Calcutta.

NOTICE is hereby given that the undermentioned packages, lying unclaimed in the Commissioners' Import Warehouse, will be sold by public auction on or after the 1st September 1902 under section 118 of Act III of 1898 :—

Date of removal.	Marks.	No.	Quantity.	Description.	Vessel's name.	Remarks.
1902.	SHED No. 1.					
February 8	Md. Enamullah, Md. Reazuddin or nil	...	1	Keg phenyle (half empty).	S.S. "Santhia." ...	H. G.
„ 8	M & Co in a diamond or M & Co	...	3	Casks cement ...	Ditto.	
„ 8	No mark	...	2	Tins biscuits ...	Ditto.	
„ 8	Ditto	...	1	Bottle oilman's store or pepper.	Ditto.	
„ 8	No mark or M & Co ...	...	1	Cask cement (broken).	Ditto.	
„ 19	P W or P P Works ...	...	1	Bed plate ...	S.S. "Mombassa."	
March 7	A C or Nil	...	1	Keg paint ...	Ditto.	
„ 4	Messrs. Kristo Dass Roy & Bros. or K. D. Roy & Co	...	1	Parcel	S.S. "Sunda."	
„ 4	Mrs. L. De Niceville F E S ...	...	1	Do.	Ditto.	
„ 4	N C C & Co in a triangle (diamond on top), C & B below or N C C & Co in a triangle (diamond on top).	99	1	Case	Ditto.	
„ 15	No mark	...	2	Bags fire-clay ...	S.S. "Dalmatia."	
April 7	No mark or C M C ...	...	1	Cask (broken and empty).	S.S. "Bavaria."	
„ 7	No mark	...	1	Bag cement or fire-clay	Ditto.	
„ 7	Ditto	...	1	Cask oil (empty) ...	Ditto ...	H. G.
„ 21	Ditto	...	...	A quantity of coriander seed.	S.S. "Clan Forbes."	
„ 21	B I S N Co J D H in a diamond ...	...	1	Drum (empty) ...	Ditto ...	H. G.
1900.	*Withdrawn from last sale.*					
March 5	A in a diamond, M M on top, Penang below (right side)	...	1	Cask sulphur ...	S.S. "Fallodon Hall."	H. G.
1901.						
November 18	M S P or nil	...	5	Joists ...	S.S "Weissenfels."	
„ 27	F & S Fac or nil	...	4	Plates ...	S.S. "Algeria."	
1902.	SHEDS Nos. 2-3.					
February 6	No mark	...	...	A quantity of loose capsules.	S.S. "Palawan."	
„ 6	Ditto	...	1	Tin barley ...	Ditto.	
„ 6	Ditto	...	2	Tins oilman's stores	Ditto.	
„ 6	S in a diamond, W H on top & Co below.	...	1	Truss sample ...	Ditto.	
„ 6	No mark or Wy brand ...	...	3	Bars flat iron ...	Ditto.	
„ 28	No mark	...	1	Illustrated catalogue	S.S. "Ormidale."	
April 1	J P S & S or F P S S ...	9393	1	Case	S.S. "Steinberger."	H. G.
„ 1	564 in a heart	...	1	Do.	Ditto ...	H. G.
„ 1	C 0244 in a diamond, M L on top and C O below.	...	1	Do.	Ditto ...	H. G.
March 24	J W	45	1	Do.	S.S. "Clan Mackenzie."	
„ 24	J W	3-5	3	Cases	Ditto.	
„ 24	J Whitby	46-8	3	Do.	Ditto.	
„ 24	J W	...	41	Cases wine ...	Ditto.	
„ 29	No mark	...	1	Bag sugar ...	S.S. "Marquis Bacquehem."	
April 9	J W	805	1	Case	S.S. "E. F. Ferdinand."	
„ 19	S in a double triangle, J C on top and M below (right side) or nil.	...	1	Part of a cask of asphalte.	S.S. "Matiana" ...	H. G.

Date of removal.	Marks.	No.	Quantity.	Description.	Vessel's name.	Remarks.
1902.	SHEDS Nos. 2-3—*concld.*					
April 19	I R O in a diamond, H & Co below or nil.	...	1	Cask (broken and empty).	S.S. "Matiana" ...	H. G.
„ 19	Kodia or Kadala, Chittagong ..	36	1	Case	Ditto.	
„ 19	W in a diamond or nil ...	...	1	Cask (broken and empty).	Ditto.	
„ 29	$\frac{355}{1962}$ in a diamond, G A on top & Co below.	61-62	2	Cases	S.S. "Statesman"	
1901.	*Withdrawn from last sale.*					
November 2	Captain Edgell, Jubbalpore ...	...	1	Truss spikes ...	S.S. "Sangola."	
„ 2	↑ or W ↑ D	...	1	Crowbar ...	Ditto.	
1902.	SHED No. 4.					
February 11	V C	9158	1	Case	S S. "Terisa."	
„ 11	No mark	...	7	Bags sugar ...	Ditto.	
„ 7	Ends red or white or no mark ...	...	10	Bundles round iron	S.S. "Ockenfels."	
„ 7	Ditto or end white ...	...	1	Bundle flat iron (loose).	Ditto.	
„ 7	111 yellow or nil	...	12	Bars tee iron ...	Ditto.	
„ 24	No mark	...		A quantity of loose turmeric.	S S. "Clan Campbell."	
„ 24	C C C in a block, M C on top or no mark.	...	1	Cask tar (empty) ...	Ditto ...	H. G.
„ 24	No mark	...	1	Cask pitch (leaky) ...	Ditto ...	H. G.
„ 24	↑ Provl. P W or no mark or end white.	...	1	Bar tee iron ...	Ditto	
„ 24	↑ Ends blue or nil or end white ...	...	2	Bars tee iron ...	Ditto.	
„ 24	No mark	...	20	Bars round iron equal to 3 bundles	Di to.	
„ 24	Ditto	...	3	Bundles round iron	Ditto.	
„ 24	Ditto	...	3	Bars anglo iron ...	Ditto.	
„ 24	Ditto	...	1	Bar tee iron ...	Ditto.	
„ 21	Y in a diamond, N M on top & S below or I in a diamond, N M on top & S below.	...	1	Case	S.S. "Beira."	
„ 21	No mark	...	1	Cask, empty ...	Ditto ...	H. G.
March 6	A M & Co or no mark ...	...	1	Cask tar (broken and empty).	S.S. "Clan MacArthur."	H. G.
„ 6	Messrs. Nilcomal Mittra and Sons	...	1	Case	Ditto.	
„ 10	M or nil	...	2	Kegs white paint ...	S.S. "Goorkha"	
„ 10	No mark or Danish ..	...	1	Case wine (empty) ...	Ditto.	
„ 24	B T in a diamond ...	7	1	Cask or keg paint ...	S S. "Schwarzenfels."	
„ 24	Taraguli or Tarruck or nil ...	262 or X	1	Keg nails ...	Ditto.	
„ 24	W H & Co	1178-79	2	Cases ...	Ditto.	
April 9	No mark	...	3	Pieces ridgings ...	S.S. City of "Khios."	
„ 9	$\frac{31}{1}$ in a diamond, M L on top, C O below.	X or 9930	1	Case ...	Ditto.	
„ 14	No mark or ↑	...	2	Jars ..	S S "Rewa" ...	H. G.
„ 14	Ditto	...	1	Cask cement ...	Ditto.	

Date of removal.	Marks.	No.	Quantity.	Description.	Vessel's name.	Remarks.
1902.	SHED No. 4—*concld.*					
April 14	No mark	...	1	Keg paint (broken)	S.S. "Rowa."	
„ 14	Ditto	...	1	Basket and a quantity of chalk.	Ditto.	
„ 21	60 in a diamond, L G on top & Co below.	...	1	Case ...	S.S. "Goldenfels"	H. G.
	Withdrawn from last sale.					
January 24	J T & Co	B 5960	1	Case ...	S.S. "Formosa."	
	SHED No. 5.					
February 10	P188 / 114 in a diamond, S B below, or P / 188 / 114 in a diamond.	...	1	Case ...	S.S. "Weildenfels"	
„ 10	II Red or Nil	...	13	Bars tee iron ...	Ditto.	
„ 10	XX Blue or Nil	...	1	Bundle angle iron ...	Ditto.	
„ 3	W L / Co in a block	...	1	Casting cover ...	S.S. City of "Cambridge."	
„ 3	No mark	...	4	C. I. pipes (broken)	Ditto.	
„ 15	Nilcomul Mittra and Sons ...	..	1	Case ...	S.S. "Craftsman."	
„ 24	A K, Dikorai below	2354	1	Do. ...	S.S. "Marienfels."	
„ 24	Herzberg Ranha, Purulia ...	67	1	Do. ...	Ditto.	
„ 24	P188 / 114 in a diamond, S B below ...	276-300	1	Do. ...	Ditto.	
„ 24	S T in a diamond or S T ...	2243	1	Do. ...	Ditto.	
„ 24	S B in a heart	...	1	Empty keg ...	Ditto.	
March 5	No mark	...	1	Cask coal tar (empty)	S.S. "Sangola" ...	H. G.
„ 5	S.S. "Euplectoia"	...	1	Drum (empty) ...	Ditto.	
„ 5	25-10 in a diamond, J H on top, or nil.	...	1	Bundle C. Iron ...	Ditto.	
„ 5	M & Co.	...	1	Cask cement ...	Ditto.	
„ 5	No mark	...	1	Case phials (half empty).	Ditto.	
„ 5	Ditto	...	1	Cask cement ...	Ditto.	
„ 15	Ditto	...	2	Tins provisions ...	S.S. "Massilia."	
„ 23	P S	...	3	Joists	S.S. "Golconda."	
„ 23	717 in an inverted triangle, M & Co. below.	91-105	15	Casks	Ditto.	
April 25	No mark	...	1	R. W. pipe ...	S.S. City of "Madrid."	
„ 25	Ditto	...	1	Loose hammer ...	Ditto.	
1901.	*Withdrawn from last sale.*					
November 19	Nil or Calcutta	...	13	Iron plates ...	S.S. "Clan MacArthur."	
December 18	D W & M Hamburg ...	811	1	Case	S.S. "Ehrenfels."	
1902.	SHED No. 7.					
February 4	No mark	...	1	Keg bolts and nuts...	S.S. "Magician."	
„ 4	Ditto	...	1	Keg soda ...	Ditto.	
„ 23	B C or nil	...	2	Bundles flat iron ...	S.S. City of "Bombay"	
April 3	No mark	...	1	Bundle C sheet ...	S.S. "Senator."	
„ 1	B E & Co in a diamond ...	50 or 1-50	1	Case sample ...	S.S. "Scharzfels."	
„ 1	112 / P in a diamond, T Co on top and S B below.	...	1	Ditto ...	Ditto ...	H. G.
„ 1	IV white or nil	...	1	Bar angle ...	Ditto.	
„ 1	J C / G or nil	...	1	Plate	Ditto.	

Date of removal.	Marks.	No.	Quantity.	Description.	Vessel's name.	Remarks.
	SHED No. 7—*concld.*					
1902.						
April 15	$\frac{U\ I}{C\ M\ C}$ in a diamond, Lucknow below (right side).	1	1	Case	S.S. "Corinth."	
„ 15	No mark	...	1	Bar square Iron ...	Ditto.	
„ 24	C or G J V H & Z ...	...	1	Parcel	S.S. "Soudan."	
„ 24	F L in a diamond ...	1 2	2	Cases	Ditto.	
„ 24	N M	...	1	Case	Ditto.	
1901.	*Withdrawn from last sale.*					
October 31	1474 or nil	...	4	Joists	S.S. City of "Cambridge."	
1902.	SHED No 8.					
February 12	8400 in a diamond	...	1	Case ...	S.S. "Scharlachbarger."	
„ 12	107 in a diamond	1313 or 176-200	1	Do. ...	Ditto.	
„ 12	P $\frac{188}{114}$ in a diamond, S B below ...	226-2 0 or 1312	1	Do. ...	Ditto.	
„ 12	$\frac{2}{7125}$ in a diamond	...	1	Do. ...	Ditto.	
„ 12	$\frac{2}{8458}$ in a diamond	...	1	Do. ...	Ditto.	
„ 12	No mark	...	10	Pieces pig iron ..	Ditto.	
„ 15	Daw & Co	6	1	Case ...	S.S. City of "Sparta."	
„ 15	No mark	...	1	Loose R.-W. pipe ...	Ditto.	
„ 15	Ditto	...	1	Case ...	Ditto.	
„ 15	Ditto	...	1	Cask (empty) ...	Ditto.	H. G.
„ 26	H P in a diamond	...	1	Case ..	S.S. "Bengali."	
March 8	No mark	...	14	E.-W. pipes ...	S S. City of "Benares."	
„ 18	No mark	.	6	R.-W. pipes ..	S S. City of "Athens."	
„ 18	Ditto	...	1	1 bag sweeping cement or fire-clay.	Ditto.	
April 29	K N R in a diamond, 54 below (right side).	...	10	Drums carbide of calcium.	S.S. "Schonfels" ..	K. P. D.
1901.	*Withdrawn from last sale.*					
November 25	E M & Co in a block, T W & Co on top or nil.	...	5	Casks coal tar ...	S S. "Clan Macferlane."	H. G.
1902.						
February 3	P in a diamond, P N below or nil.	...	...	A quantity of rosin	S.S. "Assyria" ...	H. G.
	Unidentified goods.					
	Nil	...	5	Bottles wine.		
April 9	Nil	...	7	Pieces pig iron and 21 iron bands.		
„ 14	Nil	...	1	Packet brass bow and nuts.		
	Nil	...	...	A quantity of hoops, ties and bands, &c.		
				A quantity of loose tin pieces.		
				A quantity of sundries in a case.		

Port Commissioners' Office, Calcutta, the 18th August 1902. (538—1) W. R. C. JEWELL, Dy. Traffic Manager, Port Commrs.

Statement of Government Promissory Notes enfaced for payment of Interest in London, under deduction of amount retransferred to India, and outstanding in the books of the Bank of Bengal on the 15th August 1902.

PARTICULARS.	3 per cent. of 1896-97.	2½ PER CENT. LOANS—							4 PER CENT. LOANS—							4½ PER CENT. LOANS—				GRAND TOTAL.
		Of 1842-43.	Of 1854-55.	Of 1865.	Of 1879.	Of 1893-94.	Of 1900-1901.	Total.	Of 1838-39.	Of 1835-36.	Of 1842-43.	Of 1854-55.	Transfer of 1865.	Reduced 4 per cent. loan of 1879.	Total.	Of 1870.		Transfer loan of 1879, 4½ per cent. portion.	Total.	
Balance of 31st July 1902	1,58,00,000	2,22,92,900	11,68,68,700	3,01,84,500	1,30,25,000	100	23,51,300	18,47,22,500	6,934	5,000	.....	15,500	40,800	5,700	73,934	5,000	...	29,500	34,500	20,06,30,934
ADD—																				
Amount enfaced at Madras up to 2nd August 1902 ...	2,000	1,000	6,000	.....	.....	.....	.....	9,000	.....	.....	.....	.....	.....	.....	.....	.....	...	.....	.....	11,000
Amount enfaced at Bombay up to 12th August 1902	.....	2,000	53,000	2,000	.....	.....	8,000	65,000	.....	.....	.....	.....	.....	.....	.....	.....	...	.....	.....	65,000
Amount enfaced at Calcutta between 1st and 15th August 1902	.....	15,500	.....	.....	45,000	.....	1,00,000	1,60,500	.....	.....	.....	.....	.....	.....	.....	.....	...	.....	.....	1,60,500
	1,58,02,000	2,23,11,400	11,69,29,700	3,01,86,500	1,30,70,000	100	24,59,300	18,49,57,000	6,934	5,000	.....	15,500	40,800	5,700	73,934	5,000	...	29,500	34,500	20,08,67,434
DEDUCT—																				
Amount written off in the London registers ...	.....	2,78,000	2,03,500	21,500	.....	.....	2,01,000	7,04,000	.....	.....	.....	.....	.....	.....	.....	.....	...	.....	.....	7,04,000
Balance on 15th August 1902	1,58,02,000	2,20,32,400	11,67,26,200	3,01,65,000	1,30,70,000	100	22,58,300	18,42,53,000	6,934	5,000	.....	15,500	40,800	5,700	73,934	5,000	...	29,500	34,500	20,01,63,434

[NOTE.—From 9th June 1867 to 15th June 1902—Enfaced from India 11,108 lakhs ; retransferred from London 10,442 lakhs.
" 16th " 1902 " 30th " " " " " 3 " " " " 23 "
" 1st July " " 15th July " " " " " 4 " " " " 11 "
" 16th " " " 31st " " " " " 15 " " " " 4 "
" 1st August " " 15th August " " " " " 2 " " " " 7 "
11,132 lakhs 16,487 "
10,487 "
Balance against India 645 "

E. HILDRETH,
Superintendent.

W. D. CRUICKSHANK,
Secretary and Treasurer.

(544—1)

PUBLIC DEBT OFFICE, BANK OF BENGAL,

Calcutta, the 16th August 1902.

Statement of the Affairs of the Bank of Bengal for the week ending 12th August 1902

LIABILITIES		Rs.	A.	P.	ASSETS		Rs	A	P
Capital paid up		2,00,00,000	0	0	Government Securities		1,58,47,547	0	0
Reserve Fund		1,14,00,000	0	0	Other authorised investments		66,13,270	0	0
Public Deposits at Head Office Rs. 70,00,656 13 3					Loans on Government and other authorised securities		2 75,03,896	9	8
Ditto ditto at Branches „ 1,26,60,311 10 8		1,96,60,968	7	11	Accounts of Credit on ditto ditto		1,49,50,782	3	0
Other Deposits at Head Office and Branches		8,82,01,253	13	7	Bills discounted and purchased		1,86,47,312	3	10
Bank Post Bills, &c.		4,26,548	4	0	Balances with other Banks		16,41,072	3	1
Sundries		13,18,810	15	0	Bullion		3,241	9	8
					Dead Stock		16,00,911	11	11
					Stamps		12,697	10	11
					Sundries		8,81,598	15	8
							8,77 05,381	3	9
					Cash and Currency Notes at Head Office* Rs. 2,84,94,629 6 11				
					Cash and Currency Notes at Branches† „ 2,48,08,170 13 10		5,33,02,200	4	9
Rupees		14,10,07,581	8	6	Rupees		14,10,07,581	8	6

* Includes Sovs. & ½ Sovs., value Rs. 1,17,375 0 0
† Do. do. do. „ 1,97,280 0 0
Rs. 3,14,655 0 0

By order of the Directors,
W. D. CRUICKSHANK,
Secretary and Treasurer.

E J. BIRCH,
Chief Accountant.

Rate for Demand Loans, 3 per cent.
Percentage 48·63.

BANK OF BENGAL
Calcutta, the 14th August 1902

(537—1)

Notice of Deaths sent to the Administrator-General of Bengal under section 64 of Act II of 1874.

Name of deceased.	Place of death.	Date of death.	By whom death reported, and when.	REMARKS.
Mrs. Esther Sutton, late a Matron of La Martiniere Girls' School.	Lucknow	June 1902	The District and Sessions Judge, Lucknow, on 31st July 1902.	No Will. No application.
John Joseph Lewis Lawrence Morrison, late a Tea-Planter.	Dhalagurí Tea Estate, Golaghat.	29th April „	The Officiating Judge of the Assam Valley Districts on 18th July 1902.	Will left. Mr. C Ingram is applying for Probate under General Power of Attorney from the deceased's sister.
Mr William Lyall, late of Malborough Hotel.	Presidency General Hospital	10th July „	The District Judge of 24-Parganas, Alipore, on 23rd July 1902.	Not known whether the deceased has left any Will. No application.
Mr Donald Delanougerede, late of No. 4-1 Sheriff Duffry's Lane	Ditto	5th „ „ „	Ditto ditto ...	Ditto ditto.
Mr H F Roles, late of No 43 Garden Reach.	Ditto ..	14th „ „ .	Ditto ditto	Ditto ditto.
Mr. G. F. Monteiro, late a pensioned Jailor.	District of Javoy	13th June „ ..	District Judge of Javoy on 30th June 1902.	No Will. No application.
Mr M Smith, late of Planters' Club, Muzaffarpur.	Planters' Club, Muzaffarpur.	15th Nov. 1901 .	District Judge of Tirhut on 3rd July 1902	The eldest son of the deceased has applied for Letters of Administration.

Calcutta, the 18th August 1902. HENRY T. HYDE, Administrator-General of Bengal.

Pure Sulphate of Quinine.

MANUFACTURED AT THE BENGAL GOVERNMENT CINCHONA PLANTATION.

FROM 1st April 1902 the price of this quinine will be as follows:—

1	Pound tin	Rs. 17,	or, post free,	Rs. 17 8
½	,,	,,	,,	8-8	,,	,,	,,	,,	8-14.
¼	,,	,,	,,	4-4	,,	,,	,,	,,	4-10

Analysis shows this quinine to be of the purest manufacture; and it is guaranteed to be free from wilful mixture with the inferior alkaloids, cinchonine and cinchonidine. It is for sale only to Government officers, and only for cash, and may be had from the Superintendent, Botanic Garden, Sibpur, near Calcutta.

Cinchona Febrifuge.

Cinchona Febrifuge can be purchased by all Government officers and by any one taking *six pounds* and upwards at a time from the Superintendent, Botanic Garden, Calcutta, for cash only at the following rates—

	Government officers.	General public.	Postage extra.
	Rs. A.	Rs.	As.
1 Pound tin ...	10 0	12	8
½ ,, ,, ...	5 0	6	6
¼ ,, ,, ...	2 8	3	4

MADHAVA CHANDRA CHATTERJEE, Government Pleader of Dinajpur, intends to be enrolled as a Vakeel of the High Court.

(457—4—997)

WANTED a Treasurer for the Khulna Treasury. Salary Rs. 80 per month. Applications will be received by the undersigned up to the 31st August 1902. The selected candidate will have to furnish security of Rs. 15,0 0 in Government Promissory Notes. None need apply who has had no experience of Treasury work.

S. C. MUKERJEE, Collector.

Khulna Collectorate, the 14th August 1902.

Bengal Uncovenanted Service Family Pension Fund.

ABSTRACT STATEMENT showing the result of votes on the question submitted in Circular No. 4 of 1902:—

For the retention in office of the five Directors, Messrs. H. W. Stevens, C. A. Tweeddale, E. H. Lloyd, Rivers Howe and H. A. Twidale...	580 votes.
For the removal from the diretion of the above five Directors ...	411 ,,

By order of the Board of Directors,

G. E. WARDE,
Secretary.

The 5th August 1902. (504—3)

Estate Mrs. C. Nicholas.

NOTICE.

A CERTIFICATE under section 36 of Act II of 1874 to the estate of Mrs. Catherine Nicholas, who died at Calcutta on or about the 16th May 1902, has been granted to Walter Charles Nicholas, Esq., Trades Assistant, of No. 20, Chaudney 1st Lane, Calcutta, as the husband of the deceased, to enable him to administer to the estate. All persons being indebted to, or having claims against, the estate should communicate with the said Walter Charles Nicholas.

HENRY T. HYDE, Administrator-General of Bengal.

7, Council House Street, Calcutta, the 18th August 1902. (578—1)

Estate John Charles Beahan, deceased.

PURSUANT to section 320 of Act X of 1865 and section 42 of Act XXVIII of 1866, notice is hereby given that all persons having claims against the Estate of John Charles Beahan, late of Tolain, in the State of Rajghur and Nursinghur, who died on the 11th day of February 1902, are, on or before the 28th day of August 1902, required to send in full particulars of their claim to Mrs. Katherine Emma Beahan, the widow and sole Executrix of the deceased at the Post Office, Mithapore, Bankipore, in the Province of Bengal, after which date no claim will be admitted and the assets of the Estate of the said deceased will be distributed.

WATKINS & Co,
Solicitors for Mrs. K. E. Beahan.

No. 2 Old Post Office Street, Calcutta, the 14th July 1902. (405—1—1009)

Estate Mrs. F. A. Sussex.

NOTICE.

A CERTIFICATE under section 36 of Act II of 1874 to the estate of Mrs. Florence Annie Sussex, who died intestate at Lucknow on the 8th of June 1901, has been granted to Sub-Conductor William Sussex, Chief Warder, Military Prison, Lucknow, the husband of the deceased, to enable him to administer the estate. All persons being indebted to or having claims against the estate should communicate with the said Sub-Conductor William Sussex.

HENRY T. HYDE, Administrator-General of Bengal.

7 Council House Street, Calcutta, 14th August 1902. (540—1)

Estate Janki Bewah.

NOTICE.

A CERTIFICATE under section 36 of Act II of 1874 to the estate of Janki Bewah, who died on the 29th Chaitra 1308, *i.e*, 12th April 1902, has been granted to Khetra Mohan Chandra, of No. 153 Sabharam Bysack's Lane, Calcutta, as the uterine brother of the deceased, to enable him to administer the estate. All persons being indebted to or having claims against the estate should communicate with the said Khetra Mohan Chandra.

HENRY T. HYDE, Administrator-General of Bengal.

7 Council House Street, Calcutta, 14th August 1902. (541—1)

Notice.

SEALED TENDERS for the conveyance of import, export and other Government stores, and for labour and the hire of boats for two periods—one of 1 year 2 months, from 1st January 1903 to 31st March 1904, and one for 3 years 3 months, from 1st January 1903 to 31st March 1906—will be received by the Agent for Government Consignments, Calcutta, up to noon on Friday, the 3rd October 1902.

Tenders should be superscribed "Tender for carrying contract for one year and three months" and "three years and three months," as the case may be.

Tenders must be prepared on forms to be obtained with full particulars from the undersigned on payment of one rupee for each form.

No tender will be received except on the prescribed form, and no additions or alterations must be made on the tender form.

Tenders must be supported by a Bank of Bengal or Treasury receipt for Rs. 700 as earnest-money. The earnest-money to be forfeited in the event of a tender withdrawn No tender will be received without a deposit of this earnest-money.

Tenders will be opened at noon on Friday, October 3rd, 1902, at No. 5 Strand Road, in the presence of tenderers by the undersigned, who does not bind himself to accept the lowest or any tender.

H. J. PATERSON, LIEUT., R.N.R.,
Offg. Agent for Govt. Consignments.

Calcutta, the 25th July 1902.

Currency Notes.

THE following Currency Note of the Calcutta Circle is stated to have been destroyed, and payment of its value has been claimed by the person whose name is placed against the number. Any other person claiming a right to it is warned to communicate at once with the undersigned:—

Note wholly destroyed.

Register No.	No. of Note.	Value. Rs	Name of claimant.
Ho78 of 1901-1902	$\frac{LA}{25}$ 61243	50	Abinash Chandra Poddar, care of Brojo Nath De, 25, Bonomali Sarkar's Street, Kumartuli, Calcutta.

F. C. BREWIN, Assistant Comptroller-General, in charge, Paper Currency.

Paper Currency Department, the 5th August 1902.

For Sale.

THE "Zoonzoonia Bhuttal" Tea Garden belonging to the estate of the late Karamali Meah, now under the management of the Court of Wards, Chittagong, will be sold to the highest bidder by the undersigned on the 8th September 1902, under the orders of the Board of Revenue, conveyed in their letter No. 91W., dated 9th July 1902. Persons intending to purchase the garden are invited to appear in the Chittagong Collectorate on the appointed day and bid for the same. The garden is conveniently situated on the fifth mile of the public road from Chittagong to Hathazari Its acreage is 125 acres, of which 25 acres are now under plantation. Further particulars about the garden may be obtained on reference to the General Manager, Court of Wards, Chittagong.

2. The sale will be postponed in case adequate bid is not obtained. One-fourth of the amount bid will have to be deposited immediately after the bid is accepted as earnest-money, and the remainder will have to be paid up within 30 days from the date of sale. On failure to comply with this condition, the earnest-money deposited will be forfeited.

P. E. CAMMIADE, Collector.

Chittagong, the 8th August 1902. (579—2)

Notification.

TO be peremptorily sold on Saturday, the 30th day of August 1902, at the hour of 12 o'clock noon, pursuant to a decree and order of the Calcutta High Court, made in suit No. 348 of 1898 (Gopal Chunder Biswas *versus* Sreemutty Kusum Kumari Dassee and others), and dated respectively 30th July 1900 and 21st January 1902, by the Registrar of the said Court, Original Jurisdiction, in his sale-room in the Court-house, the undermentioned property belonging to the defendants:—

All that undivided one-fifth share of and in the house and premises No. 222, Cornwallis Street in Calcutta, the entire premises containing 1 bigha 4 cottahs and 8 chittacks of land with two storied buildings erected on a part thereof, being block No. 15, holding No. 198, North Division, in the town of Calcutta, and paying an annual revenue of Rs 8-10 to the Collector of Calcutta, and butted and bounded on the north by Mooktaram Babu's Street, on the east partly by Gupta Press and partly by Cornwallis Street, on the south partly by the property belonging to Nripendra Chunder Dey and partly by the dwelling-house of Chundy Churn Naug, and on the west by Kallitollah Lane.

The abstract of title and conditions of sale may be seen at the office of the said Registrar and at the office of Babu Preonath Bose, Attorney-at-Law, No. 3, Old Post Office Street, on any day before the sale and will be produced at the sale.

W. R. FINK, Registrar.

Preonath Bose, Plaintiff's attorney.

High Court, Original Side, Calcutta, the 16th July 1902. (545—1—101)

Notification.

TO be peremptorily sold, pursuant to a decree and orders of the Calcutta High Court in its Ordinary Original Civil Jurisdiction, made in suit No. 34 of 1900 (wherein Benode Lall Roy and others are plaintiffs and Upendro Nath Srimani and another are defendants), and dated respectively the 1st day of March 1900, the 26th day of March 1901, the 26th day of August 1901, and the 7th day of June 1902, by the Registrar of the said Court, in his sale-room in the Court-house on Saturday the 30th day of August 1902, at the hour of 12 o'clock noon, the undermentioned property belonging to the defendants:—

All that undivided two-third part or share of and in the premises No. 73, formerly No. 33, Sukea's Street, being a two-storied brick-built dwelling-house, together with the piece or parcel of land thereunto belonging and on part whereof the same is erected and built (save and except the two cottahs of land lying to the west of the said dwelling-house and upon which land a new building is now being erected, and which belongs to Protap Chander Dey) the entire premises, being holding No. 170 in Block No. XIV of the North Division, in the town of Calcutta, and containing by admeasurement 6 cottahs 7 chittacks and 28 square feet, and for which entire premises an annual revenue of Re. 1-3 3 is paid to the Calcutta Collectorate, and which entire premises is butted and bounded on the north by premises belonging to Poolin Behari Bhaduri, on the south by Sukea's Street, on the east by the dwelling-house of Khetter Nath Lahiri and Shib Chander Bhattacharya, and on the west by the dwelling-house of Gopal Chander Roy.

The abstract of title and conditions of sale may be seen at the office of the Registrar, High Court, Original Side, or at the office of Babu Asita Kumer Guha, at No. 11, Old Post Office Street, Calcutta, on any day before the sale and will be produced at the sale

W. R. FINK, Registrar.

Asita Kumer Guha, Plaintiff's attorney,

Calcutta, High Court, Original Jurisdiction, the 21st day of July 1902. (579—1—1013)

Destroyed by white-ants

THE Government Promissory Note No. 066104 of the 3½ per cent. of 1842-43 for Rs. 100, originally standing in the name of Prosad Dass Bural and last endorsed to Srimutty Modon Mohini Dassee, the proprietress, by whom it was never endorsed to any other person. Payment of the above note and the interest thereupon have been stopped at the Public Debt Office, Bank of Bengal, and application is about to be made for the issue of duplicate in favour of the said proprietress.

GANES CHANDRA DE, Attorney for Sm. MOOND MOHINI DASSEE.

Calcutta, 1st August 1902. (493—3—1035)

Lost

THE Government Promissory Notes— Rs.

No. 096820,	3½ per cent. loan	of 1865 ...	500
„ 096821,	ditto	of 1865 ...	500
„ 096817,	ditto	of 1865 ...	500
„ 096531,	ditto	of 1865 ...	100

originally standing in the name of the Bank of Bengal, and last endorsed to Surendra Nath Ganguly, the proprietor, by whom they were never endorsed to any other person. Payment of the above Notes and the interest thereupon have been stopped at the Public Debt Office, Bank of Bengal, and application is to be made for accrued interest and for the issue of duplicates in favour of the proprietor after two years from the date of last advertisement.

Name of the Proprietress—RAJABALA DEBI.

Residence—Janai. (499—3—1001)

Notice.

List of unclaimed goods lying in the Custom House Wharf.

Vessels.	Marks and Nos.	Description of packages.	REMARKS.
S.S. "Orissa" ...	M M & Co. ...	1 Case ...	Unknown.
" "Islanda" ...	P E, bottom A or Nil.	2 Bundles coir yarn.	
" "India" ...	W M H or Nil ...	2 Casks ...	Unknown.
" "Henzada"	G. Morrison & Co., 4, Hastings Street.	1 Crate ...	"
" "Kerbella"...	C D J ...	1 Bag cowries.	
" "Okhla" ...	M A	4 Casks cocoanut-oil.	
" "Scindia" ...	M V in diamond, Port Elizabeth.	1 Bale coir fibre.	
" "Umquizi"	Nil	1 Bag salt fish.	
" "Chelydra"	202 top, S.S. in block.	1 Case	Unknown.
" "Kumsang"	Nil	1 Basket earthen-ware.	Broken.
" "Suisang" ...	Nil	1 Box empty bottles.	"
" "Kumsang"	S or Nil	1 Case empty bottles.	
" "Sunda" ...	A. S. Constantide	1 Chair	Cane.
" "A. Apcar"...	C. T. Dept.	1 "	
" "Goorkha"...	M. L. Westmacott	1 Trunk	Unknown.
" "Massilia" ...	Nil	1 Bath tub ...	Zinc.
" ...	Cantn. Wood ...	1 Chair	Deck.
" ...	Nil	1 "	"
" "Candia" ...	Stables	1 "	"
" "Malta" ...	H. Bamber ...	1 "	"
" ...	H. Bridge ..	1 "	"
" ...	L. Hicks ...	1 "	"
" ...	Oliver ...	1 "	"
" ...	H L R ..	1 "	"
" ...	C. H. Stewart ...	1 "	"
" ...	Nil ...	1 "	"
" ...	Nil ...	1 "	"
" ...	C. T. Gordon ...	1 "	"
" "E. F. Ferdinand,"	H. Bonckel	1 "	"
" "	A. Voist ...	2 Chairs	Cane.
" "Matiana"...	Mrs Elkington ...	1 Case	Unknown.
" "Massilia" ...	Bell	1 Bundle, 4 chairs.	
" "Pentakotta"	O. H. Elliott ...	1 Gun.	
" "	W. Wright ..	1 "	
" "Umta" ...	Hary Ram Sing ...	1 Sword.	
" "Madura" ...	Dr. Graham ...	1 Revolver.	
" "Workman"	A in diamond, top GA, bottom & Co., No. 3.	1 Case Revolver.	
" "	717 in inverted triangle, bottom M & Co., Nos. 913-1.	2 Cases Gun.	
" "Obra" ...	F in diamond ...	1 case dry fruits	Broken.
" "Eleora" ...	C C W ...	4 bundles wood.	
" "	N B ...	1 bundle chillies.	
" "Kumsang"	M M G in diamond	1 bag betel-nuts.	
" "Suisang" ...	M M G ...	1 " "	
" " ...	M M G ...	6 bags sago flour.	

The above will be sold if not cleared on or before the 5th September 1902.

L. F. MORSHEAD, Collector of Customs.

Calcutta, Custom House, the 19th August 1902.

INSOLVENT NOTICES.

In the Court for the Relief of Insolvent Debtors at Calcutta.

In the matter of RAJENDRA COOMAR BOSE, an insolvent

On Tuesday, the 15th day of July last, it was ordered that the matters of the petition of the said insolvent be heard on Tuesday, the 2nd day of September next, and that the said insolvent do then attend to be examined before the said Court.

K. M. Rakshit, Attorney. (513—2)

In the matter of KUNJA BEHARY CHUNDER, an insolvent.

On Tuesday, the 15th day of July last, it was ordered that the matters of the petition of the said insolvent be heard on Tuesday, the 2nd day of September next, and that the said insolvent do then attend to be examined before the said Court.

Raj Kissore Bysack, Attorney. (514—2)

In the matter of DWARKA DASS AJMIRAH, an insolvent.

On Monday, the 14th day of July last, it was ordered that the matters of the petition of the said insolvent be heard on Tuesday, the 2nd day of September next, and that the said insolvent do then attend to be examined before the said Court.

Fox and Mandal, Attorneys. (515—2)

In the matter of CHOONI LALL, an insolvent.

On Monday, the 14th day of July last, it was ordered that the matters of the petition of the said insolvent be heard on Tuesday, the 2nd day of September next, and that the said insolvent do then attend to be examined before the said Court.

Charu Chunder Bose, Attorney. (516—2)

In the matter of KHODABUX MULLICK and SULEIMAN MULLICK, insolvents.

On Saturday, the 12th day of July last, it was ordered that this matter be heard on Tuesday, the 2nd day of September next, and that the said insolvents do then attend to be examined before the said Court.

Fox and Mandal, Attorneys. (517—2)

In the matter of GUNPUT ROY and RADHA KISSEN insolvents.

On Wednesday, the 25th day of June last, in was ordered that Tuesday, the 2nd day of September next, be appointed for the further hearing of this matter, and that unless cause be shewn to the contrary on that day, the said insolvents be discharged personally as well as to their after-acquired property from all liabilities for debts, claims and demands of and against the said insolvents at the time of the filing of their petition for relief.

T. H. Wilson & Co., Attorneys. (518—2)

Chief Clerk's Office, the 11th day of August 1902.

In the matter of RAM TAHAL RAM KAHAR, an insolvents

On Wednesday, the 30th day of July last, it was ordered that the matters of the petition of the said insolvent be heard on Tuesday, the 25th day of November next, and that the said insolvent do then attend to be examined before the said Court.

S. C. Mitter, Attorney. (547—2)

In the matter of BEPIN BEHARY BOSE, an insolvent.

On Saturday, the 26th day of July last, it was ordered that the matters of the petition of the said insolvent be heard on Tuesday, the 25th day of November next, and that the said insolvent do then attend to be examined before the said Court.

Khogendra Nath De, Attorney. (548—2)

In the matter of SHAM LALL CHANDER, an insolvent.

On Wednesday, the 30th day of July last, it was ordered that the matters of the petition of the said insolvent be heard on Tuesday, the 2nd day of September next, and that the said insolvent do then attend to be examined before the said Court.

Manik Lall Seal, Attorney. (549—2)

In the matter of NITTYO GOPAUL DUTT, HURRY DASS DUTT, and TULSI CHARN DUTT, insolvents.

On Friday, the 18th day of July last, it was ordered that the matters of the petition of the said insolvents be heard on Tuesday, the 2nd day of September next, and that the said insolvents do then attend to be examined before the said Court.

Aukshay Kumar Mitter, Attorney. (550—2)

In the matter of ROBERT WILLIAM HENDERSON, an insolvent.

On Friday, the 18th day of July last, it was ordered that the matters of the petition of the said insolvent be heard on Tuesday, the 2nd day of September next, and that the said insolvent do then attend to be examined before the said Court.

Insolvent in person. (551—2)

In the matter of CLAUD CHARLES AUGIER, an insolvent.

On Friday, the 25th day of July last, it was ordered that the matters of the petition of the said insolvent be heard on Tuesday, the 2nd day of September next, and that the said insolvent do then attend to be examined before the said Court.

Insolvent in person. (552—2)

In the matter of JAMES GEORGE JEFFERSON, an insolvent.

On Saturday, the 2nd day of August instant, it was ordered that the matters of the petition of the said insolvent be heard on Tuesday, the 25th day of November next, and that the said insolvent do then attend to be examined before the said Court.

G. K. Ghose, Attorney. (553—2)

In the matter of THOMAS WATSON, an insolvent.

On Saturday, the 2nd day of August instant, it was ordered that the matters of the petition of the said insolvent be heard on Tuesday, the 25th day of November next, and that the said insolvent do then attend to be examined before the said Court.

Orr, Robertson, and Burton, Attorneys. (554—2)

In the matter of BHAGWAN DASS and MOHADEO, insolvents

On Monday, the 4th day of August instant, it was ordered that the matters of the petition of the said insolvents be heard on Tuesday, the 25th day of November next, and that the said insolvents do then attend to be examined before the said Court.

Kali Mohun Rakshit, Attorney. (555—2)

In the matter of NARAYAN CHETTY and MUTHU KARPUN CHETTY, son of the said NARAYAN CHETTY, of Amaravati Poodoor, in the district of Madura, in the Presidency of Madras, traders, lately carrying on business together as merchants at No 67, Canning Street, in the town of Calcutta, and at Jaffna in the Island of Ceylon under the name and style of Kana Roona Navana Narayan Chetty, insolvents.

On Wednesday, the 30th day of July last, it was, on the petition of Sitambaram Chetty, Kistnappa Chetty, Mayappa Chetty (senior) and Mayappa Chetty (junior),—all of Kuttayoor, in the district of Madura, in the Presidency of Madras, carrying on business together as merchants and bankers at No. 67, Canning Street aforesaid, under the name and style of Ana Kana Ana Nainappa Chetty, creditors of the said insolvents, adjudged that the said Narayan Chetty and Muthu Karpun Chetty have committed an act of insolvency under the provisions of the Act XI, Vic. Chapter XXI, and by another order of the same date the estate and effects of the said insolvents were vested in the Official Assignee.

J. C. Dutt, Attorney. (556—2)

In the matter of NRITYA GOPAUL GHOSE, an insolvent.

On Tuesday, the 1st day of July last, by an order of this Court the said insolvent was adjudged entitled to his personal discharge under the Act XI Vic., Chapter XXI, as to all persons named in his schedule as creditors or claiming to be creditors respectively.

P. N. Bose and Sirkar, Attorneys. (557—1)

In the matter of JOHN WILLIAM HODGES, an insolvent.

On Tuesday, the 1st day of July last, by an order of this Court the said insolvent was adjudged entitled to his personal discharge under the Act XI Vic, Chapter XXI, as to all persons named in his schedule as creditors or claiming to be creditors respectively

Fox and Mandal, Attorneys. (558—1)

In the matter of DENO NAUTH DEY, an insolvent.

On Tuesday, the 7th day of January last, by an order of this Court the said insolvent was adjudged entitled to his personal discharge under the Act XI Vic., Chapter XXI, as to all persons named in his schedule as creditors or claiming to be creditors respectively.

Jogneswar Sen and Ghosh, Attorneys. (559—1)

In the matter of GOPAL DASS MOOKERJEE, an insolvent.

On Tuesday, the 4th day of February last, by an order of this Court the said insolvent was adjudged entitled to his personal discharge under the Act XI Vic., Chapter XXI, as to all persons named in his schedule as creditors or claiming to be creditors respectively.

Askhoy Kumar Thakur, Attorney.

O. C. Gangooly, Attorney. (560—1)

In the matter of BEHARY LAUL DEY, an insolvent.

Notice that an application for an *ad-interim* protection order has been this day made by the said insolvent, and that such application will be heard and disposed of by the Acting Commissioner of the Insolvent Court on Monday, the 25th day of August instant, at the hour of half-past ten o'clock in the forenoon.

☞ Any creditor of the said insolvent desirous of opposing such application must appear before the said Court at the time and place aforesaid.

Sarut Chunder Dutt, Attorney. (561—1)

In the matter of AMBICA CHURN MOOKERJEE, an insolvent.

On Tuesday, the 3rd day of June last, it was ordered that the petition filed by the said insolvent on the 3rd day of January last seeking for relief under the provisions of the said Act be and the same is hereby dismissed, and that the vesting order made thereon be and the same is hereby discharged, provided always that all acts or things done by Albert Birmingham Miller, Esquire, the Official Assignee of this Court and the assignee of the estate and effects of the said insolvent or other person or persons acting under his authority prior to this order shall be good and valid, and shall not be annulled or in anywise affected thereby, and it was further ordered that the said Official Assignee do, upon payment to him of his commission, costs, charges, and expenses, deliver over to the said insolvent upon his receipt all the estate and effects, moneys, goods, books, and papers now remaining in his hands belonging to the estate of the said insolvent.

A. K. Thakur, Attorney. (562—1)

Lewis and Mitter, Attorneys for creditor No. 1.

In the matter of BEPIN BEHARY BOSE, residing at No. 70-1, Mooktaram Babu's Street, in the town of Calcutta, the sole surviving partner of the firm, lately carried on business at No 7, Swallow Lane in Calcutta as merchant and general order-supplier under the name, style, and firm of Mackenzie and Company, at present doing nothing, an insolvent.

Notice that the petition of the said insolvent seeking the benefit of the Act XI Vic., Chapter XXI, was filed in the office of the Chief Clerk on Saturday, the 26th day of July last, and by an order of the same date the estate and effects of the said insolvent were vested in the Official Assignee.

Khogendra Nath De, Attorney. (563—1)

In the matter of RAM TAHAL RAM KAHAR, at present residing at No. 50, Simla Street, in the town of Calcutta, formerly carrying on business as a seller of earthen pots, fuel, and kerosene oil, at Ghazipur, but now without employment, an insolvent.

Notice that the petition of the said insolvent seeking the benefit of the Act XI Vic, Chapter XXI, was filed in the office of the Chief Clerk on Wednesday, the 30th day of July last, and by an order of the same date the estate and effects of the said insolvent were vested in the Official Assignee.

S. C. Mitter, Attorney. (564—1)

In the matter of SHAM LALL CHUNDER, residing at No. 69, Phear's Lane in the town of Calcutta, at present employed as a clerk in the firm of Messrs. W. Figgis and Company, an insolvent.

Notice that the petition of the said insolvent seeking the benefit of the Act XI Vic., Chapter XXI, was filed in the office of the Chief Clerk on Wednesday, the 30th day of July last, and by an order of the same date the estate and effects of the said insolvent were vested in the Official Assignee.

Manik Lall Seal, Attorney. (565—1)

In the matter of HAZAREE MULL, residing at No. 78 Cross Street, Barra Bazar, in the town of Calcutta formerly carried on business in piece-goods at No. 31, Pogyapati, Barra Bazar, in Calcutta aforesaid, in co-partnership with Heera Lall, under the name, style, and firm of Heera Lall, Hazaree Mull, and of late also carried on business in piece-goods at No 31, Pogyapati, Barra Bazar in Calcutta aforesaid, under the name, style, and firm of Hazaree Mull, Chandan Mull; the latter, Chandan Mull, his infant son, having no share in the said business, now out of employ, an insolvent.

Notice that the petition of the said insolvent seeking the benefit of the Act XI Vic., Chapter XXI, was filed in the office of the Chief Clerk on Friday, the 8th day of August instant, and by an order of the same date the estate and effects of the said insolvent were vested in the Official Assignee.

Ramee Chandra Basu, Attorney. (566—1)

In the matter of BHAGWAN DASS and MOHADEO, both residing at No. 131, Harrison Road, in the town of Calcutta, lately carrying on business as general merchants at Khulna, in the district of Khulna, under the name and style of Bhagwan Dass, Mohadeo, at present having no occupation, insolvents.

Notice that the petition of the said insolvents seeking the benefit of the Act XI Vic., Chapter XXI, was filed in the office of the Chief Clerk on Monday, the 4th day of August instant, and by an order of the same date the estate and effects of the said insolvents were vested in the Official Assignee.

Kali Mohun Raksbit, Attorney. (567—1)

In the matter of JAMES GEORGE JEFFERSON, residing at No. 98, Collinga Bazar Street, in the town of Calcutta, formerly a general order-supplier and a commission agent and at present without any employment, an insolvent.

Notice that the petition of the said insolvent seeking the benefit of the Act XI Vic., Chapter XXI, was filed in the office of the Chief Clerk on Saturday, the 2nd day of August instant, and by an order of the same date the estate and effects of the said insolvent were vested in the Official Assignee.

G. K. Ghosh, Attorney. (568—1)

In the matter of THOMAS WATSON of No. 6, Russell Street, Calcutta, tea and produce broker, carrying on business at No. 1, Hare Street, Calcutta, in the name of Messrs. Watson, Sibthorpe & Co., an insolvent.

Notice that the petition of the said insolvent seeking the benefit of the Act XI Vic., Chapter XXI, was filed in the office of the Chief Clerk on Saturday, the 2nd day of August instant, and by an order of the same date the estate and effects of the said insolvent were vested in the Official Assignee.

Orr, Robertson, and Burton, Attorneys. (569—1)

In the matter of JOSEPH HYAAM ELIAS, carrying on business at No. 263, Dalhousie Street, in Rangoon, as a shop-keeper and general merchant under the name and style of E. J. Elias & Co., a trader, an insolvent.

Notice that the petition of the said insolvent seeking the benefit of the Act XI Vic., Chapter XXI, was filed in the office of the Chief Clerk on Friday, the 1st day of August instant, and by an order of the same date the estate and effects of the said insolvent were vested in the Official Assignee.

Debendra Nath Bose, Attorney. (570—1)

In the matter of JUGGUT CHUNDER DUTT and HARENDRO KUMAR GUHO, both residing at No. 13, Basack Lane, in the town of Calcutta, and recently carrying on business in co-partnership as piece-good merchants at No. 23, Puggiaputty in Barra Bazar, in the town of Calcutta, under the name, style, and firm of the late Trailakhya Nath Mitter, at present doing nothing, insolvents.

Notice that the petition of the said insolvents seeking the benefit of the Act XI Vic., Chapter XXI, was filed in the office of the Chief Clerk on Friday, the 1st day of August instant, and by an order of the same date the estate and effects of the said insolvents were vested in the Official Assignee.

Khogendro Nath De, Attorney. (571—1)

In the matter of ROBERT WILLIAM HENDERSON, an employé of MESSRS. BIRD & Co, residing at No. 13, Pipe Road, Kidderpore, in the suburbs of the town of Calcutta, a European British subject, an insolvent.

Notice that the petition of the said insolvent seeking the benefit of the Act XI Vic., Chapter XXI, was filed in the office of the Chief Clerk on Friday, the 18th day of July last, and by an order of the same date the estate and effects of the said insolvent were vested in the Official Assignee.

Insolvent in person. (572—1)

In the matter of ISWAR DAS, residing at No. 41, Upper Chitpur Road, in the town of Calcutta, lately carrying on business as a country-produce-broker, at present out of employ and a prisoner on the civil side of the Presidency Jail, an insolvent.

Notice that the petition of the said insolvent seeking the benefit of the Act XI Vic, Chapter XXI, was filed in the office of the Chief Clerk on Saturday, the 12th day of July last, and by an order of the same date the estate and effects of the said insolvent were vested in the Official Assignee.

O. C. Gangooly, Attorney. (573—1)

In the matter of PRAN KRISTO NUNDY, residing at No. 24, Punchanuntollah Lane, in the town of Calcutta, and carrying on business as dealer in hosiery, under-shirts, &c., at Nos. 171 and 172, Old China Bazar Street, in Calcutta aforesaid, under the name and style of Pran Kristo Nundy, an insolvent.

Notice that the petition of the said insolvent seeking the benefit of the Act XI Vic., Chapter XXI, was filed in the office of the Chief Clerk on Monday, the 14th day of July last, and by an order of the same date the estate and effects of the said insolvent were vested in the Official Assignee.

Nafar Lall Mullick, Attorney. (574—1)

In the matter of NITTYO GOPAUL DUTT, HURRY DAS DUTT, and TULSI CHARN DUTT,—all residing at No. 46 Baniatollah Street, in the town of Calcutta, lately carrying on business of manufacturing oil at No 48, Baniatollah Street in Calcutta aforesaid, under the name, style, and firm of Sarat Chander Dutt, at present having no employment, insolvents.

Notice that the petition of the said insolvents seeking the benefit of the Act XI Vic., Chapter XXI, was filed in the office of the Chief Clerk on Friday, the 18th day of July last, and by an order of the same date the estate and effects of the said insolvents were vested in the Official Assignee.

Aukshay Kumar Mitter, Attorney. (575—1)

In the matter of CLAUD CHARLES AUGIER of No. 79, Dhurramtollah Street, in the town of Calcutta, employed in the Rivers Steam Navigation Company Calcutta, an Engineer, an insolvent.

Notice that the petition of the said insolvent seeking the benefit of the Act XI Vic., Chaptor XXI, was filed in the office of the Chief Clerk on Friday, the 25th day of July last, and by an order of the same date the estate and effects of the said insolvent were vested in the Official Assignee.

Insolvent in person. (576—1)

In the matter of RADHA KISSEN MEMANY, carrying on business under the name of Radha Kissen Jettmull, at No. 359, Monohar Dass' Kutra, Burra Bazar, in the town of Calcutta, as a dealer in prints, an insolvent.

Notice that the petition of the said insolvent seeking the benefit of the Act XI Vic., Chapter XXI, was filed in the office of the Chief Clerk on Thursday, the 17th day of July last, and by an order of the same date the estate and effects of the said insolvent were vested in the Official Assignee.

T. H. Wilson & Co., Attorneys.

Chief Clerk's Office, the 18th day of August 1902. (577—1)

In the matter of MEHJENDRA LALL SHAW, an insolvent.

Notice that an application for an *ad interim* protection order has been this day made by the said insolvent, and that such application will be heard and disposed of by the Acting Commissioner of the Insolvent Court on Monday, the 25th day of August instant, at the hour of half-past 10 o'clock in the forenoon.

☞Any creditor of the said insolvent desirous of opposing such application must appear before the said Court at the time and place aforesaid.

A. K. Thakur, Attorney. (580—1)

In the matter of DURGA DUTT AND JOWALA DUTT, insolvents.

On the 13th day of August instant, it was specially ordered that this matter be set down for hearing on Tuesday, the 2nd day of September next, with liberty to the said insolvents at the said hearing to apply that the petition seeking for relief filed in this matter on the 25th day of June last be withdrawn, and that the vesting order made thereon be discharged. And it was further ordered that notice of the day so appointed for the said hearing and of the said application be served upon all the creditors of the said insolvents by the messenger of this Court.

Charu Chundra Basu, Attorney.

CHIEF CLERK'S OFFICE, the 19th day of August 1902. (581—1)

Notice.

In the matter of Samuel Adolphus Hazrah, insolvent.

SAMUEL ADOLPHUS HAZRAH, son of late J. M. Hazrah, Clerk, Surveyor-General's Office, of Intally, Hathibagan, thana Bantapukur, district 24-Parganas, was declared insolvent on the 21st July 1902. Creditors to prove their claims on the 30th August 1902.

KALI PODO MUKHERJEA,

Munsif, 1st Court, Sealdah, vested with powers under sections 344-359 of the Civil Procedure Code. (497—1—1012)

Notice.

In the matter of Abdul Sobhan, insolvent.

ABDUL SOBHAN, son of late Halal Khuri of Barnispara, thana Itally, district 24-Parganas, was declared insolvent on the 12th July 1902. Creditors to prove their claims on 12th September 1902.

KALI PADA MUKERJEE, Munsif, 1st Court, Sealdah, vested with powers under sections 344—359, Civil Procedure Code.

Sealdah, the 13th August 1902. (542—1—1010)

CALCUTTA POST OFFICE NOTICE.

Mails for—	Date and hour of closing at the General Post Office, Calcutta.		Route by which despatched.
	1902	P.M.	
United Kingdom, Aden, Egypt, Europe, America, West Africa *vid* United Kingdom and East Africa *vid* Aden (and also South Africa, if superscribed on the cover *vid* United Kingdom or Aden).	21st Aug.	At 6-30	Per P. & O. steamer from Bombay
Parcels and money-orders for the United Kingdom and other Foreign places.	20th ,,	Parcels P.M. At 5 M.-O. P.M. At 4	Ditto ditto.
*Australasian Colonies ...	25th ,,	,, 7-30	*Vid* Tuticorin and Colombo.*
Straits Settlements (also China and Japan, if the steamer's name is superscribed on the cover).	22nd ,,	,, 8-30	Per steamer *Kumsang*.
Burma ,, ...	21st ,,	,, 7-30	Per B. I. S. N. Co.'s steamer.
Burma, Penang and Singapore.	23rd ,,	,, 7-30	Ditto ditto.
Akyab, Kyaukpyu and Sandoway.	23rd ,,	,, 7-30	Ditto ditto.
Burma, Tavoy and Mergui ...	25th ,,	,, 7-30	Ditto ditto.
Mauritius, Réunion, Mayotte, and Nossi-Be.	20th ,,	,, 7-30	Per steamer *India* from Colombo.
Port Blair	23rd ,,	,, 7-30	*Vid* Rangoon.
South Africa (Letters)	20th ,,	,, 7-30	Per steamer *Umzinto* from Colombo.
Ditto (Parcels for Natal and Cape Colony only).		,, 5	

* Although the date entered in column 2 is, as far as can be calculated, the latest safe date of posting for the next Mail steamer, full allowance being made for the steamer being in advance of her published timing, Mails for the places mentioned in column 1 are despatched daily to Colombo, so that they may proceed by any steamer that has been unusually accelerated or retarded, or by any special opportunity that may be afforded by a steamer not belonging to one of the regular lines.

† Correspondence for China and Japan is despatched daily to Colombo, so that they may proceed by the first steamer available.

1. The letter-box for Inland articles will be cleared for the forenoon Mails at the following hours:—

For Goalundo, Arakan and Chittagong, at 5-30 A.M.
For Midnapore and Orissa districts, at 8-30 A.M.
For the Eastern districts, as far as Dacca and Mymensingh, at 6-30 A.M.
For Khulna and Jessore districts, at 7-30 A.M.
For Bombay, Central Provinces and Midnapore, *vid* Bengal-Nagpur Railway, at 10-45 A.M., and with a late fee of ½ anna up to 11-35 A.M.

2. The letter-box will be cleared for the evening Mails at th following hours, viz.—

For the East Indian Railway Loop Mail, at 2-30 P.M., and with a late fee of ½ anna up to 2-55 P.M.
For the Northern Bengal, Darjeeling and Assam Mails, at 3-25 P.M., and with a late fee of ½ anna up to 3-50 P.M.
For the Bombay Mail, *vid* Jubbulpore, at 6 P.M., and with a late fee of ½ anna up to 6-30 P.M.
For the Punjab Mail, at 7-30 P.M.) and with a late fee of ½ anna up to 8 P.M. and with a late fee of 1 anna up to 8-45 P.M.
For Midnapore, Orissa and Madras Presidency, at 7-30 P.M.
For the Khulna Mail, at 7-30 P.M.
For the Eastern Bengal Mail, at 7-30 P.M.

3. Late registered letters will be received between the following hours:—

For the Bombay Mail, *vid* Jubbulpore, from 5 P.M. to 6-15 P.M.
For the Punjab Mail, from 6 P.M. to 7 P.M.
For the Eastern Bengal Mail, from 6 P.M. to 7 P.M.
For the Khulna Mail, from 6 P.M. to 7 P.M.
For Midnapore, Orissa and the Madras Presidency, from 6 P.M. to 7 P.M.

NOTE.—The late fee on each registered letter will be 2 annas which must be prepaid in stamps on the letter.

4. Articles for Burma and for Port Blair by sea are received without late fee up to 7-30 P.M., and with a late fee of ½ anna up to 8 P.M.

5. On the latest safe day of despatch of Mails for the Australasian Colonies or any other Foreign Countries, *vid* Madras or Tuticorin, the letter box for Foreign articles will be cleared for the last time at 7-30 P.M., and late letters and papers fully prepaid will be received up to 8-45 P.M.

6. On the day of despatch of the Mail for Europe (Thursday), the letter-box for Foreign articles will be cleared for the last time, for articles without the late fee, at 6-30 P M., and late letters and papers fully prepaid will be received up to 6-45 P M. Late registered articles will be received from 5 to 6 P.M On other days the letter-box for Foreign articles will be cleared for the last time, without the late fee, at 6 P M, and late letters and papers will be received up to 6-30 P M. for despatch by any Foreign Mails, *vid* Bombay, the same night and up to 8-30 P.M., late letters and papers up to 9 P M., for any Foreign Mails despatched by sea. Foreign Mails for despatch *vid* Madras or Tuticorin are received up to 7-30 P.M., and with a late fee up to 8-45 P.M. The late fee for Foreign articles is 4 annas, which must be prepaid in stamps affixed to the articles.

JOHN OWENS,
Presidency Postmaster.

CALCUTTA G. P. O.,
The 19th August 1902.

NADIA RIVERS.

Report showing the least depths of water for the week ending Friday, the 8th August 1902.

Name of River.	Reach of river.	Least depth of water soundings.		Remarks.
		Ft.	in.	
Bhagirathi.	Entrance from Ganges ..	19	6	
	Thence to Giriah ...	16	0	Momintola.
	From Giriah to Jangipur ...	15	9	Laikhandiar.
	,, Jangipur to Berhampore	16	0	Berhampore.
	,, Berhampore to Katwa	16	0	Mirzapur.
	,, Katwa to Nadia ...	18	0	Dewangunge.
Bhyrab-Jalangi.	Entrance from Ganges ...	16	0	
	Thence to Akriganj	16	0	Chakharpara.
	Akriganj to junction of the Bhyrab and Jalangi	16	0	Mohanpur.
	Thence to Patkabari	21	6	Tiakata.
	Patkabari to Nadia	17	6	Palashipara.
Matha-bhanga.	Entrance from Ganges ...	15	3	
	Thence to Dewanganj	15	9	Jamalpur.
	From Dewanganj to Shikarpur	16	0	Koormipara.
	,, Shikarpur to Boalia ...	16	0	Hoonapara.
	,, Boalia to Chuadanga ...	17	6	Maheshpur.
	,, Chuadanga to Kissenganj and Hanskhali..	16	6	Shyampur.

Gauge Readings.

	Locality.	Date.	Hour.	Height above zero.	Height above mean sea level.	Remarks.
			A.M.	Ft.	Ft.	
Ganges ...	Sahebganj ...	8-8-1902	6	20·25	88·25	Rise.
	Rampur Boalia...	9-8-1902	Noon	20·10	62·10	De.
	Entrance of Bhagirathi Geriah ..	10-8-1902	A.M. 7	...	70·75	Fall.
	Entrance of Bhyrub Jalangi Akhriganj ...	8-8-1902	A.M. 7	...	60·20	Do.
Bhagirathi.	Entrance of Mathabhanga ...	8-8-1902	...	19 84	...	Rise
	Jangipur ...	10-8-1902	...	...	68·80	Steady.
	Berhampore ...	11-8-1902	A.M. 10	24·75	58·50	Fall.
	Katwa ...	9 8-1902	P.M. 6	29 40	44 56	Rise.
Jalangi	Krishnagar ...	8-8-1902	...	23·25	...	Do.
	Sarupganj ...	9-8-1902	Noon	...	25·60	Do
Matha-bhanga.	Hanskhali ...	9-8-1902	...	18 40	...	Do.

A. K. BANERJEE, *Accts.*,
For *Exe. Engr., Nadia Rivers Division.*
Berhampore, the 11th August 1902.

Nadia Rivers.

Report showing the least depths of water for the week ending Friday, the 15th August 1902.

Name of River.	Reach of River.	Least depth of water soundings.		Remarks.
		Ft.	in.	
Bhagirathi.	Entrance from Ganges ...	20	0	
	Thence to Nurpur ...	13	0	Momentola.
	From Nurpur to Jangipur ..	15	6	Laikhandiar.
	,, Jangipur to Berhampore	14	9	Teghari.
	,, Berhampore to Katwa ..	16	0	Mirzapur.
	,, Katwa to Nadia ...	20	0	Hazrapota.
Bhairab-Jalangi.	Entrance from Ganges ...	16	0	
	Thence to Akriganj ..	19	0	Chakharpara.
	Akriganj to junction of the Bhairab and Jalangi	19	0	Khalsapara.
	Thence to Patkabari	21	0	Lalnagar.
	Patkabari to Nadia	18	0	Palaspara.
Matha-bhanga.	Entrance from Ganges ...	14	3	
	Thence to Dewanganj ...	15	0	Jamalpur.
	From Dewanganj to Shikarpur	15	0	Moorna.
	,, Shikarpur to Boalia ...	16	0	Kadipur.
	,, Boalia to Chuadanga ...	17	3	Bhangbaria.
	,, Chuadanga to Kissenganj and Hanskhali ...	16	0	Shyampur.

Gauge Readings.

	Locality.	Date.	Hour.	Height above zero.	Height above mean sea-level.	Remarks.
			A.M.	Ft.	Ft.	
Ganges ...	Sahibganj ..	16-8-1902	6	19 33	87·35	Fall.
	Rampur Boalia	16-8-1902	Noon	19·34	61·34	Do.
	Entrance of Bhagirathi Geria ...	17-8-1902	A.M. 7	...	70·40	Do.
	Entrance of Bhairab-Jalangi Akrigan) ...	17-8-1902	A.M. 7	...	59·75	Do.
Bhagirathi.	Entrance of Mathabhanga ...	15 8-1902	...	19·42	...	Do.
	Jangipur ..	17-8-1902	...	...	67·35	Do.
	Berhampore ...	18 8-1902	A.M. 10	23·84	57·50	Do.
	Katwa ...	15-8-1902	P.M. 6	23·70	44·86	Rise.
Jalangi ...	Krishnagar ...	15-8-1902	...	22·42	...	Fall.
	Sarupganj ...	16-8-1902	Noon	...	25·70	Rise.
Matha-bhanga.	Hanskhali ...	16-8-1902	...	18·05	...	Fall.

A. K. BANERJEE, *Accts.*,
for *Exe. Engr., Nadia Rivers Division.*
Berhampore the 18th August 1902.

Parts I, II, and III of a Descriptive Catalogue of the Sanskrit Manuscripts in the Library of the Calcutta Sanskrit College, prepared by Pandit Hrishikesa Sastri and Babu Siva Chandra Gui, M.A., B.L., of that College are offered to the public for sale. The Catalogue is to be completed in 28 parts, the price of each part being 12 annas a copy, exclusive of postage. Copies can be obtained, from the Principal of the Sanskrit College, Calcutta.

GOVERNMENT PUBLICATIONS FOR SALE

At the Bengal Secretariat Book Depot, Writers' Buildings, Calcutta, and by the following Agents :—

AGENTS IN INDIA.

Messrs Thacker, Spink & Co., Calcutta and Simla.
Messrs. Newman & Co., Calcutta.
Messrs. Higginbotham & Co., Madras.
Messrs. Thacker & Co., Ld., Bombay.
Messrs. A J. Combridge & Co., Bombay.
Mr. E. Seymour Hale, 53 Esplanade Road, Fort, Bombay, and Calcutta.
The Superintendent, American Baptist Mission Press, Rangoon.
Messrs. S. K. Lahiri & Co., Printers and Booksellers, College Street, Calcutta.
Rai Sahib M. Gulab Singh & Sons, Proprietors of the Mufid-i-am Press, Lahore, Punjab.
Messrs. V. Kalyanarama Iyer & Co., Booksellers, &c., Madras.
Messrs. D B Taraporevala Sons & Co., Booksellers, Bombay.

AGENTS IN ENGLAND.

Mr. E. A. Arnold, 37 Bedford Street, Strand, London.
Messrs. Constable & Co., 2 Whitehall Gardens, London.
Messrs. Sampson Low, Marston & Co., St. Dunstan's House, Fetter Lane, London.
Messrs. Luzac & Co, 46 Great Russell Street, London.
Messrs. Kegan Paul, Trench, Trübner & Co., Charing Cross Road, London.
Mr B. Alfred Quaritch, 15 Piccadilly, London.
Messrs. P S. King & Son, 2 & 4 Great Smith Street, Westminister, London.
Messrs. H S King & Co., 65 Cornhill, London.
Messrs. Williams and Norgate, Oxford.
Messrs. Deighton Bell & Co., Cambridge.

AGENTS ON THE CONTINENT.

Messrs R. Friedländer & Sohn, Berlin, N. W. Carlstrasse, 11.
Mr. Otto Harrassowitz, Leipzig.
Mr. Karl Hiersemann, Leipzig.
Mr. Ernest Leroux, 28 Rue Bonaparte, Paris.
Mr. Martinus Nijhoff, The Hague.

NOTICE.—Books required for private use can be purchased Applications should be accompanied by a remittance in each case.

All remittances on account of subscriptions to, or prices of, Gazettes, Indian Law Reports or other Government publications available for sale at the Bengal Secretariat Book Depôt, or for cost of advertisements published in the Gazettes should, in future, be made payable to the "Treasurer, Bengal Secretariat, Calcutta." Advices of such remittances, if separately sent, should be addressed to the "Accountant, Bengal Secretariat." All advertisements intended for publication in the *Calcutta* or *Bengali Gazette* should be sent direct to the Superintendent, Government Printing, Bengal.

Books required for the Public Service should be obtained through the Heads of Departments.

☞ *The amounts within parentheses are for packing and postage.*

NEW PUBLICATIONS ISSUED DURING THE CURRENT QUARTER.

APPOINTMENT DEPARTMENT.

Quarterly Civil List of Bengal, corrected up to 1st July 1902. Super-Royal 8vo. Paper cover. Rs. 3. (4*a.*)

GENERAL DEPARTMENT.

Report of Emigration from the Port of Calcutta to British and Foreign Colonies, 1901. By the Protector of Emigrants, Calcutta. F'cap. Paper cover. 12*a.* (1*a.*)
Civil Engineering College, Sibpur, Calendar for 1902. Royal 8vo. Paper cover. 12*a.* (2*a.*)
Annual Report on Inland Emigration for the year 1901. F'cap. Paper cover. 8*a.* (1*a.*)
Annual Report on the Reformatory Schools at Alipore and Hazaribagh for the year 1901. F'cap. Paper cover. 4*a.* (1*a.*)

JUDICIAL DEPARTMENT.

Annual Report on the Police Administration of the Town of Calcutta and its Suburbs for the year 1901. F'cap. Paper cover. Re. 1. (1*a.*)

LEGISLATIVE DEPARTMENT.

The Bengal Vaccination Act, 1880 (Bengal Act V of 1880), as modified up to 1st June 1902. Royal 8vo. Paper cover. Price 4*a.* (1*a.*)
The Salt Act, 1864 (Bengal Act VII of 1864), as modified up to 1st July 1902, with an appendix showing the extent to which the Indian Salt Act, 1882, is in force in Bengal. Royal 8vo. Paper cover. 3*a.* (1*a.*)

MUNICIPAL DEPARTMENT.

Triennial Report on the working of the Charitable Dispensaries under the Government of Bengal and the Calcutta Medical Institutions for the years 1899, 1900 and 1901. F'cap. Paper cover. Rs. 5. 3*a.*)
Thirty-fourth Annual Report of the Sanitary Commissioner for Bengal for the year 1901. F'cap. Board. Paper cover. Re. 1-2, (3*a.*)
Fifth Triennial Report of Vaccination in Bengal during the years 1899-1900, 1900-1901, and 1901-1902 F'cap. Paper cover. Re. 1. (1*a.*)

POLITICAL DEPARTMENT.

Administration Report on the Jails of Bengal for the year 1901. F'cap. Board. Paper cover. Rs. 3. (3*a.*)

PUBLIC WORKS DEPARTMENT.

Electric Traction.—Six lectures delivered in March 1902 at the Civil Engineering College, Sibpur, by J. W. Meares, Esq., Electrical Engineer to the Government of Bengal. Royal, 8vo. Full cloth. Re. 1-8. (2*a*.)

Classified List and Distribution Return of Establishment of the Public Works Department, Bengal, corrected up to 30th June 1902. Super-Royal 8vo. Paper cover. 4*a*. (1*a*.)

A Manual for the guidance of the staff of the Revenue Division of the Sone Canals. By H. TOOGOOD, Esq., Superintending Engineer, Sone Circle. Royal 8vo Board Paper cover. Re. 1. (2*a*.)

REVENUE DEPARTMENT.

Season and Crop Report of Bengal for the year 1901-1902. F'cap. Paper cover. 8*a*. (1*a*.)

The Sale Law Manual, a Manual of the Revenue and the Patni Sale Laws with Notes and the rules, &c., under them. Royal 8vo. Board. Paper cover. Re. 1-4. (3*a*.)

Price-list of staple food-crops in the local areas of Bengal, for the period from 1st January to 31st March 1901. F'cap. Board. Paper cover. Re 1. (2*a*.)

Rules for the keeping and inspection of accounts of collections in Government and Wards' Estates. Published under the authority of the Board of Revenue, L. P. Royal 8vo. Board. Paper cover. As. 8. (1*a*.)

The Government Estates' Manual, 1902. Royal 8vo. Board. Paper cover. Re. 1. (3*a*.)

PUBLICATIONS ISSUED BETWEEN THE 1ST JANUARY AND THE 30TH JUNE 1902.

APPOINTMENT DEPARTMENT.

Quarterly Civil List of Bengal corrected up to 1st April 1902. Super-royal 8vo. Paper cover. Price Rs. 3. (4*a*.)

FINANCIAL DEPARTMENT.

The Stamp Manual, 1902. A Manual for the guidance of officers in the administration of the Stamp Department. Royal 8vo Board. Paper cover. Price Re. 1-8. (6*a*.)

Annual Report on the consumption of Stationery in Bengal during 1900-1901. F'cap. Paper cover. Rs. 3. (2*a*.)

GENERAL DEPARTMENT.

List of Officers in the Subordinate Educational Service, Bengal, corrected up to 1st April 1902. F'cap. Paper cover. 8*a*. (1*a*.)

JUDICIAL DEPARTMENT.

Question Papers set at the Pleadership and Muktearship Examinations for the year 1902. Royal 8vo. Paper cover. Price 2*a*. (1*a*.)

Question Papers set at the Examination of candidates for appointment as Sub-Inspectors of Police. July and November 1901. Royal 8vo. Paper cover. Price 5*a*. (1*a*.)

Question Papers set at the Examination of candidates for recruiting the staff of Superior Police Officers in Bengal and Assam, held in November 1901. Royal 8vo. Paper cover. Price 8*a*. (1*a*.)

LEGISLATIVE DEPARTMENT.

The Court of Wards' Act, 1879 (Bengal Act IX of 1879), in Hindi, as modified up to the 1st July 1901. Royal 8vo. Paper cover. Price 6*a*. (1*a*.)

The Calcutta Port Act, 1890 (Bengal Act III of 1890), as modified up to 1st April 1902. Royal 8vo. Paper cover. Price 10*a*. (1*a*.)

MUNICIPAL DEPARTMENT.

Annual Returns of the Lunatic Asylums in Bengal with brief notes for the year 1901. Compiled by the Inspector-General of Civil Hospitals. F'cap Paper cover. Price Re. 1. (2*a*.)

Account Rules under the Local Self-Government Act, Part VIII. F'cap. Paper cover. Price 8*a*. (.)

Annual Report of the Chemical Examiner's Department, Bengal, 1901. F'cap. Paper cover Price 8*a*. (2*a*.)

PUBLIC WORKS DEPARTMENT.

Distribution Return of Officers and Subordinates employed on Local Works in Bengal, corrected up to 31st December 1901. Super-royal 8vo. Paper cover. Price 2*a*. (1*a*.)

Embankment and Drainage Report of the Government of Bengal, Irrigation Department, for the year 1900-1901. F'cap. Boards Paper cover. Price Rs. 2 (3*a*.)

Classified List and Distribution Return of Establishment corrected up to 31st March 1902. Super-royal 8vo. Paper cover. Price 4*a*. (1*a*.)

Dacca Electric Lighting License, 1902. F'cap. Paper cover. Price 14*a*. (1*a*.)

Notes on the construction of Railways in India (for students) with 5 charts. F'cap. Paper cover. Price Re. 1. (1*a*.)

REVENUE DEPARTMENT.

Annual Report of the Burdwan Experimental Farm for the year 1900-1901. F'cap. Paper cover. Price 3*a*. (1*a*.)

Annual Report on the Survey Operations in Bengal during the year 1900-1901 (from 1st October 1900 to 30th September 1901) F'cap. Paper cover. Price Re. 1-8. (2*a*.)

Annual Report of the Director of the Department of Land Records, Bengal, on Settlements, for the year ending 30th September 1901 F'cap. Paper cover Price 8*a*. (1*a*.)

The Practice and Procedure Manual, published under the authority of the Board of Revenue. Royal 8vo. Board. Paper cover. Price 12*a*. (3*a*.).

OLDER PUBLICATIONS.

A General Catalogue of all Government Publications (corrected up to 31st December, 1901) may be obtained *gratis* on application to the Officer in charge, Bengal Secretariat Book Depôt.

Publications for sale at the office of the Chief Inspector of Explosives with the Government of India.

Rules for the manufacture, possession and sale of explosives issued by each of the Local Governments and Administrations. Price 12*a*.

Rules for the transport and importation of explosives issued by the Government of India. Price 1½*a*.

Rules for the transport and importation of explosives at the Port of Calcutta. Price 4*a*.

GOVERNMENT PUBLICATIONS FOR SALE

BY THE SUPERINTENDENT OF GOVERNMENT PRINTING, INDIA, 8 HASTINGS STREET, CALCUTTA.

[A General Catalogue of all Government Publications may be obtained gratis from the Government Central Press, Calcutta.]

All books published by the Superintendent of Government Printing, India, can be purchased, either directly or through the following or any other booksellers:—

AGENTS IN INDIA.

Messrs. Thacker, Spink & Co., Calcutta and Simla.
Messrs. Newman & Co., Calcutta.
Messrs. Higginbotham & Co., Madras.
Messrs. Thacker & Co., Ld., Bombay.
Messrs. A. J. Combridge & Co, Bombay.
Messrs. V. Kalyanarama Iyer & Co., Madras.
Messrs. D. B. Taraporevala, Sons & Co. Bombay
Superintendent, American Baptist Mission Press, Rangoon.
Rai Sahib M. Gulab Singh and Sons, Mufid-I-Am Press, Lahore.
Manager, Educational Book Depots, Nagpur and Jubbulpore.*
Manager of the Imperial Book Depot, 63 Chandni Chauk Street, Delhi.*
Manager, 'East Coast News," Vizagapatam.*
Manager, "The Agra Medical Hall and Co-operative Association, Limited" (Successors to A. John & Co.), Agra.*
Mr. T. K. Sectharama Aiyar, Kumbakonam.*
Lala Debi Prasad, Vakil and Manager of Law Press, Cawnpore.*

AGENTS IN EUROPE.

Mr. E. A. Arnold, 37 Bedford Street, Strand, London.
Messrs. Constable & Co., 2 Whitehall Gardens, London.
Messrs. Sampson Low, Marston & Co., St. Dunstan's House, Fetter Lane, London.
Messrs. Luzac & Co., 46 Great Russel Street, London.
Messrs. Kegan Paul, Trench, Trübner & Co., Charing Cross Road, London.
Mr. B Alfred Quaritch, 15 Piccadilly, London.
Messrs P. S. King and Son, 2 & 4 Great Smith Street, Westminster.
Messrs. H. S. King & Co., 65 Cornhill, London, are also Agents for the sale of the Indian Army List.
Mr. Otto Harrassowitz } Leipzig.
Mr. Karl Hiersemann }
Messrs. R. Friedlander & Sohn, Berlin, N. W Carlstrasse, 11.
Mr. Ernest Leroux, 28 Rue Bonaparte, Paris.
Mr. Martinus Nijhoff, the Hague, Holland.
Messrs. Williams and Norgate, Oxford.
Messrs. Deighton Bell & Co., Cambridge.

* Agents for sale of the Legislative Department publications.

NOTICE.—Books and Acts required for private use only can be purchased. Applications should be accompanied by a remittance, unless it is wished that the books should be sent by value-payable post, in which case, besides the ordinary postage, an additional charge is made for registration and commission.

Books and Acts required for the public service should be obtained through Local Governments to whom the applicant is subordinate.

Applications for Government publications which are no longer in print should be made to the Agents of the particular Government under whose orders they were originally issued.

The amounts within parentheses are for packing and postage

List of New Books published during the Current Quarter.

LEGISLATIVE DEPARTMENT.

List of General rules and orders under Statutes and General Acts in force in British India, Corrected to 31st March 1902. Royal 8vo. Stitched. Re. 1 8*a.* or 2*s.* 3*d.* (3*a.*)

HOME DEPARTMENT.

Report on the Nature of Kala-Azar, by Major Ronald Ross, I.M.S. F'cap. Board. Rs. 2 or 3*s.* (3*a.*)

FINANCE AND COMMERCE DEPARTMENT.

List of Officers in the Finance and Commerce Department. Corrected to 1st May 1902. Royal 8vo. Paper cover. 4*a.* or 5*d.* (1*a.*)

Statistics compiled from the Finance and Revenue Accounts of the Government of India. Receipts and Disbursements of Home and Indian Accounts from 1st April 1892 to 31st March 1900. F'cap. Board. Rs. 2 or 3*s.* (7*a.*)

STATISTICAL DEPARTMENT.

Review of the Trade of India in 1901-1902. F'cap. Paper cover. 8*a.* or 9*d.* (2*a.*)

Statistics of Cotton Spinning and Weaving in the Indian Mills in April 1902, and in the corresponding month of 1900 and 1901. Royal 8vo. Stitched. 2*a.* or 2*d.* (1*a.*)

Accounts of the External Land Trade of British India for the month of April 1902. Royal 8vo. Stitched. 8*a.* or 9*d.* (2*a.*)

Trade and Navigation Accounts of British India for the month of June 1902. No. 3. Royal 8vo. Stitched. 8*a.* or 9*d.* (2*a.*)

Area and yield of certain crops from 1891-1892 to 1901-1902. F'cap. Paper cover. 5*a.* or 6*d.* (3*a.*)

Accounts relating to the Trade carried by Rail and River in India in the quarter and in the twelve months ending March 1902, compared with the corresponding periods of the years 1900 and 1901. No. 4 of 1901-1902. F'cap. Paper cover. 8*a.* or 9*d.* (2*a.*)

MILITARY DEPARTMENT.

List of Light-houses and Light-vessels in British India, including those in the Gulf of Aden existing at the end of 1901. 21st Issue. Royal 8vo. Board. Re. 1 or 1*s.* 6*d.* (2*a.*)

The Quarterly Indian Army List for July 1902. Royal 8vo. Paper cover. Rs. 3 or 4*s.* 6*d.* (2*a.*)

OLDER PUBLICATIONS.

A General Catalogue of all Government Publications (corrected up to 31st December, 1901) may be obtained *gratis* on application to the Officer in charge, Bengal Secretariat Book Depôt.

Publications for sale at the office of the Chief Inspector of Explosives with the Government of India.

Rules for the manufacture, possession and sale of explosives issued by each of the Local Governments and Administrations. Price 12*a*.

Rules for the transport and importation of explosives issued by the Government of India. Price 12*a*.

Rules for the transport and importation of explosives at the Port of Calcutta. Price 4*a*.

GOVERNMENT PUBLICATIONS FOR SALE

BY THE SUPERINTENDENT OF GOVERNMENT PRINTING, INDIA, 8 HASTINGS STREET, CALCUTTA.

[A General Catalogue of all Government Publications may be obtained gratis from the Government Central Press, Calcutta.]

All books published by the Superintendent of Government Printing, India, can be purchased, either directly or through the following or any other booksellers:—

AGENTS IN INDIA.

Messrs. Thacker, Spink & Co., Calcutta and Simla.
Messrs. Newman & Co., Calcutta.
Messrs. Higginbotham & Co., Madras.
Messrs. Thacker & Co., Ld., Bombay.
Messrs. A. J. Combridge & Co., Bombay.
Messrs. V. Kalyanarama Iyer & Co., Madras.
Messrs. D. B. Taraporevala, Sons & Co., Bombay
Superintendent, American Baptist Mission Press, Rangoon.
Rai Sahib M. Gulab Singh and Sons, Mufid-I-Am Press, Lahore.
Manager, Educational Book Depots, Nagpur and Jubbulpore.*
Manager of the Imperial Book Depot, 63 Chandni Chauk Street, Delhi.*
Manager, 'East Coast News," Vizagapatam.*
Manager, "The Agra Medical Hall and Co-operative Association, Limited" (Successors to A. John & Co.), Agra.*
Mr. T. K. Sectharama Aiyar, Kumbakonam.*
Lala Debi Prasad, Vakil and Manager of Law Press, Cawnpore.*

AGENTS IN EUROPE.

Mr. E. A. Arnold, 37 Bedford Street, Strand, London.
Messrs. Constable & Co., 2 Whitehall Gardens, London.
Messrs. Sampson Low, Marston & Co., St. Dunstan's House, Fetter Lane, London.
Messrs. Luzac & Co., 46 Great Russel Street, London.
Messrs. Kegan Paul, Trench, Trübner & Co., Charing Cross Road, London.
Mr. B. Alfred Quaritch, 15 Piccadilly, London.
Messrs. P. S. King and Son, 2 & 4 Great Smith Street, Westminster.
Messrs. H. S. King & Co., 65 Cornhill, London, are also Agents for the sale of the Indian Army List.
Mr. Otto Harrassowitz, Mr. Karl Hiersemann } Leipzig.
Messrs. R. Friedlander & Sohn, Berlin, N. W Carlstrasse, 11.
Mr. Ernest Leroux, 28 Rue Bonaparte, Paris.
Mr. Martinus Nijhoff, the Hague, Holland.
Messrs. Williams and Norgate, Oxford.
Messrs. Deighton Bell & Co., Cambridge.

* Agents for sale of the Legislative Department publications.

NOTICE.—Books and Acts required for private use only can be purchased. Applications should be accompanied by a remittance, unless it is wished that the books should be sent by value-payable post, in which case, besides the ordinary postage, an additional charge is made for registration and commission.

Books and Acts required for the public service should be obtained through Local Governments to whom the applicant is subordinate.

Applications for Government publications which are no longer in print should be made to the Agents of the particular Government under whose orders they were originally issued.

The amounts within parentheses are for packing and postage

List of New Books published during the Current Quarter.

LEGISLATIVE DEPARTMENT.

List of General rules and orders under Statutes and General Acts in force in British India. Corrected to 31st March 1902. Royal 8vo. Stitched. Re. 1 8*a*. or 2*s*. 3*d*. (3*a*.)

HOME DEPARTMENT.

Report on the Nature of Kala-Azar, by Major Ronald Ross, I.M.S. F'cap. Board. Rs. 2 or 3*s*. (3*a*.)

FINANCE AND COMMERCE DEPARTMENT.

List of Officers in the Finance and Commerce Department. Corrected to 1st May 1902. Royal 8vo. Paper cover. 4*a*. or 5*d*. (1*a*.)

Statistics compiled from the Finance and Revenue Accounts of the Government of India. Receipts and Disbursements of Home and Indian Accounts from 1st April 1892 to 31st March 1900. F'cap. Board. Re. 2 or 3*s*. (7*a*.)

STATISTICAL DEPARTMENT.

Review of the Trade of India in 1901-1902. F'cap. Paper cover. 8*a*. or 9*d*. (2*a*.)

Statistics of Cotton Spinning and Weaving in the Indian Mills in April 1902, and in the corresponding month of 1900 and 1901. Royal 8vo. Stitched. 2*a*. or 2*d*. (1*a*.)

Accounts of the External Land Trade of British India for the month of April 1902. Royal 8vo. Stitched. 8*a*. or 9*d*. (2*a*.)

Trade and Navigation Accounts of British India for the month of June 1902. No. 3. Royal 8vo. Stitched. 8*a*. or 9*d*. (2*a*.)

Area and yield of certain crops from 1891-1892 to 1901-1902. F'cap. Paper cover. 5*a*. or 6*d*. (3*a*.)

Accounts relating to the Trade carried by Rail and River in India in the quarter and in the twelve months ending March 1902, compared with the corresponding periods of the years 1900 and 1901. No. 4 of 1901-1902. F'cap. Paper cover. 8*a*. or 9*d*. (2*a*.)

MILITARY DEPARTMENT.

List of Light-houses and Light-vessels in British India, including those in the Gulf of Aden as existing at the end of 1901. 21st Issue. Royal 8vo. Board. Re. 1 or 1*s*. 6*d*. (2*a*.)

The Quarterly Indian Army List for July 1902. Royal 8vo. Paper cover. Rs. 3 or 4*s*. 6*d*. (2*a*.)

Military Works Services Classified List and Distribution Return. Corrected up to 30th June 1902. Royal 8vo. Paper cover 4a. or 5d. (1a.)

General List of Vouchers required to support Credits and Charges in Supply and Transport Cash and Store Accounts. India. Royal 8vo. Paper cover. 10a. or 1s. (3a.)

PUBLIC WORKS DEPARTMENT.

Administration Report on the Railways in India for the calendar year 1901. F'cap. Paper cover. Rs. 2 or 2s. 8d. (8a.)

Public Works Department Classified List and Distribution Return of Establishment. Corrected to 30th June 1902 Super Royal 8vo. Paper cover. Rs. 2 or 3s. (4a.)

Classified List of the Subordinate Establishment. Corrected to 30th June 1902. Super Royal 8vo. Paper cover. 4a. or 5d (1a.)

REVENUE AND AGRICULTURE DEPARTMENT.

Technical Art Series for 1901. Together with their explanatory text and cover. Nos. I to XII. 4a. or 5d. (3a.) per plate.

List of Books published from January to June 1902.

LEGISLATIVE DEPARTMENT.

Chronological Tables of the Indian Statutes compiled, under the orders of the Government of India, by F. G. Wigley, Esq. Royal 8vo. Cloth. *Rs.* 4 or 6s. (7a.)

The Indian Penal Code (Act XLV of 1860), as modified up to the 1st July 1899, and with foot-notes brought down to 1st April 1901. *Rs.* 2-8 or 3s. 9d. (6a.)

The Indian Factories Act, 1881, as modified up to the 1st April 1891 (with foot-notes brought down to 1st July 1901). 5a. 6p. or 6d. (1a. 6p.)

Effect of Legislation for 1898, 1899, and 1900. *Re.* 1 or 1s. 6d. (2a.)

Chronological Tables of the Indian Statutes, 1901. *Re.* 1 or 1s. 6d. (2a.)

A Digest of Indian Law Cases, Vol. III. Cloth bound. *Rs* 12 or 18s. (10a.)

Ditto ditto ditto. Quarter bound. *Rs.* 13 or 19s. 6d. (10a.)

Act IX of 1901. An Act further to amend the Indian Articles of War. 1a. or 1d. (1a.)

Act X of 1901. An Act further to amend the Court-fees Act, 1870. 1s 8p or 1d. (1a.)

Act XI of 1901. An Act to facilitate the citation of certain Enactments and to amend and repeal certain obsolete Enactments.

Regulation III of 1901. A Regulation further to provide for the suppression of crime in certain frontier districts. 7a. 6p. or 9d. (1a. 6p.)

Regulation IV of 1901. A Regulation to make better provision for the suppression of murderous outrages in certain frontier tracts. 2a. 6p. (1a.)

Regulation V of 1901. A Regulation further to amend the Upper Burma Land and Revenue Regulation, 1899 1a. 9p. or 2d. (1a.)

Regulation VI of 1901. A Regulation to repeal so much as is unrepealed of the Punjab Frontier Regulation, 1872, and of the Hazara Settlement Rules, 1a. or 1d (1a.)

Regulation VII of 1901. A Regulation to alter certain of the laws in force in the North-West Frontier Province, to declare that certain Enactments are in force therein, and to bar the application of certain others hereto. 11a. or 1s. 3d. (2a.)

Corrigendum slip for Act XIII of 1900. 1a.

Title-page and Contents to Acts of 1901. 1a. 6p (1a.)

Index to Acts of 1901. 2a. 9p. or 3d (1a.)

The European Vagrancy Act, 1874 (IX of 1874), as modified up to 1st December, 1901. 6a. 6p. or 7d. (1a.)

The Chaukidars Act, 1856 (XX of 1856), as modified up to 1st December, 1901. 7a. 6p. or 8d. (1a.)

The Registration of Ships Act, 1841 and 1850 (X of 1841 and XI of 1850), as modified up to 1st December 1893, and with foot-notes brought down to 1st December, 1901. 7a. or 7d. (1a.)

Table showing the effect of Legislation in the Governor-General's Council during 1901. 6a. or 6d. (1a.)

LIST OF TRANSLATIONS AND TRANSLITERATIONS OF ACTS PUBLISHED FROM 1ST OCTOBER 1901 TO 31ST MARCH 1902.

The Cattle-trespass Act, 1871 (I of 1871), as modified up to the 1st April 1901. In Urdu. 2a. (1a.)

Ditto. In Hindi. 2a. (1a.)

Act IX of 1901 (an Act further to amend the Indian Articles of War). In Urdu. 3p. (1a.)

Ditto. In Hindi. 3p. 1a.

Act X of 1901 (an Act further to amend the Court-fees Act, 1870). In Urdu. 3p. (1a.)

Ditto. In Hindi. 3p. (1a.)

HOME DEPARTMENT.

Chronological Tables for 1902, embodying Notifications by the Government of Bengal and Government of India prescribing holidays during the year with corresponding dates in English, Bengali, Velati, Fusli, etc. Royal 8vo. Paper cover. 4a. or 4d. (1a.)

Annual Report of the Sanitary Commissioner with the Government of India, 1900, with Appendices and Returns of Sickness and Mortality among European Troops, Native Troops, and Prisoners in India, for the year. F'cap. Boards. *Rs.* 3 or 4s. 6d. (8a.)

Report of Proceedings of the Central Indigenous Drugs Committee of India, Volume I. Royal 8vo. Board. Rs. 3-8 or 5s. 3d (7a.)

List of Europeans and others in the English Factories in Bengal at the time of the Siege of Calcutta in the year 1756, with an appendix containing lists of European Sufferers By S. Charles Hill, Esq., B.A., B SC. Super-Royal 4to. Paper cover. Rs 2 or 3s. (3a.)

Judicial and Administrative Statistics for British India. 6th issue, 1900 1901, and preceding years. F'cap. Board Rs. 2 or 3s. (10a.)

The Countess of Dufferin's Fund Seventeenth Annual Report of the National Association for Supplying Female Medical Aid to the Women of India for the year 1901. Super-Royal 8vo. Re. 1 or 1s. 4d. (3a.)

DEPARTMENT OF REVENUE AND AGRICULTURE.

List of Officers in the Survey and other Scientific and Minor Departments subordinate to the Government of India in the Department of Revenue and Agriculture, corrected to 1st July 1901. Royal 8vo. Paper cover. 8a. or 9d. (2a.)

Report of the Committee on the Establishment of Co-operative Credit Societies in India. F'cap Paper cover. 4a. or 5d. (2a.)

Forest Flora of the School Circle, North-Western Provinces, being a descriptive list of the indigenous woody plants of the Shaharanpur and Dehra Dun districts and the adjoining portions of the Tehri-Garhwal State in the North-Western Provinces, with Analyses. Double Crown. 16mo. Full cloth. Re. 1-8 or 2s. (3a.)

Archæological Exploration in Chinese Turkestan. By Dr. M. A. Stein. Royal 4to. Cloth. Rs. 4 or 6s (4a.)

Land Revenue Policy of the Indian Government. Royal 8vo. Cloth. 10a. or 1s. (4a.)

FOREIGN DEPARTMENT.

Report on the Administration of the Baluchistan Agency for 1900-1901. Re. 1-8 or 2s. 3d. (3a.)

Report on the Administration of the Hyderabad Assigned Districts for the year 1900-1901. F'cap. Limp cover. Rs. 3-12 or 5s. 6d. (6a.)

Report on the Political Administration of the territories within the Central India Agency for 1900-1901. F'cap. Limp cover. *Re.* 1-8 or 2s. (3a.)

Annotated Returns of the Dispensaries in Central India for 1900. F'cap. Limp cover. *Re.* 1-8 or 2s. (3a.)

Report on the Administration of the Civil and Military Station of Bangalore for the year 1900-1901. F'cap. Board. 8*a.* or 9*d.* (2*a.*)

Grammar and Vocabulary of Waziri Pashto. By J. G. Lorimer, Esq., I.C.S. Royal 8vo. Board. Rs. 3 or 4*s.* 6*d.* (5*a.*)

FINANCE AND COMMERCE DEPARTMENT.

List of Officers in the Finance and Commerce Department. Corrected to December 1901; to April 1902. 4*a* or 5*d.* (1*a.*) each.

Papers relating to the proposed Establishment of a Central Bank in India. F'cap. Board. Re. 1 or 1*s.* 6*d.* (4*a.*)

Administration Report of the Mint at Bombay and Calcutta for 1900-1901. F'cap. Paper cover. Re. 1 or 1*s.* 6*d.* (2*a.*)

Schedule IV of the Indian Tariff Act (VIII of 1878) of 1902. Royal 8vo. Stitched. 6*a.* or 6*d.* (1*a.*)

STATISTICAL DEPARTMENT.

Trade and Navigation Accounts of British India for the months of December 1901 to May 1902. Royal 8vo. Stitched. 8*a.* or 9*d.* (2*a.*) each.

Accounts of the External Land Trade of British India for the months of September 1901 to March 1902. Royal 8vo. Stitched. 8*a.* or 9*d* (2*a.*) each.

Accounts relating to the Trade carried by Rail and River in India in the quarter ending September 1901. Compared with the corresponding periods of the years 1899 and 1900. No. 2 of 1901-1902. F'cap. Paper cover. 8*a.* or 9*d.* (2*a.*)

Ditto ditto ending December 1901. Compared with the corresponding periods of the years 1899 and 1900. No. 3 of 1901-1902. F'cap. Paper cover. 8*a.* or 9*d.* (2*a.*)

Accounts of the Trade of the French Possessions in India in the year ending 31st March 1901, and the four preceding years. F'cap. Paper cover. 2*a* or 3*d.* (1*a.*)

Statistics of Cotton Spinning and Weaving in the Indian Mills in January, February, and March 1902; in the ten months, April 1901 to January 1902; in the eleven months, April 1901 to February 1902, and in the twelve months, April 1901 to March 1902. Compared with the corresponding period of 1899-1900 and 1900-1901. Royal 8vo. Stitched. 2*a.* or 2*d.* (1*a.*) each.

Accounts of the Trade of Aden in the year ending 31st March 1901, and the four preceding years. F'cap. Paper cover. 10*a.* or 1*s.* (2*a.*)

Accounts of the Trade of the Portuguese Possessions in India in the year 1899-1900 and the four preceding years. F'cap. Paper cover. 2*a.* 3*d.* (1*a.*)

Prices and Wages in India. Nineteenth issue, 1902. Super-Royal 4to. Board. Re. 1-8 or 2*s* (9*a.*)

COMPTROLLER-GENERAL.

Finance and Revenue Accounts of the Government of India for 1900-1901. F'cap Board. Re. 2 or 3*s.* (8*a.*)

Appropriation Report on the Accounts of the Government of India for 1900-1901. By A. F. Cox, Esq. F'cap. Board. 8*a.* (5*a*).

MILITARY DEPARTMENT.

The Monthly Indian Army List for February to March, May, June 1902. Royal 8vo. Paper cover. Re 1-8 or 2*s.* 3*d.* (4*a.*) each.

Return of Wrecks and Casualties in Indian Waters for the year 1900. F'cap. Stiff cover. 12*a.* or 1*s.* (3*a.*)

Military Works Services Classified List and Distribution Return. Corrected up to 31st December 1901. Royal 8vo. Paper cover. 4*a.* or 5*d.* (1*a.*)

Indian Military Budget Estimate for the year 1902-1903. F'cap. Board. Re. 1-8 or 2*s.* 3*d.* (8*a.*)

PUBLIC WORKS DEPARTMENT.

Public Works Department Classified List and Distribution Return of Establishment. Corrected up to 31st December 1901. Super-Royal 8vo. Paper cover. Rs. 2 or 3*s.* (4*a.*)

Classified List (Public Works Department), Subordinate Establishment. Corrected up to 31st December 1901. Super-Royal 8vo. Paper cover. 4*a.* or 4*d.* (1*a.*)

Budget Estimate of the Indo-European Telegraph Department for the year 1902-1903. F'cap. Paper cover. 8*a.* or 9*d.* (1*a.* 6*p.*)

Budget Estimate of the Indian Telegraph Department for the year 1902-1903. F'cap. Paper cover. 8*a.* or 9*d.* (1*a.* 6*p.*)

History of Services of the Officers of the Engineer, Accounts, and State Railway Revenue Establishments. Corrected to 31st December 1901. In two Volumes. Royal 8vo. Board. Vol. I, Rs. 2-8 or 3*s.* 9*d.* (6*a.*). Vol. II Rs. 2-8 or 3*s.* 9*d.* (6*a.*) Complete, Rs. 5 or 7*s.* 6*d.* (9*a.*)

List of new books for sale at the Thomason College, Roorkee, which were not advertised before.

Roorkee Treatise on "Railways," 4th Edition, revised by F. Wolley Dod, M.C.E. Price, Rs. 3 per copy.

Roorkee Treatise on "Irrigation Works." By Lieutenant-Colonel J. Clibborn, I.S.C., B.A., L.C.E., C.I.E. Price Rs. 9 per copy.

Roorkee Treatise on "Sanitary Engineering." Compiled by Lieutenant-Colonel J. Clibborn, I.S.C., B.A., L.C.E., C.I.E. Price, Rs. 4-8 per copy.

Roorkee Manual of "Applied Mechanics," Volume II. The stability of structures mostly by graphic methods, by Lieutenant-Colonel J. H. C. Harrison, R.E. Price, Rs. 8-2 per copy.

Roorkee Manual of Hydraulics. Price per copy, Re. 1-4. (No. XIX, Elementary Treatise). By E. F. Tipple, Esq., B.A.

Designs for Wooden Bridges, together with rules for calculating the area of waterway, &c., and Plates. By late Rai Bahadur Kunhya Lal. Price per set, Rs. 4-2

Pamphlet on Examination for Acid Radicals: Tables giving Analysis of Acids. Price per copy, 8*a.*

Pamphlet on Examination for Acid Bases: Tables giving Analysis of Metallic Bases. Price, 8*a.* per copy.

Pamphlet on Note on Masonry Arches (College publication). Price, 4*a.* per copy.

Pamphlet on Small Direct Well Pumping Installations. Price, 4*a.* per copy.

Pamphlet on Experiments made on the passage of water through the sand of the Chenab River at the Khanki Weir. By Lieutenant-Colonel J. Clibborn, I.S.C., C.A., L.C.E., C.I.E. Price per copy, 12*a.*

Indian Household Account Book for a period of two years, comprising Daily Table Expense Account, Bread, Butter and Milk Account, Dhobey's Account, Servants' Wages Account, etc. Price, Rs. 3 per copy.

Cash must accompany order. Articles are sent by V.-P. P. to persons in Government employment only.

Application is to be made to the Curator, Thomason College Book Depôt, Roorkee.

Half-yearly list of new books and periodicals for sale at the Library of the Asiatic Society of Bengal, 57 Park Street, Calcutta.

ASIATIC SOCIETY'S PUBLICATIONS.

Proceedings Nos. 9 to 11 of 1901 and No. 1 of 1902, at 8*a*.
Journal, Part I, No. 2 of 1901, at Re. 2.
" Part II, No. 2 of 1901, at Re. 2.
" Part III, No. 2 of 1901, and Part III, No. 1 of 1902, at Rs. 2.

BIBLIOTHECA INDICA.

Upamitibhavaprapancha Katha. Fasc. 4 at 6*a*.
Catapatha Brahmana. Vol. I, Fasc. 5, at 6*a*.
Varsakriya Kaumudi. Fasc. 3 and 4, at 6*a*.
Nityacarapaddhati. Fasc. 2 and 3, at 6*a*.
Apastamba Sranta Sutra. Vol. III, Fasc. 16, at 6*a*.
Mahabhasyaprodipodyata. Vol. II, Fasc. 2 and 3, at 6*a*
Al-Muquddasai. (English.) Vol. I, Fasc. 2, at 12*a*.

List of Books published by the Meteorological Department during the current quarter.

Monthly Weather Review of India for the month of February 1902. By John Eliot and Lala Hem Raj (illustrated by 5 plates). Quarto. Paper cover. Re. 1.
Indian Meteorological Memoirs, Volume XII, Part III. By John Eliot (illustrated by 68 plates) Quarto. Paper cover. Rs. 3.
Indian Meteorological Memoirs, Volume XII, Part IV. By W. L. Dallas, Quarto. Paper cover. Rs. 3.

List of books published by Meteorological Department from 1st January to 30th June, 1902.

Monthly Weather Review of India, from September, 1901, to January, 1902. By W. L. Dallas (illustrated by five plates). Quarto. Paper cover. Re. 1 per month.
Report of the Director, Government Observatory, Bombay, for the year ending 31st December, 1901. By N. A. F. Moos, Quarto. Paper cover.
Report on the Kodaikanal and Madras Observatories for the period 1st April to 31st December, 1901. By C. Michie Smith. Quarto. Paper cover.
Indian Meteorological Memoirs, Volume XII, Part II. By John Eliot. Quarto. Paper cover. Rs. 3.
Indian Meteorological Memoirs, Volume XIII. By John Eliot. Quarto. Paper cover Rs 5.

The Indian Law Reports.

Published under Authority.

THE Indian Law Reports, published under the authority of the Governor-General in Council, appear in monthly parts, published as soon as possible after the first of each month at Calcutta, Madras, Bombay, and Allahabad, and comprise four series—one for the Calcutta High Court, a second for the Madras High Court, a third for the Bombay High Court, and a fourth for the Allahabad High Court. The cases heard by the Privy Council on appeal from each High Court are reported in the Series for that High Court. Cases heard by the Privy Council on appeal from Provinces in India not subject to any High Court are reported in the Calcutta Series.

The Calcutta Series is distributed by the Bengal Secretariat Book Depôt, and the Madras, Bombay, and Allahabad Series are distributed direct from Madras, Bombay, and Allahabad respectively.

In supersession of the previous advertisements, on and from the 1st January 1889 the terms of subscription and sale will be as follows for current issues as well as for back numbers of the reports from 1876:—

Terms of subscription, payable annually in advance.

For the complete series, *including postage* (Inland rate) Rs. 22-8.

Ditto, ditto (Overland rate) Rs. 28.

	Without postage.	With postage.
	Rs. A. P.	Rs. A. P.
For the Calcutta Series	10 0 0	12 8 0
„ each of the Madras, Bombay, and Allahabad Series	6 0 0	7 0 0
„ a part of the Calcutta Series purchased separately (*inclusive of postage in India*)	.....	2 0 0
„ a part of each of the Madras, Bombay, and Allahabad Series purchased separately (*inclusive of postage in India*)	.....	1 0 0

The following are the rates at which deductions will be made for parts out of print and at which duplicate copies will be supplied to subscribers when required in place of copies lost in transit, provided complaint of non-receipt is made to the Publisher within three months of the date of publication:—

	For town.	For mufassal.
	Rs. A. P.	Rs. A. P.
For the Calcutta Series, per copy ...	0 8 9	0 10 3
„ each of the Madras, Bombay, and Allahabad Series, per copy ..	0 5 3	0 5 9
„ the Calcutta Series, for the year	7 2 6	8 6 3
„ each of the Madras, Bombay and Allahabad Series, for the year	4 4 6	4 11 3

Persons desiring to subscribe for or purchase the Report should apply to—

The Superintendent, Government Press, Madras.

„ Superintendent, Government Central Press, Bombay.

„ Curator of Government Books, United Provinces of Agra and Oudh, Allahabad.

„ Officer in charge, Bengal Secretariat Book Depôt, Calcutta.

Orders and subscriptions for 1902 should be at once registered and remitted by money-order payable to the Treasurer, Bengal Secretariat, Calcutta.

ADVERTISEMENTS will be received for publication on the wrappers of the Indian Law Reports, Calcutta Series, at the following rates, payable in advance—

	One page.	Half page.	Quarter page.
	Rs.	Rs.	Rs.
For one issue ...	20	14	9
„ three issues ...	55	36	24
„ six „ ...	100	68	45
„ nine „ ...	145	96	64
„ twelve „ ...	180	120	80

SEVERAL volumes of the BENGAL LAW REPORTS, from August 1868 to December 1875, and FULL BENCH RULINGS, Parts I and II, are available at the following rates:—

	Without postage.	With postage.
	Rs. A. P.	Rs. A. P.
Bengal Law Reports, for one year ...	20 0 0	22 8 0
Single copies, Rs. 2 per copy.		
Full Bench Rulings, Parts I and II ...	20 0 0	22 8 0

Obtainable at the Bengal Secretariat Book Depôt, Writers' Buildings, Calcutta.

Remittances to be forwarded to the Treasurer, Bengal Secretariat, Writers' Buildings, Calcutta.

The complete series of the INDIAN LAW REPORTS for the years 1876 to 1885, and 1890 to 1892, 1894, 1896 to 1901 having now been reprinted, are available, and may be purchased for all the years, or any particular year, on application to the Officer in charge, Bengal Secretariat Book Depôt.

The wanting parts of the Reports for the remaining years are being reprinted, and complete Reports from the beginning to date will be available shortly.

NOTICE TO SUBSCRIBERS.

SUBSCRIBERS are hereby informed that, unless complaint of non-receipt of any number is made to the Publisher of the series within three months of the date of publication, the benefits of the subscription rates for copies lost in transit will not be allowed, and full rates will be charged. The price per copy of each of the four series at subscription rates and at full rates is shown below:—

	Per copy. Subscription rate.					
	Town.			Mofussal.		
	Rs.	A.	P.	Rs.	A.	P.
Calcutta Series	0	8	9	0	10	3
Each of the Madras, Bombay, and Allahabad Series ...	0	5	3	0	5	9

	Full rate.					
	Town.			Mofussal.		
	Rs.	A.	P.	Rs.	A.	P.
Calcutta Series	2	0	0	2	0	0
Each of the Madras, Bombay, and Allahabad Series ...	1	0	0	1	0	0

Notice.

THE *CALCUTTA GAZETTE*.

The 1st March 1901.—From this date the subscription to, and postage for, the *Calcutta Gazette* will be at the following rates, payable in advance:—

PER ANNUM.	For Calcutta.	For the Mufassal, including postage.
	Rs. A.	Rs. A.
Entire *Gazette*	15 0	20 0
Parts I, Ia and Ib together ...	5 0	7 8
Part II	1 0	2 12
Parts III, IV and IVA together	4 0	6 0
„ V and VI together ..	2 0	3 0
Appendix (Marine Notifications)	1 0	2 12
Supplement	5 0	7 8
PER ISSUE.		
Entire *Gazette*	0 8	0 10
Supplement	0 4	0 5

N. B.—Separate Parts of each issue of the *Gazette*, and occasionally important Rules and Extracts, can be obtained from the Officer in charge, Bengal Secretariat Book Depôt, at the rate of one anna for every sixteen pages or a fraction thereof. Postage according to weight.

RATES FOR ADVERTISEMENTS in the *Calcutta Gazette*:—

Full Page, per issue	Rs. 20
Half „ „ „	„ 10

Casual advertisements, 4 annas per line.

Annual Statement of the Sea-borne Trade and Navigation of the Bengal Presidency and of its Chief Port (Calcutta), and each of its Subordinate Ports—Chittagong, Balasore, Cuttack, Pooree, and Naraingunge, Volumes I and II. Price Rs. 20 for 1899-1900. Published at the Calcutta Custom House. Previous years' volumes can also be obtained at the same price.

The Calcutta Gazette.

WEDNESDAY, AUGUST 20, 1902.

PART IV.

Bill of the Bengal Council.

GOVERNMENT OF BENGAL.

LEGISLATIVE DEPARTMENT.

THE following Revised Report of the Select Committee appointed to consider the Bill to amend the Bengal Drainage Act, 1880, together with the Bill as further amended by them, is published for general information:—

REVISED REPORT OF THE SELECT COMMITTEE ON THE BILL TO AMEND THE BENGAL DRAINAGE ACT, 1880.

WE, the undersigned, Members of the Select Committee appointed to consider the Bill to amend the Bengal Drainage Act, 1880, have considered the Bill and the papers noted in the margin, and have the honour to submit this our revised Report, with the Bill as further amended by us annexed hereto.

Letter from Babu Guru Charan Ray Chaudhari, Zamindar, dated Sibpur, the 25th April, 1902. [Paper No. 1.]

Letters Nos. 84T. to 86T. and No. 117D., dated the 10th April, 1902, from the Secretary to the Bengal Council and Assistant Secretary to the Government of Bengal, Legislative Department, to the Secretary to the Board of Revenue, L. P., to the Superintendent and Remembrancer of Legal Affairs; to the President of the British Indian Association, and the Secretary to the Uttarpara People's Association. [Paper No. 2.]

Letter from the Secretary to the British Indian Association, No. 186, dated the 31st May, 1902. [Paper No. 3.]

Letter from the Officiating Secretary to the Board of Revenue, No. 519A., dated the 6th June, 1902 [Paper No. 4.]

Letter from the Superintendent and Remembrancer of Legal Affairs, No. 485, dated the 7th June, 1902. [Paper No. 5.]

Petition from Babu Jyot Kumar Mukerjee, Zamindar of Uttarpara, dated the 3rd July, 1902. [Paper No. 6.]

2. The amendments which we have made in the Bill are, as far as possible, printed in italics, and all which are of any importance are explained in the following paragraphs.

3. *Clause 2.*—This clause is new. It inserts in the Act a definition of the expression "Certificate Officer," which is used in the new section 51C.

4. *Clauses 3, 4, 5, 7 and 13.*—These clauses are also new. They give effect to a recent decision of the Government to reduce the interest on advances for drainage works from five *per cent.* compound to four *per cent.* simple interest; and, as the Bill now stands, the interest chargeable by landholders to tenants, and by superior tenants to sub-tenants, on payments made by landholders and superior tenants, respectively, will be subject to a similar reduction.

5. *Clause 6 (section 36A).*—We have, in accordance with a suggestion made by the Superintendent and Remembrancer of Legal Affairs, in Paper No. 5, added the words "or for any other substantial reason" in *section 36A (1).*

In consequence of this addition, we have altered the opening words of the section so as to make it clear that an order passed under section 36 may be revised only so far as it declares what persons are liable to pay drainage dues.

In sub-clause (*b*) we have struck out the words "by transfer or succession," so as to admit of an order being revised whenever a change of ownership has taken place under any circumstances.

We have added words to enable the Collector, when revising an order, to impose conditions, in reference, for example, to the discharge of past liabilities.

We have added a proviso to the effect that every person who is materially affected by any addition or alteration made by the Collector must have an opportunity of being heard before the order of revision is made. This addition meets suggestions made by the Commissioner of Bhagalpur, the Board of Revenue and the Legal Remembrancer.

6. *Clause 8 (section 41A).*—We have provided specifically in sub-clause (*i*) that, when a co-sharer elects to proceed by suit, contributions towards a payment made by him may be recovered in the manner in which arrears of rent are recoverable under the Bengal Tenancy Act, 1885. This clause is based on section 48 of the Cess Act, 1880.

7. *Clause 9 (sections 44A and 44B).*—In sub-section (*1*) of *section 44A* we have provided that an application for the recovery of drainage dues under the certificate procedure may be made by a landlord if he has not enhanced the rent of his tenants. This takes the place of the provision made in the Bill as introduced in Council that such an application might be made if the landlord had not recovered his dues by an enhancement of rents.

We have inserted a new sub-section to make it clear that when the name of any person has been removed, under the new section 36A, from the list of landholders liable to pay drainage charges, such removal will not prevent his recovering under the certificate procedure the dues to which he was entitled as a landholder.

We have also revised the concluding sub-section of *section 44A*, so as to declare tenants in possession to be liable for drainage charges.

Section 44B is new. Its object is to explain that drainage charges cannot be recovered from tenants in cases in which rent has, in consequence of the drainage works, been increased or for the first time imposed.

8. *Clause 11.*—We have added a sub-section in order to reduce from five to four per cent. the interest payable to a landholder when a refund is made to him under section 48 (*3*) of the Act. As the interest on advances is being reduced from five to four per cent., it is but right that the interest on refunds should be similarly reduced.

9. *Clause 12 (sections 51B and 51C).*—*Sections 51B and 51C* embody in a more convenient form the provisions of section 41B, sub-sections (*3*) to (*6*) of section 45A, and sub-sections (*2*) to (*5*) of section 51A of the Bill as introduced.

The following amendments have been made in *section 51B*:—

(*1*) The period within which applications to the Collector for the benefit of the certificate procedure must be made has been extended from sixty days to six months; the period to begin to run, in the case of a payment by a co-sharer, from the date of the payment, and, in the case of sums recoverable from tenants, from the dates on which such sums respectively become due.

(*2*) We have required that applications in respect of sums recoverable from tenants shall specify the date on which the landholder's payment was made and the date on which the sums became due from the tenants.

(*3*) The clause requiring an applicant to declare that he has not enhanced rent has been made applicable to tenures held free of rent or revenue, because, although a tenure may be held by a tenant free of rent, he may have sublet it to an under tenant at a rent.

(*4*) In clause (*f*), for the words "since the carrying out" of the said scheme or works we have substituted the words "on account of" the said scheme or works.

It has been made clear in *sections 51B and 51C* that, while certificates authorising the recovery of drainage dues under the certificate procedure are to be issued by the Collector, all subsequent proceedings are to be taken by the "Certificate Officer," which expression includes Sub-divisional Officers and specially-appointed officers.

As some apprehension has been felt that the Collector may not have time to deal with large numbers of applications for the benefit of the certificate procedure, we may mention that section 56 of the Bengal Drainage Act, 1880, will admit of his delegating this function, with the sanction of the Commissioner, to subordinates, to be exercised subject to his own control and supervision.

We have inserted in sub-section (*3*) of *section 51C* a declaration that the person against whom a certificate is made under this section shall be deemed to be the judgment-debtor for the purposes of the Public Demands Recovery Act.

We have struck out the word "equitably" from sub-section (*4*) of *section 51C*, in deference to objections raised by the British Indian Association. The word appears to be open to misconstruction, and there seems to be no good reason for retaining it.

10. *Clause 12* (*sections 51D to 51J*).—*Sections 51D to 51J* are new. *Section 51D* authorises the Collector to suspend the recovery of drainage dues, both from landholders and from tenants, in respect of any year during which there has been a total or serious failure of crops. *Sections 51E and 51F* contain provisions for the enforcement of orders of suspension, and *section 51G* extends the prescribed period for payment of instalments of drainage dues, when an order of suspension has been made, while *section 51H* similarly extends the period of limitation for the recovery of such dues. *Section 51J* declares that no interest shall accrue during a period of suspension.

11. *Clause 14*.—Two verbal amendments have been made in this clause, with the object of making it more clear that the clause applies to drainage dues which, at the commencement of the new law, have already accrued and are not barred by limitation.

The period within which applications to the Collector for the benefit of the clause must be made has been extended from sixty days to three months.

12. *Clauses 15 to 19*.—These clauses are new. They give effect to the decision of the Government that the reduction of interest, mentioned in paragraph 4 of this Report, shall have retrospective effect in the case of the drainage schemes of Howrah and Rajapur. They also provide for other reductions being made, under the direction of the Local Government, in past charges in respect of those schemes.

Provision has been made, in clauses 17 to 19, for a proportionate reduction in the amounts recoverable from tenants, when the dues of a landholder have been reduced.

13. We recommend that the Bill, as now amended, be passed.

W. C. MACPHERSON.
J. A. BOURDILLON.
B. L. GUPTA.
JOY GOBIND LAW.
R. P. SINGHA.
MANINDRA CHANDRA NANDY.

CALCUTTA;
The 15th August, 1902.

[AS FURTHER AMENDED BY THE SELECT COMMITTEE.]

A

BILL

To amend the Bengal Drainage Act, 1880.

CONTENTS.

SECTION.

1. Short title.

PART I.—*Amendment of the Bengal Drainage Act, 1880.*

2. Amendment of section 3, Bengal Act VI of 1880.
3. Amendment of section 26, and insertion of new section, 26A.
   - 26. Interest to be charged on such advances.
   - 26A. Rate of interest, and barring of compound interest.
4. Amendment of section 28.
5. Repeal of section 29 and portions of sections 30, 31, 38 and 42 to 44.
6. Insertion of new section, 36A.
   - 36A. Power to add to, or alter, declaration as to names of persons liable to pay.
7. Amendment of section 37.
8. Insertion of new Part, IVA.

PART IVA.

RECOVERY OF SHARE OF PAYMENTS FROM CO-SHARERS.

- 41A. Power to recover share of payments from co-sharers.

9. Insertion of new sections, 44A and 44B.
   - 44A. Recovery, under the certificate procedure, of payments made in respect of land held by tenants.
   - 44B. Bar to recovery of money from tenants in certain cases.

10. Amendment of section 45.
11. Amendment of section 48.
12. Insertion of new sections, 51A to 51J.
   - 51A. Recovery, under the certificate procedure, of payments made in respect of land held free of rent or revenue.
   - 51B. Further provisions as to applications under section 41A, 44A or 51A.
   - 51C. Grant of certificate, and effect thereof.
   - 51D. Power of Collector to suspend recovery of dues in case of failure of crops.
   - 51E. Bar to jurisdiction of Courts in respect of order of suspension.
   - 51F. Procedure when landholder or tenant collects dues during period of suspension.
   - 51G. Extension of period for payment of instalments, when order of suspension made.
   - 51H. Extension of period of limitation, when order of suspension made.
   - 51J. Interest not to accrue during period of suspension.
13. Amendment of Schedule B.

PART II.—*Past claims and charges in respect of the Drainage Schemes of Howrah and Rajapur.*

SECTION.

14. Recovery, under the certificate procedure, of certain subsisting claims in respect of the Howrah and Rajapur drainage schemes.

15. Reduction of past charges in respect of the Howrah and Rajapur drainage schemes.

16 Refunding or crediting of reduction to landholder.

17. Proportionate reduction in amounts recoverable by landholder from tenants.

18. Proportionate reduction in amounts recoverable by superior tenants from under-tenants.

19. Power to make rules as to reductions.

A

BILL

TO

Amend the Bengal Drainage Act, 1880.

WHEREAS it is expedient to amend the Bengal Drainage Act, 1880, in the manner hereinafter appearing; Ben. Act VI of 1880.

It is hereby enacted as follows:—

Short title.

1. This Act may be called the Bengal Drainage (Amendment) Act, 1902.

PART I.—*Amendment of the Bengal Drainage Act, 1880.*

Amendment of section 3, Bengal Act VI of 1880

2. *In section 3 of the Bengal Drainage Act, 1880, after the definition of "Collector" the following shall be inserted, namely:—*

"Certificate Officer" means a Certificate Officer as defined in clause (2) of section 4 of the Public Demands Recovery Act, 1895. Ben. I of 1895.

Amendment of section 26, and insertion of new section, 26A.

3. *For section 26 of the said Bengal Drainage Act, 1880, the following shall be substituted, namely:—* Ben. VI of 1880.

"26. Interest shall *be charged on* all such advances *until the same have been recovered.*

Interest to be charged on such advances.

Rate of interest, and barring of compound interest.

"26A. (1) *In every case in which the charging of interest is authorised by this Act, the rate chargeable shall be four per centum per annum.*

(2) *No compound interest shall be charged in any case.*

EXPLANATION.—*The interest recoverable from a tenant under section 42, clause (b), section 43, clause (b), section 44 or section 44A shall not be deemed to be 'compound interest' within the meaning of this section, although it includes simple interest upon interest which has been paid by a landholder or superior tenant in pursuance of this Act.*"

Amendment of section 28.

4. *In section 28, sub-section (2), of the said Act, for the words and figures "the interest mentioned in section 26" the word "interest" shall be substituted.*

Repeal of section 29 and portions of sections 30, 31, 38 and 42 to 44.

5. *The following portions of the said Act are hereby repealed, namely:—*

section 29,

in section 30, the figures and word "26 or,"

in section 31, the words "upon such sums at five per centum per annum," and the words and figures "and any interest payable under section 29, and any interest payable under clause (1) of section 26, but not paid or recovered before the apportionment under section 28,"

in section 38, the words "thereupon at five per centum per annum,"

in clause (b) of section 42, and in clause (b) of section 43, the words "at the rate of five per centum per annum," and

in sub-section (3) of section 44, the words "at five per centum per annum."

(PART I.—*Amendment of the Bengal Drainage Act, 1880—Clauses 6—8.*)

Insertion of new section, 36A.

6. After section 36 of the said Act the following shall be inserted, namely :—

"36A. (*1*) If any order *passed* under section 36, *so far as it declares what* persons are liable to pay any sum under this Act in respect of any land, appears at any time to *require revision*,—

Power to add to, or alter, declaration as to names of persons liable to pay.

(*a*) by reason of the omission of the name of any co-sharer of such land, or

(*b*) by reason of any change having taken place in the ownership or joint ownership of such land, *or*

(*c*) *for any other substantial reason*,

the Collector may, on the application of any holder of the land, or of his own motion, and after such inquiry *and upon such conditions* (*if any*) as he may think proper, add to or alter such order:

Provided that every person whose name is so added or who is materially affected by any such alteration has had an opportunity of being heard by the Collector.

(*2*) Any person who is dissatisfied with any addition or alteration made under sub-section (*1*) may, within one month after the same was made, appeal to the Commissioner of the Division.

(*3*) The Commissioner shall cause notice of the day fixed for the hearing of such appeal to be published in the manner prescribed by section 35; and shall, on the day so fixed, hear such appeal and all objections thereto advanced by persons interested, and may confirm or revise the addition or alteration, or may remit the case to the Collector for further consideration and revision. [Cf. Ben. Act VI of 1880, s. 35.]

(*4*) The decision of the Commissioner on any such appeal shall be final.

(*5*) Every addition and alteration made under this section shall be published, in such manner as to the Collector may seem fit, after the expiration of one month—

(*i*) from the time when the addition or alteration was made, or

(*ii*) if any appeal has been preferred under sub-section (*2*), from the decision of the appeal;

and the addition or alteration shall take effect from the date of such publication; and proceedings may thereupon be taken under this Act, in respect of such addition or alteration, as if a new order embodying it had been made under section 36."

Amendment of section 37.

7. (*1*) *In section 37 of the said Act,*—

for the words "its service" the words "the service thereof" shall be substituted, and

for the words "at the rate of five per centum per annum" the words "up to the day of payment" shall be substituted.

(*2*) *The words "at the said rate," in the said section 37, are hereby repealed.*

Insertion of new Part, IVA.

8. After section 41 of the said Act the following shall be inserted, namely :—

"PART IVA.

"RECOVERY OF SHARE OF PAYMENTS FROM CO-SHARERS.

"41A. When any landholder has made any payment under the foregoing provisions of this Act in respect of land which he holds jointly with other persons, and such payment exceeds the amount which is proportionate to his individual interest in the land, he may— [Cf. Ben. Act IX of 1889, s. 48.]

Power to recover share of payments from co-sharers.

(PART I.—*Amendment of the Bengal Drainage Act, 1880.*—*Clauses 9, 10.*)

(*a*) recover from his co-sharers, respectively, such contributions towards such payment as are proportionate to their individual interests in the land, either—

(*i*) in the same manner *in which* arrears of rent *are recoverable under the Bengal Tenancy Act, 1885*, and under similar penalties, or VIII of 1885.

(*ii*) if such co-sharers have been declared by any order *passed* under section 36 or revised under section 36A to be liable to pay—upon application to the Collector *as hereinafter provided*; or

(*b*) take credit for such contributions as aforesaid in any adjustment of accounts between himself and his co-sharers."

Insertion of new sections, 44A and 44B.

9. After section 44 of the said Bengal Drainage Act, 1880, the following shall be inserted, namely:— Ben. VI of 1880.

"44A. (*1*) If any landholder or superior tenant has made any payment under the foregoing provisions of this Act in respect of lands which are or were held by tenants immediately from him, and which have been benefited by any scheme or works carried out under this Act,

Recovery, under the certificate procedure, of payments made in respect of land held by tenants.

and if he has not *enhanced the rent of such tenants under* section 42, clause (*a*), or section 43, clause (*a*), *or* recovered *under* section 42, clause (*b*), section 43, clause (*b*), *or section 44* the sums due to him,

he may, upon application to the Collector *as hereinafter provided*, but subject to the provisions of sub-section (*1*) of section 44 as to instalments, recover from such tenants such sums as he may be entitled to according to the proportion and under the rules laid down in clause (*c*) of section 42, with interest from the date of such payment.

(*2*) *An application in respect of a payment may be made under this section by a landholder who was declared by an order passed under section 36 to be liable to make such payment, although his name has been removed, by an order made under section 36A, from the list of persons declared liable to make payments.*

(*3*) If any tenants *referred to in sub-section* (*1*) have *transferred* their *tenancies*, the sums *referred to in that sub-section* may be recovered *thereunder*—

(*a*) from *the said* tenants for the period during which they occupied the benefited land since the *carrying out* of the said scheme or works, *or*

(*b*) *from the tenants in possession.*

"*44B. Notwithstanding anything hereinbefore contained, no sum shall be recoverable under section 42, clause* (*b*), *section 43, clause* (*b*), *section 44 or section 44A, in respect of any lands which have been benefited by any scheme or works carried out under this Act, when, in consequence of such scheme or works,*—

Bar to recovery of money from tenants in certain cases.

(*a*) *the rent of such lands has been increased, or*

(*b*) *rent has for the first time been imposed on such lands.*"

Amendment of section 45.

10. In section 45 of the said Act, after the figures "43" the words and figures "or under section *44A*" shall be inserted.

(PART I.—*Amendment of the Bengal Drainage Act, 1880.*—*Clauses 11, 12.*)

Amendment of section 48.

11. (*1*) At the end of sub-section (*1*) of section 48 of the said Act the following shall be added, namely:— Ben. VI of 1880.

"and for that purpose the procedure prescribed by section 41A or section *44A* and sections *51B and 51C* shall be applicable."

(*2*) *In sub-section (3) of section 48 of the said Act, for the word "five" the word "four" shall be substituted.*

Insertion of new sections, 51A to 51J.

12. After section 51 of the said Act the following shall be inserted, namely:—

Recovery, under the certificate procedure, of payments made in respect of land held free of rent or revenue.

"51A. Any person who has been determined under section 50 to be the landholder in respect of land, held free of rent or revenue, which has benefited by any scheme or works carried out under this Act, and who has made any payment under the foregoing provisions of this Act in respect of such land, may, upon application to the Collector *as hereinafter provided, but* subject to the provisions of section 51, recover the amount of such payment from *any person holding* such land *immediately below him.*

Further provisions as to applications under section 41A, 44A or 51A.

"51B. (*1*) Every application to the Collector under section 41A for the recovery of contributions from co-sharers towards a payment made by a landholder under the foregoing provisions of this Act must— [Cf. Ben. Act IX of 1880, section 49.]

(*a*) be made within *six months* after such payment was made, and

(*b*) specify the amount of such payment, and the amount of such contributions due from each co-sharer.

(*2*) *Every application to the Collector under section 44A or section 51A for the recovery of sums due, from tenants of, or persons holding, lands benefited by any scheme or works carried out under this Act, on account of any payment made by the applicant under the foregoing provisions of this Act, must—*

(*c*) be made within *six months* after such *sums became due,*

(*d*) specify the amount of such payment, *and the date on which it was made,*

(*e*) specify the amount of such *sums* due from each *tenant or person holding land, and the date on which it became due,* and

(*f*) be accompanied by a declaration, signed by the applicant and stating—

(*i*) that he has not, *on account* of the said scheme or works, enhanced the rent, *if any, payable in respect* of the said lands or any of them, and

(*ii*) that he has not taken from such tenants *or persons holding land,* or any of them, any premium on account of such scheme or works.

(*3*) Every application under section 41A, section *44A* or section 51A must—

(*g*) be signed and verified in the manner provided by sections 51 and 52 of the Code of Civil Procedure for the signature and verification of plaints, XIV of 188.

(*h*) be accompanied by a court-fee of eight annas, and

(*j*) request the Collector to make a certificate *authorising the recovery of the said* contributions *or sums, as the case may be, under* the Public Demands Recovery Act, 1895. Ben. I of 1895.

(PART I.—*Amendment of the Bengal Drainage Act, 1880 — Clause 12.*)

(*4*) Every declaration made under clause (*f*) shall, for the purposes of section 199 of the Indian Penal Code, be deemed to be a declaration which the Collector is authorised by law to receive as evidence. XLV of 1860.

(*5*) If the Collector at any time has reason to believe that any declaration accompanying an application as aforesaid, or any part thereof, is false, he may reject the application and leave the applicant to pursue his claim in a Civil Court.

"51C. (*1*) Upon receiving any such application, the Collector may, if he thinks fit, make a certificate as aforesaid. [Cf. Ben Act IX of 1880, s. 49.]

Grant of certificate, and effect thereof.

(*2*) Every such certificate shall have the same effect as a certificate made under section 7 of the said Public Demands Recovery Act, 1895; and the same notices shall be issued and the same proceedings may be taken, with respect thereto, by the *Certificate Officer*, as in the case of a certificate *made* under that section. Ben. I of 1895.

(*3*) The person in whose favour *any such* certificate is made shall be deemed to be the decree-holder for the amount mentioned in the certificate, *and the person against whom the certificate is made shall be deemed to be the judgment-debtor for the said amount;* and all proceedings taken by the *Certificate Officer* for the recovery of such amount shall be taken at the instance of the *first-mentioned* person, and at his cost, and on his responsibility, and not otherwise.

(*4*) If any person against whom *any such* certificate is made objects that the contributions *or sums* claimed by the person who applied for the certificate are not legally due, or exceed the *sums* which the applicant could recover from him in a Civil Court as being payable in respect of his individual interest in the land, and if the *Certificate Officer* considers there is probable ground for such objection, the *Certificate Officer* may modify the certificate or, if he thinks fit, cancel the certificate and leave the applicant to pursue his claim in a Civil Court.

"51D. (1) If, in any area benefited by any scheme or works carried out under this Act, there has occurred in any year a total or serious failure of crops, then, notwithstanding anything hereinbefore contained, the Collector may, [Cf. U. P. Act, II of 1901, ss. 50 (1), 51 (1).]

Power of Collector to suspend recovery of dues in case of failure of crops

after such inquiry (if any) as he deems necessary, and with the previous sanction of the Commissioner of the Division,

by written order, suspend, for the whole or any part of that year, the recovery of all or any sums which are recoverable from landholders and tenants, respectively, in respect of such area under the foregoing provisions of this Act.

(2) Every such order shall be published in the manner prescribed in section 12 for the publication of the notifications referred to in that section.

(3) When any such order has been duly published, all proceedings under the Public Demands Recovery Act, 1895, and all suits by landholders or tenants, for the recovery of any sums to which such order relates, shall be stayed during the period specified in the order. [Cf. U. P. Act, II of 1901, s. 51 (3).] Ben. I of 1895.

"51E. An order duly made and published under section 51D shall not be questioned in any Civil or Revenue Court. [Cf. U. P. Act, II of 1901, ss. 50 (2), 51 (2).]

Bar to jurisdiction of Courts in respect of order of suspension.

"51F. If any landholder or tenant, during any period specified in an order duly made and published under section 51D, collects any sums payable to him to which such order relates, then all sums payable by him to which such order relates may be recovered from him as if such order had not been made. [Cf. U. P. Act, II of 1901, s. 51 (5).]

Procedure when landholder or tenant collects dues during period of suspension

(PART I.—*Amendment of the Bengal Drainage Act, 1880.—Clause 13.*—PART II.—*Past claims and charges in respect of the drainage schemes of Howrah and Rajapur.—Clauses 14, 15.*)

Extension of period for payment of instalments, when order of suspension made.

"*51G. When an order has been duly made and published under section 51D, suspending the recovery of any sums for any period, then, if such sums form part of a sum which is, in pursuance of this Act, payable by instalments, the period remaining for the payment of such instalments shall be extended by the period specified in such order, and no more than one instalment of the sum remaining due shall be payable in any succeeding year.*

Extension of period of limitation, when order of suspension made.

"*51H. When an order has been duly made and published under section 51D, suspending the recovery of any sums for any period, such period shall be excluded in computing the period of limitation prescribed for a suit or application for the recovery of such sums.*

[*Cf. C. P. Act, II of 1908, s. 51 (4).*]

Interest not to accrue during period of suspension.

"*51J. When an order has been duly made and published under section 51D, suspending the recovery of any sums for any period, then, notwithstanding anything hereinbefore contained, no interest shall accrue on such sums during such period.*"

Amendment of Schedule B.

13. (*1*) *In Schedule B to the said Bengal Drainage Act, 1880, for the word "five" the word "four" shall be substituted.* Ben. VI of 1880.

(*2*) *To the said schedule the following shall be added, namely:—*

"*together with simple interest, at the rate of four per centum per annum, on all instalments remaining unpaid at the date of each such payment.*"

PART II.—*Past claims and charges in respect of the drainage schemes of Howrah and Rajapur.*

Recovery, under the certificate procedure, of certain subsisting claims in respect of the Howrah and Rajapur drainage schemes.

14. The provisions of sections 41A, *44A*, 51A, *51B* [*except clauses* (*a*) *and* (*c*) *and 51C* of the Bengal Drainage Act, 1880, as amended by this Act, as to the recovery of moneys upon application to the Collector, shall apply also to all claims *which have already accrued* in respect of the drainage schemes of Howrah and Rajapur *and* which, at the commencement of this Act, are unsatisfied *and have not been barred by limitation:* Ben. VI of 1880.

Provided that every application under any of the said sections in respect of any such claim be made within *three months* from the commencement of this Act.

Reduction of past charges in respect of the Howrah and Rajapur drainage schemes.

15. (*1*) *The Collector shall, as soon as conveniently may be, revise all orders heretofore passed under section 36 of the said Bengal Drainage Act, 1880, which declared the sums payable in respect of lands benefited by the drainage schemes of Howrah and Rajapur, so as—* Ben. VI of 1880.

(*a*) *to reduce all charges for interest to the sums which would have been chargeable if the amendments made by this Act had been in force when such orders were passed, and*

(*b*) *to make such reductions* (*if any*) *in other charges as may be directed by the Local Government.*

(*2*) *When the reductions directed by or under sub-section* (*1*) *have been made in respect of any scheme, the Collector shall make an order stating—*

(*i*) *that all holders of land benefited by the scheme, and all tenants of such land, are entitled to proportionate relief,*

(*ii*) *how such relief is to be apportioned in respect of each class of such land,*

(PART II.—*Past claims and charges in respect of the drainage schemes of Howrah and Rajapur.—Clauses 16—19.*)

(iii) *such particulars as to the determination of the persons who are entitled to such relief, and as to the determination of the sums to which such persons are respectively entitled, as may be prescribed by rules made under section 19, and*

(iv) *any other particulars prescribed by such rules.*

(3) *Every order made under sub-section (2) shall be subject to the approval of the Commissioner.*

(4) *When any such order has been so approved, it shall be published in such manner as to the Collector may seem fit, and shall, after such publication, be conclusive evidence in any Civil Court, and in any proceedings under this Act, of the matters stated therein.* [Cf. Ben. Act VI of 1880, s. 27.]

Refunding or crediting of reduction to landholder.

16. (1) *If, prior to the publication of any order made under section 15 in respect of any scheme, the whole sum payable by any landholder in respect of such scheme has been duly paid, then such landholder shall, upon such publication, be entitled to a refund of the sum to which he is entitled under such order.*

(2) *If, when any order made under section 15 in respect of any scheme has been duly published, any sum payable by any landholder in respect of such scheme still remains to be paid, then the sum to which such landholder is entitled under such order shall be credited to him.*

Proportionate reduction in amounts recoverable by landholder from tenants.

17. (1) *When any sum has been refunded or credited to a landholder under section 16 of this Act, the amounts which were recoverable by him under section 42, clause (b), section 44, section 44A or section 51A of the said Bengal Drainage Act, 1880, from persons who have held or are now holding land immediately from him, shall be proportionately reduced.*

(2) *Any such persons who have paid such amounts shall have a right, at their option,—*

(a) *to a refund of the sums to which they are entitled under sub-section (1), or*

(b) *to take credit for such sums in any adjustment of accounts between themselves and the landholder.*

Proportionate reduction in amounts recoverable by superior tenants from under-tenants.

18. (1) *When any sum recoverable from a superior tenant is liable to reduction under section 17 of this Act, the amounts which were recoverable by him under section 43, clause (b), section 44, section 44A or section 51A of the said Bengal Drainage Act, 1880, from persons who have held or are now holding land directly from him, shall be proportionately reduced.*

(2) *Any such persons who have paid such amounts shall have a right, at their option, —*

(a) *to a refund of the sums to which they are entitled under sub-section (1), or*

(b) *to take credit for such sums in any adjustment of accounts between themselves and the superior tenant.*

Power to make rules as to reductions.

19. (1) *The Local Government may, after previous publication, make rules for carrying out and giving effect to the provisions of sections 15 to 18.*

(2) *In particular, and without prejudice to the generality of sub-section (1), the Local Government may—*

(a) *prescribe the particulars to be stated in orders made under section 15, and*

(b) *declare the conditions under which refunds and credits shall be made under sections 16, 17 and 18.*

(3) *All rules made under this section shall be published in the Calcutta Gazette and in such other manner (if any) as the Local Government may direct.*

CALCUTTA ;
The 19th August, 1902.

F. G. WIGLEY,
Secretary to the Bengal Council, and
Assistant Secretary to the Govt. of Bengal,
Legislative Department.

The Calcutta Gazette.

WEDNESDAY, AUGUST 20, 1902.

PART IVA.

Proceedings of the Bengal Legislative Council.

GOVERNMENT OF BENGAL.

LEGISLATIVE DEPARTMENT.

Abstract of the Proceedings of the Council of the Lieutenant-Governor of Bengal, assembled under the provisions of the Indian Councils Acts, 1861 and 1892.

The Council met in the Council Chamber on Monday, the 11th August, 1902.

Present:

The Hon'ble SIR JOHN WOODBURN, K.C.S.I., Lieutenant-Governor of Bengal, *presiding.*
The Hon'ble MR. J. A. BOURDILLON, C.S.I.
The Hon'ble Mr. C. E. BUCKLAND, C.I.E.
The Hon'ble MR. B. L. GUPTA.
The Hon'ble MR. W. C. MACPHERSON.
The Hon'ble MR. E. W. COLLIN.
The Hon'ble MR. D. B. HORN.
The Hon'ble MR. R. T. GREER.
The Hon'ble MR. T. K. GHOSE.
The Hon'ble MAULVI SYED MAHOMED.
The Hon'ble MAHARAJA SIR RAVANESHWAR PRASHAD SINGH BAHADUR, K.C.I.E., of Gidhour.
The Hon'ble BABU CHATURBHOOJ SAHAY.
The Hon'ble BABU JOY GOBIND LAW, C.I.E.
The Hon'ble MAHARAJA MANINDRA CHANDRA NUNDY, of Cossimbazar.
The Hon'ble MR. A. A. APCAR.
The Hon'ble MAULVI SERAJ-UL-ISLAM, KHAN BAHADUR.

NEW MEMBERS.

The Hon'ble MR. C. E. BUCKLAND, the Hon'ble MR. E. W. COLLIN, the Hon'ble MR. D. B. HORN, the Hon'ble MAULVI SYED MAHOMED and the Hon'ble MAULVI SERAJ-UL-ISLAM, Khan Bahadur, took their seats in Council.

THE BENGAL DRAINAGE (AMENDMENT) BILL, 1902.

The Hon'ble Mr. MACPHERSON moved that the Bill to amend the Bengal Drainage Act, 1880, be referred again to the Select Committee. He said:—

"The notice paper states, Sir, that I am to present to the Council the Report of the Select Committee appointed in April last to consider the Bill to amend the Bengal Drainage Act of 1880. Hon'ble Members will remember that when this Bill was introduced in Council, the Hon'ble Babu Joy Gobind Law recommended that this opportunity should be taken to reduce the rate of interest which has been charged on drainage works under the Act of 1880 at 5 per cent., and to declare that the interest charged shall be simple instead of compound. You, Sir, favourably considered the Hon'ble Member's recommendation, and a letter was addressed under your order to the Government of India asking for permission to extend the scope of this Bill by introduction of clauses, firstly, reducing the rate of interest; secondly, declaring that interest under section 26 of the Act shall be simple, and not compound; thirdly, passing on to the tenants the proposed concession with regard to interest to be made to the landholders; and, fourthly, giving retrospective effect to this concession in the case of the Rajapore and Howrah Drainage schemes, for which drainage dues are still under collection. The Government of India have been pleased to sanction these proposals to reduce the rate of interest on drainage works to 4 per cent. Their letter, however, which is dated 29th July, was not received in time to be formally considered by the Select Committee, whose report on the Bill is dated 26th July, and the subject of interest is not mentioned in the Committee's report. At an informal meeting of some Members of the Select Committee which has been held since the receipt of the orders of the Government of India, it has been ascertained that to give a reduction of interest with retrospective effect in the case of the Rajapore and Howrah schemes, will involve a large number of amendments of the Act of 1880, in addition to those which are proposed in the Select Committee's report of the 26th July. You, Sir, have also been considering, with the Hon'ble Mr. Horn's assistance, whether some further relief cannot be given to the landholders and tenants responsible for the drainage costs in the Rajapore and Howrah areas by reduction of the charges made for establishments. Besides these points arising out of the reduction of the rate of interest and out of the possible reduction of other charges and the consequential relief which it is proposed to afford to all concerned, one or two other points have been recently suggested by Members of the Select Committee and by the Hon'ble Babu Chaturbhooj Sahay. In these circumstances, Sir, with your permission, and with the permission of the Council, I will move that this Bill be sent back to the Select Committee for further report and necessary amendment. I would express the hope that the further report of the Select Committee may be ready by the end of this week, and that both reports or a revised report may be considered at the next meeting of the Council."

The Motion was put and agreed to.

THE BENGAL TENANCY (VALIDATION AND AMENDMENT) BILL, 1902.

The Hon'ble MR. MACPHERSON moved for leave to introduce a Bill to validate certain transfers, made under the Bengal Tenancy Act, 1885, of shares in permanent tenures and shares in holdings at fixed rents or fixed rates; and to amend sections 18 and 106 of that Act. He said:—

"I move, Sir, for the permission of this Council to introduce a Bill to amend and supplement certain sections of the Bengal Tenancy Act, VIII of 1885. The Bill has two objects, neither of which may appear to be of very general interest, and both of which are somewhat technical, but, in fact, both objects are of considerable practical importance to many agricultural landlords and tenants. The first object of the Bill is to validate transfers of shares in permanent tenures and holdings at fixed rents made inadvertently without payment of the landlords' fees which are required to be paid under section 12 of the Bengal Tenancy Act. The Council may remember that the section which I have cited requires payment to the landlord of a fee of 2 per cent. of the annual value of the tenure at the time of transfer by the tenant. That fee must be tendered by the tenant to

the registering officer at the time when he presents for registration the document effecting the transfer. The registering officer sends the fee on to the Collector, and the Collector sends the fee to the landlord concerned. So, when a Civil Court sells a permanent tenure in execution of a decree other than a decree for arrears of rent, the purchaser, under the provisions of section 13 of the Tenancy Act, must pay the landlord's fee, and that fee is sent by the Court to the Collector and by the Collector to the landlord. Section 17 of the Tenancy Act makes these provisions apply to the transfers of shares in permanent tenures, subject to the provisions of section 88, which require the landlord's consent to be given in writing. Section 18 applies to raiyats holding at fixed rents the provisions applicable in the case of permanent tenure-holders. Now, in consequence of erroneous instructions issued in the Registration Department in the year 1888, Registering officers, until the year 1899, refused to receive fees for landlords tendered to them by parties on presentation of instruments whereby shares of tenures were transferred. Similarly, and perhaps, because they were misled by the erroneous instructions issued in the Registration Department, the Civil Courts have frequently neglected to perform the duty imposed by section 13 of the Tenancy Act of requiring purchasers at sales in execution of decrees to pay into Court the landlord's fee. The erroneous instructions issued in the Registration Department in 1888 were withdrawn by a Notification of the Bengal Government issued in 1899. And in a Circular issued in 1900, the High Court gave instructions to the Courts with a view to preventing mistakes in the future. In the meantime, however, the High Court has ruled that transfers of tenures made under section 13 of the Tenancy Act in which the landlords' fees have not been paid are invalid, and the Subordinate Civil Courts, following this ruling, have held that transfers of shares of tenures made by registered instruments when landlords' fees have not been paid are also void. The serious consequences of these rulings, which invalidate many transfers of shares in tenures made, especially in the Eastern Bengal districts, were reported by the Commissioner of Dacca and were also brought to notice in an address presented last year to the Lieutenant-Governor by the Barisal People's Association. It is the first object of the Bill to set these matters right and to declare that transfers of shares of tenures and of holdings at fixed rents shall not be invalid merely on the ground that the landlord's fee was not paid at or about the date of the transfer. The Bill will not abolish the landlord's fee, but allows a subsequent payment of it in the case of past transfers.

"The second object of the Bill is to indicate clearly the period of limitation for the institution of suits before Settlement Officers under section 106 of the Bengal Tenancy Act in connection with settlement proceedings. That section was badly drafted, with the result that it has been construed in a manner which was probably not contemplated by the Legislature. It is proposed to make it clear that the section limits the period within which a suit may be instituted before Settlement Officers to two months after publication of the record of rights."

The Motion was put and agreed to.

The Hon'ble MR. MACPHERSON applied to the President to suspend the Rules of Business for the purpose of introducing the Bill.

The Hon'ble the PRESIDENT having declared the Rules suspended—

The Hon'ble MR. MACPHERSON introduced the Bill and moved that it be read in Council.

The Motion was put and agreed to, and the Bill was read accordingly.

The Council was then adjourned to Monday, the 25th August, 1902.

CALCUTTA,
The 18th August, 1902.

F. G. WIGLEY,
Secy. to the Bengal Council, and
Asst. Secy. to the Govt. of Bengal,
Legislative Dept.

APPENDIX TO

The Calcutta Gazette.

WEDNESDAY, AUGUST 20, 1902.

NOTICES TO MARINERS.

GOVERNMENT OF BENGAL—MARINE DEPARTMENT.

NOTICE TO MARINERS—No. 244.

[First Publication.]

INDIA, EAST—COROMANDEL, SOUTH COAST.

Point Calimere—Date of alteration extended.

WITH reference to Notice to Mariners No. 40, dated the 22nd February last, issued by this office, the Presidency Port Officer, Madras, has given further notice (No. 43 of 1902) that the date for the alteration of the light at Point Calimere noted therein has been altered from 1st September to 1st December 1902.

E. J. BEAUMONT, COMDR., R.I.M.,
Port Officer of Calcutta.

Published for general information.

C. B. BAYLEY,
Asst. Secy., Marine Department.

CALCUTTA, *the 13th August 1902.*

GOVERNMENT OF BENGAL—MARINE DEPARTMENT.

NOTICE TO MARINERS—No. 245.

[First Publication.]

INDIA, EAST—MADRAS COAST.

Masulipatam light—Date of alteration postponed.

WITH reference to Notice to Mariners No. 41, dated the 22nd February last, issued by this office, the Presidency Port Officer, Madras, has given further notice (No. 44 of 1902) that the alteration of the light at Masulipatam is postponed. Further notice will be given of the date from which the intended alteration will take place.

E. J. BEAUMONT, COMDR., R.I.M.,
Port Officer of Calcutta.

Published for general information.

C. B. BAYLEY,
Asst. Secy., Marine Department.

CALCUTTA, *the 13th August 1902.*

GOVERNMENT OF BENGAL—MARINE DEPARTMENT.

NOTICE TO MARINERS—No. 246.

[First Publication.]

INDIA, EAST—COROMANDEL COAST.

Cuddalore—Alteration of the character of light.

THE Presidency Port Officer, Madras, has given notice (No. 45 of 1902) that from and after 1st October 1902, the light at Cuddalore will be altered from D 6th Order red fixed to D 4th Order white occulting showing four occultations every minute visible from all directions seaward, distance 12 miles.

E. J. BEAUMONT, COMDR., R.I.M.,
Port Officer of Calcutta.

Published for general information.

C. B. BAYLEY,
CALCUTTA, *the 13th August 1902.* *Asst. Secy., Marine Department.*

GOVERNMENT OF BENGAL—MARINE DEPARTMENT.

NOTICE TO MARINERS—No. 247.

[First Publication.]

INDIA, EAST—MADRAS COAST.

Vizagapatam—A temporary white light exhibited.

THE Presidency Port Officer, Madras, has given notice (No. 46 of 1902) that a temporary white light visible 10 miles in clear weather will be exhibited (when information is received from the Agents of Steam Ship Companies that a steamer is expected) from the roof of a small white-washed building near the Port Office at the Port of Vizagapatam, as a mark for the anchorage off the port.

E. J. BEAUMONT, COMDR., R.I.M.,
Port Officer of Calcutta.

Published for general information

C. B. BAYLEY,
CALCUTTA, *the 13th August 1902.* *Asst. Secy., Marine Department.*

GOVERNMENT OF BENGAL—MARINE DEPARTMENT.

NOTICE TO MARINERS—No. 248.

[First Publication.]

INDIA, SOUTH-EAST—CEYLON, NORTH-WEST COAST.

Chuttram—Erratum in position given.

WITH reference to Notice to Mariners No. 194, dated the 30th June last, issued by this Office, the Presidency Port Officer, Madras, has given further notice (No. 47 of 1902) as follows:—

For "Chuttram" in Long. 80° 37′
Read "Chuttram" in Long. 79° 23′.

E. J. BEAUMONT, COMDR., R.I.M.,
Port Officer of Calcutta.

Published for general information.

C. B. BAYLEY,
CALCUTTA, *the 13th August 1902.* *Asst. Secy., Marine Department.*

GOVERNMENT OF BENGAL—MARINE DEPARTMENT.

NOTICE TO MARINERS—No. 249.

[First Publication.]

INDIA, WEST—Sind coast.

Approach to Karachi harbour—Less water reported.

The Bombay Government has given notice (No. 93 of 1902) that the Captain of H. M. S. *Lapwing* reports having, on 14th July 1902, obtained 4 to 5 fathoms less water than shown on the chart, Cape Monze to Kediwari Mouth, No. 41, in the following approximate positions:—

Manora Point	N. 53½° E. (true)	distant 8 miles	6¾ fathoms.
Ditto	N. 54° E. true)	distant 7 miles	8 fathoms.
Ditto	N. 55° E. (true)	distant 6 miles	6½ fathoms.
Ditto	N. 53° E. (true)	distant 4 miles	7 fathoms.

The soundings are not reduced.

This Notice affects the following Admiralty Charts:—Cape Monze to Kediwari Mouth, No. 41; Muskat to Karachi, No. 38, and West Coast of Hindustan Pilot, 4th Edition, 1898, page 304.

E. J. Beaumont, Comdr., r.i.m.,
Port Officer of Calcutta

Published for general information.

C. B. Bayley,
Asst. Secy., Marine Department.

Calcutta, *the 13th August 1902.*

GOVERNMENT OF BENGAL—MARINE DEPARTMENT.

NOTICE TO MARINERS—No. 250.

[First Publication.]

AFRICA, NORTH-EAST—Gulf of Aden.

Aden harbour—Datum pile washed away.

With reference to Notice to Mariners No. 118, dated the 2nd May last, issued by this Office, the Bombay Government has given notice (No. 97 of 1902) that the Datum pile has been washed away: the patch on which it was erected is now marked by a buoy painted red.

E. J. Beaumont, Comdr., r.i.m.,
Port Officer of Calcutta.

Published for general information.

C. B. Bayley,
Asst. Secy., Marine Department.

Calcutta, *the 13th August 1902.*

GOVERNMENT OF BENGAL—MARINE DEPARTMENT.

NOTICE TO MARINERS—No. 251.

[First Publication.]

BAY OF BENGAL—Burma coast.

Baragua flat lightship.

Telegraphic communications have been received from the Principal Port Officer, Burma, Rangoon, stating that the Baragua flat lightship, which was off its station on the 9th instant, was replaced in correct position on the evening of the 12th idem.

E. J. Beaumont, Comdr., r.i.m.,
Port Officer of Calcutta.

Published for general information.

C. B. Bayley,
Asst. Secy., Marine Department.

Calcutta, *the 16th August 1902.*

GOVERNMENT OF BENGAL—MARINE DEPARTMENT.

NOTICE TO MARINERS—No. 235

[Second Publication.]

INDIA, WEST—BOMBAY COAST.

Bombay harbour—Temporary removal of the Outer light-vessel.

THE Bombay Government has given notice (No. 87 of 1902) that the Light-vessel *Bombay* will be brought in for docking, examination and repairs on the 15th October 1902. During the period she is off her station a Pilot Schooner, anchored in the Light-vessel's position, will exhibit, in addition to her Anchor Light, two steamers' Masthead Lights, lashed back to back and suspended on a stay between the masts at a height of 56 feet above the water line.

E. J. BEAUMONT, COMDR., R.I.M.,
Port Officer of Calcutta

Published for general information.

C. B. BAYLEY,
Asst Secy., Marine Department.

CALCUTTA, *the 5th August 1902.*

GOVERNMENT OF BENGAL—MARINE DEPARTMENT.

NOTICE TO MARINERS—No. 236.

[Second Publication.]

INDIA, WEST—MALABAR COAST.

Tellicherri—Positions of Port pillars.

THE Bombay Government has given notice (No. 88 of 1902) that the present positions of the Port Pillars at Tellicherri are as follows:—

North Port Pillar is situated on the point westward of the entrance to Anjekandi River and from it—

Tellicherri Light-house bears	...	S. 47° 30′ E.
Kodali Point bears ..	...	S 79° 30′ E.
82-feet Hill bears ...	...	N. 18° 30′ W.

Distance 200 feet.

South Port Pillar is situated on the Nilot Point and from it—

Tellicherri Light-house bears	...	N. 38° 30′ W.
207-feet Hill bears ...	...	N. 62° 30′ E.
Parchikun Hill bears ...	...	S. 87° 00′ E.

Bearings are true.

This Notice affects the following Admiralty Chart:—Anchorages on the West Coast of India—Kannanur Anchorage—Tellicherri Anchorage, No. 1322, and West Coast of Hindustan Pilot, 4th Edition, 1898, page 139.

E. J. BEAUMONT, COMDR., R.I.M.,
Port Officer of Calcutta.

Published for general information.

C. B. BAYLEY,
Asst. Secy., Marine Department

CALCUTTA, *the 5th August 1902.*

GOVERNMENT OF BENGAL—MARINE DEPARTMENT.

NOTICE TO MARINERS—No. 237.

[Second Publication.]

BAY OF BENGAL—BURMA COAST.

Rangoon river—Umbrella beacon blown down—New beacon erected.

THE Bombay Government has given notice (No. 90 of 1902) that a new beacon has been erected S. 25° E. 250 feet from the site of the Umbrella beacon which was blown down in the cyclone of 6th May 1902

This new beacon is only of use for No. 1 track, Choki Lumps. As being erected to south-eastward of site of old Umbrella Beacon, it has ceased to be a mark (when on with Syriam Pagoda) for the south-east end of the D'Silva Shoal, the mark for which is now Syriam Pagoda on with east side of Umbrella tree.

The new beacon will be referred to in future as North Beacon.

This Notice affects the Admiralty Chart:— Rangoon River and approaches, No. 833: Also, Bay of Bengal Pilot, 3rd Edition, 1901, page 354.

E. J. BEAUMONT, COMDR., R.I.M.,
Port Officer of Calcutta

Published for general information.

C. B. BAYLEY,
Asst. Secy., Marine Department.

CALCUTTA, *the 5th August 1902.*

GOVERNMENT OF BENGAL—MARINE DEPARTMENT.

NOTICE TO MARINERS—No. 238.

[Second Publication.]

EASTERN ARCHIPELAGO—TIMAR, NORTH COAST.

Brilliant bank—Particulars given.

THE British Admiralty has given notice (No. 426 of 1902) that Brilliant bank, Dilhi harbour approach, is of small extent, with a least depth of 13 fathoms over it, and is situated with Dilhi lighthouse bearing S. 19° E., distant 13¼ cables, and Britomart (Fotocama) point N.71° E., or about 6 cables S. 35° W. from its position as shown on the Chart.

Approximate position on Admiralty Chart No. 1460, lat. 8° 30¾′ S., long. 125° 34′ E.

(*Variation 2° Easterly in 1902.*)

This Notice affects the following Admiralty Chart:—Dilhi harbour on Chart No. 1460: Also, Eastern Archipelago, vol. II, 1893, page 281; and Supplement, 1899, page 30.

E. J BEAUMONT, COMDR., R.I M.,
Port Officer of Calcutta.

Published for general information.

C. B. BAYLEY,
Asst. Secy., Marine Department.

CALCUTTA, *the 8th August 1902.*

GOVERNMENT OF BENGAL—MARINE DEPARTMENT.

NOTICE TO MARINERS—No. 239.

[Second Publication.]

EASTERN ARCHIPELAGO—BORNEO, SOUTH COAST.

Barito river—Depth on reef in approach.

THE British Admiralty has given notice (No. 428 of 1902) that the depth over the reef situated about 14½ miles S. 12° E from Burung point, Barito river, is 8 feet, and not 2 fathoms, as shown on the Chart.

Approximate position, lat. 3° 48′ S., long. 114° 33′ E.

(*Variation 2° Easterly in 1902.*)

This Notice affects the following Admiralty Charts:—Eastern Archipelago, No. 941b: Also, Eastern Archipelago, part II, 1893, page 297; and Supplement, 1899, page 32.

E. J. BEAUMONT, COMDR., R.I.M.,
Port Officer of Calcutta.

Published for general information.

C B BAYLEY,
Asst. Secy., Marine Department.

CALCUTTA, *the 8th August 1902.*

GOVERNMENT OF BENGAL—MARINE DEPARTMENT.

NOTICE TO MARINERS—No. 240.

[Second Publication.]

AUSTRALIA—QUEENSLAND, INNER ROUTE.

Lizard island and cape Melville—Particulars of certain shoals.

THE British Admiralty has given notice (No. 438 of 1902) that information, dated 27th April 1902, has been received from Commander C. E. Monro, H. M. Surveying Vessel *Dart*, containing particulars of the undermentioned newly found shoals off Lizard island and cape Melville:—

a. A shoal, with a least depth of 2¾ fathoms, situated with Lizard island bearing S. 6° E., distant 4¼ miles.

Approximate position, lat. 14° 35 ½′ S., long. 145° 27¾′ E.

This shoal is 1½ cables in extent, the bottom in its vicinity is very uneven As this reef is probably identical with that marked P. D., half a mile to the northward of it, the latter has been erased from the Charts.

b. A shoal, now named Singleton patch, which has a least depth of 5¼ fathoms over it, and is situated with Rocky point bearing S. 5° W., distant 4 miles, and Pipon islands lighthouse N. 72° W. It is about 1½ cables in extent North and South, and has depths of 12 fathoms around it.

c. A shoal, now named Aylen patch, one mile westward of Oswald shoal, with a least depth of 5 fathoms over it at low water springs, and is situated with Pipon islands lighthouse bearing S. 59° E., distant 2¾ miles, and Channel rocks S. 12° E. It is about 3 cables in extent North-east and South-west.

Broomfield rock was unsuccessfully searched for, and has in consequence been expunged from the Charts.

Approximate position, lat. 14° 12¾′ S., long. 144° 37⅛′ E.

(*Variation 5° Easterly in 1902.*)

This Notice affects the following Admiralty Charts:—Hope islands to Turtle group, No. 2923; Turtle group to Claremont point, No. 2922: Also, Australia Directory, vol. II, 1898, pages 359, 364, 365.

E. J. BEAUMONT, COMDR., R.I.M.,
Port Officer of Calcutta.

Published for general information.

C. B. BAYLEY,
Asst. Secy., Marine Department.

CALCUTTA, *the 8th August 1902.*

GOVERNMENT OF BENGAL—MARINE DEPARTMENT.

NOTICE TO MARINERS—No. 241.

[Second Publication.]

PERSIAN GULF, WESTERN SHORE—BAHREIN HARBOUR.

Shoal sounding in approach.

THE British Admiralty has given notice (No. 440 of 1902) that information, dated 13th June 1902, has been received from Mr. T. L. Molony, Master of the S S *Mozaffari*, that he obtained a sounding of 3½ fathoms in the position where a depth of 4¾ fathoms is shown on the Chart in the approach to Bahrein harbour, with Ras Rakkin bearing S. 26° E., distant 13 miles.

Approximate position, lat. 26° 23′ N., long 51° 8′ E.

(*Variation Nil in 1902.*)

This Notice affects the following Admiralty Chart:—Persian gulf, No. 2837b: Also Persian Gulf Pilot, 1898, page 126.

E. J. BEAUMONT, COMDR., R.I.M.,
Port Officer of Calcutta.

Published for general information.

C. B. BAYLEY,
Asst. Secy., Marine Department.

CALCUTTA, *the 8th August 1902.*

GOVERNMENT OF BENGAL—MARINE DEPARTMENT.

NOTICE TO MARINERS—No. 242.

[Second Publication.]

AFRICA, CAPE COLONY—TABLE BAY.

Robben island—Fog signal intended.

THE British Admiralty has given notice (No. 443 of 1902) that it is intended in about two months' time to establish at Robben island lighthouse, a fog explosive, which will, during thick or foggy weather, give *one report* every *five minutes.*

Approximate position, lat. 33° 49′ S., long. 18° 22½′ E.

Further Notice will be given when this signal has been established.

This Notice affects the following Admiralty Charts:—Cape Lopez to Cape of Good Hope, No. 1013; Honeyklip bay to port Natal, No. 2095; Table bay to Donkin bay, No. 2091; Cape of Good Hope to False bay, No. 636; Table bay to cape Agulhas, No. 2082; Table bay, No. 1920: Also, List of Lights, 1902, part IV, No. 807; part VI, No. 2; and Africa Pilot, part III, 1897, page 57.

E. J. BEAUMONT, COMDR., R.I.M.,
Port Officer of Calcutta.

Published for general information.

C. B. BAYLEY,
Asst. Secy., Marine Department.

CALCUTTA, *the 8th August 1902.*

GOVERNMENT OF BENGAL—MARINE DEPARTMENT.

NOTICE TO MARINERS—No. 243.

[Second Publication.]

AFRICA, SOUTH-EAST, CAPE COLONY—ALGOA BAY, EASTERN APPROACH.

Stalwart point—Shoal water extending from—

THE British Admiralty has given notice (No. 451 of 1902) that the shoal water off Stalwart point extends further from the shore than shown upon the Admiralty Charts.

As this report agrees with information already received, the shoal bank on the Chart has been extended to a distance of eight-tenths of a mile from the high-water line.

Approximate position, lat. 33° 28′ S, long. 27° 14′ E.

(*Variation 29° Westerly in 1902.*)

This Notice affects the following Admiralty Charts:—Waterloo bay to Bashee river, No. 2086; cape St. Francis to Waterloo bay, No. 2085: Also, Africa Pilot, part III, 1897, page 143.

E. J. BEAUMONT, COMDR., R.I.M.,
Port Officer of Calcutta.

Published for general information.

C. B. BAYLEY,
Asst. Secy., Marine Department.

CALCUTTA, *the 8th August 1902.*

GOVERNMENT OF BENGAL—MARINE DEPARTMENT.

NOTICE TO MARINERS—No. 227.

[Third Publication.]

BAY OF BENGAL—COROMANDEL COAST.

Mahabalipuram light—Incorrectly shown on certain charts.

THE British Admiralty has given notice (No. 411 of 1902) that on certain copies of Admiralty Chart No. 575, Mahabalipuram light is shown as a red fixed light instead of a *white group flashing* light, showing groups of *three flashes* every *ten seconds*, as described in the Admiralty List of Lights, part VI, 1902, No. 323.

Approximate position, lat. 12° 36¾′ N., long. 80° 11½′ E.

E. J. BEAUMONT, COMDR., R.I.M.,
Port Officer of Calcutta.

Published for general information.

C. B. BAYLEY,
Asst. Secy., Marine Department.

CALCUTTA, *the 28th July 1902.*

GOVERNMENT OF BENGAL—MARINE DEPARTMENT.

NOTICE TO MARINERS—No. 228.

[Third Publication.]

AUSTRALIA—QUEENSLAND.

Port Curtis—North Channel closed—Marks removed.

THE British Admiralty has given notice (No. 412 of 1902) that in consequence of the decreasing depth at the inner end of the North channel into port Curtis it is no longer safe for ordinary navigation, and its use in future must be confined during daylight to small local coasting vessels.

Also, that, on 10th May 1902, all the marks and lights used in navigating the North channel would be discontinued.

These would probably be the black buoy situated at a distance of 14 cables S. 84° E. from East point light, the red buoy situated 1¾ cables S. 40° E. from Settlement point, Oyster rock light, and the light-buoy, exhibiting a white fixed light, situated about 3 cables S.24° W. from Oyster rock light.

Approximate position, Oyster rock, lat. 23° 53′ S., long. 151° 22¾′ E.

(*Variation 8° Easterly in 1902.*)

This Notice affects the following Admiralty Charts:—Port Curtis, No. 1900: Also, List of Lights, part VI, 1902, No. 1267; and Australia Directory, vol. II, 1898, pages 180, 181, 182, 185.

E. J. BEAUMONT, COMDR., R.I.M.,
Port Officer of Calcutta.

Published for general information.

C. B. BAYLEY,
Asst. Secy., Marine Department.

CALCUTTA, *the 28th July 1902.*

GOVERNMENT OF BENGAL—MARINE DEPARTMENT.

NOTICE TO MARINERS—No. 229.

[Third Publication.]

KOREA—South coast.

Willes gulf anchorage—Rock in approach.

The British Admiralty has given notice (No. 413 of 1902) of the existence of a rock about one cable in extent, with a depth of three-quarters of a fathom over it, situated in the approach to the anchorage in Willes gulf, in lat 34° 52′ 55″ S., long. 127° 45′ 40″ E.

This Notice affects the following Admiralty Chart:—Korean archipelago, No. 104: Also, China Sea Directory, vol. IV, 1894, page 112.

E. J. Beaumont, Comdr., R.I.M.,
Port Officer of Calcutta.

Published for general information.

C. B. Bayley,
Asst. Secy., Marine Department.

Calcutta, *the 28th July 1902.*

GOVERNMENT OF BENGAL—MARINE DEPARTMENT.

NOTICE TO MARINERS—No. 230.

[Third Publication.]

AUSTRALIA, SOUTH—Lacepede bay.

Beacon erected.

The British Admiralty has given notice (No. 414 of 1902) that a triangular beacon with circular head, painted white, has been erected on the coast line about 5 miles to the south-westward of Kingston jetty to indicate the best holding ground in Lacepede bay. Vessels should anchor with this beacon bearing S.E. according to draught.

Approximate position, lat. 36° 54½′ S, long. 139° 47½′ E.

(*Variation 6° Easterly in 1902.*)

This Notice affects the following Admiralty Chart:—Lacepede bay on Chart No. 1006: Also, Australia Directory, vol. I, 1897, page 361.

E. J. Beaumont, Comdr., R.I.M.,
Port Officer of Calcutta.

Published for general information.

C. B. Bayley,
Asst. Secy., Marine Department.

Calcutta, *the 28th July 1902.*

GOVERNMENT OF BENGAL—MARINE DEPARTMENT.

NOTICE TO MARINERS—No. 231.

[Third Publication.]

JAPAN—Kiusiu, north coast.

Spex strait approach—Particulars and positions of sunken rocks named Takose and Nakazone.

The British Admiralty has given notice (No. 418 of 1902) of the existence of the undermentioned rocks to the southward of Atsusi no o sima in the approach to Spex strait:—

a. A rock named Takose, with a depth of 2¼ fathoms over it, situated with the northern extremity of Do sima bearing S. 79 W., distant 17 cables, and Kassa yama △ N. 24° W.

Approximate position, lat. 33° 27¼′ N., long. 129° 33½′ E.

b. A rock named Nakazone, with a depth of 4½ fathoms over it, situated at a distance of 2½ cables N. 31° E. from the above.

(*Variation 4° Westerly in 1902.*)

This Notice affects the following Admiralty Charts:—Western coast of Kiusiu, &c., No. 358; Nagasaki to Karatsu, No. 359: Hirado no seto to Simonoseki strait, No. 127; Matsu sima to Atsusi no o sima, No. 140: Also, China Sea Directory, vol. IV, 1894, page 532.

E. J. Beaumont, Comdr., R.I.M.,
Port Officer of Calcutta.

Published for general information.

C. B. Bayley,
Asst. Secy., Marine Department.

Calcutta, *the 28th July 1902.*

GOVERNMENT OF BENGAL—MARINE DEPARTMENT.

NOTICE TO MARINERS—No. 232.

[Third Publication.]

AUSTRALIA, SOUTH—Port Adelaide.

Wonga shoal—A gong to be sounded at the light-house.

The President, Marine Board, Port Adelaide, has given notice (No. 10 of 1902) that during the prevalence of fog or mist a Gong will be sounded at the above-named light-house for a period of thirty (30) seconds in duration and at intervals of five (5) minutes.

The sound will be audible in ordinary weather for a distance of about three (3) miles.

This affects Admiralty Plans 1750 and 1752.

E. J. Beaumont, Comdr., R.I.M.,
Port Officer of Calcutta.

Published for general information.

C. B. Bayley,
Asst. Secy., Marine Department.

Calcutta, *the 28th July 1902.*

GOVERNMENT OF BENGAL—MARINE DEPARTMENT.

NOTICE TO MARINERS—No. 233.

[Third Publication.]

AUSTRALIA, SOUTH—Spencer gulf.

Port Pirie approach—Occulting light from a beacon to be erected on the north end of Eastern Shoal.

The President, Marine Board, Port Adelaide, has given notice (No. 11 of 1902) informing Masters of Vessels, Pilots, and others that it is proposed to exhibit, on or about the 1st August next, an Occulting Light from a Beacon to be erected on the North end of Eastern Shoal, and are advised that during the progress of the work, which may be commenced at any time, an ordinary Riding Light will be shown from a vessel moored in the vicinity.

A further notice will be issued giving full particulars at an early date.

This affects Admiralty Chart No. 2389b and Plan 403.

E. J. Beaumont, Comdr., R.I.M.,
Port Officer of Calcutta.

Published for general information.

C. B Bayley,
Asst. Secy., Marine Department.

Calcutta, *the 28th July 1902.*

GOVERNMENT OF BENGAL—MARINE DEPARTMENT.

NOTICE TO MARINERS—No. 234.

[Third Publication.]

INDIA, WEST—Bombay coast.

Bombay harbour—Temporary removal of the Outer light-vessel.

The Bombay Government has given notice (No. 87 of 1902) that the Light-Vessel *Bombay* will be brought in for docking, examination and repairs on the 15th October 1902. During the period she is off her station a Pilot Schooner, anchored in the Light-Vessel's position, will exhibit, in addition to her Anchor Light, two steamer's Masthead Lights, lashed back to back and suspended on a stay between the masts at a height of 56 feet above the water line.

N.B.—In day light, the *Red flag* will be hoisted when a vessel is seen as usual; and the *Blue lights* and *torches* will continue to be burnt as at present.

E. J. Beaumont, Comdr., R.I.M.,
Port Officer of Calcutta.

Published for general information.

C. B. Bayley,
Asst. Secy., Marine Department.

Calcutta, *the 28th July 1902.*

REGISTERED No., C209.] No. 34 of 1902.

SUPPLEMENT TO

The Calcutta Gazette.

WEDNESDAY, AUGUST 20, 1902.

OFFICIAL PAPERS.

[*Non-Subscribers to the* GAZETTE *may receive the* SUPPLEMENT *separately on payment of five rupees per annum if delivered in Calcutta, or seven rupees and eight annas if sent by post.*]

CONTENTS.

	Page
PRELIMINARY Forecast of Sugarcane Crop of Bengal, 1902	1159
Weather and Crop Report for the week ending the 16th August 1902	1165
Meteorological Report of the Province of Bengal for the month of July 1902	1170
Table of Rainfall recorded at stations in Bengal in July 1902	1172
Vital Statistics of Districts and Towns in Bengal for the month of June 1902	1183
CIRCULAR and Eastern Canal for the week ending Saturday the 16th August 1902	1185
Results of the Meteorological Observations taken at the Alipore Observatory from 10th to 16th August 1902 ...	1186
Bengal and North-Western Railway for the month of March 1902	1187
Eastern Bengal State Railway during the month of April 1902	1189
Weekly Return of Traffic Receipts on Indian Railways ...	1191

PRELIMINARY FORECAST OF THE SUGARCANE CROPS OF BENGAL, 1902.

THE following report is published for general information.

W. C. MACPHERSON,
Offg. Secy. to the Govt. of Bengal.

The 19th August 1902.

DEPARTMENT OF LAND RECORDS AND AGRICULTURE, BENGAL.

Preliminary Forecast of the Sugarcane Crop of Bengal, 1902.

Explanatory.—In accordance with the instructions received with Government order No. 144T.—R., dated the 22nd May 1899, an estimate of the raw sugar produced in these provinces from other sources than cane has been included

in this forecast, but the information available on the subject is yet far from complete.

2. *The character of the season.*—In January and February there was little or no rain. The drought which commenced in the middle of September 1901 lasted till the end of February 1902. In March, the weather was generally seasonable, but in April there was excessive rain in East Bengal. May was a seasonable month, though East Bengal again got too much rain. The monsoon was late and the June rainfall was seriously defective except in North and East Bengal. July has been generally a seasonable month. Excessive rain has caused some contraction of area, and has damaged the young plants in parts of North and East Bengal; while a few districts in Bihar, on the other hand, have suffered from drought at the planting season. On the whole, the season has been generally favourable, except in East Bengal and part of Bihar.

3. *Area sown.*—The normal area under sugarcane in this Province is now estimated at 740,200 acres, against 843,400 returned last year, the reduction being mainly due to a revised estimate of the area in the Palamau district. It is estimated that the area planted this year is 716,000 acres, the contraction has been previously explained.

4. *Character of the crop.*—It will be seen from the summary of the district returns appended to this report, that in eleven districts the outturn is expected to reach or exceed the normal, while eleven other districts anticipate an outturn of over 90 per cent. In twelve districts the estimate varies between 80 and 89 per cent., while in the remaining eleven districts crops from 60 to 79 per cent. of the normal are anticipated.

5. *Outturn.*—According to the estimates of the District Officers, the outturn of the crop for the Province as a whole will this year amount to 90 per cent. of a normal crop. But a tendency to underestimate the crop is observable in the important sugarcane-growing districts of East Bengal, and I anticipate that under normal conditions for the rest of the year the provincial outturn will reach 94 per cent. of a normal crop.

C. G. H. ALLEN,

Offg. Director of Land Records and Agriculture, Bengal.

CALCUTTA,

The 11th August 1902.

Preliminary Forecast of the Sugarcane Crop of Bengal, 1902.

Division.	District.	Total area of district, in acres.	Total area estimated to be under cultivation, in acres.	Approximate normal area under sugarcane, in acres.	Approximate area under sugarcane last year (1901), in acres.	Estimated area under sugarcane this year (1902), in acres	Taking 100 to represent the normal outturn, how much represented the outturn last year (1901)?	Taking 100 to represent the normal outturn, how much will represent this year's outturn (1902)?	Remarks by District Officers.	Remarks by the Department of Land Records and Agriculture, Bengal
1	2	3	4	5	6	7	8	9	10	11
Burdwan ...	Burdwan ...	1,726,080	1,284,200	27,400	27,700	27,900	83	81	...	No cause for the low outturn anticipated is stated.
	Birbhum ..	1,121,920	900,000	9,000	9,000	9,000	100	100		
	Bankura ..	1,677,440	642,800	15,000	14,000	13,800	95	100		
	Midnapore	3,292,800	2,180,600	20,400	18,100	17,900	84	77	Excessive rain at the time of cultivation interfered with the progress of sowing The outturn is expected to be considerably below the normal on this account.	
	Hooghly ...	1,067,360	702,300	14,500	14,400	14,300	80	99		
Presidency	24-Parganas ..	1,344,240	1,102,000	4,500	4 800	4,400	107	103		
	Nadia ..	1,788,160	1,303,000	11,400	10,300	7,500	96	75	The normal area has been revised. The decrease in the area and outturn is due to want of seasonable rain.	Rainfall statistics do not bear out the explanation.
	Murshidabad	1,373,440	955,500	14,700	15,000	14,600	82	82	The decrease in area of the sugarcane crop is due to want of rain since first week of June.	No cause is given for the low outturn anticipated.
	Jessore ...	1,879,000	1,142,100	15,000	15,000	12,400	84	68	The decrease in area and outturn is due to excessive rainfall at the time of planting.	

Division.	District.	Total area of district, in acres.	Total area estimated to be under cultivation, in acres.	Approximate normal area under sugarcane, in acres.	Approximate area under sugarcane last year (1901), in acres.	Estimated area under sugarcane this year (1902), in acres.	Taking 100 to represent the normal outturn, how much represented the outturn last year (1901)?	Taking 100 to represent the normal outturn, how much will represent this year's outturn (1902)?	Remarks by District Officers.	Remarks by the Department of Land Records and Agriculture, Bengal.
1	2	3	4	5	6	7	8	9	10	11
Presidency—*concld.*	Khulna ...	3,108,942	870,000	3,100	1,800	1,200	100	100	.....	The cause of the steady decrease in the area occupied by this crop should have been explained.
Rajshahi ...	Rajshahi ...	1,463,040	1,282,100	16,000	15,500	16,00	100	100		
	Dinajpur ...	2,526,080	1,697,600	25,000	30,000	30,000	110	110	Timely rainfall has favoured the growth of sugarcane, and a more than average outturn is expected.	
	Jalpaiguri .	1,894,600	1,075,000	3,100	2,900	2,600	80	80	(1) The decrease in area is due to the low price of molasses this year. (2) Early and heavy rain is likely to affect the outturn.	This explanation is scarcely borne out by the rainfall statistics, which show a moderate excess only.
	Darjeeling ..	744,960	148,000	400	200	200	67	75	..	The cause of the low outturn anticipated is not stated.
	Rangpur ...	2,231,040	1,602,700	24,100	22,800	22,900	100	95	Excessive rainfall in April and May somewhat affected the crop in the Gaibanda subdivision.	
	Bogra ...	869,760	686,000	12,000	12,000	11,000	90	85	Frequent rain caused some injury to the crop hence the decrease in area and outturn.	
	Pabna ...	1,176,960	882,500	66,000	60,000	55,000	100	80	Excessive rainfall has caused a diminution in the area under sugarcane and affected the prospects of its outturn.	

Dacca ...	Dacca .	1,750,480	1,213,500	20,000	19,900	20,000	88	91	The short outturn is due to the excessive rain.	
	Mymensingh	4,052,480	2,405,760	35,000	33,600	34,000	95	85		I shall ask the Collector to explain the cause of the low outturn anticipated.
	Faridpur ...	1,460,480	1,007,500	42,000	40,000	35,000	100	75	The cultivation of sugarcane is gradually decreasing in this district. The decrease in outturn is due to excessive rainfall.	
	Backerganj ...	3,335,360	1,408,000	20,000	20,000	20,000	100	80	The outturn is expected to be below normal owing to heavy rainfall at the sowing season. The area sown with sugarcane remains normal.	
Chittagong ...	Tippera ..	1,534,880	1,179,800	15,900	14,700	13,700	82	63	The decrease in the outturn and in the area under the crop is due to unseasonable and excessive rain.	
	Noakhali ...	1,052,800	818,800	900	600	600	80	70	The decrease in the outturn is due to excessive rainfall.	
	Chittagong ...	1,594,815	559,800	9,200	9,000	9,000	75	80	The decrease in the outturn is due to heavy rainfall at the time of planting.	
Patna ...	Patna ...	1,332,560	983,500	5,400	3,700	5,200	93	94	The figures in columns 5 and 6 have been revised according to thana units. Prospects at first favourable, but the continued drought is discounting everything.	
	Gaya ...	3,015,680	2,207,500	29,000	31,200	29,500	95	96		
	Shahabad	2,795,520	1,841,800	36,000	40,000	41,000	80	80	The reduced outturn is due to want of rain.	
	Saran ...	1,696,087	1,284,000	36,500	36,500	46,800	88	95	The figures in columns 3 and 4 have been revised according to survey records.	
	Champaran ...	2,079,815	1,447,700	10,800	11,400	9,900	75	90	The decrease in the area and outturn is due to insufficiency of rain.	
	Muzaffarpur	1,941,254	1,627,000	8,800	9,700	9,300	75	75	.....	The cause of the low outturn has not been explained.
	Darbhanga ...	2,134,400	1,520,700	17,000	16,000	15,100	83	99	The figures in columns 3 to 5 have been revised according to the settlement figures. There is a decrease in column 7 due to drought in the Madhubani subdivision.	
Bhagalpur	Monghyr ...	2,509,440	1,582,800	6,800	6,600	6,600	53	79	The low outturn is due to the insufficient and untimely rainfall.	
	Bhagalpur ...	2,704,640	2,097,000	63,700	63,700	63,700	112	117	—	

Division.	District.	Total area of district, in acres.	Total area estimated to be under cultivation, in acres.	Approximate normal area under sugarcane, in acres.	Approximate area under sugarcane last year (1901), in acres.	Estimated area under sugarcane this year (1902), in acres.	Taking 100 to represent the normal outturn, how much represented the outturn last year (1901)?	Taking 100 to represent the normal outturn, how much will represent this year's outturn (1902)?	Remarks by District Officers.	Remarks by the Department of Land Records and Agriculture, Bengal.
1	2	3	4	5	6	7	8	9	10	11
Bhagalpur—*concld.*	Purnea .	3,195,520	1,639,900	9,500	9,000	9,000	87	86	.	The low outturn has not been explained.
	Malda .	1,216,000	672,800	5,000	3,000	3,900	75	100		
	Sonthal Parganas	3,500,160	1,725,100	17,000	18,000	18,000	111	106	The season is favourable for sugarcane cultivation.	
Orissa ...	Cuttack ...	2,323,200	1,161,200	5,000	4,500	4,600	75	93	The estimated outturn is below the normal owing to insufficient rainfall which retards the growth of sugarcane	
	Balasore ...	1,334,368	870 900	4,400	2,000	2,000	95	109	.	The cause of the decrease in area should have been explained.
	Angul ...	1,075,840	280,000	2,300	2,300	2,300	63	75	.	The cause of the low outturn should be reported in the final forecast.
	Puri .	1,599,640	738,280	3,500	2,700	2,700	82	90		
Chota Nagpur.	Hazaribagh ...	4,493,440	2,213,210	35,600	33,300	35,600	97	94		
	Ranchi ...	4,569,600	2,354,200	300	200	300	75	75	The figures in column 5 have been revised after further enquiry The decrease in the outturn is due to want of rain at the time of planting.	
	Palamau ..	3,139,200	768,000	4,200	4,800	4,500	100	85	The successive bad rice crops have caused land which would otherwise have been put under rice to be planted with sugarcane. The normal area has been revised in accordance with Mr. Sunder's Settlement Report.	The cause of the low outturn should have been explained.
	Manbhum ..	3,654,080	1,419,200	12,300	12,150	11,300	100	84	The figures in columns 5 and 6 have been revised.	Ditto ditto.
	Singhbhum ...	2,526,019	838,800	1,000	1,000	1,000	93	100		
	Total ...	36,231,960	57,206,800	740,200	717,500	716,600	93	94*		* Estimated by this Department.

WEATHER AND CROP REPORT.

For the week ending on the 18th August 1902.

Burdwan.—Rainfall at Sadar 0·35, Kalna 2·07, Katwa 2·83, Raniganj 2 52. Weather showery but more rain wanted. Transplantation going on. Fodder and water sufficient. Condition of cattle good. Common rice sells at 10½ seers per rupee.

Birbhum.—Rainfall at Sadar 3 22, Rampur Hât 6·76. Weather cloudy. Transplantation continued with better prospects. Sugarcane promising. Fodder sufficient. Common rice sells at 12 seers per rupee.

Bankura.—Rainfall at Sadar ·82. More rain wanted. Condition of paddy crops backward. Sugarcane doing well. Fodder and water sufficient. Common rice sells at 12 seers per rupee.

Midnapore.—Rainfall at Sadar 1·21, Contai 2·79, Tamluk 0·41, Ghatal 3·24. Weather hot and cloudy. *Aman* transplantation going on smoothly. About 80 per cent. finished in Contai and Ghatal subdivisions, 85 per cent. in Tamluk. More rain wanted. *Aus*, jute, hemp and sugarcane doing well. Jute being cut in Contai and Tamluk. Cattle-disease reported from thana Binpur. Fodder and water sufficient. Common rice sells as follows :—

		Srs.	ch.	
Sadar	... ...	12	0	per rupee.
Contai	... ...	11	0	
Ghatal	... ...	11	0	
Tamluk	... ...	11	12	

Hooghly.—Rainfall at Sadar 1·82, Serampore 4·06, Arambagh 1·34. Transplantation of *aman* continues. Fodder and water sufficient. Price of common rice stationary. Prospect of standing crops good.

Howrah.—Rainfall at Sadar 2·48, Ulubaria 1·16. Fall general on the 11th and 12th. It was recorded at Ulubaria also on the 13th and at Sadar on the 16th Transplantation of *aman* paddy still going on. Agricultural prospects in general hopeful. No cattle-disease. Fodder and water-supply sufficient. Average price of common rice is 11 seers throughout the district.

24-Parganas.—Rainfall at Sadar 0·97, Barasat 2·36, Basirhat 3·85, Diamond Harbour 0·84. Weather very hot, occasional local showers. State of standing crops good, but more rain is wanted in all the subdivisions, especially Diamond Harbour. Prospect fair. *Aus* and jute being harvested and steeped. Transplantation of *aman* continues. Common rice sells at 11½ seers per rupee; at Diamond Harbour 10½ seers. Condition of cattle good. Supply of fodder and water sufficient.

Nadia.—Rainfall at Chuadanga 2·21, Ranaghat 2·62, Meherpur 2·30, Kushtia 4·27. Fall insufficient in Sadar. Weather hot. Harvesting of *aus* paddy and transplantation of *aman* paddy going on. Jute growing up well, being steeped. Fodder and water sufficient. No cattle-disease. Common rice sells as follows :—

		Srs	ch	
Sadar	... ...	12	0	per rupee.
Ranaghat	... ...	11	0	
Chuadanga	... ...	10	0	
Meherpur	... ...	13	8	
Kushtia	... ...	11	4	

Murshidabad.—Rainfall at Sadar 5·71, Kandi 8·51, Jangipur 5·92, Lalbagh 7·10. Weather seasonable. Transplantation of *aman* continues. Harvesting of *bhadoi* going on. Jute being cut and steeped in Jangipur subdivision. Prospect of sugarcane and jute good. No cattle-disease. Fodder and water sufficient. Common rice sells as follows :—

		Srs.	ch.	
Sadar	... ...	11	8	per rupee.
Kandi	... ...	12	0	
Jangipur	... ...	12	0	
Lalbagh	... ...	11	0	

Jessore.—Rainfall at Sadar 0·88, Jhenida 5·46, Magura 5·91, Narail 3·04, Bangaon 2·05. Weather seasonable. More rain wanted in Sadar. Prospects of crops generally fair. *Aus* being harvested Fodder and water sufficient. Cattle-disease reported from Salkhia outpost in Magura subdivision. Common rice sells as follows:—

	Srs.	ch.	
Sadar	12	0	per rupee.
Jhenida	12	0	
Bangaon	12	0	
Narail	10	12	
Magura	13	0	

Khulna.—Rainfall at Sadar 4·00, Bagerhat 6·41, Satkhira 6·53. Weather seasonable. Transplantation of *aman* and harvesting of *aus* continue. Prospects favourable. Fodder and water sufficient. Cattle-disease reported from Paikgachha and Asasuni. Common rice sells as follows:—

	Srs.	ch.	
Sadar	11	5	per rupee
Bagerhat	12	0	
Satkhira	10	8	

Rajshahi.—Rainfall at Sadar 6·06, Nator 7·31, Naugaon 8·23. Weather seasonable. Prospects of standing crops good. Transplantation of *aman* and harvesting of *bhadoi* and jute going on. Common rice selling at 12 seers per rupee.

Dinajpur.—Rainfall at Sadar 7·87. Fall in the district general, varying from 5·38 to 11·80. Weather seasonable. Standing crops good. Steeping of jute and transplantation of winter rice are in full swing. *Bhadoi* is being reaped. No cattle-disease. Fodder and drinking-water plentiful. Rice selling at 11 seers per rupee.

Jalpaiguri.—Rainfall at Sadar 9·32, Alipore Duars 19·15. Weather rainy with occasional high winds. Transplantation of *haimanti* and harvesting of *bhadoi* paddy going on. Common rice sells at 11 seers a rupee. Fodder and water sufficient. Cattle-disease reported from two thanas in Sadar subdivision.

Darjeeling.—Rainfall at Sadar 3·39, Kurseong 17·53, Siliguri 13·09. Weather seasonable. *Hills*—Maize being harvested, *chota* and *bara marua*, *bhadoi* and *haimanti dhan* doing well. *Terai*—Transplanting of *haimanti* paddy and reaping of jute going on. Coarse rice sells as follows:—

	Srs.	ch.	
Hills	8	0	per rupee.
Terai	11	0	

Maize sells at Darjeeling at 18 seers and at Kalimpong at 25 seers per rupee.

Rangpur.—Rainfall at Sadar 8·02. Fall heavy, excessive at Kurigram, 14·73. Prospect of the standing crops is fair. Weather cloudy and rainy. More rain is expected Gaibanda is reported to be over flooded. No loss of life or property reported. Damage to crop is apprehended. Transplantation of *aman* and cutting of jute at Kurigram retarded by heavy rain. Progress at Sadar and Nilphamari good. Common rice sells at Sadar at 10½ seers per rupee.

Bogra.—Rainfall at Sadar 13·82 Fall general. Weather hot and cloudy. Cutting of *aus* and jute and transplantation of *aman* going on. Prospects fair. Fodder and water sufficient. Common rice sells at 12 seers per rupee.

Pabna.—Rainfall at Sadar 1·42, Sirajganj 5·11. Fall general. Weather rainy and hot. Harvesting of *aus* nearly over and that of jute being continued. Prospects of standing crops fair. Fodder and water sufficient. No cattle-disease. Common rice sells at 10 seers per rupee.

Dacca.—Rainfall at Sadar 4·25, Manikganj 3·96, Munshiganj 4·81, Narayanganj 5·44. Prospects of crops fair. Weather seasonable. Fodder available. No cattle-disease. Common rice sells at 11 seers per rupee.

Mymensingh.—Rainfall at Sadar 5·68, Jamalpur 9·68, Kishorganj 4·34, Netrokona 13·55, Tangail 4·20. Weather seasonable. Harvesting of *aus* and jute and transplantation of *aman* continue. Outturn of jute estimated at 50 per cent. Nearly 75 per cent. of normal area transplanted with *aman*. Fodder and water sufficient. No cattle-disease. Common rice selling as follows:—

	Srs.	ch.	
Sadar	10	0	per rupee.
Kishorganj	10	8	
Jamalpur	13	4	
Netrokona	11	12	
Tangail	10	4	

Faridpur.—Rainfall at Sadar 5·43, Goalundo 3·85, Madaripur 3·33. Weather very wet. State and prospects of crops good. Fodder sufficient. No cattle-disease. Common rice sells at 11 seers a rupee.

Backergunge.—Rainfall at Sadar 2·12. Fall general, heaviest at Patuakhali, 7·23. Weather seasonable. Transplantation of *aman* continues. Cattle-disease at Matbari thana. Fodder and water sufficient. Common rice sells at 11 seers (*aman*) and 14 seers (*aus*) per rupee.

Tippera.—Rainfall at Sadar 3·50, Brahmanbaria 5·66, Chandpur 3·10. Weather seasonable. Prospects of standing crops good. The harvesting of *aus* paddy and jute, and transplantation of *aman* continues. Fodder and water sufficient. No cattle-disease. Common rice sells at 12 seers per rupee.

Noakhali.—Rainfall at Sadar 5·25, Feni 6·67. Fall general. Weather seasonable. Transplantation of *aman* continues. *Aus* being harvested. Fodder and water sufficient. Cattle-disease at Sundip. Common rice sells at Sadar at 11 seers and at Feni at 13 seers per rupee.

Chittagong.—Rainfall at Sadar 3·95, Cox's Bazar 9·32. Transplantation of *aman* crops going on. Common rice selling at 12 seers 14 chitaks per rupee. Fodder and water sufficient.

Chittagong Hill Tracts.—Rainfall at Sadar 2·43. Fall general. Weather fine with occasional showers. *Joom* paddy crop about average. Transplantation of *aman* paddy continues. No cattle-disease. Common rice sells at 11 seers per rupee.

Patna.—Rainfall at Sadar 0·39, Barh 1·29, Bihar 0·38, Dinapore 0·47, Bikram 0·45, Hilsa 0·85. Weather hot and cloudy. Rain urgently wanted. Prospects of Indian-corn good. Transplantation of paddy going on in low lands. No cattle-disease. Fodder and water sufficient. Common rice sells as follows :—

	Srs.	ch.	
Patna	11	4	per rupee.
Barh	11	4	
Bihar	10	0	
Dinapore	12	8	

Gaya.—Rainfall at Nawadah 0·43, Jahanabad 0·59, Aurangabad 0·97. Weather hot and rainy. Sugarcane and *bhadoi* doing well. Transplantation of paddy going on, but retarded for want of sufficient rain in places. Fodder and water for cattle ample. Average price of common rice 10 seers 10 chitaks per rupee.

Shahabad.—Rainfall at Sadar 0·93, Buxar 0·70, Bhabhua 0·16, Dehri 0·02. Weather hot. Paddy being transplanted, *Bhadoi* and sugarcane doing well. Fodder and water sufficient. No cattle-disease. Rice sells at Sadar at 11 seers a rupee.

Saran.—Rainfall at Sadar 0·16, Siwan and Gopalganj nil. Weather seasonable but very hot. *Bhadoi* crops being weeded. Transplantation of paddy continues, but more rain wanted. Fodder and water sufficient. No cattle-disease. Common rice sells at 12 seers per rupee.

Champaran.—Rainfall at Sadar 5·05, Bettiah 4·85. Weather hot and cloudy. Transplantation of winter rice approaching completion. Harvesting of *bhadoi* commenced. Prospects of standing crop very good. Cattle-disease reported. Fodder and water sufficient. Common rice sells at 13½ seers and maize at 22 seers per rupee.

Muzaffarpur.—Rainfall at Sadar ·44, Hajipur .95, Sitamarhi 1·62. Rainfall on 12th to 14th at Sitamarhi not recorded, rain-gauge being under flood water. Weather hot and cloudy occasionally. Transplantation of paddy still going on, and prospects fair except in Sitamarhi subdivision, where Bagmati flood damaged crops considerably, and swept away many cattle; elsewhere fodder and water sufficient. Prices are—Common rice 11⅛ seers and maize 20½ seers a rupee.

Darbhanga.—Rainfall at Sadar 2·85, Samastipur 0·78, Madhubani 5 30. Weather hot and cloudy. Transplantation of paddy in progress. Heavy flood came down from Nepal Terai, and has inundated portions of country near rivers. It is slowly subsiding. Loss to *bhadoi* is feared in places. Fodder and water sufficient. Cattle-disease reported from Warisnagar thana. Common rice sells as follows :—

	Srs.	ch.	
Sadar	12	9	per rupee.
Samastipur	12	0	
Madhubani	11	11	

Monghyr.—Rainfall at Sadar 1·33, Begusarai 1·69, Jamui 1·98. Weather hot and occasionally cloudy. Transplantation of paddy continues. *China* being harvested. Prospects of standing crops good. No cattle-disease. Fodder and water sufficient. Common rice sells at 11 seers per rupee.

Bhagalpur.—Rainfall at Sadar 0·18, Banka 1·64, Madhipura 4·10, Supaul 6·12. Weather hot and cloudy. Transplantation of *aghani* paddy nearly complete. Standing crops doing well. Harvesting of *marua* continues. More rain wanted in Banka. Sporadic cases of cattle-disease reported. Water and fodder sufficient. Floods have occurred in North Bhagalpur, but no damage to crops is reported. Common rice sells as follows:—

	Srs. ch.	
Sadar	11 6	per rupee.
Banka	11 14	
Madhipura	13 8	
Supaul	14 0	

Purnea.—Rainfall at Sadar 1·48, Kishanganj 8·57, Araria 10·61. Fall general, heavier towards the north. River Kossy and Mohananda in flood. *Bhadoi dhan* and jute are being harvested. The crops are average. Winter crops progressing. No cattle-disease. Fodder and water sufficient. Common rice sells as follows:—

	Srs. ch.	
Sadar	11 0	per rupee.
Kishanganj	11 8	
Araria	13 0	

Malda.—Rainfall at Sadar 4·83, Chanchal 6·84, Sibganj 1·74, Gajol 4·43. Fall general. Weather rainy and cloudy. Harvesting of *bhadoi* nearly finished. Transplantation of winter rice approaching completion. Cutting of jute still going on. Cattle-pox reported from Tulsihatta thana. Fodder and water sufficient. Common rice sells at 10 seers per rupee.

Sonthal Parganas.—Rainfall at Sadar 4·42, Deoghur 1·32, Godda 1·83, Jamtara 1·78, Pakaur 5·20, Rajmahal 3·37. Weather hot with occasional showers. The extent of paddy transplantation was nearly fourteen annas. The outturn of *makai* is expected to be good except at Jamtara. Fodder and water sufficient. Rice sells at 11¾ seers per rupee in the Sadar.

Cuttack.—Rainfall at Sadar 2·92. Fall general. Weather hot and cloudy. Transplantation and reploughing of *sarad* going on. Early *beali* in maturity but slightly damaged in places by insects. Late *beali* doing well. Prospects on the whole fair. Slight cattle-disease in parts. Fodder and water sufficient. Common rice sells at 13 seers 2 chitaks per rupee at Sadar.

Balasore.—Rainfall at Sadar 1·10. Fall general. Transplantation, weeding and puddling going on. Prospects good. Sugarcane, oilseeds, jute and cotton thriving. Rice sells at 13 and 16 seers per rupee at Sadar and at Bhadrak respectively. Floods in Chandbally has done little damage. Fodder and water sufficient. Some damage done in Bhograi pargana by excess rainfall.

Angul.—Rainfall at Sadar 1·58, Chhendipada 1·27, Bissipara 3·63. Weather hot and cloudy. Puddling and weeding of winter paddy in progress. Common rice sells at 11¼ seers per rupee.

Puri.—Rainfall 6·04; it is general throughout the district and favourable to standing crops. *Bhadoi* paddy and *mundua* in ears. Weeding, puddling and transplantation of winter paddy in progress. *Bhadoi* crop expected to be bumper. Other miscellaneous crops doing well. Common rice sells at 14 seers 7 chitaks per rupee. Cattle-disease prevailing at places.

Hazaribagh.—Rainfall at Sadar 0·03. Giridih 3·68. Fall not general. Weather hot and cloudy. Sugarcane doing well. Prospect of *bhadoi* fair. Cattle-disease reported from three thanas. Fodder and water sufficient. Common rice sells at 12 seers per rupee.

Ranchi.—Rainfall 0·09. Weather bright and hot, more rain wanted. Harvesting of *gundli* continues. Cattle-disease reported from several thanas. Fodder and water sufficient. Average price of common rice is 13¾ seers per rupee.

Palamau.—No rain. Weather not seasonable. Rain urgently wanted. *Bhadoi* still doing fairly well. Transplantation of winter paddy continues. Fodder and water sufficient. No cattle-disease. Rice sells at Sadar at 10 seers 6 chitaks per rupee.

Manbhum.—Rainfall at Sadar 1·80, Gobindpur 2·13. Fall not general. Weather seasonable on the whole. More rain wanted. Prospects of crops on ground good. Transplantation of winter rice continues. Fodder and water sufficient. Cattle-disease reported from Rajganj outpost. Average price of common rice is at Sadar 12 seers and at Gobindpur 11 seers per rupee.

Singhbhum.—Rainfall 0 28. Transplantation finished. Standing crops promising. Average price of rice at Sadar is 11 seers per rupee.

General Summary.—Rain fell early in the week in every district except Palamau. The fall in parts of North Bengal was excessive and elsewhere was moderately heavy. The districts of Bihar, Chota Nagpur, and the Burdwan and Presidency Divisions generally require more rain. In Sitamarhi subdivision of the Muzaffarpur district considerable damage has been done to crops, cattle and houses by floods. Floods are also reported in North Darbhanga, North Bhagalpur, and Rangpur. Harvesting of jute and early rice continues. Transplantation of winter rice is going on. Standing crops generally doing fairly. Cattle-disease reported from 15 districts. Fodder and water adequate. The price of common rice has risen in 11 districts, fallen in 9, and is stationary in the rest.

By order of the Lieutenant-Governor of Bengal,

W. C. MACPHERSON,

Offg. Secretary to the Govt. of Bengal.

REVENUE DEPARTMENT,

The 19th August 1902.

Meteorological Report of the Province of

STATION OBSERVATIONS.

Meteorological Division.	Division.	District.	Representative stations.	Air Pressure. Highest, 8 A.M., barometer reading.	Air Pressure. Lowest, 3 A.M., barometer reading.	Air Pressure. Mean, 9 A.M., reduced to 32°.	Air Pressure. Mean reduced to sea-level and constant gravity, Lat. 45°.	Air Pressure. Variation from normal mean.	Wind. Mean direction at 8 A.M.	Wind. Mean velocity in miles daily.	Temperatures. Highest of month.	Temperatures. Lowest of month.	Temperatures. Mean daily maximum temperature.	Temperatures. Mean daily minimum temperature.	Temperatures. Mean daily temperature.	Temperatures. Variation from normal mean.
South-West Bengal.	Burdwan	Burdwan	Burdwan	29·659	29·168	29·463	29·514	−·021	S4°E	104	96·4	75·8	89·8	78·7	84·3	−0·4
			Raniganj	29·426	28·926	29·227	29·508	—	S63°E	35	95·2	74·9	89·9	78·0	84·0	−0·2
		Birbhum	.....													
		Bankura	Bankura	29·481	28·920	29·242	29·488	—	S61°E	97	95·0	74·9	90·5	78·5	84·5	+0·6
		Midnapore	Midnapore	29·588	29·102	29·419	29·514	−·026	S3°E	93	94·3	74·7	89·4	78·1	83·7	−0·3
		Hooghly	.....													
		Howrah	.....													
	Presidency	24-Parganas	Saugor Island	29·724	29·263	29·546	29·515	−·017	S21°W	493	91·4	76·6	88·2	80·7	84·4	+0·3
		Calcutta	Calcutta	29·739	29·262	29·554	29·521	−·015	S7°W	132	93·2	75·1	88·2	78·3	83·3	0
		Nadia	Krishnagar	29·733	29·254	29·530 (a)	29·525 (a)	—	S20°E	109	93·3	74·2	88·8	78·0 (a)	83·5 (a)	−0·5
		Murshidabad	Berhampore	29·715	29·255	29·504	29·519	−·025	S21°E	97	94·3	75·3	89·4	78·6	84·0	−0·1
		Jessore	Jessore	29·740	29·294	29·549	29·529	−·023	S34°E	43	92·5	75·2	87·9	78·7	83·3	−0·8
		Khulna	.....													
North Bengal.	Rajshahi	Rajshahi	Rampur Boalia	29·722	29·275	29·514	29·533	−·009	S21°E	66	93·1	74·1	87·9	78·7	83·4	−0·3
		Dinajpur	Dinajpur	29·665	29·248	29·446	29·523	−·030	S62°E	115	94·3	74·5	88·6	78·1	83·4	−0·7
		Jalpaiguri	Jalpaiguri	29·536	29·128	29·324	29·565	−·006	N78°E	52	93·9	73·6	87·6	77·1	82·4	−0·2
		Darjeeling	Darjeeling	22·985	22·784	22·888	—	−·025	N56°E	85	71·7	54·6	66·0	57·5	61·8	−0·1
		Cooch Behar	Cooch Behar	29·675	29·251	29·457	29·567	—	S87°E	80	94·4	75·1	88·4	77·9 (b)	83·2 (b)	—
		Rangpur	Rangpur	29·700	29·291	29·490	29·567	+·002	S59°E	86	95·2	73·8	89·0	78·4	83·8	−0·1
		Bogra	Bogra	29·731	29·323	29·522	29·535	−·012	S77°E	101	92·2	73·2	88·3	78·3	83·4	−0·5
		Pabna	Sirajganj	29·757	29·344	29·548	29·547	−·018	S67°E	73	91·3	73·2	86·4	77·9	82·2	−1·0
East Bengal.	Dacca	Dacca	Narayanganj	29·780	29·359	29·586	29·560	−·013	S32°E	218	91·1	75·2	87·0	78·8	82·9	−0·9
		Mymensingh	Mymensingh	29·755	29·350	29·551	29·561	−·018	S45°E	80	91·2	74·0	86·5	78·0	82·3	−0·5
		Faridpur	Faridpur	29·756	29·338	29·559	29·553	−·033	S20°E	111	90·8	73·9	87·0	78·4	82·7	−0·8
		Backergunge	Barisal	29·763	29·333	29·579	29·537	−·026	S5°E	94	90·8	74·1	86·7	78·0	82·4	−0·6
	Chittagong	Tippera	Comilla	29·771	29·371	29·596	29·479	—	S31°E	86	92·3	71·8	87·0	76·7	81·9	−0·2
		Noakhali	Noakhali	29·751	29·330	29·579	29·509	—	S30°E	141	88·7	71·9	85·2	77·1	81·2	−0·2
		Chittagong	Chittagong	29·731	29·300	29·556	29·490	−·022	S34°E	228	90·0	74·6	84·7	76·1	80·4	−0·8
		Chittagong Hill Tracts	.....													
Bihar.	Patna	Patna	Bankipore	29·553	29·191	29·362	29·496	−·028	S82°E	195	98·0	76·2	91·4	70·3	86·4	+0·4
		Gaya	Gaya	29·345	28·961	29·162	29 487	−·032	S34°E	70	107·3	73·8	93·6	78·6	86·1	+1·0
		Shahabad	Dehri	29·343	29·014	29·179	29 483	−·033	S29°E	148	109·4	67·0	91·9	78·7	85·3	+0·9
			Buxar	29·454	29·107	29·289	29·481	−·032	S70°E	208	106·5	72·6	90·8	78·1	84·4	+0·2
			Arrah	29·550	29·191	29·363	29 502	—	N80°E	82	101·5	74·1	91·9	79·0	85·5	+0·7
		Saran	Chapra	29·552	29·191	29·359	29·492	—	S85°E	82	100·4	74·1	92·9	79·3	86·1	+1·2
		Champaran	Motihari	29·557	29·168	29 331	29·512	—	N87°E	146	97·9	72·8	90·5	78·0	84·3	−0·1
		Muzaffarpur	Muzaffarpur	29·589	29·208	29·380	29 511	—	S73°E	127	90 2	74·7	89·5	78·8	84·2	—
		Darbhanga	Darbhanga	29·607	29·227	29 3.0	29 509	−·026	S71°E	91	96·3	77·0	89·6	79·7	84·7	0
	Bhagalpur	Monghyr	.....													
		Bhagalpur	Bhagalpur	29·613	29·197	29·396	29·508	−·006	S62°E	103	95·7	74 6	90·4	78·8 (d)	84·6 (d)	+0·5
		Purnea	Purnea	29·675	29·267	29·447	29 525	−·022	S75°E	99	94·2	75·2	89 8	78·8	84 2	−0·1
		Malda	Malda	29·701	29·281	29·479	29·502	—	S56°E	61	93·6	74·0	89·0	78·5	83·7	−0·8
		Santhal Parganas	Naya Dumka	29·290	28·804	29·072	29·516	−·012	S48°E	104	94·0	74·4	88·5	77·6	83·2	+0·2
Orissa.	Orissa	Cuttack	Cuttack	29·635	29·202	29 517	29·539	−·004	S61°W	82	96·0	74·2	90·4	78·1	84·3	+0·1
			False Point	29·700	29·240	29·580	29·543	−·007	S52°W	279	92·0	73·1	87·4	78·9	83·2	+0·1
		Balasore	Balasore	29·682	29·238	29·536	29·528	−·004	S30°W	129	95·9	71·4	89·2	77·9	83·6	+0·1
		Puri	Puri	29·690	29·259	29·584	29 540	—	S49°W	334	90·7	72·6	86·3	78·5	82·4	—
			Gopalpur	29·694	29·293	29·588	29·540	−·002	S38°W	449	90·6	72·1	86·7	78·1	82·4	−0·9
Chota Nagpur.	Chota Nagpur.	Hazaribagh	Hazaribagh	27·730	27·324	27·565	29·503	−·020	S46°W	200	100·7	73·3	86·6	74·2	80·5	+1·3
		Ranchi	Ranchi	27·612	27·192	27·448	29·505	−·024	S57°W	336	101·2	68·9	85·3	73·2	79·3	+0·6
		Palamau	Daltonganj	28·960	28 603	28·815	29·493	—	N45°E	74	110·1	75·0	91·9	78·7	85·3	—
		Manbhum	Purulia	28·917	28·405	28·733	29·458	—	S53°W	53	99·1	71·9	90·2	76·1	83·2	—
		Singhbhum	Chaibassa	28·951	28·481	28·796	29·500	−·015	S30°W	44	103·7	75·0	88·7	77·1	82·9	−0·7
Assam.	.....	Dibrugarh	Dibrugarh	29·471	29·130	29·291	29·503	—	N9°W	50	94·2	71·5	87·3	74·8	81·1	—
		Sibsagar	Sibsagar	29·486	29·130	29·306	29·504	−·026	S27°W	97	93·2	75·0	88 6	77·5	83·1	−0·9
		Tezpur	Tezpur	29·558	29·202	29·380	29·502	—	N45°W	74	93·6	74·9	89·3	77·4	83·4	—
		Goalpara	Dhubri	29·703	29·295	29·498	29·568	−·011	S70°E	133	90·2	74·8	86·1	78·0	82·1	−0·1
		Cachar	Silchar	29·740	29·335	29·556	29 611	−·012	Calm	58	98·1	74·3	90·4	77·6	84·0	+0·3
		Khasi and Jaintia Hills	Shillong	25·105	24·838	24·978	—	—	?	?	80·6	59·5	75 3	64·7	70·0	—
			Cherrapunji	25·660	25·364	25·517	—	—	?	?	80·8	62·5	71·9	64·9	68·4	—

(b) Mean of 25 days. | (a) Mean of 30 days.

Bengal for the month of July 1902.

Humidity.		Cloud.		Rainfall.	District Observations.										District.
					Rainfall—										
					Of month.					Since 16th of May 1902.					
Mean, 8 A.M.	Variation from normal mean.	Mean cloud amount, 8 A.M.	Variation from normal mean, 8 A.M.	Rainfall.	Mean of district.	Normal mean.	Variation from mean.	Number of rainy days.	Normal mean number of rainy days.	Mean of district	Normal mean.	Variation.	Mean number of rainy days.	Normal mean number of rainy days.	
89	+4	9·0	+0·5	9·50	10·84	12·25	—1·41	14·80	15·46	19·02	25·37	—5·75	26·00	30·63	Burdwan.
91	—	6·7	—	12·59	17·76	13·49	+4·27	16·50	16·10	24·84	27·57	—2·73	31·33	31·67	Birbhum.
88	—	8·1	—	13·62	9·01	12·22	—3·21	15·40	15·52	14·84	25·80	—10·96	22·20	30·54	Bankura.
89	—	5·5	—	13·00	16·01	12·51	+4·40	16·88	14·79	22·87	25·72	—2·85	28·01	30·06	Midnapore.
					11·58	12·05	—0·47	16·00	16·40	23·22	25·48	—3·26	33·34	32·37	Hooghly.
					15·00	11·53	+3·56	16·00	17·03	24·16	25·33	—1·17	30·00	33·88	Howrah.
87	—3	8·7	+0·4	23·74	12·81	13·00	—0·19	15·14	16·64	23·11	26·89	—3·78	25·71	33·18	24-Parganas.
88	+1	9 0	—0·7	15·52	15·52	12·31	+3·21	16·00	16·96	26·12	26·30	—0·18	32·00	35·52	Calcutta.
90	—	8·0	—	9·51	8·72	10·36	—1·64	17·80	15·47	22·34	24·06	—1·82	34·80	32·63	Nadia.
91 (a)	+5	8·9 (a)	—0·3	16·07	14·98	10·93	+4·05	17·32	15·31	26·25	24·31	+1·94	35·09	31·42	Murshidabad.
90	—1	8·6	—0·6	15·25	10·47	10·64	—0·17	20·40	16·08	25·37	26·10	—0·73	39·40	34·40	Jessore.
					16·62	13·10	+3·52	18·40	17·60	30·90	29·34	+1·56	34·60	30·10	Khulna.
89	—	6·6	—	10·28	13·62	11·81	+0·81	18·50	15·20	30·81	26·07	+4·74	33·50	31·88	Rajshahi.
91	—	9·1	—	21·64	21·95	16·17	+5·78	17·60	16·74	37·56	33·82	+3·74	34·00	33·51	Dinajpur.
92	—	3·8	—	23·04	33·81	33·22	—0·41	23·33	20·99	66·91	68·86	—1·95	49·90	46·60	Jalpaiguri.
96	+2	8·5 (c)	—0·3	35·82	35·65	31·91	+3·74	24·83	24 74	61·24	60·20	+1·04	52·16	51·22	Darjeeling.
91	—	8·3	—	38·68	33·04	23·85	+0·19	20·00	18·23	66·52	60·47	+6·05	44·60	44·14	Cooch Behar.
90	—	5·8	—	16·43	14·44	14·81	—0·37	17·12	14·58	37·68	38·42	—0·54	41·12	34·95	Rangpur.
89	—	7·8	—	13·08	14·74	13·26	+1·48	19·25	15·77	33·42	30·91	+5·51	30·25	34·48	Bogra.
93	—	8·3	—	11·13	9·63	11·06	—1·43	19·00	15·30	35·37	26·99	+8·38	40·00	33·99	Pabna.
91	+2	9·0	+1·1	13·04	12·85	12·95	—0·10	17·40	17·45	40·85	31·12	+9·73	42·80	38·01	Dacca.
90	—	7·6	—	17·50	21·86	16·47	+5·39	18·88	17·51	51·54	41·27	+10·27	44·38	30·30	Mymensingh.
90	—	5·8	—	13·72	13·62	11·72	+1·90	16·33	16·43	38·40	28·66	+9·74	45·00	36·00	Faridpur.
90	—	8·2	—	24·99	29·18	17·45	+11·73	23·00	20·59	63·18	39·73	+23·45	45·57	42·22	Backergunge.
90	—	7·2	—	11·08	12·01	13·39	—1·38	17·13	16·43	39·45	33·68	+5·78	40·15	36·70	Tippera.
90	—	6·4	—	40·14	31·97	24·01	+7·96	24·50	21·68	64·71	52·37	+12·34	50 50	44·63	Noakhali.
89	+1	8 3	+0·4	35·57	33·31	26·16	+9·15	23·86	20 68	69·02	56·87	+12·15	51·58	44 25	Chittagong.
					21·17	19·15	+2·02	25·00	21·59	52·45	46·14	+6·31	54·00	46·88	Chittagong Hill Tracts.
88	+6	8·2	—0·1	10·62	11·42	12·40	—0·98	14·83	14·37	15·10	21·28	—0·18	20·17	23·69	Patna.
84	+4	6·8	—2·2	16·77	14·42	12·40	+2·02	17·67	14·19	17·42	19 76	—2·34	22 67	22·80	Gaya.
83	—	7·9	—	16·10											
87	—	7·9	—	14·30	16·89	12·72	+4·17	17·08	13·90	19·62	19·48	+0·14	20·62	22 58	Shahabad.
86	—	6·7	—	16·12											
85	—	8·9	—	5·65	10·57	11·77	—1·20	15·00	13 34	13·48	20·48	—7·00	20 00	22·28	Saran.
88	—	6 1	—	22·70	18·41	13·72	+4·69	12·25	13·83	24·76	24·63	+0·13	21·50	25·72	Champaran.
89	—	5·4	—	15·85	12 37	12·03	+0·34	12·00	13·03	17·04	20·88	—2·94	19·14	22·98	Muzaffarpur.
89	+5	6·8	+0·2	14·58	13·80	12·59	+1·30	14 80	13 94	20·31	21·48	—1 17	23·20	23·97	Darbhanga.
					11·13	13·33	—2·20	15·30	14·63	16·70	22·18	—5·48	22·40	24·66	Monghyr.
85	—	6·7	—	12·78	11·51	13·72	—2·21	16·43	14·75	17·74	23·12	—5·38	25·12	26 69	Bhagalpur.
90	+2	6·5	—1·0	9·29	17·08	18·16	—1·08	16·71	17·40	28·98	34·25	—5·35	27·23	33·19	Purnea.
91	—	7·8	—	10·28	11·48	12·91	—1·43	16·50	16·47	22·94	26·90	—3 06	29·50	31·67	Malda.
89	—	9·5	—	15·64	18·21	12·68	+5·53	18·47	15·67	26·65	24·03	+2·62	29·23	29 78	Santhal Parganas.
85	+4	7·9	+0·3	25·33	21·97	11·89	+10·08	17·25	14·79	28·03	24 50	+3·47	27·13	27·95	Cuttack
86	—2	8·7	+0·5	15·04											
84	—	6·5	—	18·00	17·47	12·15	+5·32	18·43	14 53	24·94	24·64	+0·30	31·00	28·90	Balasore.
87	—	7·1	—	19·34	19·16	10·91	+8·25	16·75	13·12	25·40	21 32	+4·08	25·04	24 85	Puri.
85	—	6·2	—	12·91											
83	—3	10·0	+0·7	14·14	14·29	14·33	—0·04	17·50	16·75	18·20	24·03	—5·83	24·07	28·58	Hazaribagh.
80	—	8·9	—	16·01	15·89	14·38	+1·51	17·67	17·01	18·72	25·03	—6·31	25·00	30·04	Ranchi.
84	—	5·4	—	9·80	13·64	13·85	—0·21	15·50	16·01	14·43	21·41	—6·98	17·50	25·38	Palamau.
86	—	6·2	—	11·95	13·33	12·81	+0·52	16·29	16 34	18·34	24·20	—5·86	25·58	30·00	Manbhum.
86	—	6·5	—	20·73	20·08	15·08	+5·00	19·00	16·51	26·28	27·75	—1·47	29·50	31·91	Singhbhum.
91	—	7·1	—	28·78											Lakhimpur.
94	+3	9·2	—	14·24											Sibsagar.
91	—	8·5	—	14·54											Darrang.
90	+2	7·3	+1·0	16·69											Goalpara.
88	+2	8·9	+0·7	14·01											Cachar.
85	—	8·0	—	12·12											Khasi and Jaintia Hills.
96	—	9·1	—	117·19											

(c) Mean of 19 days. | (d) Mean of 23 days.

Table of Rainfall recorded at stations

Meteorological Division.	Division.	District.	Station.	1	2	3	4	5	6	7	8	9	10	11	12	13	14	15	16	17	18	19	20
South-West Bengal.	Presidency.	Burdwan	Kalna ...	...	...	...	...	0·09	1·63	0·35	..	0·06	0·30	0·36	0·39	0·09	...	0·27	...	...	...	0·30	...
			Burdwan ...	...	...	9·08	2·47	0·77	...	0·02	0·01	0·05	0·08	0·06	0·78	0·75	0·02	...	0·66	0·04	...	0·12	0·02
			Katwa ...	...	...	...	0·07	0·58	0·05	...	...	...	...	...	0·35	...	0·09	...	...	0·30	...	0·46	1·14
			Raniganj ...	...	...	0·02	1·25	1·37	0·40	0·23	0·10	0·19	...	...	0·15	0·01	1·40	0·88	0·55	1·29	0·05	0·17	...
			Mankur ...	...	1·05	...	...	1·09	0·11	0·85	...	0·00	...	...	0·85	...	0·63	0·25	0·38	0·77	...	...	...
		Birbhum ...	Suri ...	0·01	0·02	0·08	2·48	1·43	0·82	0·05	...	...	...	0·36	0·92	0·38	0·61	0·31	0·31	2·41	0·25	0·90	0·52
			Hetampur ...	...	0·02	0·36	0·19	1·04	...	...	...	...	...	0·07	0·82	0·62	0·45	1·39	0·50	1·17	0·24	0·30	...
			Rampur Hát	...	...	0·03	1·31	3·01	0·25	...	...	...	...	...	0·38	...	0·28	...	0·47	0·38	1·71	1·68	...
			Bolpur ...	...	...	0·94	0·54	0·92	0·02	0·07	...	...	0·08	...	0·35	0·13	...	...	0·40	0·43	0·04	0·63	0·05
			Murari ...	...	...	...	...	9·18	0·72	0·13	0·19	...	...	2·54	1·04	...	...	...	0·37	0·76	2·54	0·24	...
			Labpur ...	...	...	0·54	2·15	1·80	0·49	0·48	...	0·16	0·30	...	0·52	...	...	0·23	0·33	0·13	0·23	0·05	...
		Bankura ...	Bankura ...	...	...	0·03	0·03	0·92	0·04	0·47	0·04	0·62	...	...	...	2·39	0·08	0·27	0·70	1·48	...	0·01	...
			Vishnupur ...	...	...	1·02	0·66	0·10	...	0·82	0·03	...	...	0·14	0·17	0·57	0·25	...	0·54	0·56	...	0·03	...
			Maliara ...	...	...	...	0·91	0·38	0·16	0·19	0·26	0·52	...	...	0·41	0·03	0·29	0·33	0·62	2·71	...	...	...
			Khatra ...	...	...	...	...	0·44	...	0·38	0·53	0·12	...	...	0·37	0·09	0·06	0·18	1·30	1·24	...	...	0·24
			Indas ...	...	...	0·80	0·99	0·26	0·71	0·22	0·04	...	...	...	0·35	...	...	...	0·25	0·07	...	0·03	0·48
			Kotalpur ...	...	...	...	0·55	...	0·50	0·31	0·15	...	0·12	...	0·06	...	...	...	...	...	...	...	...
			Onda ...	...	...	...	0·80	0·63	0·15	...	...	...	...	...	0·76	1·25	0·38	0·25	0·30	...	...	...	0·12
			Gangajalghati ...	...	...	0·10	0·50	0·50	0·37	0·89	0·23	0·30	...	...	0·53	0·32	0·39	0·50	0·25	1·11	0·07	...	...
			Raipur ...	...	...	0·08	...	0·53	...	0·30	...	...	...	0·48	0·80	...	0·73	1·05	0·15	0·55	...	...	...
			Sonamukhi ...	...	...	...	...	0·53	0·18	0·15	0·07	...	...	...	1·67	...	1·50	...	0·85	0·70	...	...	...
		Midnapore ...	Contai ...	1·40	...	0·18	3·36	0·93	0·16	0·37	0·42	0·04	0·36	...	0·36	...	0·78	1·28	1·22	...	0·15	...	0·16
			Tamluk ...	...	...	0·52	3·73	0·56	...	0·79	0·06	0·09	...	...	0·55	...	0·13	0·71	1·11	...	...	...	2·41
			Midnapore ...	0·38	...	0·50	0·55	0·04	0·13	0·34	0·06	...	...	...	1·04	0·30	0·96	0·06	0·60	...	...	...	1·05
			Ghatal ...	...	0·39	...	2·61	0·65	0·04	0·60	0·16	0·18	0·03	0·02	0·55	...	2·48	0·08	0·48	...	...	...	3·03
			Kukrahaty ...	0·53	...	...	5·75	0·25	0·41	0·42	0·27	...	1·69	...	0·84	...	2·16	0·30	0·70	...	0·06	0·18	1·61
			Garhbeta ...	...	...	...	0·35	0·06	...	0·95	0·13	...	0·20	0·65	0·66	...	1·55	...	0·10	0·46	...	...	0·15
			Panskura ...	...	...	0·19	2·35	0·96	0·03	0·56	0·14	...	...	...	0·43	...	...	0·14	1·53	...	...	...	0·93
			Dantan ...	...	...	0·07	1·90	2·90	...	0·24	...	0·40	...	...	0·13	...	0·73	0·10	4·00	...	0·32	0·20	6·05
		Hooghly ...	Serampore ...	...	...	0·72	0·35	0·36	0·12	0·75	0·14	...	...	...	0·75	...	0·06	0·33	0·55	...	0·07	...	...
			Hooghly ...	...	...	...	0·19	0·25	...	0·09	0·08	...	0·34	0·15	0·90	...	...	0·63	1·26	...	...	0·16	0·28
			Arambagh (Jahanabad).	...	...	0·37	0·76	0·33	0·02	0·49	0·28	0·04	0·03	0·85	0·14	...	0·81	...	0·99	0·02	...	0·10	0·70
		Howrah ...	Howrah ...	...	...	1·18	2·35	0·06	0·50	0·42	0·20	0·06	0·02	...	0·51	1·01	0·02	0·10	0·20	0·01	0·06	0·06	0·03
			Mohesreka ...	...	...	0·15	3·48	3·05	0·12	0·18	0·05	0·16	...	...	1·52	...	...	0·19	0·50	0·00	0·02	...	0·40
			Uluberia ...	...	...	0·12	2·54	0·80	0·54	0·35	0·24	0·40	0·14	...	1·38	...	...	0·30	0·24	0·08	0·04	...	0·05
			Amta ...	...	...	0·07	2·70	2·09	0·54	0·39	0·09	0·06	...	...	1·27	...	...	0·02	0·41	0·10	0·02	...	0·19
		24-Parganas ...	Saugor Island	0·57	...	0·09	6·84	1·02	0·18	0·26	0·18	0 01	0·28	...	0·01	...	0·05	0·38	0·70	...	8·25	...	0·50
			Diamond Harbour.	..	...	...	5·07	0·93	0·04	0·33	0·68	0·08	3·20	...	1·23	...	1·80	0·70	0·45	0·23	0·09	0·20	1·18
			Budge-Budge	...	...	0·03	1·23	0·27	...	0·05	0·20	0·33	...	...	0·73	0·05	0·23	...	0·30	0·06	0·05	...	...
			Canning Town	...	...	...	0·56	...	...	0·46	...	...	0·54	...	0·41	0·08	...	...	0·21	...	1·18	...	...
			Alipore (Obsy.)	0·02	...	0·63	3·04	0·04	0·30	1·13	0·56	0·32	0·07	...	0·51	0·04	0·03	0·57	0·38	0·03	0·07	0·01	0·15
			Barrackpore...	...	...	0·31	0·40	0·30	0·17	0·63	0·15	...	...	...	0·92	...	0·15	...	0·75	...	0·08	...	...
			Dum-Dum ...	...	...	0·23	0·67	...	0·33	0·23	...	...	0·13	...	0·30	...	0·35	...	...	...	...	...	...
			Baraset ...	...	...	0·04	0·43	0·02	0·04	0·46	0·10	...	0·09	0·08	0·31	...	...	0·04	0·51	0·08	0·44	0·15	...
			Basirhat ...	0·57	...	...	0·12	...	...	0·56	0·26	0·08	0·12	...	1·89	...	0·36	...	0·82	0·20	2·06	0·10	...
		Nadia ...	Ranaghat ...	0·02	...	0·23	...	0·06	0·17	0·10	...	0·20	0·08	0·10	0·68	...	0 94	...	0·10	0·06	...	1·10	...
			Krishnagar ...	0·04	0·01	0·35	...	0·36	1·20	0·27	...	0·20	...	...	1·57	...	0·03	0·03	0·08	0·06	0·01	0·20	0·88
			Chuadanga ...	0·31	...	0·11	0·13	0·31	0·75	0·04	...	0·05	0·21	0·01	0·81	...	0·21	1·00	0·12	0·54	0·08	0 38	0 31
			Meherpur ...	...	0·02	...	0·08	0·33	0·87	0·23	...	0·59	0·18	...	...	...	0·16	...	0·06	0·27	0·46	1·27	0·46
			Kushtia ...	0·73	0·04	0·04	0·60	0·53	0 31	0·15	...	...	...	...	0·37	...	...	0·13	0·21	0·95	0·03	0·17	0·47
		Murshidabad	Kandi ...	...	...	0·40	...	0·75	0·37	0·08	...	0·11	...	...	0·72	...	0·02	...	0·18	0·24	0·08	0·55	0·06
			Berhampore...	...	...	...	1·35	2·11	0·31	0·50	0·11	0·49	...	...	0·09	...	0·05	...	0·35	0·30	2·89	0·44	0·60
			Lalbagh ...	...	...	0·08	...	0·14	0·53	..	1·03	..	0·03	0·17	0·42	...	...	...	0·06	0·46	5·50	0·73	0·62
			Azimganj ...	...	...	0·83	...	0·47	0·37	0·19	..	0·13	...	0·50	0·15	...	0·07	...	0·20	0·83	3·27	1·31	...
			Jangipur ...	...	...	0·52	...	1·60	1·77	0·02	0·08	...	...	0·86	1·62	0·15	...	...	0·34	0 10	1·99	1·02	0·39
			Lalgola ...	...	...	1·36	0·80	0·26	0·50	0·24	0·10	...	...	...	0·68	...	...	...	0·17	2·85	0·40	1·30	1·88
			Akriganj ...	0·02	...	...	0·70	0·71	0·18	1·58	...	10·15	0·02	...	...	...	...	...	...	0·25	5·40	1·81	...
			Patkabari ...	...	0·70	...	0·10	0·30	0·50	...	...	...	...	...	...	0·20	...	...	0·30	0·10	0·30	2·10	0·20
			Dumkal ...	...	...	...	0·50	0·62	0·20	...	...	0·35	...	...	...	...	...	...	0·40	0·55	0·30	0·40	...
		Jessore ...	Narail ...	0·08	0·13	2·05	0·01	1·25	0·21	1·01	...	...	...	0·39	0·03	...	...	...	0·04	0·12	0·50	0·18	0·03
			Jessore ...	0·09	...	...	0·08	1·57	0·40	0·20	1·24	0·03	0·09	...	0·35	...	0·04	...	0·15	1·07	0·15	0·14	...
			Jhenida ...	0·50	...	0·06	...	1·50	0·03	0·50	...	0·10	0·26	...	0·56	...	0·06	0·54	0·08	1·80	0·20	0·32	0·32
			Magura ...	0·26	...	...	...	0·17	0·11	0·21	0·36	0·01	0·51	0·06	0·27	...	...	0·57	0·17	0·87	0·10	0·32	0·30
			Bangaon ...	0·54	0·82	...	0·03	0·42	0·34	0·34	0·03	0·14	0·09	0·24	0·30	0·18	...	0·13	0·16	1·19	0·08	0·27	...
		Khulna ...	Satkhira ...	1·12	...	0·85	...	0·15	...	...	0·32	0·40	0·28	0·56	0·52	...	0·12	0·14	0·65	0·47	3·73	0·15	...
			Bagerhat ...	2·46	...	0·77	1·60	0·30	0·82	0·08	0·10	0·59	0·20	1·09	0·13	...	...	0·05	1·50	1·90	3·75	0·81	0·82
			Khulna ...	2·10	...	0·05	0·70	0·49	...	1·20	0·50	...	...	0·51	0·04	0·07	0·50	0·10	0·13	...	2·00	1·50	0·40
			Kaliganj ...	0·05	...	...	1·32	0·85	0·50	...	0·40	0·25	0·24	...	0·85	...	0·50	...	0·10	0·85	3·00	...	...
			Nakipur ...	0·97	...	...	0·72	...	...	0·42	0·17	...	...	1·07	0·68	...	0·53	...	0·40	0·82	4·95	0·32	...
			Dumuria ...	1·35	1·35	0·37	2·12	...	0·52	0 50	0·35	...	...	0·24	...	...	0·53	...	0·84	1·91	2·35	0·21	1·81
			Rampal ...	1·50	...	0·55	0·82	...	0·58	0·05	0·25	0·05	0·74	0·38	...	...	...	...	1·73	2·72	0·01	...	...
			Sharonkola ...	2·29	0·80	0·14	0·80	0 04	0·17	0·36	0·13	0·10	0·56	0·14	0·32	...	0·07	0·16	0·04	0·30	0·37	0·40	0·16
			Paikgacha ...	1·31	...	...	1·85	2·03	..	0·58	...	0·40	0·15	0·16	0·35	...	..	1·30	1·00	0·30	3·00	...	0·20
			Mollahat ..	4·25	...	0·02	1·25	0·75	0·22	1·25	...	3·61	0·02	0·21	...	0·02	0·35	0·21	7·02	3·15	4·25	...	...
			Morelganj ...	2·43	...	...	1·24	0·42	0·05	...	0·32	0·42	...	0·07	0·58	...	...	...	3·00	4·07	5·72	1·29	...
			Tala ...	3·60	0·51	...	2·00	0·18	0·67	0·40	0·60	0·04	...	0·54	...	4·66	0·24	0·09	0·22	0·24	3·18	0·11	0·10
	Rajshahi.	Rajshahi ...	Boalia ...	1·12	...	...	0·61	1·13	0·40	1·14	0·05	0·29	0·02	...	0·09	...	...	0·02	0·19	1·92	3·17	1·17	0·07
			Nator ...	0·45	0·37	1·09	0·82	...	0·76	0·28	0·11	...	0·05	0·22	0·08	...	...	...	0·13	0·11	1·28	0·18	0·31
			Naugaon ...	...	...	1·31	...	0·15	0·34	..	...	...	...	0·80	0·50	...	...	0·60	...	...	0·52	3·27	0·35
			Lalpur ...	0·60	...	...	0·60	0·04	0·72	0·03	...	...	...	0·05	...	...	...	0·35	0·60	0·84	2·38	0·20	...
			Manda ...	1·15	...	1·15	...	1·52	...	0·25	1·16	0·35	0·14	0·55	0·47	...	1·11	..	...	...	0·15	1·50	1·51
			Mahadebpur ...	...	...	...	...	1·32	...	...	...	0·35	0·20	0·30	0·55	...	0·18	...	...	...	0·26	0·32	1·33
		Dinajpur ...	*Nithpur* ...	...	0·09	...	...	0·11	0·58	...	...	...	0·35	...	0·16	...	...	0·04	0·43	0·19	...	0·85	1·56
			Nawabganj ...	...	...	2·20	...	1·10	...	0·30	0·80	1·00	1·85	0·20	0·30	...	0·52	...	...	1·00	1·02	1·20	...
			Ganpurampur	0·04	...	4·20	...	1·75	1·15	1·40	0·10	...	2·20	0·15	0·17	0·04	...	1·63	0·52	0·30	1·30	2·50	2·45
			Churaman ...	...	...	0·48	...	0·18	0·73	...	0·83	...	2 08	1·13	2·59	0·35	...	0·08	0·07	0·16	...	2·94	0·95
			Raiganj ...	0·03	...	0·90	...	0·45	0·40	0·05	0·04	...	5·60	0·40	4·39	...	...	0·32	0·20	0·20	1·70	0·03	0·40
			Dinajpur ...	...	...	0·30	0·19	6·87	1·30	0·55	0·05	0·02	2·13	1 37	1·05	0·03	...	...	0·15	0·02	1·46	1·84	1·18
			Balughat ..	0·24	..	1·06	...	1·12	0·76	1·13	...	...	0·94	...	0·47	...	...	...	0·41	0·48	0·76	0·84	1·20
			Thakurgaon ...	...	...	3·89	...	4·02	1·89	0·90	...	...	...	2·36	1·85	...	...	...	...	...	0·10	0·22	1·77
			Sitabganj ...	...	0·80	...	...	3·80	1 72	0·60	...	...	2·20	1·15	2·30	0·36	...	...	...	0·38	1·92	0·42	1·35
			Ramganj ...	...	...	2·96	0·04	3·85	1·50	...	0·34	0·04	1·05	2·14	1·50	0·07	...	...	...	0·18	2·63	0·93	2·09
			Atwari ...	...	0·04	0·72	0·40	4·38	1·82	...	0·40	1·41	5·60	3·08	5·61	2·57	...	...	0·08	0·30	1·62	0·47	1·41
			Birganj ...	...	...	2·39	...	3·72	2·40	0·10	0·06	...	1·55	1·60	5·56	...	...	0·32	...	0·13	0·67	1·10	2·40
			Parbatipur ...	...	...	0·75	...	1·63	2·71	0·14	0·03	...	4·05	1·54	1·80	...	...	...	0·59	0·17	1·78	1·26	0·88

in Bengal in July 1902.

21	22	23	24	25	26	27	28	29	30	31	Number of rainy days.	Average number of rainy days.	Total rainfall for the month.	Average rainfall for the month.	Heaviest rainfall during the month.	Total rainfall from 16th May up to 31st July 1902.	Average rainfall from 16th May up to 31st July.	Station.	District.	Division.	Meteorological Division.
0·31	0·79	0·42	...	...	...	...	1·02	0·89	2·95	0·11	14	13·71	10·23	11·24	2·95	22·80	24·26	Kalna ...	Burdwan.	Burdwan.	South-West Bengal.
0·17	0·77	0·04	0·02	...	0·48	0·61	0·15	0·01	1·25	0·09	12	16·10	9·59	12·32	2·47	18·90	25·75	Burdwan			
0·81	1·30	2·05	0·18	...	0·28	0·23	0·84	0·21	3·31	...	14	15·23	11·00	10·71	3·31	19·87	23·60	Katwa.			
0·17	1·48	0·06	...	...	0·05	0·29	1·59	0·53	0·29	0·05	18	16·39	12·59	14·15	1·60	21·74	26·37	Raniganj.			
0·14	0·61	0·11	...	...	...	0·55	0·90	0 65	1·95	...	16	15·88	10·79	12·82	1·95	16·26	26·68	Mankur.			
0·22	1·21	0·46	0·03	...	0·13	1·00	0·73	0·08	0·72	2·12	20	17·38	17·45	18·89	2·48	22·13	36·15	Suri ...	Birbhum.		
0·13	1·71	0·03	0·13	...	0·44	0·42	1·54	0·17	1·48	1·50	20	16 52	14·53	12 76	1·71	22·86	25·94	Hetampur.			
...	0·39	2·3.	0·50	...	0·88	1·21	0·13	...	0·47	3·49	17	16 18	12·86	11·33	3·49	27·68	24·20	Rampur Hát.			
0·10	2·55	0·51	...	...	0·18	...	...	...	2·60	0·10	14	15·50	11·20	11·64	2·60	15·90	25·22	Bolpur			
...	0·48	3·92	0·41	...	0·19	0·48	0·19	0·25	0·21	5·35	19	17·17	26·91	14·92	9·18	37·72	29·09	Murari			
0·07	2·89	0·45	0·17	...	0·06	0·15	0·28	0·10	2·52	0·94	21	13·86	15·23	11·40	2·52	22·71	24·85	Labpur.			
4·83	1·28	.	...	...	0·01	0·06	0·30	0·07	0·32	...	11	16·46	13·62	12·87	4·53	19·61	25·52	Bankura ..	Bankura.		
1·95	0·33	0·02	...	...	0·30	0·23	0·50	0·02	4·00	0·06	16	16·48	12·67	11·85	4·00	17·56	26·03	Vishnupur			
...	0·59	...	...	...	0·40	...	0·28	0·22	0·20	...	16	16·43	8·97	12·68	2·71	15·14	25·05	Maliara.			
0·05	0·10	...	...	...	0·11	...	0·60	1·23	0·16	...	14	16·95	7·14	13·45	1·30	10·85	28·45	Khatra.			
0·35	...	...	...	...	...	1·12	0·38	0·03	0·53	0·08	12	15·94	6·09	12·07	1·12	13·53	26·11	Indas.			
1·30	0·04	...	...	...	...	0·65	1·06	...	1·08	...	9	12·35	5·31	12·35	1·30	15·15	26·07	Kotalpur.			
0·35	0 78	...	...	...	...	0·35	0·16	...	1·10	...	14	14·08	8·03	10·38	1·25	13·94	22·32	Onda.			
0·38	...	...	...	...	...	...	0·75	0·10	0·42	...	17	14·13	7·50	12·16	1·11	12·39	26·10	Gangajalghati.			
...	0·10	1·40	...	...	1·37	1·20	1·62	...	...	...	18	16·56	10·38	12·27	1·62	15 20	27·52	Raipur.			
0·58	0·44	...	...	...	...	1·05	0·39	0·04	1·67	...	12	14·94	9·82	11·08	1·67	16·05	24·89	Sonamukhi.			
2·63	0·40	...	..	...	...	5·75	1·86	0·08	...	...	18	15·52	21·98	14·52	5·75	26·30	27·22	Contai ...	Midnapore.		
3·50	0·29	...	...	...	...	0·50	0·49	...	1·23	...	14	13 37	10·07	12·12	3·75	22·59	24·65	Tamluk.			
0·18	1·13	0·77	0·05	...	0·06	2·40	0·98	0·04	0·62	0·58	17	15·95	12·90	12 56	2·40	10·82	25·63	Midnapore.			
1·79	0·80	0·48	...	...	0·04	2· 2	0·37	0·17	2·80	0·03	17	15·36	18·77	12·47	2·80	25·58	25 32	Ghatal.			
1·02	0·20	...	...	...	...	2·36	1·05	0·06	0·75	...	18	15·00	20·51	12·58	5·75	27·76	26·38	Kukrahaty.			
0·80	1·55	...	...	...	...	0·05	0·80	0·12	0·75	0·25	16	15·63	9·53	12·58	1·35	17·43	26 94	Garhbeta.			
1·53	1·22	1·68	...	0·03	...	1·48	0·92	0·33	1·02	...	16	14·38	16·04	11·00	2·35	18·86	24·93	Panskura.			
0·10	0·10	0·80	1·20	...	0·10	3·75	1·18	0·13	0·73	0·04	19	13·13	18·85	12·13	4·00	24·61	24·68	Dantan.			
...	1·26	1·34	0·12	...	...	0·27	1·67	0 55	2·54	0·15	17	17·30	12·01	13·64	2·54	21·57	25·51	Serampore ..	Hooghly.		
0·18	1·23	0·87	0·33	0·08	0·42	0·85	0·33	0·08	2·39	0·04	19	18 39	11·78	11·37	2·82	24·51	25·57	Hooghly.			
0·40	1·25	0·03	0·23	...	0·36	0·70	1·95	0 07	1·15	0·50	18	15·50	10·95	12·18	1·95	20·59	25·37	*Arambagh (Jahanabad).*			
0·90	0·52	2·60	0·22	...	...	0·17	0·55	0·06	2·60	0·02	16	18·06	14·40	13·04	2·60	23·30	26·05	Howrah ..	Howrah.		
0·15	3·89	2·93	...	...	...	0·15	0·09	...	0·93	...	15	16·35	17·18	12·14	3·48	26·42	25·23	Mohesreka			
0·48	1·65	1·56	0·04	...	...	0·96	0·30	0·08	1·67	...	17	16·67	13·75	10·42	2·44	22·77	24·75	Ulubaria			
0·15	1·97	1·69	...	...	0·26	0·46	0·06	0·04	1·75	0·08	14	?	14·80	?	2·70	20·15	?	*Amta.*			
7·38	0·11	0·10	...	...	0·03	2·17	0·88	0·25	...	...	17	16·74	29·74	15·72	7·38	30·83	29·21	Saugor Island	24-Parganas.	Presidency.	
1·41	0·12	...	...	...	...	0·22	0·55	0·03	0·19	...	16	17·23	16·98	14·96	5·07	28·09	28·14	Diamond Harbour.			
...	0·73	1·45	...	...	...	0·21	0·58	0·02	3·78	0·02	12	?	10·98	?	3·78	21·63	?	*Budge-Budge.*			
0·12	0·32	...	...	...	...	0·09	1·22	0·14	0 09	0·69	11	16·94	6·01	12·61	1·32	10·20	27·75	Canning Town.			
0·13	0·89	5·39	0·58	...	...	0·08	0·34	0·08	2·84	0·02	16	18·96	15·53	12 31	3·39	26·12	26·30	Alipore (Obsy.)			
0·15	1·02	1·57	0·12	...	...	...	2·10	0·25	2·01	...	16	15·94	11·57	11·98	2·01	20·44	25·09	Barrackpore.			
0·40	0·73	3·32	...	...	...	2·38	0·56	0·08	1·72	...	14	17·03	11·34	11·08	3·32	23·16	26·09	Dum-Dum.			
...	1·40	1·20	0·36	...	0·15	0·06	1·20	0·18	2·13	...	13	16·13	9·29	10·96	2·13	19·46	24·13	Barasat.			
...	0·51	0·83	...	...	0·54	0·12	1 62	0·40	0·68	0·38	19	16·48	11·58	12·82	2·06	25·19	27·84	Basirhat.			
0·60	1·52	0·38	...	...	0·56	0·04	0·28	0·18	1·12	0·50	17	14·68	8 93	10·55	1·52	19·99	23·73	Ranaghat ...	Nadia.		
0·18	0·77	0·23	0·23	...	...	0·40	0·59	0·27	1·24	0·23	17	15·87	9·51	10·36	1·57	17·45	23·41	Krishnagar.			
0·47	0·36	0·41	0·08	...	0·26	...	1·10	0·12	0·20	0·15	21	15·26	8·40	10·29	1·16	22·26	23·00	Chuadanga.			
0·60	0·52	0·68	0·06	...	0·30	...	0·97	0·02	0·55	...	16	15·68	8·69	10·11	1·27	24·56	23·56	Meherpur			
0 09	0·52	0·20	...	0·08	0·17	1·28	0·51	0·24	0·17	0·01	18	15·84	8·20	10·50	1·28	26·95	25·70	Kushtia.			
...	0·45	0·84	0·17	...	0·79	0·51	0·08	0·13	1·24	1·00	16	15·92	8·77	12·16	1·24	18·54	25·04	Kandi ...	Murshidabad.		
0·21	0·60	1·01	0·32	...	0·94	0·02	0·32	...	3·57	...	17	15·71	16·07	10·52	3·57	24·09	23·50	Berhampore			
1·04	1·75	0·25	2·50	...	2·89	...	0·39	0·08	4·00	0·20	17	15·64	22·86	12·03	5·50	26·85	24·58	Lalbagh.			
0·09	0·30	1·97	0·05	0·26	0·05	0·10	0·11	0·30	0·01	1·68	19	15·69	14·14	10·75	3·27	28·21	23·56	Azimganj.			
0·03	0·14	2·68	0·18	0·07	...	...	0·09	0·46	0·91	3·85	17	15·73	18·57	10·92	3·35	27·70	23·48	Jangipur.			
0·30	0·32	3·43	0·05	...	...	0·09	0·28	...	1·05	3·15	18	15·78	17·31	11·49	3·43	25·68	24·81	Lalgola.			
0·75	0·19	0·08	...	1·38	1·20	0·11	0·54	0·20	1·03	0·47	17	15·67	18·33	11·34	6·40	31·77	27·04	Akriganj.			
0·80	...	2·50	0·60	0·20	0·60	...	0·30	0·56	0·20	...	18	12·00	10·70	8·85	2·50	22·10	22·57	Patkabari.			
0·32	0·22	0·63	0·60	...	0·75	...	0·30	0·30	0·90	0·50	17	15·63	7 80	10·28	0·90	21·47	24·23	Dumkal.			
0·48	0·73	0·18	0·19	0·14	...	0·15	0·25	1·60	0·87	0·21	19	15·30	10·82	9·83	2·05	28·79	24·52	Narail ...	Jessore.		
0·55	0·31	0·50	0·57	1·78	0·13	1·84	0·21	1·20	0·66	0·10	22	17·52	15·25	11·62	1·84	31·68	28·76	Jessore.			
0·38	...	...	...	0·52	0·14	0·10	0·45	0·13	0·30	0·60	20	16·00	9·83	10·29	1·50	23·26	25·23	Jhenidah.			
0·05	0·17	0·52	0·02	0·01	0·07	0·05	0·22	0·33	0·39	0·31	19	16·10	6·13	10·61	0·87	20·3.	26·06	Magura.			
0·37	0·42	0·51	...	0·25	0·49	1·08	0·68	0·51	0·77	...	22	15·48	10·35	10·86	1·19	23·71	24·62	Bangaon.			
...	...	...	...	...	0·52	0·27	1·47	1·23	0·24	...	19	17·65	13·19	12·35	3·75	30·24	27·39	Satkhira ...	Khulna.		
0·31	0·76	0·96	...	...	0·01	...	1·10	1·60	0·89	1·15	22	19·80	32·87	14·53	3·75	37·25	29·73	Pagerhat.			
0·12	0·60	0·40	0·50	...	0·25	0·06	0·70	2·50	0·32	0·50	21	18·37	16·22	12·28	2·50	31·74	28·34	Khulna.			
...	0·05	0·02	...	...	...	...	3·33	0·67	0·36	...	15	?	14·04	?	3·33	32·35	?	*Kaligunj.*			
...	0·40	0·80	...	...	...	...	3·15	0·41	0·23	0·38	17	15·27	15·98	12·62	4·95	24·13	28·55	Nakipur.			
...	0·50	0·41	...	1·36	...	1·05	1·50	3·40	0·13	0·05	21	?	22 84	?	3·40	38·61	?	*Dumuria.*			
...	2·30	...	...	...	...	...	...	2·50	0·48	0·16	13	16 90	14·33	13·71	2·73	31·12	29·70	Rampal.			
...	0·41	1·53	...	0·13	...	0·19	0·71	1·18	0·75	...	24	?	12·01	?	2·29	23·57	?	*Kularoa.*			
0·30	0·40	0·30	...	...	0·20	...	1·27	4·80	...	0·30	20	?	21·63	?	4·80	39·80	?	*Paikgacha.*			
3·13	0·62	1·21	0·75	2·13	...	0·12	1·12	0·02	0·02	...	19	?	35·50	?	7·02	48·60	?	*Mollahat.*			
0·45	0·40	2·29	0·27	0·04	0·41	0·22	0·78	2·36	0·32	0·19	22	?	28·83	?	5·72	50·13	?	*Moreiganj.*			
0·07	0·40	...	...	0·08	0·11	0·06	0·91	4·00	0·15	0·07	20	?	23·24	?	4·86	41·56	?	*Tala.*			
0·12	0·44	1·13	0·04	0·32	0·34	0·10	0·36	0·23	0·32	1·36	20	16·16	16·54	11·46	3·17	32·35	25·34	Boalia ...	Rajshahi.	Rajshahi.	North Bengal.
0·28	0·30	1·05	0·09	0·04	1·20	0·34	0·10	0·08	0·32	0·55	21	16·00	10·28	12·78	1·88	27·55	27·35	Nator.			
0·10	0·12	0·73	1·19	1·72	1·20	...	0·04	...	0·03	1·03	16	15·72	14·49	12·12	3·27	33·74	28·20	Naugaon.			
0·03	0·44	0·53	1·03	...	0·70	0·30	0·02	0·30	0·50	1·10	16	14·60	11·96	9·75	2·38	27·60	22·54	Lalpur.			
0·26	1·25	0·15	0·75	0·15	0·16	...	0·12	0·52	0·47	0·65	23	14·55	15·49	12·04	1·53	36·25	24·85	Manda.			
0·11	0·18	0·32	...	...	1·23	...	...	0·15	...	0·15	15	15·74	6·95	12·78	1·33	27·35	27·44	Mahadebpur.			
1·43	0·45	0·25	0·45	...	0·30	0·31	...	0·36	0·01	1·77	16	?	9·78	?	1·77	30·24	?	*Nithpur* ...	Dinajpur.		
...	...	0·05	0·92	...	...	...	...	...	...	...	14	?	13·06	?	2·20	35·06	?	*Nawabganj.*			
0·07	0·06	0·40	0·35	...	1·00	0·37	...	0·40	0·02	2·20	20	?	24·96	?	4·20	44·98	?	*Ganyarampur.*			
0·66	0·13	0·37	0·08	0·04	0·48	0·08	0·14	0·04	...	1·03	17	15·86	15·97	14·41	2·94	26·20	28·91	Churamau.			
0·15	0·03	1·05	0·05	4·85	0·50	0·02	...	0·16	0·10	2·82	19	17·40	26·51	15·55	5·60	42·52	33·43	Raiganj.			
0·19	...	0·30	0·20	2·00	1·05	0·03	..	...	0·19	1·36	19	16·36	23·74	15·23	6·87	42·17	35·92	Dinajpur.			
0·44	0·02	0·15	0·22	1·02	0·08	0·14	0·03	0·50	0·08	0·22	20	16·33	13·07	13·19	1·20	32·58	28·45	Balughat			
...	...	...	3·00	5·82	...	...	...	...	...	2·78	18	17 77	30·58	23·38	5 82	43·98	43 3.	Thakurgaon			
0·10	...	1·48	0·21	3·80	0·20	0·11	...	...	0·10	2·60	21	?	25·75	?	3·80	41·42	?	*Saiabganj.*			
0·01	0·07	0·12	0·75	4·35	0·10	0·34	...	...	...	3·38	17	?	28·70	?	4·35	43·55	?	*Ramganj.*			
0·06	1·21	0·04	1·40	4·64	0·55	0·08	...	0·05	0·37	2·73	20	?	41·22	?	5·69	58·42	?	*Atwari.*			
0·63	0·15	0·84	0·73	2·10	0·72	...	...	0·15	0·10	1·60	21	?	28·77	?	5·58	45·83	?	*Birganj.*			
0·54	...	0·42	0·59	0·03	0·24	...	...	...	0·08	1·59	17	?	20·65	?	4·05	41·08	?	*Parbatipur.*			

Table of Rainfall recorded at stations

Meteorological Division.	Division.	District.	Station.	1	2	3	4	5	6	7	8	9	10	11	12	13	14	15	16	17	18	19	20
North Bengal—concluded.	Rajshahi—concluded.	Jalpaiguri ...	Jalpaiguri	...	...	2·46	4·06	1·50	2·50	1·05	2·13	0·85	0·27	1·46	1·07	0·46	...	...	0·16	0·23	0·64	1·03	1·30
			Alipur Duar	...	...	0·24	0·43	1·37	0·68	0·76	4·44	2·44	6·11	4·27	1·66	0·72	...	0·22	0·29	0·68	0·71	0·11	0·14
			Falakata ...	...	...	0·15	..	1·15	2·07	2·45	1·30	3·40	1·85	3·01	1·06	...	...	...	0·60	0·10	0·91	...	...
			Debiganj ...	...	...	1·20	0·08	2·27	1·80	0·90	0·40	0·83	1·14	1·31	2·00	0·40	0·58	...	...	0·71	0·81	0·32	0·70
			Bhagatpur (Nagrakatta).	0·42	...	0·25	0·63	2·95	0·87	0·40	5·65	0·65	...	2·15	5·40	...	...	...	0·60	0·40	0·16	1·05	0·32
			Bara ..	0·50	0·74	0·78	0·06	1·15	1·46	0·92	9·22	1·02	2·35	2·30	5·12	0·70	...	...	1·04	0·85	0·67	0·85	...
			Kalchini ..	..	1·67	...	1·12	1·43	0·94	4·05	0·30	2·30	0·53	2·35	0·24	...	0·13	1·74	0·73	0·40	...	...	0·14
		Darjeeling ...	Siliguri ...	...	0·02	0·75	0·44	0·18	2·02	...	2·72	2·30	0·13	1·56	9·50	1·00	...	...	0·25	0·60	1·54	0·73	0·38
			Darjeeling ...	0·02	0·35	1·40	...	0·79	3·34	0·04	0·02	0·40	0·41	0·30	2·03	0·20	...	...	1·30	4·78	3·16	0·85	1·09
			Kalimpong ...	0·11	0·15	0·38	...	0·18	1·25	0·07	0·16	..	...	0·06	2·94	0·83	...	...	3·34	2·06	0·64	0·57	1·04
			Mongpoo ...	0·28	0·40	0·35	...	0·99	2·23	0·01	0·02	1·21	0·47	0·16	5·60	1·22	...	...	2·65	1·85	1·79	0·90	0·90
			Kurseong ...	1·12	0·00	1·52	0·32	2·22	1·75	0·32	0·41	1·36	1·75	0·21	5·94	0·57	...	...	1·55	4·57	4·05	1·05	0·54
			Pedong ...	0·63	...	...	...	1·25	1·43	...	...	0·32	...	0·30	2·63	...	...	0·80	1·01	1·17	0·67	1·07	0·57
		Tibet ...	Yatung ...	0·05	0·50	0·08	0·03	...	0·72	...	0·30	[illegible]	0·10	[illegible]	...	0·32	0·18	0·11	0·10	0·47	0·44	0·22	0·50
		Cooch Behar	Dinhatta ...	...	...	0·58	1·38	0·95	2·08	...	0·06	1·19	1·35	0·67	[illegible]	[illegible]	...	...	...	1·17	0·84	0·76	0·08
			Cooch Behar...	...	...	...	0 14	2·24	2·54	0·16	9·03	2·10	3·08	0·80	3·02	2·55	...	...	0·42	0 73	0·78	0·18	0·25
			Mickliganj ...	...	...	0·26	...	2·50	1·90	0·70	1·44	2·65	1·68	1·70	1·18	1·58	...	...	0·26	0·44	0·36	0·44	0·10
			Mathabhanga	...	...	...	0·28	2·65	2·86	0·13	3·75	1·06	4·80	2 05	2·71	1·30	...	...	[illegible]	[illegible]	1·04	0 03	0·07
			Fulbari ...	...	...	...	1·07	1·32	2 35	0·33	3·90	2·87	3·81	2·84	2·95	0·75	...	...	0·53	1·00	[illegible]	[illegible]	[illegible]
		Rangpur ...	Bhawaniganj (*Gaibanda*).	...	...	0·10	...	0·39	0·52	...	...	...	0·47	4·84	0·19	0·16	...	...	...	0·64	0·81	1·87	...
			Rangpur ...	0·46	...	...	0·52	0·18	2·52	0·24	0·26	0·51	2·22	1·12	0·84	1·12	...	...	...	0·86	0·74	1·42	0·52
			Peerganj ...	...	...	0·58	...	...	1·65	0·20	0·17	0·52	0·92	1·90	0·27	0 42	...	...	...	0·62	1·90	1 04	0·50
			Kurigaon	...	...	...	0·28	0·21	2·40	0·08	0·79	0·15	0·89	0·84	0·70	...	...	...	0·18	1·50	0·08	0·76	...
			Gobindganj ...	...	...	0·86	...	0 03	0·28	0·10	0·29	...	1·21	0·50	0·12	...	...	...	0·12	0·14	0·25	1·25	1·77
			Bagdogra (*Nilphamari*).	0·13	...	0·76	0·37	3 42	3·50	0·23	0·45	0·41	1·00	2·70	4·34	...	0·50	..	...	0 20	1·00	0·32	0·61
			Ulipur ...	..	...	0·67	...	0·35	...	0·52	0·30	...	1·00	2·80	0·57	0·52	...	...	...	0·80	0·30	1·00	0·05
			Sunderganj ...	...	..	0·32	...	1·84	...	0·14	0·04	1·31	2·28	0·03	...	...	...	0·20	0·61	0·45	1·60	0·21	...
			Saidpur	...	0·75	...	...	2·75	...	2·33	...	0·83	3·75	2·37	3·85	...	...	1·10	...	...	2·40	0·92	1·20
		Bogra ...	Sherpur ...	...	...	1·65	0·05	. .	1·42	...	...	...	...	2·12	...	...	...	0·15	...	0·90	0·25	0·65	0·15
			Nowkhilla ...	...	...	1·34	...	...	..	...	...	...	0·30	3·10	2·22	...	...	...	0·20	0·30	0·80	0·25	2·00
			Bogra ...	0·36	...	1·05	0·23	0·18	1 70	0·29	0·19	...	...	0·18	0·31	...	...	...	0·06	0·72	0·64	0·48	0·67
			Panchbibi ...	...	...	2·04	1·02	1·14	1·00	2·01	0·50	1·12	0·17	0·12	...	...	...	1·12	1·19	0·16	1·24	0·07	0·18
		Pabna ..	Pabna ..	0·40	0·15	...	0·27	0·31	0·60	0·03	...	...	...	0·09	...	...	...	...	0·27	0·30	0·31	2·72	1·31
			Sirajganj ..	0·25	0·10	0·05	0·25	0·50	0·21	0 08	0·10	0·15	0·02	1·00	0·94	...	...	...	0·23	1·00	1·03	0·77	0·22
East Bengal.	Dacca.	Dacca ...	Munshiganj...	0·07	0·11	...	2·46	0·06	...	0·26	0·46	0·36	0·03	0·23	2·24	...	0·03	0·01	0·55	1·48	3·32	0·54	...
			Dacca .	0·06	0·01	...	0·15	0·06	...	0·08	0·31	0·38	0·02	0·08	1·15	...	0·01	0·02	0·21	1·40	1 02	1·08	0·08
			Narayanganj	0·18	...	...	1·80	0·21	...	0·58	0·28	0·20	...	0 87	3·45	0·07	...	...	0·15	1·70	2·30	0·60	0·02
			Manikganj ...	0·53	0·03	...	0·13	0·40	...	0·10	0·14	0·18	0 08	0·07	0·50	...	...	...	0·05	0·52	1·50	2·01	0·24
			Jaydebpur ...	...	...	0·10	0·25	0·05	...	...	...	0·15	...	0·10	2·00	...	...	0·15	...	1·06	1·65	0·90	1·40
		Mymensingh..	Kishorganj	0·05	0·29	0·11	...	0·34	0·23	0·46	...	0·75	0·40	0·59	2·14	...	...	0·04	0·02	0·30	1·90	0·13	0·10
			Atia (*Tangail*)	0·30	...	...	0·25	0·08	0·14	...	0·10	...	0·05	0·12	4·08	...	...	0·04	0·16	1·80	3·00	1·42	...
			Mymensingh	0·04	0 10	0·07	0 11	1·30	2·38	0·74	0 31	...	0·05	0·76	4·40	0·78	...	...	0·05	0·34	0·22	0·51	0·35
			Jamalpur ..	...	..	...	1·10	1·84	1·30	0·22	0·18	...	0·22	3·85	1·35	...	...	0·55	...	0·53	0·70	1·38	1 70
			Netrakona ...	0·05	0·11	1 12	1·50	3·04	1·85	0·80	0·14	.	0·16	0·60	14·40	1·42	...	...	0·05	1·99	1·22	1·40	0·15
			Subarnakhali							Not recorded.													
			Durgapur ..	0·10	...	2·60	0·90	0·15	...	0·20	0·60	0·85	1·31	3·20	3·15	...	...	...	1·70	1·85	0·90	1·20	0·50
			Sherpur Town	...	2·00	...	0·10	0·75	0·70	0·75	...	..	0·46	6 50	3·00	...	...	...	...	...	0·45	2·50	1·06
			Diwanganj ...	...	4·00	...	...	2·25	0·15	...	...	2·15	13·25	0·02	...	...	...	...	0·35	...	2·75	0·28	...
			Nalitabari ...	0·06	2 09	0·64	...	...	1·31	0·09	...	0·56	10·92	2·92	...	...	...	...	0·49	0 62	0·72	...	2·25
		Faridpur ..	Madaripur ...	0·36	0·19	...	0 70	0·10	...	0·27	0·50	0·73	0·04	0·30	0·40	...	0·03	...	0·17	2·01	3·14	0·98	0·88
			Faridpur ...	0·66	...	0·25	1·50	0·10	...	0·77	...	0·03	0·11	0·06	1·05	...	...	...	0 07	0·22	0·77	2·39	1·06
			Goalundo ...	0·74	...	...	0·49	...	...	0·26	0·08	...	...	0·23	1·15	...	...	0·03	0·09	1·13	0·51	0·62	2·35
		Backergunge	Patuakhali ...	1·25	0·15	1·50	0 38	0·18	0·07	0·35	0·65	0·25	0·08	0·11	0·35	...	0·15	0·05	0·75	6·00	5·66	4·61	2·65
			Pirojpur ...	1·46	0·09	...	0·31	0·66	0·12	1·69	0·11	0 28	0·28	1 59	0 60	...	...	...	1·13	2·67	0·00	1·28	0·30
			Barisal ...	...	1·23	...	1·79	0·07	0·05	0·52	0·66	0·28	0·15	0·20	0·28	...	...	...	0·45	5·47	2·03	0·64	0·62
			Gaurnadi ...	0·75	0·08	0·05	1·61	0·05	0·02	1·11	0·26	0·32	0·10	0·48	0·14	...	...	...	0·21	1·57	3·87	1·17	0·14
			Bhola ...	0·36	0·03	0·06	2·80	0 03	0·13	0·05	0·25	0·58	0·04	1·11	0·80	...	...	...	2·14	3·94	2·05	1·73	1·78
			Daulatkhan ...	..	2·92	3·08	0·46	0·10	...	0·09	...	0·88	0·30	0·29	0·19	...	...	...	1·74	5·02	2·81	3·20	0·54
			Bauphal ...	2·71	1·20	...	2·70	0·50	0·28	...	0·50	1·60	0·29	1·61	0·16	...	...	...	1·98	2·20	4·14	2·10	4 61
	Chittagong.	Hill Tippera .	Agartala ...	0·72	...	...	0·31	0·02	0 02	...	...	0·22	0·05	0 77	...	1·04	0·18	0·71	0·02	1·70	...	0·70	...
		Tippera ...	Comilla ...	0·30	0·81	0·01	0·59	0·09	...	...	0·07	0·26	0·23	0·62	1·41	...	0·03	0·01	0·51	1·43	1·70	0·48	0·30
			Chandpur ...	0·39	1·21	0·24	1·40	0·22	0·11	0·07	0·66	0·26	0·23	0·76	0·54	0·01	...	...	0·32	2·07	2·40	1·12	0·40
			Brahmanbaria	...	...	...	0·26	0·23	0·22	...	...	...	0·19	0·25	0·25	0·25	0·13	...	...	0·68	0·57	0·32	0·28
			Ramchandrapur.																				
			Nasirnagar ...	0·25	0·30	...	...	...	...	0·20	...	...	0·75	0 95	1·16	...	0·10	...	...	0·46	0·44	...	0·30
			Daudkandi ...	...	0·37	.	0·52	0·86	...	...	0·50	...	...	0·53	1·00	..	...	...	0·65	0·96	1·50	2·06	0·25
			Kasba ...	...	...	0 00	0 19	...	...	...	1·15	0·30	0·50	0·11	1·30	...	...	0·62	0·10	0·80	1·08	0·60	...
			Laksam ...	2·12	...	0·28	0·14	...	...	..	0·26	...	1·50	...	2·10	...	0·50	...	1·70	2·10	1·90	0·10	...
		Noakhali ...	Noakhali ...	0·50	6 65	0·65	0·58	0·05	...	0·09	0·18	0·77	0·09	0·77	1·90	...	...	0·16	3·50	5·50	4·45	2·90	0·54
			Fenny ...	0·20	1 25	0·36	0·15	0·57	...	...	0·44	0·30	0·50	3·14	1·51	...	0·05	...	0 90	4·70	3·63	1·83	3·02
			Harishpur ...	0·70	2·74	0·32	1·55	0·53	0·10	...	0·55	0·15	0·32	1·83	0·59	1·88	0·04	0·08	0·99	4·50	9·50	4·22	0·82
			Ramganj ...	...	0·43	...	0·67	0·10	...	...	0·50	1·00	0·42	0·05	1·66	...	...	0·10	0·75	2·77	2·30	0·87	...
			Chhagalnaya	1·55	0·56	0·25	0 02	0·06	...	0·05	...	1·08	1·34	2·75	0·90	...	0·11	...	0·29	3·50	3·75	2·00	2·82
			Hatya ...	0 84	2·79	0·44	0·62	0·34	0·06	0·20	0·21	0·13	0 05	1·38	8·12	0·13	0·02	...	3·41	5·94	4·85	2·74	0·64
			Lakhmipur ...	0·35	...	...	0·05	..	...	...	0·85	...	0·22	0·50	1·21	...	...	0·09	0·82	4·45	1·80	0·53	...
		Chittagong ...	Cox's Bazar ...	1·69	1·84	2·88	2·18	0·02	...	0·23	0·43	0·05	0·20	0·30	...	...	0·13	1·39	4·34	2·68	5·00	2·68	4·04
			Chittagong .	1·60	1·95	0·72	0·72	1·06	...	0·04	...	0·12	0·15	0·34	0·26	...	0·05	1·17	0·39	6·04	5·00	5·12	1·90
			Kutubdia ...	1·81	1·80	4·10	4·54	...	...	...	0·27	.	1·25	0 15	0·27	...	...	0·61	1·82	3·50	3·89	3·26	4·76
			Satkania ...	0·31	0·92	1·46	0·25	0·12	0·09	0·65	0·32	0·71	0·18	0·25	...	..	0·95	...	3·00	1·75	1·77	4·30	0·72
			Kodala ...	.	0·40	1·07	1·04	...	0·20	0·22	0·10	0·30	0·10	0·56	...	0·71	1·70	0·12	2·81	1·11	3·10	1·71	0·40
			Fenua ...	0·50	0·42	0·87	0·38	0·02	1·62	...	0·21	0·08	0·17	1·43	0·05	0·07	0·23	0·12	4·87	8·90	5·85	1·54	0·10
			Mirsarai ...	0·73	1·96	0·30	0·27	0·16	...	...	0·12	0·21	0·95	1·21	0·55	...	0·06	0·13	0·32	4·87	7·38	5·15	1·83
		Chittagong Hill Tracts.	Rangamati ...	2·38	1·61	0·66	1·78	0·65	0·44	...	..	0·20	0·54	0·31	0·05	0·08	0·91	0·12	0·35	0·96	0·72	2·14	0·13
			Bandarban ...	3·45	0·15	0·91	0·81	0·08	0·42	0·32	0·27	0·62	0·10	0·37	0·01	0·48	0·50	0·58	0·74	1·75	0·93	2·79	0·45
			Barkal ...	0·64	1·30	0·85	1·94	1·09	...	0·95	0·36	0·18	0·56	0·54	0·47	0·30	0·50	...	...	0·40	0·77	1·15	...

in Bengal in July 1902—*continued*.

21	22	23	24	25	26	27	28	29	30	31	Number of rainy days.	Average number of rainy days.	Total rainfall for the month.	Average rainfall for the month.	Heaviest rainfall during the month.	Total rainfall from 16th May up to 31st July 1902.	Average rainfall from 16th May up to 31st July.	Station.	District.	Division.	Meteorological Division.
0·25	0·10	0·91	0·49	2·70	3·08	...	...	0·73	..	0·65	24	20·16	28·40	39·91	4·03	64·37	63·46	Jalpaiguri ...	Jalpaiguri.	Rajshahi—*concluded*.	North Bengal—*concluded*.
...	...	2·18	5 15	0·86	0·42	...	0·08	0·78	...	..	23	17·67	34·54	33 17	6·11	73·74	70·56	Alipur Duar.			
0 10	...	0 16	3·01	0·71	3·90	0·10	...	0·40	0·05	0·76	20	19·87	24·13	28·44	3·90	62·09	59·59	Falakata.			
0·14	0·32	0·38	5·30	3·92	1·28	0·13	...	0·12	. .	0·85	24	18·47	27·33	21·17	5·30	44·97	47·11	Debiganj.			
1·15	...	1·23	0·90	1·75	2·00	0·85	0·40	2·40	0 83	0·25	25	23·25	33·56	37·18	5·65	68·24	70·81	Bhawatpur (Nagrakatta).			
0·07	0·25	0·24	4·70	1·60	1·15	0·27	0·72	0·05	4·97	1·15	25	24·50	41·89	50·42	9·22	94·30	102·63	Baxa.			
0·27	0·24	2·81	2·49	0·35	0·15	...	0·81	0·28	0·62	1·77	25	?	28·05	?	4 05	63 99	?	*Kalchini.*			
0·19	0·15	1·20	0·25	3·15	3·13	2·60	0·97	1·65	...	0·67	25	22·72	37·48	32 38	9·50	74·54	62·30	Siliguri ..	Darjeeling.		
0·43	0·77	0·56	2·48	2·23	0·90	2·05	1·19	0·98	0·72	1·05	25	25 87	35 83	31·74	4·78	61·55	59·98	Darjeeling.			
0·08	0·30	0·07	0·23	1·96	0·50	4·34	3·60	0·75	1·59	0·51	22	23·94	27·78	25·18	4·34	46 58	45·43	Kalimpong.			
0·16	2·33	0·63	1·35	2·78	2·15	5·32	1·41	1·42	0·85	0·94	25	23 75	40·37	32·34	5·60	68·83	61·43	Mongpoo.			
0·23	2·06	0·46	0·38	4·68	0 81	4·41	0·79	0·85	2·68	1·42	26	27·33	48·03	46 23	5·04	74·44	85·33	Kurseong.			
0·45	0·81	0·85	0·85	1·24	0·90	2·40	3·20	1·22	0·85	0·94	23	25·75	24·42	24·66	3·20	41·40	46·67	Pedong.			
0·38	0·59	0·41	0·41	0·34	0·14	0·92	0 13	0·42	0·09	0·07	22	23·86	8·72	9·47	0·92	19 21	19·16	Yatung ...	Tibet.		
...	0·45	2·38	4·59	0·03	0·06	0·22	...	0·11	...	...	18	17·32	30·46	18·81	8·56	50·11	55·27	Dinhatta .	Cooch Behar.		
0·05	0·16	1·35	6·75	1·42	0·03	0·35	...	0·29	...	0·26	22	18·79	35·68	25·58	9 03	72 30	69·75	Cooch Behar			
0·60	...	0·14	5·50	3·90	1·20	0·36	0·09	0·16	...	...	22	18·91	29·04	24·41	5·50	55·62	58·24	Miokliganj.			
...	0·25	0·42	4·33	1·43	0·67	1·31	0·03	0·23	0·02	0·02	19	18·86	31·83	26 51	4·86	69·82	63·39	Matabhanga			
0·03	0·68	2·22	6·55	0·62	0·15	...	0·09	0·67	...	...	19	17·29	35·30	23·94	6·55	75·67	58·69	Fulbari.			
0·02	0·12	0·93	0·31	...	0·13	0·02	...	...	0·11	0·09	15	14·43	11·72	13·28	4·84	43·70	31·49	Bhawaniganj (*Gaibandha*)	Rangpur.		
...	0·36	0·32	1·12	...	...	...	...	0·42	0·40	0·78	21	15·42	16·43	16·01	2·53	38 30	42·65	Rangpur.			
0·05	0·32	0·63	1 05	...	0·27	...	...	0·50	0·09	0·50	19	14·00	14 10	12 89	1·99	35·33	32·18	Peerganj.			
...	...	4·14	1·20	0·08	0·08	0·2	1·30	...	...	0·09	15	13·93	15 87	15·77	4·14	51·09	46·14	Kurigaon.			
...	0·10	1·18	0·29	0·07	1·53	...	...	...	0·19	0·10	18	15·20	10 38	13·55	1 77	30·93	30·39	Gobindganj.			
...	0·14	1·58	1·20	0·84	1·34	...	...	0·23	...	0·03	23	16·46	24·99	18·07	4·34	40·26	46·55	Bardogra. (*Nilphamari*).			
0·03	0·08	1·20	0·25	0·08	0·03	0·05	..	0·15	...	...	14	12·87	10·85	13·26	2·80	31·14	39·70	Ulinur.			
...	0·55	1·22	0·07	...	...	...	...	0·05	0·22	..	13	13·61	11·18	15·68	2·28	38·44	35·26	Sunderganj.			
...	1·50	0·18	...	0·53	0·40	...	...	...	...	0·50	16	?	25·38	?	3·85	61·73	?	*Saidpur.*			
0·25	0·33	1·11	0·28	0·20	4·06	0·15	...	0·07	0 55	0·26	17	16·48	14·60	12·81	4·06	38·46	29·44	Sherpur ...	Bogra.		
0·15	0·10	...	2·20	0·25	...	...	...	...	0·10	0·38	15	15·60	13·69	11·99	3·10	33·19	28·80	Nowkhilla.			
0·30	0·20	0·65	0·38	0 23	4·70	...	0·11	...	...	0·35	21	15·94	13·98	15·12	4 70	33 28	31·52	Bogra			
0·12	0·07	1·00	0 10	0·30	0·70	0·20	0·20	0·40	0·47	0·10	24	15·04	10·67	13·10	2·04	43·73	29·85	Panchbibi.			
...	0·36	0·20	. .	...	..	0·35	0·10	...	0·22	0·11	16	16 35	8·10	10·31	2·72	33·90	26·24	Pabna ...	Pabna.		
0·80	0·35	0 16	1·32	0·11	0·07	0·16	0·06	0·04	0·09	0 40	22	14·36	11·13	11·30	1·32	36·80	27·72	Sirajganj.			
0·05	0·39	0·57	...	2·32	0·03	0·24	0·24	0·04	0·40	0·58	18	17·45	17·57	14·05	3 32	45·03	33·68	Munshiganj ...	Dacca.		
...	0·16	0·51	...	0·56	0·03	0·16	0·12	0·06	0·30	0·01	14	17 61	8·05	12·73	1·46	35·43	30·72	Dacca			
0·03	0·07	0·90	0·08	2 09	...	0 36	0·24	0·03	0·24	0·20	18	17·76	16·30	13·25	3·45	43 17	3·90	Narayanganj.			
0·33	0·22	0 19	0·69	0·02	0·06	0·56	0·08	0·14	0·17	1·02	19	16·34	10·41	11·01	2·01	39·64	27·26	Manikganj.			
0·00	0·25	0·12	1·12	0·75	0·30	...	...	0·10	...	0·50	18	18·07	11·55	13 10	2·00	45·07	33 07	Jaydebpur.			
...	0·12	0·40	1·10	2·84	0·08	0·12	0·03	0·03	0·00	...	18	17·20	12·67	13·02	3·84	45·34	39·06	Kishorganj ...	Mymensingh.		
0·17	0·12	0·16	0·45	0·16	..	0·75	0·10	..	0·51	...	18	13·23	13·95	10·95	4 08	35·59	23·28	Atia (*Tangail*).			
0·13	0·15	1·28	0·32	2·50	0·89	0·03	0·01	...	0·02	0·16	20	19·85	17·50	17·15	4·40	56·68	43·50	Mymensingh.			
0·31	0·19	0·34	0·24	1·80	0 26	...	...	...	0·19	...	20	16·65	18·10	13·61	3·85	38·32	33·98	Jamalpur			
0·31	0·35	0·42	1·45	0·84	0 25	0·12	0·08	...	...	3·35	23	21·00	37·23	18·91	14·40	77·43	50·27	Netrakona.			
			Not recorded.									16·00		12·56			30·29	Subarnakhali.			
0·15	0·10	0·66	3·50	2·40	0·40	0·21	0·03	0·03	0·03	1·75	23	21·14	28·47	29·19	3·30	69·85	67·70	Durgapur.			
0·14	0·10	0·12	1·04	0·06	0·08	...	0·21	...	...	0·30	17	19·00	20·53	17·92	6·50	46·21	39 80	Sherpur Town.			
...	...	0·35	0·16	.	...	...	...	...	...	0·45	18	13·07	26 26	14·06	13·25	43 14	35·42	Diwanganj.			
0·08	1·38	1 93	0·13	0·40	...	0·24	...	0·30	0·02	0·23	18	?	27·38	?	10·02	62·67	?	*Nalitabari.*			
0·70	0·44	0·25	...	0·06	...	0·31	0·19	2·73	0·50	...	21	17·23	17·17	11·50	3·14	41·31	28·07	Madaripur ...	Faridpur.		
0·50	0 18	0·33	1·44	0·17	...	0 25	0·40	0·24	0·77	0·37	21	17·13	13·72	12 47	3·30	41 97	30·35	Faridpur.			
0·12	0·23	0·42	0·25	0·11	...	0·41	00·7	0·08	0·60	...	16	14·93	9·97	11·19	2·35	31 85	27·63	Goalundo.			
0·05	0·75	0·55	0·88	0·03	0·71	0·61	0·83	1·45	0·15	1·22	25	21·90	32·37	20·69	6·00	65·15	45·36	Patuakhali' ...	Backergunge.		
0·21	0·29	1·40	0·05	...	0·06	0·04	0·56	2 79	0·23	0·47	23	20·03	24·64	15·62	6·00	46 15	35·80	Pirojpur.			
0·12	0·09	3·68	0·42	0·39	0·15	0 50	0·30	4 80	0·06	0·65	22	20·58	25·60	16 34	5·47	66 16	37·08	Barisal.			
4·77	0·31	0·93	0 64	0 21	0·05	...	0·40	2·67	0·24	0·17	22	18·80	22·92	15 67	4·77	46 87	31·23	Gaurnadi.			
0·44	0·33	0·30	0·22	1·80	0·50	0·12	0·55	3·95	0·02	0·22	22	22 25	20·72	17·31	3·15	61·81	40·20	Bhola			
0·22	0·40	0·50	0·52	1·36	0·53	0·76	2·65	2·06	0·05	0·58	23	20·00	33·15	19·54	5·25	67·36	48·65	Daulatkhan.			
0·92	0·48	1·75	0·30	1·92	1·13	1·64	1·01	3·97	0·38	...	25	20·00	40·08	18 95	4 61	85 76	40·21	Bauphal.			
0·71	0·15	2·50	0·15	0·15	...	0·20	.	0·12	...	...	16	16·82	10·44	11·92	2·59	35 75	32·27	Agartala ...	Hill Tippera.	Dacca.	East Bengal.
0·02	0·50	0·80	0·16	0·14	0·13	0·03	0·03	0·01	0·06	0·37	18	19·07	11·08	17 05	1·70	37 11	40·76	Comilla ...	Tippera.		
0·36	0·19	0·79	...	0·45	0·02	0·06	0·40	0·15	0·30	0·06	23	19·52	15·43	14·24	2·49	44·34	3·96	Chandpur			
.	...	1·25	...	1·71	...	0·50	...	...	...	...	15	16·45	7·89	11·41	1·71	37·63	32·32	Brahmanbaria.			
.	0·27	1·20	...	0·46	..	...	...	0·02				14 60		12·03			28 45	Ramchandrapur.			
0·75	0·50	0·32	...	3·00	1·10	...	...	0·20	...	...	14	13·93	7·40	10·05	1·20	47·11	30·58	Nasirnagar.			
0·18	...	1·50	...	0·17	...	...	...	...	...	...	17	16·13	15·37	12·81	3·00	41·03	30·35	Daudkandi.			
0·50	0 50	0·80	...	0·70	0·60	...	0·60	...	1·00	0·87	15	15·33	9·20	11·98	1·50	32·25	33·10	Kasba.			
0·34	0·95	0·60	0·30	2·53	0·60	0·48	2·20	2·23	0·35	0·40	19	16 00	19·17	15·03	2·14	46·54	40·08	Laksam.			
0·17	0·40	2·75	0·81	3·75	0·47	0·06	0·81	0·06	0·81	1·52	25	22·81	40·14	22·10	6 65	70·63	51·28	Noakhali ...	Noakhali.		
0·43	1·25	1·05	0·25	0·40	0·02	0·50	1·00	0·58	0·30	...	24	22·29	33·60	24 66	4·70	65·48	55·10	Feuny.			
0·20	0 37	1·00	0·18	0·43	0·70	0·30	0 80	0·10	0·20	0·47	26	21·73	37·69	31·98	9·50	76 19	63·25	Harishpur.			
...	1·02	2·35	1·20	4·15	0·05	0·62	0·05	...	...	0·26	23	19·87	10·37	17·30	2·77	46·69	39·83	Kanganj.			
0·32	0·94	1·12	1·52	0·62	0·52	0·88	1·09	6·31	0·11	1·42	10	?	30·73	?	4·15	59 86	?	*Chhagalnaiya.*			
0·30	..	...	1·26	1·55	0·60	0·15	1·55	0·60	...	...	27	?	45 62	?	6·31	79·24	?	*Hatya.*			
											17	?	17·43	?	4·45	50·37	?	*Lakhmipur.*			
1·27	2·48	1·98	0·27	1·17	0·79	2·23	5·32	4·55	.	0·52	25	23·37	51·52	30·93	5·32	91·64	78·35	Cox's Bazar	Chittagong.		
0·10	1·80	4·68	1·22	1·20	0·06	0·68	0·45	0·09	0·35	...	23	19·45	37·16	22·01	6·04	71·51	51·55	Chittagong.			
1·16	0·96	0 80	2·03	1·55	1·28	3·20	2·36	0·72	...	...	25	21·00	45·66	30·65	4·70	73·43	62·08	Kutubdia.			
0·85	1·02	0·43	1·51	2 41	0·27	0·95	0·11	...	0·09	0·25	25	19·67	25·61	24 38	4 30	54·35	52 37	Satkania.			
0·40	1·58	1·50	1 30	0·12	..	0·12	0·02	0·21	0·12	0·86	26	20·39	21·85	18·54	3·10	56·05	44·26	Kodala.			
0·52	2·70	0·07	0·37	0·02	0·07	0·55	...	0·04	0·32	...	21	19·88	32·50	20·63	8·30	61·73	52·31	Feuna.			
...	0 90	1·29	0·99	2·19	0·10	0·45	0·18	0·04	0·40	...	24	21·00	32·74	26 00	7·38	66·38	57·10	Mirsarai.			
...	0·43	0·82	1·30	0·75	0·25	...	...	0·06	1·04	0·44	25	21·87	30·66	17·87	2·38	80·79	41·42	Rangamati ...	Chittagong Hill Tracts.		
0·25	0·33	1 20	2·32	1·23	0·18	0·08	0·18	0·01	0·03	0·06	25	21·30	21·88	20·43	3·45	54·10	50 84	Bandarban.			
0·40	0·23	0·72	0·98	0·54	0·31	.	...	0·65	2·00	...	24	?	17·83	?	2·00	45·09	?	*Barkal.*			

Table of Rainfall recorded at stations

Meteorological Division.	Division.	District.	Station.	1	2	3	4	5	6	7	8	9	10	11	12	13	14	15	16	17	18	19	20
BIHAR.	Patna.	Patna ...	Patna	...	...	...	1·28	...	0·41	...	0·08	...	1·92	...	0·02	..	0·74	...	...	0·18	0·38	0·30	...
			Dinapore	...	...	...	0·33	...	1·04	...	...	...	1·95	...	0·18	...	0·90	...	...	0·15	0·18	1·70	...
			Bihar	...	0·40	...	0·14	...	1·67	0·30	...	...	0·73	0·11	...	0·23	...	...	...	...	0·45	2·54	...
			Barh	...	2·19	...	3·14	0·05	1·12	...	...	...	...	...	...	...	...	...	...	0·33	0·28	0·18	...
			Bikram	...	..	...	0·30	0·05	1·73	0·06	...	0·18	0·9	...	0·31	...	0·21	...	...	0·25	0·22	1·30	...
			Hilsa	..	...	...	0·40	..	0·07	...	...	...	0·30	...	0·70	...	...	...	...	0·90	...	1·70	...
		Gaya ...	Aurangabad	..	2·07	0·26	0·13	0·13	0·82	0·02	..	1·65	0·06	...	0·13	0·86	...	...	0·05	0·21	0·06	0·05	0·84
			Gaya	... 0·10	0·11	0·07	0·05	0·08	0·20	..	0·91	0·07	0·85	...	...	0·07	1·62	...	...	0·03	0·70	0·31	...
			Nawada	...	0·02	...	2·50	0·03	1·70	...	...	...	1·63	...	...	0·25	0·25	0·01	0·15	0·02	0·17	1·15	0·01
			Jahanabad	..	...	...	1·50	...	2·20	...	0·15	0·86	0·10	0·22	...	0·03	...	...	0·10	0·09	0·43	1·88	0·25
			Arwal	... 0·00	0·70	...	0·20	1·02	0·37	0·34	0·45	2·80	0·04	...	...	...	...	...	0·17	0·17	0·36	1·70	0·32	0·37
			Daraundli	...	...	0·53	..	...	...	...	...	1·00	...	...	...	...	...	...	0·35	0·15	1·70	0·92	2·90
			Pakri Barawan	0·10	0·40	...	...	0·76	...	...	...	0·48	...	...	...	...	1·35	0·60	...	...	0·30	...	0·17
			Deo	...	3·80	0·03	0·23	0·59	1·25	0·03	...	0·65	1·40	0·02	0·06	0·77	...	...	...	0·70	0·80	...	...
		Shahabad ...	Buxar	...	2·03	0·30	0·03	0·22	0·73	0·02	...	1·03	0·96	...	...	0·02	0·04	0·32	0·03	0·61	0·22	0·88	0·02
			Dehri	..	2·27	1·27	0·45	1·04	0·22	...	...	0·23	1·43	...	0·27	0·14	...	...	0·03	0·12	0·02	...	0·02
			Shahbhua	... 0·0	0·10	0·48	0·24	1·12	0·48	1·48	...	1·20	0·98	...	1·02	...	...	0·35	0·32	0·18	0·37	...	0·03
			Sasaram	...	2·48	0·08	...	0·50	1·41	...	...	...	3·53	..	0 02	...	0·72	...	0·50	0·23	0·71	...	0·05
			Arrah	...	1·00	...	...	0 96	0·71	(0·26	...	...	0·71	...	...	...	...	...	...	0·03	1·37	0·70	0·17
			Mohania	... 1·33	0·46	0·04	...	0 80	0 34	...	0·63	2·49	...	...	...	...	0 20	...	...	...	...	...	...
			Khiri	...	0·90	1·10	...	...	...	1·50	...	...	2·15	...	0·23	0·80	...	•0·40					
			Ageaon	...	0·86	0·54	...	0·44	0·42	0·81	...	...	0·21	...	...	...	0·20	...	...	...	1·00	1·78	0·58	...
			Ramagar	... 0·52	0·24	0·85	...	0 83	...	1·56	...	0·14	0·84	0·10	...	...	...	...	...	...	...	3·32	0·59	...
			Koath	... 0·13	...	...	0·55	0·23	...	2·75	...	0·32	1·70	...	...	...	...	...	...	0·20	1·10	0·13	...
			Sikroul	...	...	1·03	...	...	0·30	2·95	...	...	0·58	...	...	...	...	...	0·28	0·20	1·06	...	...
			Bassowan	...	0·17	0·33	0 43	2·38	1·36	0·77	...	...	2·67	...	...	0·07	...	0·84	0·14	0·45	...	0·32	0·05
			Monaharpur	...	0·83	0·37	...	0·15	0·01	3·42	...	0·61	0·97	...	0·20	0 98	...	0·22	0·07	0·18	0·18	...	...
		Saran ...	Gopalganj	...	0·86	0·12	...	1·04	3·10	...	...	...	0·78	0·17	0·23	...	0·93	...	...	0 41	..	3·05	...
			Siwan	... 0·01	1·00	0·35	0 27	0·04	0·75	0·20	0·83	0·85	1·35	...	0·18	0·02	...	...	...	0·03	0·83	2·30	...
			Ekma	...	0·50	0·70	0·10	...	0 95	0·03	...	...	0 36	...	0·04	...	...	...	0·55	1·12	1·12	..	0·50
			Chapra	..	0·30	0·15	0·10	...	0·57	0·05	...	...	0·32	...	...	...	0·08	...	...	0·20	0·60	0·98	0·02
			Hathwa	...	1·79	0·46	...	1·31	0·03	...	...	0·51	1·02	...	...	...	...	...	...	...	1·11	...	0·24
			Amnour	..	1·08	...	1·19	...	2·35	...	...	...	0·90	...	...	...	...	0·20	...	0·17	...	1·35	0·05
			Basantpur	...	2·05	0·22	..	...	1·18	...	...	0·18	0·81	...	...	...	...	...	...	...	0·12	0·57	0·03
			Darauli	... 0·20	1 00	0·29	0·05	0·03	0 81	0·52	...	0·06	0·43	...	...	...	0 15	...	0·06	0 02	1·77	0·84	0·14
			Bhorah	...	1·80	0·50	...	0·06	0·43	0·45	0·10	1·00	0 35	0·29	0·15	1·30	...	...	...	0·32	0·44	0·77	...
			Sripur	...	1·12	0·39	...	0·12	1·67	0·20	0·01	0·10	0·16	0·38	0·13	...	...	...	...	0·20	0·14	0·81	...
		Champaran ...	Motihari	...	2·60	...	...	0·52	4·79	0·10	0·25	0·85	2·27	...	...	...	...	0·02	0·02	...	0·03	2·82	0·72
			Bettiah	...	5·14	...	0·09	0·02	3·48	0·06	0·04	2·91	1·28	...	...	...	...	...	0·35	...	0·10	2·08	0·05
			Bagaha	...	2 11	...	0·40	0·75	2·29	1·19	0·09	0·38	4·73	0·42	...	0·05	...	...	0·61	0·03	...	0·94	0·20
			Barnurwa	...	3·35	...	...	0·35	3·15	...	...	...	0·12	1·05	...	...	...	...	0·10	...	0·06	0·32	0·07
			Ramnagar	...	3·50	...	0·50	0 50	3·50	...	...	...	2·00	0·50	0·50	...	...	...	0·50	...	0·50	0·70	1·00
		Muzaffarpur...	Sitamarhi	..	2·58	0·02	...	0·05	0·67	...	...	...	0·40	...	...	...	...	...	...	...	0·35	0·35	0·07
			Muzaffarpur	. 0·56	0·96	...	0·06	...	2·08	0·01	...	...	1·35	...	...	...	0·06	...	0·28	...	0·48	1·00	2·28
			Hajipur	...	...	..	0·56	...	...	0·60	...	...	0·80	...	...	...	0·06	...	0·31	0·17	1·02	0·57	0·06
			Paru	...	0·40	1·20	0·70	...	...	...	...	...	4·02	...	...	...	0·03	...	0·34	0·10	0·13	0·50	...
			Mahua	... 0·09	...	0·05	0·13	1·34	...	...	...	...	3 08	...	...	0·41	...	...	0·05	0·59	0·05	0·32	0·29
			Shiuhar	...	2·85	...	...	...	2·00	...	...	...	...	...	0·08	...	...	...	...	...	...	0·41	2·07
			Pupri	...	1·00	...	...	0·25	0·27	...	...	...	0·50	0·15	...	...	...	...	...	...	...	0·30	0·25
		Darbhanga ...	Tajpur (Samastipur).	...	1·95	0·07	...	...	0·41	0·03	0·03	0·02	1·74	...	0·30	...	...	...	0·02	0·14	0 71	0·32	0·88
			Darbhanga	...	0·31	0·24	...	0·73	0·17	...	...	0·20	0·19	...	1·52	...	...	...	...	0·03	0·50	1·04	1·91
			Madhubani	...	0·85	0·08	...	0·36	....	0·17	...	...	0·20	...	0·34	...	...	...	0·10	0·04	0·20	0·10	2·10
			Bahera	...	...	0·73	...	0·82	...	...	...	...	0·80	...	2·93	...	...	...	...	...	0·70	0·50	2·00
			Rosera	..	0·02	...	...	1·80	0·16	...	...	...	...	...	...	...	...	0·12	0·30	1·45	1·10	0·14	0·31
	Bhagalpur.	Monghyr ...	Begusarai	...	0·59	0·15	..	1·45	0·40	0·02	...	...	0·20	0·01	0·59	0·04	0·06	1·05	...	0·11	0·12	0·50	0·15
			Monghyr	...	0·06	0·54	0·02	0·95	0·19	...	...	...	0 52	...	...	0·15	...	...	...	0·18	0·87	0·75	...
			Jamui	...	0·21	0·03	0·01	0·01	...	0·09	0·08	...	0·55	0·10	0·67	...	0·05	0·09	...	0·18	0·05	2·05	...
			Gogri	...	...	...	...	...	...	...	...	...	...	...	2·92	...	...	...	0·30	...	...	0·50	0·36
			Jamalpur	...	...	0·34	1·95	0·50	0·07	...	...	...	1·40	...	0·80	...	...	...	...	0·52	0·35	0·14	0·23
			Shaikhpura	...	2·15	...	...	1·12	...	0·15	...	...	...	...	...	...	...	0·10	...	...	...	0·10	0·15
			Chakai Bamda	...	...	2·80	...	0·11	0·05	0·31	0·37	...	0·02	0·14	0·03	0·30	0 01	...	0·12	0·18	0·43	0·11	0·06
			Chupreon	...	0·15	...	...	...	0·21	...	...	1·00	0·15	...	...	...	...	...	0·58	0·70	0·30	0·56	1·05
			Gidhour	...	0·50	1·00	...	0·15	...	0·30	0·32	...	0·65	0·05	0·20	...	...	...	...	0·13	0·09	0·00	...
			Khargpur	...	...	1·10	...	...	...	..	...	...	0·90	...	...	...	0·75	...	0·25	...	0·40	2·30	0·40
		Bhagalpur ...	Madhipura	...	...	...	...	...	0·15	0·59	0·09	...	0·78	0·63	...	0·10	...	...	...	...	0·32	...	0·20	2·40
			Bangaon (Sylabad).						0·10													1·51		
			Supaul	...	...	...	...	...	0·10	0·06	0·48	...	0·02	0·27	...	0·80	...	...	...	0·08	0·03	0·24	0·51	2·13
			Pratapganj	..	...	...	...	0·10	1 52	0·18	0·01	0·70	0·95	0·23	0·20	1·04	...	...	...	0·01	0·32	0·04	0·20
			Bhagalpur	...	...	...	0·40	...	1·40	0·35	..	...	...	1·84	0 20	0·67	0·05	...	...	0·05	0·15	0·59	0·07	0·05
			Banka	..	...	...	1·40	...	0·40	0·01	0·60	0·10	..	...	...	0·15	...	0·10	0·12	0·20	0·42	1·01	1·05	...
			Colgong	..	...	...	0·17	...	2·78	0·25	...	...	0·11	1·14	0·34	0·09	...	...	0·21	0·35	0·50	1·10	2·50	2·45
			Bansli	...	...	...	1·70	...	0·90	0·50	0·25	...	...	...	...	...	0·20	...	0·08	0·75	0·90	0 70	0·25	...
		Purnea ..	Kishanganj	...	...	...	1·30	...	5·50	0·50	...	...	0·14	1·96	2·95	1·81	...	...	...	1·01	0·00	2·12	0·97	1·50
			Araria	...	...	...	...	...	1·50	1·30	...	0·04	0·05	0·21	0·73	1·83	...	...	...	0·30	...	0·94	0·81	2·36
			Purnea	...	...	...	...	...	0·94	0·40	0·34	0·02	...	0·28	...	0·59	0·04	...	...	0·01	0·08	0·23	0·30	1·57
			Goudwara (*Korah*).	...	...	...	...	...	0·40	...	...	...	0·38	...	...	0·43	...	0·95	0·05	0·04	0·54	1·70	0·20	0·84
			Barsoe	..	...	...	1·30	...	2 00	0·20	...	...	...	4·00	0·70	0·50	...	...	0·30	0·40	0·35	1·00	0·60	0·10
			Forbesganj	...	...	...	...	..	0·60	0·65	...	0·68	0·25	0·34	0·65	...	...	...	...	..	0·42	1·25	0·40	0·10
			Kaliagan	..	...	...	3·60	...	1·55	1·82	...	...	0·70	...	2·91	1·65	...	...	0·32	0·69	0·80	1·10	1·84	1·04
		Malda ...	Malda	..	0·08	...	0·23	...	1·02	1·29	0·03	...	0·02	0·41	0·06	0·20	...	...	0·10	0·24	0·29	0·02	1·08	0·07
			Chanchal	..	...	...	0·30	...	0·70	...	...	...	...	2·45	0·95	1·10	...	...	0·40	0·52	0·10	0·87	1·22	0·80
			Gajol	...	...	...	0·15	...	0·16	1·38	...	...	...	2·12	..	0·54	...	...	...	0·56	0·50	1·44	0·71	1·10
			Sibganj	...	0·01	...	0·08	..	1·10	1·98	0·01	0·01	...	...	0·07	0·32	...	...	...	0·21	0·84	1·21	0·30	1·12
		Sonthal Parganas.	Rajmahal	...	...	...	0·35	0·18	2·45	1·34	0·85	...	...	0·03	...	0·47	...	...	0·17	0·17	0·36	0·40	0·09	2·35
			Godda	...	...	...	0·77	0·15	2·72	0·88	0·10	0·21	...	0·84	...	0·08	0·66	0·24	0·12	0·45	0·30	1·14	2·07	0·40
			Pakaur	...	...	...	0·11	0·05	3·10	1·05	0·60	0·05	...	...	..	0 06	...	...	...	0·50	0·75	0·95	0·80	0·83
			Naya Dumka	...	...	...	0·05	0·14	3·71	0·77	0·07	0·05	...	...	0·32	0·27	...	...	0·04	0·42	1·30	1·59	0·48	0·18
			Deoghar	..	...	...	1·77	1·35	0·40	...	...	...	...	...	1·20	...	0·97	1·23	...	1·24	0·70	0·04	1·21	0·65
			Jamtara	..	0·02	...	...	0·30	1·86	0·22	0·38	0 02	...	...	...	...	1·63	2·34	...	0·02	1·87	0·35	0 20	0·43
			Mohagama	...	...	...	0·24	...	0·33	..	...	...	...	1·35	...	1·00	...	...	1·72	0·20	0·18	..	1·21	...
			Nunihat	..	...	...	0·60	...	3·00	0·80	0·15	....	...	0·85	0·64	0·08	...	...	...	1·20	0·48	1·50	1·50	2·80

in Bengal in July 1902—*continued.*

21	22	23	24	25	26	27	28	29	30	31	Number of rainy days.	Average number of rainy days.	Total rainfall for the month.	Average rainfall for the month.	Heaviest rainfall during the month.	Total rainfall from 16th May up to 31st July 1902.	Average rainfall from 16th May up to 31st July.	Station.	District.	Division.	Meteorological Division.
0·96	0·28	0·56	...	1·88	0·72	0·06	0·38	0·06	...	0·42	14	14·16	10·02	11·41	1·93	13 71	20·38	Patna	Patna.	Patna—concluded.	Bihar.
0·28	0·74	0·80	...	2·03	0 19	0·08	...	0·03			13	14 61	11·05	12 33	2·03	14·27	21·36	Dinapore			
0·14	1·12	1·40	...	1·05	1·86	0·12	0·06	0·20	0·40	0·37	18	15·00	14·19	12 00	2·34	16 01	21·01	Bihar.			
0·10	0·85	0·80	...	0·30	0 25	2·31	0·06	...	...	..	12	13 04	11·89	12·34	3·14	16·13	19 64	Barh			
0·87	0·62	0·40	...	0·70	0·17	0 30	0·45	0·21	0·07	0·02	17	14·57	9·40	13·14	1·73	12·82	23 25	Bikram.			
0·30	0·05	0·80	...	1·05	1·05	...	0·55	0·30	0·28	0·20	15	14 21	11·35	12·30	1·05	17 05	21 99	Hilsa.			
0·00	0·05	...	0·10	1·17	4·36	0·34	0·31	2·94	1·17	0·19	19	14·19	18·78	12·82	4·36	22·47	21·05	Aurangabad	Gaya.		
1·35	0·7[illegible]	0·13	0·06	1·02	2·96	1·03	1·76	1 21	0·84	0 26	18	15·08	16·77	12 31	2 90	19·16	19·96	Gaya.			
1·62	0·16	0·01	...	0·34	0·50	0·56	0·92	0·32	0·02	0 77	17	14·28	13·11	12·07	2·50	18·59	20 03	Nawada.			
1·74	0·07	0·54	0·31	0·59	1·76	1·50	0 43	0·31	0·02	0·19	18	13·75	14·07	12·20	1·88	18·31	19 80	Jahanabad.			
0·27	0·30	0 33	...	0·55	0·87	2·31	0·54	1·15	0·03	...	20	13 61	12 81	13·53	2·31	14·02	20·31	Arwal.			
0·23	...	0·18	5·33	0 05	0·70	0 82	0·04	0·10	...	0·35	19	14·00	16·03	12 48	5 33	18·46	1··43	Daudnagar.			
0·12	0·13	...	...	...	3·41	0·25	0 38	1·75	0·08	0·15	17	12·87	12·38	10·49	3·11	14·35	17·54	Sherghati.			
1·36	...	...	2·24	1·15	0·55	0 60	1·13	0·06	1·00	0·35	16	16 50	16·79	12 61	2 80	19·40	21·01	Rajauli.			
0·70	...	...	0·20	1·30	0·20	1·25	0·30	0·25	0·15	...	16	12 87	8·47	13 00	1 35	12·59	19 08	Pakri Barawan			
...	...	...	...	0 55	5·50	0·80	0·60	0·80	0·21	...	16	?	19·38	?	5 50	22 03	?	*Deo.*			
...	...	0·40	0·05	0·82	3·61	0·40	0·10	0·47	0·03	0·24	18	14·30	14·30	11·78	3·61	14·89	17·72	Buxar	Shahabad.		
6·10	0·02	0·03	0·04	0·28	2·71	0·89	0·17	3 56	0·57	0·18	18	14·72	16 10	11·64	3·55	23·36	18·76	Dehri			
...	...	...	1·00	0·46	5·50	...	0·05	0·78	0 84	0·21	21	13·71	18·43	12·28	5·50	20·46	18·13	Bhabhua.			
0·16	...	0·05	0·02	1·27	6·12	0 87	0·78	6 24	1·16	1·25	16	14 32	27 74	11 70	6·22	29·90	17·87	Sasaram.			
0·21	0·02	0·04	...	1 06	0·56	2·70	1·75	0·21	1·02	0·06	17	15 13	15·40	13·35	2·70	18·55	21·35	Arrah.			
...	...	...	2·05	3·80	0·11	..	2·45	0 45	1 20	1·07	15	11·15	15 53	13 80	3·80	18·53	20 68	Mohanea.			
...	...	0 70	0·02	...	1·38	0·00	0·75	0·19	1·09			13·89		13·13			19·10	Khiri.			
...	0·13	0·18	0·03	...	1·00	0 00	...	0·30	0·17	0·16	16	14·34	16 56	13·76	6 00	18·16	23·30	Ag aon.			
0·27	...	...	0·40	1·45	4·50	0·47	0·15	0·33	...	...	17	14·00	11·37	13·15	3·32	12·94	20·55	Kamazar.			
...	0·15	0·27	0·15	0·61	5·03	1·11	0·15	0·70	0·09	0·10	16	14·22	14·70	13·16	4·50	19 04	19·39	Koath.			
0·08	...	...	1·46	2 47	0·20	0·02	3·47	0·42	0·85	...	16	15·33	15·34	11·48	5·03	18 70	17 21	Sikrol.			
0 35	...	0·09	0·07	0 90	3·01	0·90	0·03	0·31	0·13	0·23	17	13·44	18·95	14·04	3·47	22·58	2· 11	Bassowan.			
...	0·45	0·36	0·08	1·30	1·02	0·70	0·12	...	...	0·57	18	14 11	15·11	12 10	3·91	19·59	19·10	Monoharpur.			
1·00	0·03	1·22	0·01	0·34	0·27	0·27	...	...	...	0·89	17	13·08	15·37	12 38	3·16	18·47	20·47	Gopalganj ...	Saran.		
0·80	0·05	...	...	0 90	...	0·47	...	...	...	0·02	17	14·19	12·54	11·86	2·30	13·93	20 07	Siwan.			
0·05	0·03	0·23	...	0·10	0 30	0 94	0·30	...	...	0·33	13	11·71	8·44	10·45	1·12	13·81	19·86	Ekma.			
...	0·89	...	...	0·21	0·08	0·77	0·05	...	...	1·11	14	14·23	5·05	11·30	0·08	9 46	18 54	Chapra.			
1·33	0·19	0·10	...	0·05	...	1·40	0·13	...	...	0·35	14	?	12·64	?	1·70	16 29	?	*Hathwa.*			
0·84	...	0 09	0·12	0·80	0·85	0·40	0·46	...	0·12	0·84	14	13·75	11·74	12 39	2·35	18·90	22 41	Amnour.			
0·70	0·35	0·35	0·05	0·18	0·25	0·18	0·18	0·06	0·12	0·24	15	13·50	9·68	12 38	2·05	11·44	21·51	Basantpur.			
...	...	0·73	0·06	0·06	2·01	0 28	0·73	..	...	0·78	19	?	9·06	?	1·77	11·51	?	*Darauli.*			
0·03	0·05	0·42	0·10	0·48	0·87	0·24	0·06	0·02	0·21	...	18	?	12·61	?	2·01	17·37	?	*Bhoreh.*			
											18	?	7·91	?	1·07	10·40	?	*Sripur.*			
0·03	0·04	0·07	0·15	4·02	2·16	1 13	0·02	...	...	...	13	12·48	22 70	12 49	4·79	29·51	23 26	Motihari ...	Champaran.		
0·03	...	0·18	0·03	1·88	0·60	0·07	...	...	...	...	11	13·40	19·91	16 08	5·14	26·89	24·08	Bettiah.			
0·01	...	0·06	0·03	2·26	0·05	0·03	...	...	...	...	14	15·25	17·75	16·35	4·73	22·32	23·65	Bagaha.			
0·08	...	...	0·11	2·33	1·86	0·21	...	...	...	0·05	11	14·19	13·27	12 04	3 35	20·28	21·49	Burhurwa.			
..	...	...	0·50	3·50	0·50	...	...	...	...	0·50	15	?	18·70	?	3·50	27·37	?	*Ramnagar.*			
0·05	...	...	0·43	4·42	2·07	0·23	...	...	0·01	...											
...	0·36	0·11	0·05	1·02	2·85	1·02	0·10	..	...	...	10	13·00	12·68	12·54	4·42	20·89	22 56	Sitamarhi ...	Muzaffarpur.		
0·67	0·43	1·80	0 09	1·17	0 93	0 08	0 02	0·04	...	0·70	14	14·39	15·63	11·90	2·85	18·49	20·35	Muzaffarpur.			
0·21	..	0·84	0·75	...	1·80	0·20	0·20	...	...	...	15	14·57	10·20	12·23	1 80	14·08	20·67	Hajipur.			
0·54	0·53	0·06	0·77	2·40	0·43	0·44	...	...	...	0·03	15	13·33	12·02	12·38	4·02	14·67	20·19	Paru.			
...	0·09	...	...	1·50	2·50	1·00	...	...	...	...	14	13·83	12·20	13 92	3·08	16·36	21·89	Mahua.			
...	...	...	...	5·35	2 30	0·55	...	...	...	...	7	11·67	12·50	10·48	2·85	18·61	19·11	Shiuhar.			
											10	11·33	11·21	11·48	5·35	22·49	21·15	Pupri.			
0·04	0·19	0·57	0·11	0·40	2·55	4·34	0·06	0·02	0·04	...											
0·24	0·38	0·60	0·01	2·70	2 65	0·87	0·23	0·03	...		14	13·73	14·94	13·89	4·34	21·46	21·42	Tajpur (Samastipur).	Darbhanga.		
0·20	0·01	0·02	0·04	3·50	1·04	1·06	0·32	...	...	...	17	14·37	14·58	12·14	2·70	21·53	21·15	Darbhanga.			
...	...	0·48	1·80	1·50	1·50	0·13	0·45	0·10	...	...	14	13·10	11·53	12·18	3·50	18·80	23 24	Madhubani.			
0·53	0·49	...	...	1·81	0·40	4·04	...	0·14	...	..	14	14·19	14 35	13 11	2·03	20·52	23·46	Bahera			
											15	14·33	14 06	12 04	4 04	18·05	20·15	Koserha.			
0·07	0·30	10·17	0·03	1·10	0·76	0·58	0·80	0·06	0·74	...	18	14·65	10·09	12·18	1·45	13·98	20·10	Begusarai ..	Monghyr ...		
0·06	0·15	2·02	...	1·30	0 54	2·55	0·50	0·04	...	0·01	15	15·41	12·39	12·42	2 55	15·75	20·90	Monghyr.			
0·34	0·97	0·02	...	0·24	0·65	0·40	0·02	0·21	0·31	0·67	16	16 65	9·48	13·90	2·05	14·29	22 40	Jamui.			
...	0·39	1·80	0·07	1·56	2·77	..	..	..	2·50	0·43	16	13·20	13 59	11 75	2·92	22·95	24·55	Gogri.			
...	0·20	2·57	...	0·82	0·56	2·50	0·51	...	0·50	0·98	17	16 53	15·38	15 72	2 27	20·41	25·49	Jamalpur.			
0·09	0·11	0·12	0·13	0·25	0·11	0·17	...	...	...	...	12	9·53	4·75	11·65	2·15	7·43	20·27	Shaikhpura.			
0·90	1·34	0·40	0 43	0·10	0·39	0·16	0·06	0·15	0·57	0·50	21	16·13	11·29	10·16	2·80	18 09	27 76	Chakai Banda			
...	0·36		...	0·87	3·63	0·16	0·05	...	...	0·31	14	13·13	9·95	11·67	3·63	15·00	18·85	Chupreon.			
0·41	1·80	0·65	...	1·40	0·40	1·32	1·50	0·25	0·50	1·55	19	14·83	14 57	12·23	1·22	24·92	20·41	Gidhour.			
0·28	...	...	...	0·03	0·72	1·85	0·73	0·06	0·09	..	11	16·17	9·86	12·28	2·30	14·03	20·59	Khargpur.			
0·15	...	1·00	0·10	2·75	0·10	0·05	0·45	0·01	...	0·15	15	14·77	10·02	12·87	2·75	16 16	23·61	Madhipura ..	Bhagalpur.		
1·10		0·25				0·21		0·50		0·50		11·43		12·80			20·16				
0·10	...	0·12	...	1·51	0·40	0·37	0·11	0·50	0·14	0·95	16	14·03	8·92	12·50	2·15	17·50	23·80	Bangaon (Sylabad).			
0·01	0·03	0·20	1·27	3·42	1·05	...	...	...	0·01	1·04	15	15 25	11·53	15·09	2·42	19·01	29 13	Sapaul.			
0·07	0·72	2 49	0·03	0·05	0·91	0·91	0·03	...	0·42	0·25	16	15 39	12·78	12 22	2·49	17·90	22·21	Pratapganj.			
...	0·20	0·16	...	...	...	2 60	0·16	...	...	0·38	17	16·42	10·63	12·14	2·60	14·08	21 83	Bhagalpur.			
...	0·46	1·00	0·86	0·50	...	0·40	...	0·14	0·19	1·05	20	15·75	16·59	12·40	2·78	23·77	23 08	Banka.			
...	0·50	0·07	...	0·75	0·32	0·80	0·30	0·05	0·50	0·50	16	14·17	10·05	11·06	1·70	15·63	21·05	Colgong.			
																		Bansil.			
0·35	...	0·05	2·52	3·21	0·88	0·56	...	0·03	0·30	3·72	18	18·30	30·93	19·21	5 50	48 30	38·34	Kishanganj	Purnea.		
0·15	...	...	0·50	0·65	0·32	0·70	...	...	0·04	1·35	16	16·87	14·08	17·49	2·38	26·54	34·56	Araria.			
0·80	0·08	1·16	0·33	1·06	0·31	...	0·14	0·02	0 03	0·53	15	17·13	9·39	14·98	1·87	20·03	28 45	Purnea.			
...	...	0·40	1·50	0·10	...	0·03	...	0·09	0·00	0·22	12	10·79	8·08	14·53	1·70	13·88	27·30	Gondwara (*Korah*).			
...	0·70	0·30	2·00	6·10	0·20	...	...	...	0·10	3·00	19	15·50	24·35	17·12	6·10	35·05	31·35	Barsoe.			
...	0·25	...	0·23	1·85	0 20	0·16	...	...	0·90	0·55	17	17·89	9·13	18·19	1·85	23·24	33 35	Forbesganj.			
0·19	0·15	...	1·90	1 20	0·10	0·05	...	0·10	1·10	0·20	20	18·29	22·81	25·58	8·00	30·82	46·40	Kalliganj.			
0·08	0·00	0·29	0·02	...	...	...	0·03	0·33	...	2·60	15	15·45	10 28	11·07	2·60	22·17	23·36	Malda ...	Malda.		
0·18	0·05	0·25	0·29	0·82	0·15	0·10	...	...	0·00	0·07	20	18·04	13 42	14 79	2·45	27·08	29·43	Chanchal.			
0·11	0·28	...	0·11	...	0·38	...	0·03	0·08	0·05	0·36	15	16·38	10·00	14·30	2·12	19·56	20·71	Gajol.			
0·16	0·57	1·47	0·02	...	...	0·27	0·10	0·10	0·18	2·08	16	16·00	12·17	11·40	2·08	22·02	24·48	Sibganj.			
0·15	0·47	0·11	0·07	2·13	0·49	...	...	0·35	...	0·81	19	15·40	20·59	12·41	6 03	36 05	24·66	Rajmahal	Santhal Parganas.		
0·06	1·45	0·45	..	0·04	0·50	1·04	0·16	0·03	0·16	3·07	22	16 04	17·85	11·80	3 07	23·17	21·06	Godda.			
0·24	0·21	1·15	0·08	...	...	0·21	0·25	0·08	0·18	3·20	17	17·00	15·11	13·27	3·20	25·25	27·05	Pakaur.			
...	1·03	1·38	...	...	0·10	0·50	0·52	0·11	0·96	1·54	18	18 72	15·04	14·14	3·71	22·38	26·26	Naya Dumka.			
...	1·10	1·20	...	0·74	0·07	1·60	...	0·72	0·82	0·85	18	17·97	18·66	14·00	1·77	20·25	24·10	Deoghur.			
1·08	1·43	2·30	...	0·78	0 57	0·13	1·60	0·27	0·08	1·20	21	17·63	20·83	13 80	2·34	28·42	25·23	Jamtara			
0·10	0·65	0·16	0·34	...	..	1·40	0·16	0·00	...	0·40	15	?	9·50	?	1·72	?	?	*Mohagama.*			
0·60	0·60	1·80	...	...	1·90	1·16	0·65	0·38	0·55	2·50	20	15·33	23·87	12·28	3·60	30·83	20·84	Nanjhat.			

Table of Rainfall recorded at stations

Meteorological Division.	Division.	District.	Station.	1	2	3	4	5	6	7	8	9	10	11	12	13	14	15	16	17	18	19	20
BIHAR—*contd.*	Bhagalpur—*contd.*	Sonthal Parganas—*contd.*	Asseuboni	...	0·48	...	4·30	1·89	...	...	...	...	...	0·45	...	0·35	...	0·29	0·98	2·39	0·59	0·09	...
			Katikund ...	...	...	...	..	3·00	1·43	0·01	..	...	...	0·25	0·10	0·86	0·60	...	1·00	1·45	2·50	0·50	0·26
			Madhupur ...	...	...	1·42	0·30	2·80	0·95	0·45	0·10	...	0·70	1·35	1·10	0·35	...	...	0 30	0·50	1·60	0·50	...
			Sarwan ...	...	...	0·83	0·32	1·83	0·02	0,05	0·12	..	0·53	0·02	...	0·45	0·26	..	0 90	1·37	1·09	1·67	0·15
			Sarath ...	...	...	...	0·20	2·08	...	0·07	...	...	0·20	1·21	0·90	0·10	...	0·00	0·25	0·10	1·70	0·36	0·05
			Barkope ...	...	...	...	2·25	0·75	0·12	0,35	0·15	0·45	0·14	..	0·90	0·90	...	0·48	0·78	1·25	0·41	0·36	...
			Bhagya ...	...	...	...	...	...	1·43	..	...	...	1·40	...	...	0·44	...	...	2·00	0·42	0·20	1·95	...
			Mohespore ...	...	...	...	...	3·46	0·86	0·18	...	...	...	0·33	1·25	...	...	...	0·84	0·98	1·00	0·33	0·05
			Hiranpur ...	...	...	0·12	0·30	6 07	...	...	...	...	1·18	...	...	...	...	0·35	1·14	0·63	0·18	0·34	0·17
			Barharwa ...	...	..	0·14	...	3·00	2·15	...	...	...	1·39	0·06	...	...	...	...	0·92	0·66	2·10	0·34	0·62
			Sahibganj ...	0·04	0·03	...	0·11	1·21	0 70	1·01	...	...	5·50	0·13	...	...	...	...	0·27	0·44	0·74	1·10	1·07
			Barie ...	0·11	...	...	2·74	...	...	...	3·12	0·07	...	...	...	...	...	...	1·11	0·78	0·22	2·55	0·46
ORISSA.	Orissa.	Cuttack ...	Jagatsingpur	0·61	...	...	0 80	...	0·34	...	...	0·40	...	...	0·11	0·20	5·00	8·03	2·73	0·20	...	0·50	...
			Banki ...	1·04	...	1·65	...	1·14	0·16	0·78	...	...	...	...	0·22	0·72	0 23	7·65	7·36	...	...	...	...
			Cuttack ...	2·11	0·09	...	...	0·13	0·31	0·09	0·07	...	...	...	0·88	0·57	2·00	6·00	1·07	0·14	...	0·15	0·12
			False Point ...	0·81	0·37	...	0·26	1·71	0·15	0·37	0·03	...	...	...	0·19	0·21	1·22	1·05	0·83	...	...	...	0·06
			Kendrapara ...	0·86	0·71	...	0·01	0 57	0·43	0·04	0 01	0·06	1·54	...	0·89	...	1·42	2·43	1·09	0·03	0·03	0·01	0·01
			Jajpur ...	1·34	0·61	...	0·20	...	0·85	0·35	0 12	0·72	...	...	0·41	...	1·90	1·44	4·02	0·02	0·06	0·40	...
			Dharmsala ...	1·37	...	0·65	0·04	0·07	0·65	...	...	...	...	...	0·45	0·35	1·25	2·50	2·37	...	...	2·37	...
			Salepur ...	0·55	0·60	...	0·51	...	0·42	0·37	0 01	0·30	0 70	...	0 34	0·21	3·20	4·68	1·19	0·08	...	0·01	0·27
		Balasore ...	Akhyapada ...	1·32	0·64	...	0·25	..	0·95	0·33	0·18	0 75	...	...	0 68	...	0·95	0·81	2·36	...	0·18	0·30	...
			Chandbali ...	1·25	0 62	0·10	..	1 58	..	0·10	...	...	...	...	0·04	...	0·45	0·42	2·54	0·10	...	0·06	...
			Bhadrak ...	1·57	1·20	1·10	1·21	0 06	0·17	0·49	...	0·15	0·17	0·13	...	..	0·63	0·48	3·92	0·25	0·71	0·73	...
			Soro ...	0 56	0·81	0·08	0·47	..	0 40	0 24	0·08	...	0·18	0 72	0·02	0·15	0·02	6·03	0·03	...	0·43	...	...
			Balasore ...	2·65	0·08	0·30	...	1·50	0·52	0·45	...	...	1·43	...	0·18	...	0·42	0·95	1·95	...	0·30	...	...
			Jellasore ...	0·61	...	2·83	0·91	2·00	0·39	0·45	0·32	...	...	...	0 07	..	0·45	0 82	1·39	0·06	0·45	...	0·05
			Haripada ...	...	...	0·90	0·18	0·80	1·52	1·58	0·58	...	0·17	...	1·67	0·13	...	0 52	2·50	...	0·07	...	...
		Angul ...	Angul ...	...	...	0·09	0·19	0·45	...	0·63	0 10	0·31	...	...	0·24	...	0·16	4·59	1·71	...	0·13	...	0·22
			Bisipara ...	0·08	0·16	0·25	0·02	0·46	...	0·80	0·75	0·03	...	...	...	...	0·11	2·03	0·96	0·08	...	0·10	0·48
			Pal Lahara ...	...	0·08	0·12	0 12	0·73	...	0·05	0·07	0·36	...	...	0 42	0·04	0·16	1·07	7·58	1·88	0·12	...	0·37
			Talcher ...	0·47	..	0·14	0·34	0·26	...	0·49	...	0·44	...	...	1·49	0·05	0·14	4·79	2·42	0·08	0·18	0·11	...
			Dhenkanal ...	...	...	0·25	...	0·50	0·60	0·13	...	...	...	0·28	0·17	0·37	7·94	3·14	0 07	0·07	0·38	0·38	1·29
			Baisinga ...	0·63	...	...	0·13	0·08	0·11	0·44	0·75	...	0·05	0·05	2·05	...	0·43	3·25	4·71	0·22	0·35	0·08	0·01
			Baramba ...	0 00	...	2·61	0·73	1·52	0·33	1 20	...	0·96	...	...	1·50	0·70	0·22	2·25	2·71	...	...	0·11	...
			Narsinapur ...	...	0·15	...	...	...	1·30	...	0·11	...	...	0·10	0·08	0·17	1·15	1·31	0·02	0·07	0·07	0·12	0·35
			Chhindipada	0·60	...	0·33	0 43	0 47	...	0·30	1·50	..	...	0·23	0·80	0·12	0·40	2 24	4·50	0·40	0·13	...	...
			Tikerpara ...	...	...	0·20	0·05	...	1·14	...	0·75	...	0·09	0·76	0·26	0·32	1·74	1·43	0·12	...	...	0·26	0·22
			Kumarkhole	2·66	..	2·16	2·00	.	.	.	.	...	...		...	...	1·10	1·32	...	0·30	0·54	0·80	0·36
		Puri ...	Puri ...	3·11	0·49	...	...	...	0·30	0·02	0·87	...	...	...	1·09	0·15	1·80	4·94	2·64	...	...	...	...
			Khurda ...	2·05	0·37	...	...	1·29	0·10	0·79	.	...	...	...	0·72	...	1·20	8·10	4 92	0·05	...	...	0·10
			Bhanpur ...	3 50	0·30	0·02	1·00	0·22	...	1·43	0·20	...	...	...	0·24	0·10	0·11	2·45	2·03	0·01	0·11	...	0·11
			Gop ...	1·47	0·88	...	...	1·54	0·06	...	0·15	0·08	...	...	0·11	0·58	3·05	5·55	1·27	...	...	...	0·07
			Satpara ...	..	3·12	0·07	...	..	0·12	0·14	1·20	...	...	...	0·50	...	0·10	5·40	1·15	0·16	...	...	...
			Pipli ...	1·59	0·39	...	..	0·36	0·22	0·08	0·07	...	...	...	0·79	0·16	0·94	7·40	2·05	0·06	...	0·01	...
			Nayagarh ...	...	0·70	...	0·50	0 10	1·22	...	...	...	...	...	...	0·18	1·38	...	0·90	...	...	...	0·48
			Banpur ...	0·37	0·20	0·18	0·31	4·13	2·33	0·19	...	...	...	...	0·30	...	0·37	4·68	3·44	..	...	...	0·25
			Kanas ...	1·07	0·30	...	...	...	...	...	...	...	...	...	1·40	...	1·92	6·55	4·37	...	0·03	...	0·15
CHOTA NAGPUR.	Chota Nagpur.	Hazaribagh ...	Pachamba (*Giridih*).	...	...	0·68	0·92	1·44	1·19	0·11	...	0 13	0·52	0·06	...	0 83	...	0·23	0·45	1·00	0·41	1·06	0·15
			Hazaribagh ...	...		0,11	0·03	0·74	0·22	...	0·03	1·14	0·16	0·30	0·43	0·04	0·21	0·23	0·59	1·04	0·24	0·95	0 03
			Barhi ...	0·25	0·04	...	1·15	0 38	0·03	...	...	...	1·48	0·24		...	0·74	...	0·01	0·29	..	2·14	0·03
			Ghatra ...	...	0·30	..	0·05	0 23	0·23	...	...	0·63	1·28	...	0·33	0·70	1·13	...	0·39	0·52	...	0·42	0·13
			Kharagdiha ...	...	...	1·50	...	...	...	...	...	...	...	...	...	...	...	...	...	1·94	0·20	0·30	...
			Ramgar ...	0·30	...	...	1·60	..	0·30	0·30	...	...	...	...	...	...	...	0·10	1·10	...	0·20	0·10	3·20
		Ranchi ..	Lohardaga ...	0·24	...	0·23	0·36	0·51	...	0·25	...	...	...	...	0·50	...	0·96	0·15	0·63	0·89	...	0·20	...
			ranch ...	...	1·10	0·22	0·91	1·76	...	0·26	...	1·50	...	...	0·16	...	0·50	0·03	0·27	2·00	0·03	0·05	0 31
			Silli ...	...	...	...	0·30	1·00	1·40	0·50	...	...	0·55	0·35	0·57	...	...	...	...	1·16	...	...	1·80
			Palkot ...	0·35	...	0·75	2·36	0 63	...	...	0·07	1·00	0·15	1·07	0·20	...	...	0·45	1·20	2·90	0·23	...	1·07
			Bano ...	...	...	1·20	...	3·30	...	...	0·20	...	...	2·05	...	...	0 20	2·20	4·30	0·30	0·30	3·00	0·00
			Tamar ...	0·52	0·06	0 36	0·50	1·40	...	...	...	...	...	...	...	1·30	...	...	1·08	2·27	...	...	...
			Kurdeg ...	...	...	...	...	...	...	...	...	...	0·88	0·92	...	1·23	1·00	1·13	3·23	0·83	0·23	0·12	2·00
			Chainpur ...	0·15	0·30	0·95	0·64	0·55	0·53	0·35	0·23	0·24	...	0·23	...	...	0·20	2·55	1·60	0·75	0·07	...	...
			Sirguja ...	..	...	...	...	...	...	...	...	...	...	...	...	...	...	...	5 06	3·00	..	4·00	4·00
			Jashpur ...	0·50	0·33	1·50	2·50	..	0·39	0 30	...	...	...	...	0·33	...	0·63	2·05	3·15	1·04	0·30	0·46	3·05
			Gangpur ..	1·10	0·10	1·50	2·08	0·40	0 05	0·30	0·30	1·20	0·03	...	...	0·40	2·40	2·20	2·45	0·20	0·25	0·66	2·23
		Palamau ..	Palamau (*Daltonganj*).	...	1·92	0·02	0·07	0 09	0·03	...	...	0·03	0 63	0 04	0·10	...	...	...	1·40	0·30	0·25	0·08	0·17
			Balumath ...	1·40	...	...	0·30	0·20	...	...	...	...	0·55	...	0·10	...	0·25	0·85	0·50	0·35	...	0·00	...
			Hussinabad ..	1·00	...	0 37	0·80	2·00	0·18	...	0 85	1·00	.	0·13	0·50	...	...	...	1·50	...	..	...	0·22
			Garhwa ...	...	2·50	...	...	0·14	0·84	...	0·18	0·10	1·12	...	...	...	...	0·31	2·32	0·55	0·21	...	0·06
			Mahuadaur ...	...	0·27	...	0·14	0·10	...	...	0·04	...	...	0·26	0·21	...	··	0 20	3·06	2·37	0·14	...	0·13
			Panki ...	...	0·20	...	...	0·55	1·00	...	...	1·80	1·36	..	0·25	...	...	...	...	1·00	...	...	1·00
			Latehar ...	0·28	1·01	0·02	0·02	1·02	...	0·50	...	1·05	0·10	...	0·45	...	0·38	0·15	1·40	0·78	0·08	0·40	0·89
			Nagarutari ...	...	0·98	0·15	0·35	0·32	2 05	1 14	...	0·20	0·13	...	...	0·06	...	0·43	1 16	1·55	0 02	0·12	0·55
			Ranka ...	...	1·50	...	...	0·15	3 50	...	...	3·00	0·45	...	0·15	...	...	0·25	1·60	1·50	...	...	0·60
			Chattarpur ...	...	0·78	...	0·25	1·36	0·22	..	0·22	...	...	...	0·47	0·09	...	...	0·09	0·52	0·28	0·26	...
		Manbhum ...	Purulia ...	0·05	..	...	0·18	4·01	0·85	0·23	0·04	0·19	...	...	0·08	0·16	..	0·02	1·76	1·42	0·02	0·19	0·34
			Gobindpur ...	...	0·25	...	0·32	1·69	0·34	1·40	0·09	0·04	...	...	0·16	0·03	...	0·03	1·05	0·98	0·14	0·17	0·20
			Raghunathpur		...	0·74	0·11	0·40	0 20	0·50	0 20	...	...	...	0·10	0·34	...	...	2·13	1·43	0·30	...	0·23
			Barabhbhum	0·25	...	...	...	3·90	0·20	2·50	0·20	0·20	...	0·44	...	...	0·14	...	5·20	0·80	...	...	0·25
			Jhalda ...	...	...	...	0 07	1·26	0·16	0·03	0·05	0 70	...	0·25	0·35	1·25	..	0·03	0·71	0·66	0·11	0·98	1·80
			Chas ...	0 21	..	...	...	1·30	0·10	0·84	...	...	...	...	0·08	...	0·15	0·28	0·92	...	1·30	...	...
			Pandra ..	...	...	...	0·06	2·74	0·12	0·55	0·10	...	...	0·70	0·10	0·06	...	...	1·95	1·38	0·30	0·30	0·68
		Singbhbum ...	Chaibasa ...	0·11	0·13	...	1·35	1·66	0·05	0·01	0·50	1·00	0·17	0·08	0·85	0·06	0·03	0·13	4·35	0·54	0·01	...	0·28
			Chakradharpur	0·80	0·11	0·60	2·93	..	0·35	0·04	...	...	0 59	..	...	...	0·07	4·85	...	...	...	0·47	5·58
			Ghatsila ..	1·14	...	...	0·59	2·59	0·35	0·70	...	0·10	0·30	0·40	...	...	0·58	0·10	0·05	0·65	...	...	...
			Baharagura ...	1·78	0 09	0·23	0·15	0·38	3·30	0·72	0 28	0·29	0·22	0·14	0·48	1·93	0·20	1·08	0·18	0·41	...	...	..
			Gailkura ...																				
			Kalikapur ...	0·16	0·47	0·10	0·96	0·46	0·18	0·47	0·39	...	...	0·30	0·56	...	...	...	5·56	2·18	...	...	...
			Monaharpur ...	0·54	1·56	..	2·70	1·15	0·25	...	0·45	...	0·69	0·75	1 24	...	..	0 45	4·35	5·30	0·10	0·05	1·32
			Kathari ...	...	0 10	...	1·30	0·30	0 19	0·21	...	1·89	0·09	...	0·71	0·35	0·07	2·04	4·30	1·38	.	...	0·30
			Serulkilla ...	0·05	0·45	...	0·84	1·30	0·01	0·47	0·23	0·30	0·18	0·30	0·86	0·09	..	0 12	7·18	0·35	0·02	...	0·20
			Kharswan ...	0·49	1·01	0·17	0 59	2·45	0·03	0·98	0·10	0 03	0·11	...	0·82	...	...	...	7·39	0·95	...	...	0·30
		Orissa Tributary Mahals.	Keonjhar ...	1·33	.	0 19	0·80	0·27	0·50	...	...	...	...	...	...	0·50	0·88	4·33	1·00	0 10	...	0·16	...
			Anandpur ...	0·83	0·25	1·77	0·10	.	0·22	0·37	0·16	...	0·35	0·20	0·31	0·11	0·10	1·40	4·21	0·45	0·12	...	...
			Kunjabongarh	...	...	0·21	0·24	1·15	...	0·17	0 08	0·41	0·42	...	0·58	0·19	0·15	1 07	1·48	...	...	0·01	0·34

in Bengal in July 1902—*concluded.*

21	22	23	24	25	26	27	28	29	30	31	Number of rainy days.	Average number of rainy days.	Total rainfall for the month.	Average rainfall for the month.	Heaviest rainfall during the month.	Total rainfall from 16th May up to 31st July 1902.	Average rainfall from 16th May up to 31st July.	Station.	District.	Division.	Meteorological Division.
1·75	1·94	...	...	0 70	0·40	0·26	0·11	0·88	2·30	0·48	18	16·00	20 72	13·40	4·50	28·21	23·39	Asansboni.	Santhal Parganas—*concld.*	Bhagalpur—*concld.*	Bihar—*concld.*
...	1·17	0·71	...	...	0·07	2·30	0·40	0·22	1·30	2·55	18	16·43	20·58	16·00	3·00	26 66	20·13	Katikund			
0·25	0·20	0·60	...	...	1·50	0·20	0·80	0·50	0·50	3·50	23	16·14	19·95	12·87	3·50	30·01	24·53	Madhupur.			
0·26	1·45	2·50	...	...	1·05	1·83	0 83	0·36	0·86	1·39	21	12·57	20·14	13·61	2·50	29·09	24·50	Sarwan.			
0·22	0·33	1·00	...	...	1·25	2·08	1·83	0 10	0·34	1·08	19	15·71	15·54	13·65	2·09	23·01	23·00	Sarath.			
...	...	...	...	...	0·07	0·45	1·20	0·10	...	1·00	18	15·87	12·80	9 51	2·25	25·27	20·76	Barkope.			
2·66	0·34	0·29	...	1·43	0·75	...	...	...	...	0·81	13	11·00	14·52	9 27	2·26	19·13	19·55	Bhagya.			
0·81	1·05	1·33	0·04	...	..	1·50	0·26	0·24	...	6·90	16	14·00	20 74	12·31	6·90	26·82	24·13	Mohespur.			
0·63	...	0·09	..	...	0·17	...	0·71	...	4·50	0·38	15	?	16·84	?	6·07	23·75	?	*Hiranpur.*			
0·06	...	0·20	0·10	...	1·07	0·30	...	0·30	0·22	3·66	17	15·86	17·99	13·58	3 66	27·79	24·19	Barharwa			
0·24	0·34	0·26	0·05	...	0·30	...	0·06	0·03	0·07	0·17	16	14·86	13·97	12·59	5·60	24·38	25·17	Sahibganj			
0·73	...	0·22	0·17	0 27	...	0·37	...	0·16	1·20	0·63	16	?	14·95	?	3·12	20·69	?	*Barlo.*			
2·00	0·12	...	...	...	1·00	5·70	...	...	...	0·55	16	13·93	28·31	12·01	8·05	31·71	22·06	Jagatsingpur	Cuttack.	Orissa.	Chota Nagpur.
0·30	0·58	...	...	...	1·40	1·15	0·22	0·23	1·52	...	17	15·28	26·40	10·86	7·65	35·04	22·35	Banki.			
1·38	0·66	...	0·22	0·16	3·16	3·43	0·23	0·05	1·17	...	19	16·13	25 79	12·06	6·90	34·40	25·79	Cuttack.			
1·83	0·52	...	...	...	1·08	4·26	0·05	...	...	0·05	15	14·90	15·64	13·68	4·26	19·19	26·09	False Point.			
1·70	0·27	...	...	0·11	0·88	4·01	0·20	0·26	...	...	16	14·03	18·40	11·85	4·01	25·16	24·34	Kendrapara			
0·80	1·29	1·83	...	...	0·44	1·69	0·82	1·17	0·73	...	20	14·50	21·20	12·73	4·02	27·75	26·10	Jajpur.			
1·50	0·99	...	...	0·81	3·07	0·60	...	0·84	...	...	15	15·13	19·88	11·69	3·07	26·05	25 84	Dharmsala.			
0·06	0·48	...	...	...	0·60	4·22	0·23	0·10	0 30	...	20	14·40	20·09	10·21	4·68	24·39	23·95	Salepur.			
0·65	1·32	0·29	...	...	0·18	1·80	0·70	0·10	0·49	...	21	13·03	15·08	10·88	2·46	18·77	23 71	Akhyapada	Balasore.		
1·80	1·38	...	0·02	...	...	2·40	0·63	0·22	...	0·04	14	13·50	13·48	12·24	2·54	22·71	23·33	Chandbali.			
0·03	1·55	0·45	...	...	0·25	2·07	0·50	...	1·34	0·22	22	13·84	19·23	12·15	3·92	27·16	25·30	Bhadrak			
0·45	0·27	0·11	...	...	0·65	2·15	1·21	...	2·07	...	17	14 04	16·86	11·73	6·03	26·07	23·46	Soro.			
0·22	0·20	...	...	...	1·40	2·82	1 75	0·25	1·15	0·10	19	14·94	17 71	11·77	2·65	23 63	25·33	Balasore.			
0·21	0·02	0·35	...	0·03	0·11	6·61	0·95	0·23	0·57	1·00	20	14·25	20 88	13·31	6·61	27·38	24·60	Jellasore.			
...	0·50	...	...	...	...	3 60	2·71	0·57	0·04	0·90	16	17·50	19·03	12·99	3·60	28·83	26·42	Baripada			
0·05	1·38	...	..	2·45	...	1·95	0·49	0·23	1·66	0·05	17	15·00	17·28	10·07	4·59	21·61	22·52	Angul	Angul.		
0·75	0 68	0·13	...	0·02	3·70	0·36	0·10	0·12	0·16	...	17	16·50	13·23	13·37	3·70	15·02	24·28	Bisalpara.			
0·54	2·42	·76	0·12	0·23	0·14	11·36	2·08	0·08	0·16	0·14	22	18·44	31·75	22·36	11·36	37·40	35·28	Pal Lahara.			
0·31	3·67	2·89	...	...	0·08	3·64	0·37	0·43	...	...	18	15·70	23·99	13·42	4·79	30·37	24·63	Talchar.			
0·90	...	...	...	3·70	2·63	0·40	0·10	0·60	...	...	18	16·50	23·84	12 93	7·94	33·87	25·38	Dhenkanal			
0·32	2·87	0·15	0·07	..	0·20	4·20	0·47	0·07	0·69	0·05	18	?	22·38	?	4·71	32·11	?	*Bausinga.*			
0·20	0·65	...	...	0·05	0·56	0·04	0·11	...	1·28	...	18	15·50	18·82	10·74	2·71	25·40	22 13	Baramba			
0·53	...	0·05	0·18	0·27	0·88	0·16	0·10	0·50	0·02	...	16	14·50	7·68	9·63	1·32	11·05	10 91	Narasinghpur			
0·13	3·85	...	...	...	0·80	2·30	1·50	0·42	...	...	20	?	21·25	?	4·50	25·56	?	*Chhendipadah*			
0·47	...	...	2·34	0·02	0·46	0·05	0·04	0·12	0·04	...	16	?	11·84	?	2·34	16·31	?	*Tikerpara.*			
0·93	...	0·36	4 87	...	0·41	0·10	0·10	...	...	...	15	?	18·01	?	4·87	10·08	?	*Kumarkhole.*			
0·79	0·37	...	...	...	0·65	2·21	0·01	...	...	...	13	11·74	19·34	9·06	4·94	23·51	19·94	Puri	Puri.		
1·18	0·74	...	0·10	0·27	2·50	1·20	...	...	...	1·46	17	16·26	27·34	15·83	8·10	37·04	24 28	Khurda.			
1·00	0·40	...	0·15	0·19	1·37	0·63	0·06	...	0·05	0·02	19	12·68	15·60	10 02	3·50	21·58	19·26	Bhanpur.			
2·00	0·56	0·05	...	...	0·47	1·57	0 03	...	...	...	15	12·80	19·78	10·98	5·85	25·22	21·14	Gop.			
0·92	0·29	...	...	...	2·02	0·98	...	...	...	0·03	13	8·91	14·86	6·23	3·46	19·59	16 80	Satpara.			
1·31	0·84	...	...	...	1·34	1·56	0·08	...	0·21	...	14	13·43	19·46	11·56	7·40	25·99	22·18	Pipli.			
0·80	...	0·50	1·54	3·16	0·90	0·10	...	0·70	...	0·11	16	14·00	13·15	14·44	3·16	21·14	25·27	Nayagarh.			
1·00	0·79	...	0·15	1·43	1·98	1·00	...	0·15	0·17	0·18	21	15·13	23·76	11·25	4·08	27·00	22·19	Ranpur.			
1·35	0·52	...	...	...	3·87	1·05	...	...	...	0·30	12	?	23·80	?	6·55	30·08	?	*Kanas.*			
1·42	1·60	0·54	0·23	1·50	1·90	0·20	1·24	0·42	1·69	1·30	25	18·83	21·22	13·99	1·90	27·04	23·32	Pachamba (*Giridih*).	Hazaribagh.	Chota Nagpur.	
0·85	0·26	0·03	0·42	0·78	2·41	0·13	1·03	1·19	0·07	0·39	22	18·74	14·14	13·62	2·41	18·62	23·60	Hazaribagh.			
1·21	0·18	...	...	0·59	2·32	...	0·92	...	...	...	14	15·83	12·90	13·47	2·32	17·31	21 65	Barhi.			
0·31	0·09	...	...	0·40	3·21	0·23	1·04	1·04	...	0·54	19	17·33	13·25	16·22	3·21	14·90	26·13	Chatra.			
2·00	...	0·72	...	...	1·19	1·40	0·43	0·96	0·50	2·30	19	15·53	13·43	14·88	2·30	16·43	25·23	Kharaudiha.			
1·20	...	...	...	1·20	..	1·10	0·30	...	...	...	13	14·43	10·80	14·78	3·10	14·85	24·09	Ramgar.			
3·00	0·15	...	0·65	1·43	5·10	0·41	0·94	0·28	0·15	0·43	21	17·50	17·18	12·51	5·10	20·70	22·10	Lohardaga	Ranchi.		
...	1·72	0·05	...	...	3·00	0·30	1·10	1·41	0·03	...	18	19·10	16·52	13·20	3·00	19·22	22·97	Ranchi.			
2·07	...	...	...	0·70	0·20	0·20	0·50	0·60	...	...	15	14·64	11·90	13·27	2·07	14·25	23 65	Silli.			
2·35	2·34	0·55	0·97	1·25	1·07	0 10	0·72	0·07	0·99	0·48	22	17·14	22·31	18·64	2 90	24 06	30·99	Palkot.			
2·20	0·32	...	...	3·41	1·07	7·00	1·17	1·00	...	...	18	?	30·22	?	7·00	44·56	?	*Bano.*			
0·70	...	...	...	...	1·90	0·30	2·40	...	...	...	11	16·14	13·79	13·10	2·40	17·01	26·72	Tamar.			
0·31	0·24	...	0·30	0·80	0·10	0·30	0·68	0·27	...	...		?	?	?			?	*Kurdag.*			
0·75	1·28	1·40	0·30	1·25	0·15	0·09	0·12	...	...	...	21	17·43	14·64	15·55	2·50	17·10	23·73	Chainpur.			
0·30	2·30	...	2·00	3·50	...	...	...	3·90	...	...	9	20·33	27·20	18·41	5·00	30·00	29·03	Sirguja.			
0·88	0·40	0·08	1·30	1·50	0·40	0·52	0·47	0·26	1·23	...	23	21·79	25·47	16·11	3·15	?	28·45	Jashpur.			
...	0·22	0·03	0·05	1·40	0·58	0·20	0·32	0·95	...	...	22	18·78	21·60	17·53	3·45	23·56	28·31	Gangpur.			
0·34	0·01	0·02	0·07	0·16	1·22	0·50	0·43	0·28	0·01	...	15	16 16	9·80	12·51	1·92	10·20	19·42	Palamau (*Daltonganj*)	Palamau.		
0·80	...	...	...	0·85	5·05	0·54	4·40	...	...	0·65	15	17·33	16·54	14·00	5·05	17·94	23·30	Balumath.			
...	...	...	...	...	3·20	2·07	0·50	0·50	...	0·36	17	15·07	16·40	16·48	3·20	16·88	23·64	Husainabad.			
0·71	0·08	...	...	0·17	1·06	0·48	0·74	0·57	...	...	15	15·47	11·83	13·39	2·59	12·59	19·17	Garhwa.			
0·83	0·07	...	...	0·80	1·74	0·11	0·63	0·69	...	0·14	18	?	13·62	?	3·06	14·39	?	*Mahuadanr.*			
1·00	...	...	...	1·00	3·80	1·95	2·15	0·55	0·15	0·20	17	?	17·45	?	3 80	19·45	?	*Panki.*			
2·20	...	...	...	0·64	4·15	1·26	0·55	0·28	0·10	0·70	22	?	19·68	?	4·15	22·68	?	*Latehar.*			
1·84	0·02	...	0·31	0·14	0·69	0·33	0·90	0·67	0·33	0·05	21	?	14·45	?	2·06	15 58	?	*Nagarutari.*			
1·75	...	...	...	..	2·50	0·50	0·50	0·75	...	...	15	?	15 70	?	3·50	21·45	?	*Ranka.*			
0·40	...	...	...	...	4·65	1·88	2·00	0·40	...	...	15	?	17·45	?	4·65	20·27	?	*Chattarpur.*			
0·35	0·35	...	...	0·09	0·50	0·30	1·21	0·02	0·05	0·01	15	17·42	11·95	12·23	4·01	17·39	24·28	Purulia ..	Manbhum.		
0·08	0·36	0·50	...	...	1·13	0·09	1·88	0·31	0·41	0·46	18	18·10	11·79	14·19	1·68	15·19	25·11	Gobindpur.			
0·24	1·10	...	...	...	0·63	0·53	0·55	0·45	0·90	...	19	16·33	11·08	13·25	2·18	19·09	23·74	Raghunathpur.			
...	...	...	...	...	0·45	0·13	3·00	0·60	...	...	15	16·50	18·35	12·62	5·20	22 42	25·70	Barabhabhum.			
1·35	...	...	...	...	1·72	0·08	1·35	0·47	...	...	15	13·80	12·10	12·56	1·72	16·84	24·45	Jhalda.			
0·10	...	...	...	...	2·00	...	1·50	0·50	...	0·45	13	15·73	9 33	13·13	2·00	13·13	12·13	Chas.			
0·05	0·83	0·20	...	0·02	1·40	...	2·36	0·37	2·05	1·36	19	16·22	15·38	12·51	2·95	24·33	25·04	Pandra.			
3·56	0·23	0·04	...	...	0·40	0·70	3·70	0·95	0·06	...	18	16·68	20·73	13·40	4·35	26·46	24·05	Chaibasa	Singhbhum.		
0·20	...	...	..	0·40	0·68	3·12	...	...	...	...	14	16·14	20·79	13·86	5·38	28·22	24·83	Chakradharpur.			
0·42	0·05	...	...	..	...	0·50	0·79	...	0·30	...	16	15·33	9·42	12·92	2·59	14·13	26·08	Ghatsila.			
...	...	0·12	0·23	1·03	0·03	1·03	0·51	0·43	...	0·47	24	14·47	16·39	11·75	3·30	20·42	24·02	Baharagura.			
												17·88		17·10			27·07	Gailkura.			
...	...	...	...	0·16	0·10	3·96	1·10	0·17	0·10	...	18	16·38	17·36	14·38	5·56	25·27	33·50	Kalikapur.			
5·30	0·25	0 32	1·45	2·30	0·87	0·70	6·76	0·42	0·16	0·20	25	18·71	39·48	22·17	6·76	43·91	34·34	Monoharpur.			
...	...	...	...	...	0·25	1·24	3·15	1·19	...	...	16	?	19·05	?	4·39	25·56	?	*Katbari.*			
1·71	0·08	0·47	...	..	0·34	0·33	1·68	1·18	0·01	...	19	?	19·13	?	7·18	20·15	?	*Seraikella.*			
1·56	0·08	...	...	...	0·33	0·60	1·84	...	0·07	...	16	?	19·90	?	7·39	25·54	?	*Kharswan.*			
1·50	...	...	...	...	1·15	2·20	0·32	...	0·07	...	15	13·74	15·39	10·46	4·33	22·91	18·45	Keonjhar ...	Orissa Tributary Mahals.		
...	1·05	0·05	...	0·05	...	1·32	1·20	0·05	...	...	19	14·38	15·10	12·29	4·24	22·02	24·81	Anandpur.			
0·60	0·71	0·05	0·83	2·12	0·62	0·72	0·07	0·00	0 73	0·10	20	14 30	13·11	11·20	2·42	17·89	21·03	Kunjabongarh.			

Table of Rainfall recorded at stations

Meteorological Division.	Division.	District.	Station.	1	2	3	4	5	6	7	8	9	10	11	12	13	14	15	16	17	18	19	20
BIHAR—*concld.*	Bhagalpur—*concld.*	Sonthal Parganas—*concld.*	Asansoni	...	0·48	...	4·30	1·89	...	...	...	...	...	0·45	...	0·35	...	0·20	0·08	2·39	0·59	0·09	...
			Katikund	...	...	...	..	3·00	1·13	0·01	..	..	...	0·85	0·10	0·86	0·60	...	1·00	1·45	2·50	0·50	0·26
			Madhupur	...	...	1·42	0·30	2·80	0·95	0·45	0·10	...	0·20	1·35	1·10	0·35	...	...	0·30	0·50	1·60	0·50	...
			Sarwan	...	...	0·83	0·32	1·82	0·02	0·05	0·12	..	0·53	0·02	..	0·45	0·26	...	0·90	1·37	1·09	1·67	0·15
			Sarath	...	...	...	0·20	2·08	...	0·07	...	...	0·20	1·21	0·90	0·10	...	0·00	0·25	0·10	1·70	0·36	0·05
			Barkope	...	...	...	...	2·25	0·75	0·12	0·35	0·15	0·45	0·14	...	0·90	0·90	...	0·48	0·74	1·25	0·41	0·36	...
			Bhagya	...	...	...	...	...	...	1·43	...	...	...	1·40	...	...	0·44	...	...	2·00	0·52	0·20	1·95	...
			Mohespore	...	...	...	...	...	3·46	0·86	0·18	...	...	...	0·33	1·25	...	...	...	0·21	0·98	1·00	0·22	0·05
			Hiranpur	...	...	...	0·12	0·30	6·07	...	...	...	...	1·18	...	...	...	...	0·35	1·14	0·63	0·16	0·34	0·17
			Barharwa	...	...	...	0·14	..	3·00	2·15	...	...	...	1·29	0·06	...	...	...	...	0·92	0·66	2·10	0·24	0·02
			Sahibganj	...	0·04	0·03	...	0·11	1·21	0 70	1·01	...	...	5·40	0·13	...	...	...	...	0·27	0·44	0·74	1·10	1·07
			Bario	...	0·11	...	...	2·74	...	...	...	3·12	0·07	...	...	...	...	...	...	1·11	0·78	0·22	2·55	0·45
ORISSA.	Orissa.	Cuttack	Jagatsingpur	0·61	...	...	0·80	..	0·34	...	...	0·40	...	...	0·11	0·20	5·00	8·03	2·73	0·20	...	0·50	...
			Banki	1·04	...	1·65	...	1·14	0·10	0·78	...	...	...	...	0·22	0·72	0 28	7·85	7·36	...	...	...	...
			Cuttack	2·11	0·09	...	...	0·15	0·21	9·09	0·07	...	...	...	0·88	0·57	2·90	6·90	1·07	0·14	...	0·15	0·12
			Paise Point	0·81	0·37	...	0·26	1·71	0·15	0·37	0·04	...	...	...	0·19	0·21	1·22	1·65	0·82	...	...	...	0·06
			Kendrapara	0·86	0·71	...	0·01	0 87	0·43	0·04	0·01	0·06	1·54	...	0·89	...	1·42	2 43	1·09	0·03	0·02	0·01	0·01
			Jajpur	1·34	0·61	...	0·20	...	0·83	0·35	0 12	0·72	...	...	0·41	...	1·90	1·44	4·02	0·02	0·06	0·40	...
			Dharmsala	1·37	...	0·65	0·04	0·07	0·65	...	...	...	...	...	0·45	0·35	1·25	2·50	2·37	...	...	2·37	...
			Salepur	0·55	0·60	...	0·51	...	0·42	0·27	0 01	0·20	0 70	...	0 34	0·24	3·29	4·68	1·19	0·02	...	0·01	0·27
		Balasore	Akhyapada	1·32	0·64	...	0·25	...	0·95	0·33	0·18	0 75	...	..	0 65	...	0·95	0·81	2·36	...	0·18	0·50	...
			Chandbali	1·25	0 62	0·10	..	1 83	...	0·10	...	...	...	...	0·04	...	0·38	0·42	2·54	0·10	...	0·06	...
			Bhadrak	1·37	1·20	1·10	1·31	0·06	0·17	0·49	...	0·15	0·17	0·13	...	...	0·63	0·43	3·02	0·25	0·71	0·73	...
			Soro	0 56	0·51	0·08	0·47	...	0 49	0 21	0·08	...	0·18	0 72	0·02	0·15	0·02	6·03	0·06	...	0·43	...	...
			Balasore	2·65	0·08	0 30	...	1·50	0·52	0·45	...	...	1·42	...	0·18	...	0·42	0·25	1·95	...	0·30	...	...
			Jellasore	0·61	...	2 85	0·31	2·00	0·39	0·45	0·32	...	...	...	0 07	..	0·45	0 82	1·39	0·06	0·45	...	0·05
			Baripada	...	...	...	0·90	0·18	0·80	1·52	1·58	0·88	...	0·17	...	1·67	0·13	...	0·52	2·50	...	0·07	...	...
		Angul	Angul	...	...	...	0·09	0·40	0·45	...	0·63	0 10	0·31	...	...	0·24	...	0·10	4·59	1·71	...	0·13	...	0·22
			Bisipara	0·08	0·16	0·25	0·02	0·40	...	0·80	0·75	0·03	...	...	...	...	0·11	2·03	0·96	0·08	...	0·10	0·48
			Pal Lahara	...	0·08	0·12	0 12	0·73	...	0·05	0·07	0·30	...	...	0 42	0·64	0·16	1·07	7·88	1·88	0·12	...	0·37
			Talcher	0·47	..	0·14	0·34	0·26	...	0·49	...	0·44	...	...	1·40	0·05	0·14	4·79	2·42	0·08	0·18	0·11	...
			Dhenkanal	...	...	0·25	...	0·50	0·60	0·24	...	...	...	0·26	0·17	0·37	7·94	3·14	0 07	0·07	0·28	0·28	1·29
			Raisinga	0 63	...	...	0·13	0·08	0·11	0·44	0·75	...	0·05	0·05	2·05	...	0·43	3·25	4 71	0·22	0·35	0·03	0·01
			Baramba	0·09	...	2·61	0·73	1·82	0·33	1 30	...	0·90	...	...	1·50	0·70	0 22	3 26	2·71	...	...	0·11	...
			Narsinapur	...	0·15	...	...	...	1·30	...	0·11	...	...	0·10	0·06	0·17	1·15	1·32	0 02	0·07	0·07	0·12	0·35
			Chhindipada	0·60	...	0·33	0·43	0 47	...	0·30	1·50	...	...	0·23	0·60	0·12	0·40	3·24	4·50	0·40	0·13	...	...
			Tikerpara	...	...	0·26	0·05	...	1·14	...	0·75	...	0·09	0·76	0·26	0·32	1·74	1·45	0·13	...	...	0·26	0·22
			Kumarkhole	2·66	.	2·16	2·00	.	.	.	.	...	...	.	.	..	1·10	1·32	...	0·30	0·54	0·80	0·36
		Puri	Puri	3·11	0·49	...	...	...	0·30	0·02	0·87	...	...	...	1·09	0·15	1·80	4·94	2·64	...	...	...	...
			Khurda	2·05	0·27	...	...	1·29	0·10	0·79	.	...	...	...	0·72	...	1·70	3·10	4 92	0·05	...	...	0·10
			Bhanpur	3 50	0·20	0·02	1·00	0·22	...	1·43	0·20	...	...	...	0·24	0·10	0·11	2·45	2·03	0·01	0·11	...	0·11
			Gop	1·47	0·88	...	...	1·54	0·06	...	0·15	0·08	...	...	0·11	0·58	3·05	5·55	1·27	...	...	...	0·07
			Satpara	...	3·12	0·07	...	..	0·12	0·14	1·20	...	...	...	0·50	...	0·10	3·40	1·15	0·16	...	...	...
			Pipli	1·59	0·39	...	...	0·36	0·22	0·08	0·07	...	...	...	0·79	0·16	0·94	7·40	2·05	0·06	...	0·01	...
			Nayagarh	...	0·70	...	0·50	0·10	1·22	...	...	...	...	...	...	0·18	1·36	...	0·90	...	...	...	0·48
			Ranpur	0·57	0·20	0·18	0·32	4·13	2·33	0·16	...	...	...	...	0·30	...	0·87	4·68	3·44	...	...	...	0·25
			Kanas	1·97	0·30	...	...	...	...	...	...	...	...	...	1·40	...	1·92	6·55	4·37	...	0·03	...	0·15
CHOTA NAGPUR.	Chhota Nagpur.	Hazaribagh	Pachamba (*Giridih*).	...	...	0·68	0·93	1·44	1·19	0·11	...	0 13	0·52	0·06	...	0 63	...	0·23	0·48	1·00	0·41	1·06	0·15
			Hazaribagh	...	.	0,11	0·03	0·74	0·22	...	0·03	1·14	0·16	0·29	0·43	0·04	0·21	0·23	0·59	1·04	0·24	0·95	0 03
			Barhi	0·21	0·04	...	1·16	0 38	0·03	...	...	...	1·48	0·24	...	...	0·74	...	0·01	0·29	..	2·14	0·03
			Chatra	...	0·30	...	0·05	0 23	0·23	...	...	0·63	1·28	...	0·33	0·70	1·13	...	0·39	0·82	...	0·42	0·13
			Kharagdiha	...	...	1·80	...	...	...	...	...	...	...	...	...	...	...	...	...	1·94	0·20	0·80	...
			Bamgar	0·30	...	...	1·60	..	0·30	0·20	...	...	...	...	...	...	...	0·10	1·10	...	0·20	0·10	3·10
		Ranchi	Lohardaga	0·24	...	0·23	0·36	0·81	...	0·25	...	...	...	...	0·50	...	0·96	0·15	0·63	0·62	...	0·20	...
			ranch	...	1·10	0·22	0·92	1·76	...	0·20	...	1·30	...	...	0·16	...	0·50	0·03	0·27	2·00	0·03	0·05	0 31
			Silli	...	...	...	0·30	1·09	1·40	0·50	..	...	0·55	0·35	0·57	...	...	...	...	1·16	..	...	1·30
			Palkot	0·35	...	0·75	2·36	0 63	...	...	0·07	1·00	0·15	1·07	0·20	...	...	0·45	1·20	2·90	0·25	...	1·07
			Bano	...	...	1·20	...	3 30	...	...	0·20	...	...	2·05	...	...	0 20	2·20	4·30	0·30	0·30	3·00	6·00
			Tamar	0·52	0·06	0 36	0·50	1·40	...	..	..	...	...	...	...	...	1·30	...	1·08	2·27	...	...	...
			Kurdeg	...	...	...	...	...	...	...	...	...	0·88	0·92	...	1·22	1·00	1·15	3·23	0·83	0·23	0·12	2·00
			Chaimpur	...	0·15	0·30	0·95	0·64	0 55	0·53	0·25	0·29	0·24	...	0·22	...	...	0·26	2·50	1·60	0·75	0·07	...	...
			Sirguja	...	..	...	...	...	..	...	...	...	...	...	...	...	...	...	...	5·00	3·00	.	4·00	4·00
			Jashpur	...	0·50	0·33	1·50	2·10	.	0·39	0 90	...	...	...	...	...	0 93	...	0·65	2·05	3·15	1·04	0·20	0 46	3·05
			Gangpur	..	1·10	0·10	1·50	2·08	0·40	0 03	0·30	0·30	1·20	0·03	...	...	0·40	2·40	2·20	2·45	0·20	0·25	0·66	2·23
		Palamau	Palamau (*Daltonganj*).	...	1·23	0·02	0·07	0·09	0·64	...	...	0·93	0 63	0 04	0·10	...	...	...	1·49	0·30	0·25	0·08	0·17
			Balumath	1·40	...	...	0·30	0·90	...	...	...	...	0·55	...	0·10	...	0·25	0·85	0·50	0·35	...	0·60	...
			Hussainabad	1·00	...	0 37	0 80	2·00	0·48	...	0 85	1·00	...	0·13	0·50	...	...	...	1·50	...	..	...	0·29
			Garhwa	...	...	2·50	...	...	0·14	0·84	...	0·18	0·10	1·12	...	...	...	...	2·32	0·55	0·21	...	0·06
			Mahuadaur	...	...	0·27	...	0·14	0·16	...	...	0·04	...	...	0·36	...	0·21	...	0·92	0 20	3·06	2·37	0·14	...	0·13
			Panki	...	...	0·20	...	...	0·55	1·00	...	...	1·80	1·35	..	...	0·25	...	...	...	...	1·00	...	1·00
			Latehar	...	0·28	1·01	0·02	0·09	1·62	...	0·59	...	1·05	0·10	...	...	0·45	...	0·38	0·15	1·40	0·78	0·08	0·40	0·59
			Nayarutari	...	...	0·93	0·15	0·35	0·32	2 06	1 14	...	0·20	0·13	...	...	...	0·06	...	0·43	1 16	1·55	0 02	0·13	0·55
			Ranka	...	...	1·50	...	...	0·15	3 50	...	...	3·00	0·45	...	...	0·15	...	...	0·25	1·09	1·50	..	...	0·90
			Chattargur	...	...	0·76	...	0·25	1·36	0·92	..	0·92	...	...	...	...	0·47	0·09	..	...	0·99	0·52	0·98	0·26	...
		Manbhum	Purulia	0·05	..	...	...	0·18	4·01	0·33	0·23	0·04	0·19	...	...	...	0·08	0·16	...	0·02	1·78	1·42	0·02	0·19	0·34
			Gobindpur	..	...	0·24	...	0·32	1·65	0·54	1·40	0·09	0·04	...	...	...	0·16	0·03	...	0·03	1·05	0·98	0·14	0·17	0·20
			Raghunathpur		...	...	0·74	0·11	0·40	0 20	0·50	0 20	...	...	...	...	0·10	0·34	...	...	2·13	1·43	0·30	...	0·23
			Barabhubum	0·25	...	...	...	...	3·90	0·20	2·50	0·20	0·21	...	0·44	...	...	..	0·14	...	5 20	0·80	...	...	0·25
			Jhalda	...	...	...	...	0·07	1·26	0·16	0·03	0·05	0 70	...	0·35	0·35	1·25	...	0·03	0·71	0·66	0·11	0·26	1·30
			Chas	...	0 21	..	...	...	1·30	0·10	0·34	...	...	...	...	0·08	...	0·15	0·28	0·92	...	1·30	...	...
			Pandra	..	...	...	...	0·66	2·74	0·12	0·25	0·10	...	...	0·70	0·10	0·06	...	...	1·95	1·38	0·30	0·30	0·68
		Singhbhum	Chaibasa	...	0 11	0·13	...	1·35	1·66	0·05	0·01	0·30	1·00	0·17	0·08	0·65	0·06	0·03	0·13	4·35	0·54	0·01	...	0·38
			Chakradharpur	0·80	0·11	0·60	2·03	...	0·25	0·04	...	...	0 59	...	...	...	0·07	4·55	...	...	...	0·47	5·38
			Ghatsila	1·14	...	..	0·50	2·59	0·25	0·70	..	0·10	0·30	0·40	...	..	0·58	0·10	0·05	0·65	...	...	...
			Baharagura	1·76	0 09	0·23	0·15	0·38	3·30	0·72	0 28	0·29	0·22	0·14	0·48	1·03	0·20	1·08	0·18	0·41	...	...	...
			Gulikura	...																			
			Kalikapur	0·16	0·47	0·10	0·96	0·46	0·18	0·47	0·39	...	...	0·30	0·56	...	...	...	5·56	2·16	...	...	...
			Monoharpur	0·54	1·56	..	2·70	1·15	0·25	..	0·45	...	0·60	0·75	1·24	..	0 45	4·30	5·30	0·10	0·05	1·32	
			Kathari	...	0 10	...	1·20	0·30	0 19	0·31	...	1·89	0·09	...	0·71	0·35	0·07	2·04	4·39	1·38	.	...	0·30	
			Serulbilla	...	0·05	0·45	...	0·84	1·30	0·01	0·47	0·21	0·39	0·18	0·30	0·86	0·09	..	0 12	7·18	0·35	0·02	...	0·20	
			Kharswan	...	0·49	1·01	0·17	0 59	2·45	0·03	0·98	0·10	0 03	0·11	...	0·82	...	...	...	7·39	0·95	...	...	0·80	
		Orissa Tributary Mahals.	Keonjhar	1·33	.	0 19	0·80	0·27	0·50	...	...	...	...	...	...	0·50	0·88	4·83	1·00	0 10	...	0·10	...
			Anandpur	0·83	0·25	1·77	0·10	.	0·22	0·27	0·16	...	0·95	0 20	0·81	0·11	0·10	1·40	4·25	0·45	0·13	..	...
			Kunjabongath	...	...	0·21	0·24	1·15	...	0·17	0 08	0·41	0·42	...	0·58	0·19	0·15	1 07	1·48	...	...	0·01	0·34

in Bengal in July 1902—*concluded.*

21	22	23	24	25	26	27	28	29	30	31	Number of rainy days.	Average number of rainy days.	Total rainfall for the month.	Average rainfall for the month.	Heaviest rainfall during the month.	Total rainfall from 16th May up to 31st July 1902.	Average rainfall from 16th May up to 31st July.	Station.	District.	Division.	Meteorological Division.
1·75	1·94	...	...	0·70	0·40	0·26	0·11	0·88	2·30	0·48	18	16·00	20·72	13·40	4·30	28·21	23·39	Asseuboni.	Sonthal Parganas—*concld.*	Bhagalpur—*concld.*	Bihar—*concld.*
...	1·17	0·71	...	...	0·07	2·30	0·40	0·22	1·30	2·55	18	16·43	20·53	16·00	3·00	29·66	29·13	Katikund			
0·35	0·20	0·60	...	...	1·50	0·20	0·80	0·50	0·50	3·50	23	16·14	19·95	12·87	3·50	30·01	24·53	Madhupur.			
0·26	1·45	2·50	...	...	1·05	1·83	0 83	0·36	0·86	1·39	21	12·57	20·14	12·61	2·50	29·09	24·80	Sarwan.			
0·28	0·33	1·00	...	...	1·25	2·08	1·83	0 10	0·34	1·08	19	15·71	15·54	13·65	3·08	23·01	23·00	Sarath.			
...	...	...	...	..	0·07	0·45	1·29	0·10	...	1·60	18	15·67	13·80	9 81	2·25	25·27	20·76	Harkope.			
2·66	0·34	0·29	...	1·43	0·78	...	...	...	...	0·81	18	11·00	14·52	9·27	2·26	19·12	19·55	Bhagya.			
0·31	1·05	1·33	0·04	...	.	1·56	0·26	0·24	...	6·90	16	14·00	20 74	12·31	6·90	26·82	24·18	Mohespur.			
0·65	...	0·09	...	...	0·17	...	0·71	...	4·50	0·38	15	?	16·84	?	6·07	23·75	?	*Hiranpur.*			
0·96	...	0·20	0·10	...	1·07	0·30	...	0·30	0·23	3·06	17	15·86	17·99	13·58	3 64	27·79	24·19	Barherwa			
0·24	0·34	0·26	0·05	...	0·30	...	0·06	0·03	0·07	0·17	16	14·86	13·97	12·59	5·80	24·38	25·17	Sahibganj			
0·78	...	0·22	0·17	0 27	...	0·87	...	0·16	1·26	0·03	16	?	14·95	?	3·12	20·69	?	*Bario.*			
3·00	0·12	...	...	...	1·00	5·70	...	...	...	0·55	16	13·93	28·31	13·01	8·05	31·71	22·00	Jagatsingpur	Cuttack.	Orissa.	Chota Nagpur.
0·30	0·58	...	...	...	1·40	1·15	0·22	0·23	1·52	...	17	15·28	26·40	10·86	7·65	35·04	22·35	Banki.			
1·38	0·56	...	0·22	0·16	3·16	3·43	0·23	0·05	1·17	...	19	16·13	25 79	12·06	6·90	34·40	25·70	Cuttack.			
1·83	0·52	...	...	...	1·08	4·26	0·05	...	...	0·05	15	14·90	15·64	13·68	4·26	19·19	20·00	False Point.			
1·70	0·27	...	...	0·11	0·88	4·01	0·20	0·26	...	...	10	14·03	18·40	11·85	4·91	25·16	24·34	Kendrapara			
0·80	1·29	1·88	...	...	0·44	1·63	0·82	1·17	0·72	...	20	14·50	21·20	12·73	4·02	27·75	26·10	Jajpur.			
1·50	0·99	...	...	0·81	3·07	0·60	...	0·84	...	...	15	15·13	19·88	11·69	3·07	26·65	25 84	Dharmsala.			
0·96	0·48	...	...	...	0·60	4·22	0·22	0·10	0 30	...	20	14·40	20·09	10·21	4·68	24·39	23·95	Salepur.			
0·65	1·22	0·29	...	...	0·18	1·80	0·70	0·10	0·49	...	21	13·63	15·08	10·88	2·36	18·77	23·71	Akhyapada	Balasore.		
1·80	1·38	...	0·02	...	...	2·40	0·63	0·22	...	0·04	14	13·60	13·48	12·24	2·54	22·71	23·63	Chandbali.			
0·03	1·55	0·45	...	...	0·25	2·07	0·50	...	1·34	0·22	22	13·84	19·23	12·15	3·92	27·16	25·50	Bhadrak			
0·45	0·27	0·11	...	...	0·65	2·15	1·21	...	2·07	...	17	14·04	16·80	11·73	6·03	26·07	23·45	Soro.			
0·23	0·30	...	...	...	1·40	2·62	1 75	0·25	1·15	0·10	19	14·94	17 71	11·77	2·95	23 63	25·33	Balasore.			
0·21	0·62	0·35	...	0·03	0·11	6·61	0·95	0·23	0·57	1·00	20	14·25	20 88	13·31	6·61	27·38	24·66	Jellasore			
...	0·59	...	...	...	...	3 60	2·71	0·57	0·04	0·90	16	17·50	19·03	12·89	3·60	29·83	26·42	Baripada			
0·05	1·38	...	...	2·45	...	1·95	0·49	0·23	1·66	0·05	17	15·00	17·28	10·07	4·59	21·61	22·52	Angul	Angul ...		
0·75	0 68	0·13	...	0·02	3·70	0·36	0·10	0·12	0·06	...	17	16·80	13·23	13·27	3·70	15·02	24·28	Bisipara.			
0·54	2·42	0·76	0·12	0·23	0·14	11·36	2·08	0·08	0·16	0·14	22	18·44	31·75	22·36	11·36	37·40	35·28	Pal Lahara.			
0·31	3·87	2·39	...	...	0·08	3·64	0·37	0·43	...	...	18	15·70	28·99	13·42	4·79	29·27	24·03	Talcher.			
0·90	...	...	...	3·70	2·63	0·40	0·10	0·69	...	...	18	16·50	23·84	12 92	7·04	33·87	25·38	Dhenkanal.			
9·32	2·87	0·15	0·07	...	0·20	4·20	0·47	0·07	0·69	0·05	18	?	22·38	?	4·71	32·11	?	*Bossinga.*			
0·20	0·65	...	...	0·05	0·56	0·94	0·11	...	1·98	...	18	15·50	18·62	10·74	2·71	25·40	22 13	Baramba			
0·53	...	0·05	0·18	0·27	0·88	0·16	0·10	0·80	0·02	...	16	14·80	7·68	9·03	1·32	14·05	19 91	Narsingpur			
0·13	3·85	...	...	...	0·80	2·30	1·50	0·43	...	..	20	?	21·25	?	4·50	25·56	?	*Chhendipadah*			
0·47	...	...	2·84	0·02	0·46	0·05	0·04	0·12	0·04	...	16	?	11·84	?	2·34	16·31	?	*Tikerpara.*			
0·93	...	0·36	4 87	...	0·41	0·10	0·10	...	...	...	15	?	18·01	?	4·87	19·08	?	*Kumarkhole.*			
0·79	0·27	...	...	...	0·65	2·21	0·01	...	...	...	13	11·74	19·34	9·96	4·94	23·51	19·94	Puri	Puri.		
1·18	0·74	...	0·10	0·27	2·50	1·20	...	...	...	1·46	17	16·26	27·34	12·83	8·10	37·04	24·28	Khurda.			
1·00	0·40	...	0·15	0·19	1·37	0·63	...	...	0·05	0·02	19	12·68	15·60	10 02	3·50	31·58	19·20	Bhanpur.			
2·00	0·56	0·05	...	...	0·47	1·57	0·06	...	...	...	13	12·80	19·78	10·98	5·85	25·22	21·14	Gop.			
0·23	0·29	...	...	...	2·02	0·98	...	...	...	0·05	13	8·91	14·80	6·23	3·46	19·59	16 30	Satpara.			
1·31	0·84	...	...	...	1·34	1·56	0·08	...	0·21	...	14	13·43	19·40	11·56	7·40	25·99	22·18	Pipli.			
0·80	...	0·50	1·54	3·16	0·90	0·10	...	0·70	...	0·11	16	14·00	13·15	14·44	3·16	21·14	25·27	Nayagarh.			
1·00	0·79	...	0·15	1·43	1·89	1·00	...	0·15	0·17	0·18	21	15·13	23·76	11·25	4·08	27·90	22·19	Ranpur.			
1·35	0·52	...	...	...	3·87	1·05	...	...	...	0·30	12	?	23·80	?	6·55	29·08	?	*Kanas.*			
1·42	1·60	0·54	0·23	1·50	1·90	0·20	1·24	0·42	1·69	1·30	25	18·83	21·22	12·09	1·90	27·04	23·32	Pachamba (*Giridih*).	Hazaribagh.		
0·85	0·26	0·03	0·42	0·78	2·41	0·15	1·03	1·19	0·07	0·39	22	18·74	14·14	13·62	2·41	18·62	23·69	Hazaribagh.			
1·21	0·18	...	...	0·59	2·32	...	0·92	...	...	...	14	15·63	12·80	13·47	2·32	17·31	21 65	Barhi.			
0·31	0·09	...	...	0·46	3·21	0·23	1·04	1·04	...	0·54	19	17·33	13·25	16·23	3·21	14·90	20·13	Chatra.			
2·00	...	0·72	...	...	1·19	1·40	0·43	0·96	0·50	2·30	12	15·53	13·43	14·88	2·30	16·43	25·23	Kharasdiha.			
1·20	...	...	...	1·20	..	1·10	0·30	...	...	...	13	14·43	10·80	14·78	3·10	14·85	24·09	Ramgar.			
3·00	0·15	...	0·55	1·43	5·10	0·41	0·94	0·28	0·15	0·42	21	17·59	17·18	12·51	5·10	20·70	22·10	Lohardaga	Ranchi.		
...	1·72	0·05	.	...	3·00	0·30	1·10	1·41	0·03	...	18	19·10	16·52	13·20	3·00	19·22	22·97	Ranchi.			
2·07	...	...	...	0·70	0·30	0·20	0·50	0·60	...	...	15	14·84	11·90	13·27	2·07	14·25	23·65	Silli.			
2·35	2·24	0·55	0·97	1·25	1·07	0 10	0·72	0·07	0·09	0·45	22	17·14	22·31	18·64	2 90	24 06	30·99	Palkot.			
2·20	0·33	...	...	3·41	1·07	7·00	1·17	1·00	...	...	18	?	30·12	?	7·00	44·56	?	*Bano.*			
0·70	...	...	...	...	1·90	0·30	2·40	...	...	...	11	10·14	13·79	13·10	2·40	17·01	28·72	Tamar.			
0·31	0·24	...	0·30	0·80	0·10	0·30	0·68	0·27	...	...			?	?			?	*Kurdeg.*			
0·75	1·28	1·40	0·30	1·25	0·15	0·09	0·12	...	...	...	21	17·43	14·64	15·55	2·50	17·10	23·73	Chainpur.			
0·30	2·20	...	2·00	3·50	...	...	...	3·20	...	...	9	20·33	27·20	18·41	8·00	30·00	29·03	Sirguja.			
0·88	0·40	0·08	1·30	1·50	0·40	0·52	0·47	0·26	1·23	...	23	21·79	23·47	16·11	3·15	?	28·45	Jashpur.			
...	0·22	0·03	0·05	1·40	0·58	0·20	0·32	0·95	...	...	22	18·78	21·60	17·53	3·45	25·56	28·31	Gangpur.			
0·34	0·01	0·02	0·07	0·16	1·22	0·50	0·42	0·28	0·01	...	15	16 16	9·80	12·51	1·92	10·29	19·42	Palamau (*Daltongunj*)	Palamau.		
0·80	...	...	...	0·85	5·05	0·54	4·40	...	...	0·65	15	17·33	16·54	14·00	5·05	17·94	23·30	Balumath.			
...	...	...	...	...	3·20	2·07	0·50	0·50	...	0·36	17	15·07	16·40	16·48	3·20	16·58	23·64	Husainabad.			
0·71	0·08	...	...	0·17	1·06	0·48	0·74	0·57	...	...	15	15·47	11·83	12·39	2·50	15·59	19·17	Garhwa.			
0·83	0·07	...	...	0·50	1·74	0·11	0·63	0·69	...	0·14	18	?	12·62	?	3·06	19·89	?	*Mahuadaur.*			
1·00	...	...	...	1·00	3·80	1·25	2·15	0·55	0·15	0·20	17	?	17·45	?	3 80	19·45	?	*Panki.*			
2·29	...	...	...	0·64	4·15	1·26	0·55	0·28	0·10	0·70	22	?	19·08	?	4·15	22·68	?	*Latehar.*			
1·84	0·02	...	0·31	0·14	0·69	0·33	0·90	0·67	0·33	0·05	21	?	14·45	?	2·06	15 58	?	*Nagaruteri.*			
1·75	...	...	...	..	2·50	0·50	0·50	0·75	...	...	15	?	15 70	?	3·50	21·45	?	*Ranka.*			
0·40	...	...	...	...	4·65	1·88	2·60	0·40	...	...	15	?	17·45	?	4·65	20·27	?	*Chattarpur.*			
0·35	0·35	...	...	0·09	0·50	0·30	1·21	0·02	0·05	0·01	15	17·42	11·95	12·23	4·01	17·39	24·25	Purulia ..	Manbhum.		
0·08	0·36	0·50	...	...	1·13	0·09	1·88	0·31	0·41	0·46	18	18·10	11·70	14·19	1·68	15·19	25·11	Gobindpur.			
0·24	1·10	...	...	...	0·63	0·53	0·55	0·65	0·90	...	19	16·33	11·08	13·25	2·13	19·89	22·74	Raghunathpur.			
...	...	...	...	...	0·45	0·12	3·00	0·60	...	...	15	16·50	18·25	12·82	5·20	22 42	25·70	Barabhabhum.			
1·35	...	...	...	...	1·72	0·08	1·35	0·47	...	...	15	13·80	12·15	12·56	1·72	16·84	24·45	Jhalda.			
0·10	...	...	...	...	2·00	...	1·50	0·50	..	0·45	13	15·73	9 23	12·13	2·00	13·12	13·12	Chas.			
0·05	0·53	0·20	...	0·02	1·40	...	2·36	0·37	2·95	1·36	19	16·22	18·58	13·51	3·95	24·33	25·04	Pandra.			
3·56	0·22	0·04	...	...	0·40	0·70	3·70	0·95	0·06	...	18	16·66	20·73	13·40	4·35	26·46	24·05	Chaibasa	Singhbhum.		
0·20	...	...	...	0·40	0·68	3·12	...	...	...	...	14	16·14	20·79	13·86	5·38	28·22	24·83	Chakradharpur.			
0·42	0·05	...	...	...	...	0·50	0·79	...	0·30	...	15	15·33	9·42	12·02	2·59	14·13	26·08	Ghatsila.			
...	...	0·12	0·2.	1·03	0·63	1·03	0·51	0·43	...	0·47	24	14·47	16·39	11·73	3·30	20·42	24·92	Baharagura.			
												17·88		17·10			27·07				
...	...	...	...	0·16	0·10	3·96	1·10	0·17	0·10	...	18	16·38	17·36	14·36	5·56	23·27	33·50	Gaikura.			
5·30	0·25	0 33	1·45	2·30	0·87	0·70	0·76	0·43	0·15	0·20	25	18·71	30·48	22·17	6·76	43·91	34·34	Kalikapur.			
...	...	...	...	...	0·25	1·24	3·15	1·19	...	...	16	?	19·05	?	4·30	25·56	?	Monaharpur.			
1·71	0·08	0·47	...	..	0·54	0·33	1·68	1·18	0·01	...	19	?	19·13	?	7·18	29·15	?	*Katbari.*			
1·56	0·08	...	...	...	0·93	0·60	1·94	...	0·07	...	16	?	19·90	?	7·30	25·54	?	*Seraikella.*			
1·50	...	...	...	...	1·15	2·29	0·32	...	0·07	...	15	13·74	15·30	10·46	4·53	22·91	18·45	*Kharswan.*			
...	1·05	0·05	...	0·05	...	1·52	1·20	0·05	...	...	19	14·38	15·10	12·29	4·24	22·02	24·81	Keonjhar ...	Orissa Tributary Mahals.		
0·60	0·71	0·05	0·33	2·42	0·52	0·72	0·07	0·06	0·73	0·10	20	14 30	13·11	11·20	2·42	17·89	21·63	Kunjabongarh.			

SUMMARY OF THE METEOROLOGICAL AND RAINFALL OBSERVATIONS TAKEN IN BENGAL, AND OF THE METEOROLOGICAL OBSERVATIONS TAKEN IN ASSAM, FOR THE MONTH OF JULY 1902.

TOWARDS the end of June changes of an exceptional kind began in North Bengal and Assam. These extended westward and southward, with the result that in a few days south-west monsoon conditions became established over the greater part of Northern India. On the 1st of July, therefore, ordinary monsoon weather prevailed in Bengal, and the only trace of the preliminary disturbance was seen in the heavy rainfall which was reported on that date from Orissa.

Throughout July well-marked south-west monsoon conditions continued without interruption, and the most noticeable feature is the general heavy rainfall as shown by the average rainfall in the various livisions of the Province. In Orissa the fall was 19 6 inches, 8 inches in excess of the normal. in East Bengal 22·7 inches, 5 inches in excess, while in the other divisions there was excess of at least 1 inch on an average for the whole area.

But while a general view of the rainfall by this method of averages gives excess in all parts of the Province, an inspection of the individual reports shows considerable tracts of country in which rainfall has been deficient, though not to any great extent. These areas are chiefly in Bihar and the southern parts of Bengal Proper, but there has been a small deficiency in part of Chota Nagpur and North Bengal also. Orissa is the only division in which rainfall during the month was uniformly in excess.

Rainfall in every year is more or less irregularly distributed, but during the month just past the irregularity was more marked than usual. This was probably due to the local storms which were a not uncommon feature during the early part of the month, and to the fact that rainfall on more than one occasion appeared to commence in the north-east and extend southward and westward, instead of, as usually happens, accompanying cyclonic disturbances from the Bay of Bengal.

This disturbing influence which proceeds from the north-east, and which I have made frequent reference to before, has been very noticeable during the present season. The phenomenon which no doubt is connected with the causes of the abnormal monsoon seasons of the past few years awaits explanation. All that can be said is that up to the time when rainfall begins and temperature falls rapidly in North Bengal and Assam, the observations at the ground level give little or no indication of the approach of disturbed weather, and that therefore the causes are probably to be found in the upper rather than the lower air.

Three periods of disturbed weather, each with more or less general heavy rainfall, occurred. The first of these began as a diffused depression about the 4th, extending over the south of the Bay, and causing, if the reports from Diamond Island be accepted, very strong winds in the east of the Bay. The depression formed further south than is usual in July, and moving westward or north-westward, crossed the coast of the Circars on the 6th. At 8 A.M. on that date, when the centre of the depression was near the coast, its existence was shown more by the cyclonic arrangement of the light winds then prevailing than by the pressure differences, and there was no deficiency in pressure except in the extreme south-west of the Bay. On the other hand there was a large excess in Bengal, varying from ·08 inch in Orissa to ·2 inch in North Bengal. Notwithstanding the high pressure then prevailing in Bengal, heavy rainfall occurred on the 5th and 6th—on the latter in the extreme north of the province. With the westward movement of the depression the heavy rainfall ceased; but as pressure steadily fell for several days subsequent to the 6th, the large excess slowly disappeared, and before the end of the second week there was an equally large defect.

During the second week and after the westward movement of the depression, rainfall was less general and lighter than at any other time during the month. After the reduction of pressure rainfall recommenced in the north and east of the Province, and on the 13th a depression began to form in the north of the Bay. This depression never attained to more than moderate depth at the centre, but there was a very steep pressure gradient over the whole Bay area, and with it exceptionally strong winds and rough sea. The strongest winds at Diamond Island were on the 14th and 15th, about 24 miles an hour on an average; and at Saugor Island between the 16th and 18th, when the average velocity was 30, 42 and 37 miles an hour respectively.

Up to the 15th the depression was moving slowly northwards, but thereafter it moved north-westward. On the 16th the centre was between Midnapore and Chaibassa, and on the 7th it had moved beyond the western boundary of the Province.

While the depression was in the north of the Bay heavy rain fell in Orissa and Arakan, and after its passage westward the strong influx of monsoon winds from the Bay caused heavy rain inland, chiefly in Bengal Proper Moderately heavy rainfall occurred in Bihar on the 19th and 20th, but generally the falls caused by the disturbance in the western districts, whether at the time of, or subsequent to, its passage, were comparatively light.

At the end of the third week the pressure gradient was steep over the Bay, but that was due to excess in the extreme south, as readings in Bengal were practically normal. A wave of rising pressure was at that time passing westward over the Province, and probably owing to the wind changes which accompanied it, heavy rain fell in the south-western districts. The most noticeable of these changes was the rapid increase of wind velocity at Saugor Island from 19 to 36 miles an hour on the 22nd and the heavy rainfall (7 inches) at that station.

The rise of pressure was followed by a similar fall, and along with that heavy rainfall began in Arakan on the 23rd, then in North Bengal on the 24th, and afterwards became general over the Province, except in the south-western districts. On the 26th the heavy rainfall was confined to the west of Bihar, but on that date a depression had begun to form

in South-West Bengal. This depression remained shallow; but as there was a steep gradient over the north of the Bay, wind velocity at Saugor Island again increased to about 40 miles an hour. The depression moved slowly westward, and during its passage general and in places heavy rainfall occurred in the southern and western districts.

The depression had practically ceased to affect weather in Bengal on the 29th, and during the closing days of the month ordinary monsoon weather prevailed with general but usually light or moderate rainfall.

Pressure underwent oscillations rather more frequent than usual and moderate in amount; but as the depressions which formed were not deep, the greatest defect was rarely more than ·2 inch. On an average for the whole month it was normal at the coast stations and in defect inland. This defect varied from less than ·01 inch in the south-western and eastern districts to ·03 inch in the west of Bihar.

Temperature was more frequently low owing to the cloudy rainy weather which prevailed with but little interruption throughout the month. Day readings were more frequently above the normal in the western districts, but generally there was defect at night. In Assam, Bengal Proper and Orissa mean defect was half a degree or less, and in Bihar and Chota Nagpur there was a mean excess of about half a degree.

Rainfall, as already stated, was on an average above the normal in all divisions of the Province, especially in Orissa and North Bengal, where there was excess of 8 and 5 inches, respectively. Owing to the local heavy falls which were more frequent than usual, the distribution of rainfall was irregular; and there are cases of variation from a moderate deficiency to a large excess over a limited stretch of country. The more striking examples of such variation are in the east of Bihar, the eastern parts of North Bengal and in parts of South-West Bengal. The greatest excess is 10 inches in part of Chittagong, the east of the Sunderbans, the south of Orissa and the east of North Bengal, and generally there is excess of between 5 and 10 inches in Orissa, the southern part of East Bengal, and the northern part of North Bengal, with the exception of the Jalpaiguri and Rangpur districts. The area of difficient rainfall includes a great part of Bihar, the extreme west of Chota Nagpur and most of the central districts. Generally, however, the defect is small, and there are only two tracts, chiefly in the Dinajpur and Burdwan districts, over which defect is more than 5 inches.

For the individual falls, which, owing to their irregularity, it is impossible to discuss in a brief description, reference to the accompanying tables is suggested.

The following table gives a comparison of the falls in the various divisions during the month of July with the normal fall, the actual being given as a percentage of the normal fall. The table also shows the actual falls for each of the previous months of the year expressed in the same way, and the last column of the table shows the total of the falls of the past seven months of the year in each division expressed as a percentage of the normal fall:—

Meteorological Divisions.	January.	February.	March.	April.	May.	June.	July.	Actual rainfall of first seven months of 1902 expressed as a percentage of the normal fall for the period.
South-West Bengal	Nil	2	166	250	136	57	110	102
North Bengal ...	11	2	261	154	112	108	112	114
East Bengal ...	Nil	1	85	308	127	131	129	138
Bihar ...	13	4	263	177	99	60	111	93
Orissa ...	104	1	97	218	82	58	169	114
Chota Nagpur ...	31	41	82	116	116	83	111	82

The following table gives full data for the comparison of the actual and normal rainfall of the month of July in all districts of the Province:—

Percentage Table for July 1902.

Division.	District.	Normal district rainfall July.	Actual district rainfall July 1902.	Percentage of actual to normal rainfall.	Percentage, excess (+), defect (−).
South-West Bengal	Burdwan	12·25	10·84	88	— 12
	Birbhum	13·49	17·76	132	+ 32
	Bankura	12·22	9·01	74	— 26
	Midnapore	12·51	16·91	135	+ 35
	Hooghly	12·05	11·58	96	— 4
	Howrah	11·53	15·09	131	+ 31
	24-Parganas	13·01	12·81	99	— 1
	Calcutta	12·31	15·52	126	+ 26
	Nadia	10·36	8·72	84	— 16
	Murshidabad	10·93	14·98	137	+ 37
	Jessore	10·64	10·47	98	— 2
	Khulna	13·10	16·62	127	+ 27

Percentage Table for July 1902—concld.

Division.	District.	Normal district rainfall July.	Actual district rainfall July 1902.	Percentage of actual to normal rainfall.	Percentage, excess (+), defect (−).
North Bengal ...	Rajshahi	11·81	12·62	107	+ 7
	Dinajpur	16·17	21·95	136	+ 36
	Jalpaiguri	33·22	32·81	99	− 1
	Darjeeling	31·91	35·65	112	+ 12
	Cooch Behar	23·85	33·04	139	+ 39
	Rangpur	14·81	14·44	98	− 2
	Bogra	13·26	14·74	111	+ 11
	Pabna	11·06	9·63	87	− 13
East Bengal ...	Dacca	12·95	12·85	99	− 1
	Mymensingh	16·47	21·86	133	+ 33
	Faridpur	11·72	13·62	116	+ 16
	Backergunge	17·45	29·18	167	+ 67
	Tippera	13·39	12·01	90	− 10
	Noakhali	24·01	31·97	133	+ 33
	Chittagong	26·16	35·31	135	+ 35
	Chittagong Hill Tracts ...	19·15	21·17	111	+ 11
Bihar ...	Patna	12·40	11·42	92	− 8
	Gaya	12·40	14·42	116	+ 16
	Shahabad	12·72	16·89	133	+ 33
	Saran	11·77	10·57	90	− 10
	Champaran	13·72	18·41	134	+ 34
	Muzaffarpur	12·03	12·37	103	+ 3
	Darbhanga	12·59	13·89	110	+ 10
	Monghyr	13·33	11·13	83	− 17
	Bhagalpur	12·72	11·51	90	− 10
	Purnea	18·16	17·08	94	− 6
	Malda	12·91	11·48	89	− 11
	Sonthal Parganas	12·68	18·21	144	+ 44
Orissa ...	Cuttack	11·89	21·97	185	+ 85
	Balasore	12·15	17·47	144	+ 44
	Puri	10·91	19·16	176	+ 76
Chota Nagpur ...	Hazaribagh	14·33	14·29	100	0
	Ranchi	14·38	15·89	110	+ 10
	Palamau	13·85	13·64	98	− 2
	Manbhum	12·81	13·33	104	+ 4
	Singhbhum	15·08	20·68	137	+ 37

The following table gives the summary of the temperature and rainfall data of each of the seven meteorological divisions of the Province for the month of July 1902:—

Meteorological Divisions.	Temperature						Rainfall—							
			Averages for month.				Of month.			Rainy days.			Since 16th May 1902.	
	Highest observed during month.	Lowest observed during month.	Of highest of each day.	Of lowest of each day.	Of mean for each day.	Average mean of month above or below normal mean of month.	Average.	Normal average.	Variation.	Average number in month.	Normal average number in month.	Variation.	Average.	Normal average.
South-West Bengal	96·4	74·2	89·1	78·6	83·9	−0·2	13·24	12·05	+1·19	16·64	15·92	+0·72	22·91	25·96
North Bengal	95·2	72·6	88·0	78·1	83·1	−0·5	20·59	18·44	+2·15	19·19	16·73	+2·46	45·20	42·38
East Bengal	96·8	71·8	89·3	77·6	82·0	−0·5	23·68	17·57	+5·11	20·66	18·71	+1·95	58·07	41·1 8
Bihar	109·4	67·0	90·8	78·7	84·8	+0·4	14·55	13·05	+1·50	16·06	14·68	+1·38	20·63	22·84
Orissa	98·9	71·4	88·0	78·3	83·2	−0·2	19·62	11·63	+7·99	17·09	14·13	+2·96	26·17	23·46
Chota Nagpur*	110·1	68·9	88·1	75·8	82·0	+0·5	15·66	14·09	+1·57	17·31	16·55	+0·76	19·53	24·78
Assam	98·1	71·5	88·3	77·1	82·7	−0·3								

* Purulia not included.

Meteorological Office, Bengal,
The 19th August 1902.

C. Little,
Meteorological Reporter to the Govt. of Bengal.

Vital Statistics of the Districts of Bengal for the month of June 1902.

Division.	Districts.	Population under registration.	BIRTHS.		DEATHS.																AVERAGE OF CORRESPONDING MONTH OF PREVIOUS FIVE YEARS.		Remarks.
			Number registered.	Ratio per 1,000 of population per annum.	CHOLERA.		SMALL-POX.		PLAGUE.		FEVER.		DYSENTERY AND DIARRHŒA.		RESPIRATORY DISEASES.		INJURY.		OTHER CAUSES.		TOTAL OF ALL CAUSES.				
					Number registered.	Ratio per 1,000 of population per annum.	Number registered.	Ratio per 1,000 of population per annum.	Number registered.	Ratio per 1,000 of population per annum.	Number registered.	Ratio per 1,000 of population per annum.	Number registered.	Ratio per 1,000 of population per annum.	Number registered.	Ratio per 1,000 of population per annum.	Number registered.	Ratio per 1,000 of population per annum.	Number registered.	Ratio per 1,000 of population per annum.	Number registered.	Ratio per 1,000 of population per annum.	Number registered.	Ratio per 1,000 of population per annum.	
1	2	3	4	5	6	7	8	9	10	11	12	13	14	15	16	17	18	19	20	21	22	23	24	25	26
Burdwan	Burdwan	1,532,475	4,472	34·92	127	·96	27	·12	...	...	2,250	17 76	54	·36	5	·03	44	·24	655	5 04	3,199	24 96	2,523	19·68	
	Birbhum	902,280	3,276	43·53	33	·36	5	·05	...	...	1,179	15·60	14	·12	...	...	41	·48	491	6 36	1,753	23·28	1,509	20 04	
	Bankura	1,116,411	3,201	34·39	40	·36	178	1·80	...	...	1,536	16 44	41	·36	...	...	48	·48	610	6 48	2,453	26 28	1,952	20·88	
	Midnapore	2,739,114	7,052	30·24	157	·60	1,515	6 48	...	...	4,441	19·03	154	·60	1	·003	140	·60	1,018	4·32	7,426	31 92	4,401	18 84	
	Hooghly, including Serampore.	1,049,282	2,061	23·52	58	·60	33	·36	...	...	1,713	19 56	135	1 44	29	·24	45	·48	348	3 96	2,361	27 00	1,732	19 80	
	Howrah	850,514	1,760	24·72	111	1·56	37	·48	17	·12	796	11·16	272	3·72	...	...	58	·72	449	6·24	1,740	24 48	1,380	19 44	
Presidency	24-Parganas	2,078,329	4,589	26 40	101	·48	134	·72	...	...	2,299	13 20	91	·48	3	·01	137	·72	580	3·12	3,315	19 08	2,586	14 88	
	Calcutta	847,796	742	10·44	137	1·92	6	·08	258	3·60	338	4·68	150	2·16	180	2·52	38	·48	603	9 72	1,809	25·56	1,656	23 40	
	Nadia	1,667,491	3,961	27·72	63	·36	...	...	...	...	2,711	19 44	4	·02	...	...	99	·60	395	2·64	3,260	23·40	2,463	17 64	
	Murshidabad	1,333,184	3,623	32·52	9	·07	19	·12	...	...	2,122	19·03	...	...	1	·008	89	·72	360	3·24	2,600	23 40	2,298	20 64	
	Jessore	1,813,155	4,243	28·08	21	·12	7	·03	...	...	2,968	19·56	3	·01	2	·01	125	·72	335	2·16	3,461	22 80	2,892	19·20	
	Khulna	1,253,048	3,395	32·40	22	·12	1	·008	...	...	1,415	13·44	12	·09	5	·03	78	·60	559	5 28	2,088	19·92	1,515	17 28	
Rajshahi	Rajshahi	1,462,407	3,803	31·20	117	·96	1	·007	...	...	3,705	30·36	8	·06	3	·02	86	·60	278	2·28	4,198	34 44	2,685	21 96	
	Dinajpur	1,567,080	5,717	43·68	185	1·32	132	·96	...	...	4,351	33 24	6	·03	2	·01	63	·48	287	2 16	5,026	38 40	3,138	24 00	
	Jalpaiguri	787,380	2,268	34·56	2	·02	22	·24	...	...	2,300	35 04	43	·60	...	...	16	·24	61	·84	2,444	37·20	2,014	30 60	
	Darjeeling	249,117	711	34 20	...	...	...	...	...	...	671	32 28	104	4 92	1	·04	7	·24	118	5 64	901	43 32	896	43·08	
	Rangpur	2,154,181	6,380	35·52	8	·03	276	1·44	...	...	5,531	29 64	9	·04	1	·004	59	·24	270	1 44	5,954	33 12	3,912	21·72	
	Bogra	854,535	2,688	37·68	87	1·20	67	·84	...	...	2,239	31 44	4	·04	...	...	53	·72	188	2 64	2,638	36 96	1,231	17 28	
	Pabna	1,420,461	2,783	23·40	17	·12	109	·84	...	...	3,586	30 24	8	·06	...	...	67	·48	116	·96	3,905	32 88	2,346	19·80	
Dacca	Dacca	2,649,522	5,891	26·64	94	·36	67	·24	...	...	3,602	15 84	122	·48	28	·12	70	·24	825	3 72	4,708	21 24	3,611	16·32	
	Mymensingh	3,915,068	8,936	27·36	127	·36	234	·60	...	...	5,894	18 00	61	·12	...	...	116	·24	1,010	3·00	7,442	22 80	5,957	18 24	
	Faridpur	1,937,646	4,567	28 20	20	·12	8	·04	...	...	4,004	24·72	25	·12	...	...	121	·72	666	4 08	4 847	30 00	3,420	21·12	
	Backergunge	2,291,752	5,597	29 28	89	·36	6	·02	...	...	3,084	16 08	14	·07	...	...	143	·72	1,503	7 80	4 839	25 32	4,019	21 00	
Chittagong	Tippera	2,117,391	5,193	29 40	1	·004	41	·12	...	...	2,318	13 08	25	·12	11	·06	107	·60	747	4 20	3,250	18 36	2,937	16 56	
	Noakhali	1,141,723	3,864	40·56	4	·03	...	...	...	...	2,496	26·16	4	·03	...	...	89	·84	341	3·48	2,934	30·72	2 678	28 08	
	Chittagong	1,353,260	5,250	46·44	29	·24	6	·08	...	...	2,855	25·20	23	·12	...	...	83	·72	160	1 32	3,156	27·96	3,543	31·32	
	Chittagong Hill Tracts	...	...	...	...	...	...	...	...	...	...	...	...	...	...	...	...	...	...	...	...	...	...	...	Not under registration.
Patna	Patna	1,624,985	4,564	53·60	1,280	9 36	758	5·52	13	·09	2,220	16·32	540	3 96	42	·24	120	·84	2,107	15 48	7,080	52·20	4,451	32 76	
	Gaya	2,059,933	5,668	33 00	627	3·60	390	2 16	...	...	4,903	28 56	99	48	...	...	151	·84	879	5 04	7,049	41 04	5,339	31 08	
	Shahabad	6,554	53 96	250	1 44	33	·12	3	·01	3,102	18·96	13	·07	...	...	...	81	·48	396	3·60	4,078	24·84	5,770	35 16	
	Saran	2,409,509	7,465	37 20	488	2 40	71	·24	64	·24	5,096	15 36	417	2·04	...	...	176	·84	2,6 4	12·96	6 926	34 44	5,522	27 48	
	Champaran	1,790,463	6,281	41·88	863	5·28	48	·24	...	...	3,455	23 04	11	·07	...	...	116	·96	1,073	7 08	5,536	37 08	5,168	34 56	
	Muzaffarpur	2,754,790	9,443	41 04	2,526	10 92	59	·24	...	...	5,546	24 12	105	·36	...	...	106	·72	1,431	6·12	9 863	42 96	7,065	30 72	
	Darbhanga	2,912,611	9,409	38·76	1,095	4 20	34	·12	7	·02	4,967	20 04	108	·36	...	...	162	·60	1,004	4 08	7,217	29·64	7,431	30·60	
Bhagalpur	Monghyr	2,068,804	5,950	34 44	653	3 72	208	1·20	31	·12	3,275	18 96	25	·12	...	...	131	·72	722	4 08	5,065	29·16	5,052	29 28	
	Bhagalpur	2,088,953	6,169	38 40	363	2 04	61	·24	...	...	3,027	17 28	13	·07	...	...	81	·36	435	2 40	3,980	22·80	4,522	25 92	
	Purnea	1,874,794	5,175	33 12	...	...	33	·12	...	...	3,86	24·72	3	·01	...	...	50	·24	187	·96	4,120	26 28	4,047	25·80	
	Malda	884,030	2,743	37·20	124	1 68	9	·12	...	...	1,707	23·16	13	1·2	...	...	47	·60	168	2 28	2,068	27 96	1,710	23 16	
	Santhal Parganas	1,809,737	5,787	38 28	75	·48	171	1 08	...	...	2,462	16·32	9	·04	...	...	89	·48	335	2 28	3,161	20 88	3,012	19 92	
Orissa	Cuttack	2,062,758	7,029	40 92	517	3 00	180	96	...	...	1,775	10·32	549	3·12	12	·06	131	·72	1,257	7·20	4,431	25 68	4,421	25 68	
	Balasore	1,071,197	3,966	44·64	300	3·36	141	1·56	...	...	762	8 52	107	1 08	...	...	99	60	920	10 20	2,290	25 56	2,071	23·16	
	Puri	1,017,284	2,971	33·84	585	6·84	52	·60	...	...	524	6 12	333	3 84	34	·36	50	·48	984	11 52	2,564	30·24	2,817	33·12	
	Angul and Khondmals	...	...	...	...	...	...	...	...	...	...	...	...	...	...	...	...	...	...	...	...	...	...	...	Not under registration.
Chota Nagpur	Hazaribagh	1,177,961	4,529	46·08	367	3 72	92	·84	...	...	2,111	21·48	68	·60	5	·04	69	·60	622	6·24	3,334	33·96	2,379	24·12	
	Ranchi	1,187,926	4,502	45·36	...	...	29	·24	...	...	1,610	16·20	130	1 20	...	...	75	·72	747	7 44	2,591	26 16	1,940	19 56	
	Palamau	619,600	2,475	47 88	188	3·60	92	1·68	...	...	1,149	22 20	11	·12	...	...	50	·96	261	5 04	1,751	33·84	1,983	34 36	
	Manbhum	1,301,364	4,658	42 84	226	2 04	307	2 76	...	...	2 611	24 00	89	·72	...	...	49	·36	688	6 24	3 970	36 60	2,614	24 00	
	Singhbhum	618,579	1,943	37·92	3	·04	463	9·00	...	...	800	15 60	19	·36	...	...	47	·84	139	2·64	1,471	28 68	993	16 80	
	Total	74,428,193	212,250	34·20	12,079	1·92	6,162	·96	393	·06	123,703	19 80	4,062	·60	365	·04	3,979	·60	30,182	4 80	180,225	29 04	147,685	23·76	
	Average of corresponding month of previous five years	.....	170,421	27 36	14,913	2 40	2,072	·24	Data not available.		99,365	15·96	3,375	·48	Data not available.		3,970	·60	23,360	3 84	147,685	23·76	...	...	
	Difference + or −	.....	+41,829	+6·84	−2,834	−·48	+4,090	+·72			+23,638	+3·84	+687	+·12			+9	Equal	+6,192	+·96	+32,540	+5 28	—		

OFFICE OF SANITARY COMMISSIONER FOR BENGAL,
The 16th August 1902.

B. H. DRAKE, CAPTAIN, I.M.S.,
Offg. Sanitary Commissioner for Bengal.

Percentage Table for July 1902—concld.

Division.	District.	Normal district rainfall for July.	Actual district rainfall July 1902.	Percentage of actual to normal rainfall.	Percentage, excess (+), defect (−).
North Bengal ...	Rajshahi	11·81	12·62	107	+ 7
	Dinajpur	16·17	21·95	136	+ 36
	Jalpaiguri	33·22	32·81	99	− 1
	Darjeeling	31·01	35 65	112	+ 12
	Cooch Behar	23 85	33 04	139	+ 39
	Rangpur	14·81	14·44	98	− 2
	Bogra	13·26	14·74	111	+ 11
	Pabna	11·06	9·63	87	− 13
East Bengal ...	Dacca	12·95	12·85	99	− 1
	Mymensingh	16·47	21·86	133	+ 33
	Faridpur	11·72	13·62	116	+ 16
	Backergunge	17·45	29·18	167	+ 67
	Tippera	13·39	12·01	90	− 10
	Noakhali	24·01	31·97	133	+ 33
	Chittagong	26·16	35·31	135	+ 35
	Chittagong Hill Tracts ...	19·15	21·17	111	+ 11
Bihar ...	Patna	12·40	11·42	92	− 8
	Gaya	13·40	14·42	1 6	+ 16
	Shahabad	12·72	16·89	133	+ 33
	Saran	11·77	10·57	90	− 10
	Champaran	13·72	18·41	134	+ 34
	Muzaffarpur	12·03	12·37	103	+ 3
	Darbhanga	12·59	13·89	110	+ 10
	Monghyr	13·33	11·13	83	− 17
	Bhagalpur	12·72	11·51	90	− 10
	Purnea	18·16	17·08	94	− 6
	Malda	12·91	11·48	89	− 11
	Sonthal Parganas	12·68	18·21	144	+ 44
Orissa ...	Cuttack	11·89	21·97	185	+ 85
	Balasore	12·15	17·47	144	+ 44
	Puri	10·91	19·16	176	+ 76
Chota Nagpur ...	Hazaribagh	14·33	14·29	100	0
	Ranchi	14·38	15·89	110	+ 10
	Palamau	13·85	13·64	98	− 2
	Manbhum	12·81	13·33	104	+ 4
	Singhbhum	15·08	20 68	137	+ 37

The following table gives the summary of the temperature and rainfall data of each of the seven meteorological divisions of the Province for the month of July 1902:—

Meteorological Divisions.	Temperature						Rainfall—							
			Averages for month.				Of month.			Rainy days			Since 16th May 1902.	
	Highest observed during month.	Lowest observed during month.	Of highest of each day.	Of lowest of each day.	Of mean for each day.	Average mean of month above or below normal mean of month.	Average.	Normal average.	Variation.	Average number in month.	Normal average number in month.	Variation.	Average.	Normal average.
South-West Bengal	90·4	74·2	89·1	78·6	83·9	−0·2	13·24	12·05	+1·19	16·64	15·92	+0·72	22·91	25·96
North Bengal	95·2	72·6	88·0	78·1	83·1	−0·5	20·59	18·44	+2·15	19·19	16·73	+2·46	45·20	42·38
East Bengal	96·8	71·8	86·3	77·6	82·0	−0·5	22·68	17·57	+5·11	20·66	18·71	+1·95	53·07	41·1 8
Bihar	109·4	67·0	90·8	78·7	84·8	+0·4	14·55	13·05	+1·50	16·06	14·68	+1·38	20·63	22·84
Orissa	98·9	71·4	88·0	78·3	83·2	−0·2	19·02	11·63	+7·39	17·09	14·13	+2·96	26·17	23·46
Chota Nagpur*	110·1	68·9	88·1	75·8	82·0	+0·5	15·66	14·09	+1·57	17·31	16·55	+0·76	19·53	24·78
Assam	96·1	71·5	88·3	77·1	82·7	−0·3								

* Purulia not included.

Meteorological Office, Bengal,
The 19th August 1902.

C. Little,
Meteorological Reporter to the Govt. of Bengal.

Vital Statistics of the Districts of Bengal for the month of June 1902.

Divisions.	Districts.	Population under registration.	BIRTHS.		DEATHS.																AVERAGE OF CORRESPONDING MONTH OF PREVIOUS FIVE YEARS.		Remarks.
					CHOLERA.		SMALL-POX.		PLAGUE.		FEVER.		DYSENTERY AND DIARRHŒA.		RESPIRATORY DISEASES.		INJURY.		OTHER CAUSES.		TOTAL OF ALL CAUSES.				
			Number registered.	Ratio per 1,000 of population per annum.	Number registered.	Ratio per 1,000 of population per annum.	Number registered.	Ratio per 1,000 of population per annum.	Number registered.	Ratio per 1,000 of population per annum.	Number registered.	Ratio per 1,000 of population per annum.	Number registered.	Ratio per 1,000 of population per annum.	Number registered.	Ratio per 1,000 of population per annum.	Number registered.	Ratio per 1,000 of population per annum.	Number registered.	Ratio per 1,000 of population per annum.	Number registered.	Ratio per 1,000 of population per annum.	Number registered.	Ratio per 1,000 of population per annum.	
1	2	3	4	5	6	7	8	9	10	11	12	13	14	15	16	17	18	19	20	21	22	23	24	25	26
Burdwan	Burdwan	1,532,475	4,473	34·92	127	·96	27	·12	..	..	2,250	17 76	54	·36	5	·03	44	·24	655	5 04	3,192	24 96	2,523	19·68	
	Birbhum	902,280	3,276	43·53	33	·36	5	·05	..	..	1,179	15·60	14	·12	...	...	41	·48	481	6 36	1,753	23·28	1,509	20 04	
	Bankura	1,116,411	3,201	34·39	40	·36	178	1·80	..	..	1,536	16 44	41	·36	..	..	45	·48	610	6·48	2,453	26 28	1,952	20·88	
	Midnapore	2,789,114	7,052	30·24	157	·60	1,515	6·48	..	..	4,441	19·03	154	·60	1	·003	140	·60	1,018	4·32	7,428	31 92	4,401	18·84	
	Hooghly, including Serampore.	1,049,252	2,061	23·52	58	·60	33	·36	..	..	1,713	19·56	135	1 44	29	·24	45	·48	348	3 96	2,361	27 00	1,732	19 80	
	Howrah	850,514	1,760	24·72	111	1·56	37	·48	17	·12	796	11·16	272	3·72	...	...	58	·72	449	6·24	1,740	24 48	1,380	19 44	
Presidency	24-Parganas	2,078,329	4,589	26·40	101	·48	134	·72	...	...	2,299	13 20	91	·48	3	·01	137	·72	550	3·12	3,315	19·08	2,586	14 88	
	Calcutta	847,796	748	10·44	137	1·92	6	·08	238	3·60	338	4·68	159	2·16	180	2·52	58	·48	693	9·72	1,809	25·56	1,656	23 40	
	Nadia	1,667,491	3,961	27·72	63	·36	...	...	...	..	2,711	19 44	4	·02	..	..	99	·60	383	2·64	3,260	23·40	2,463	17 64	
	Murshidabad	1,533,184	3,623	32·52	9	·07	19	·12	...	...	2,122	19·08	..	..	1	·008	89	·72	360	3·24	2,600	23 40	2,298	20 64	
	Jessore	1,813,155	4,243	28·08	21	·12	7	·03	...	...	2,968	19·56	3	·01	2	·01	125	·72	335	2·16	3,461	22 80	2,942	19·20	
	Khulna	1,265,043	3,395	32·40	22	·12	1	·008	...	...	1,415	13·44	12	·09	5	·03	74	·60	559	5 28	2,088	19·92	1,815	17 28	
Rajshahi	Rajshahi	1,462,467	3,803	31·20	117	·96	1	·007	...	...	3,705	30·36	8	·06	3	·02	86	·60	278	2·28	4,199	34 44	2,685	21·96	
	Dinajpur	1,567,080	5,717	43·68	185	1·32	132	·96	...	...	4,351	33·24	6	·03	2	·01	63	·48	287	2·16	5,026	38 40	3,138	24 00	
	Jalpaiguri	787,380	2,268	34·56	2	·02	22	·24	...	...	2,300	35 04	43	·60	...	...	16	·24	61	·84	2,444	37·20	2,014	30·60	
	Darjeeling	249,117	711	34·20	...	...	...	...	...	...	671	32·28	104	4 92	1	·04	7	·24	118	5 64	901	43 32	696	43·08	
	Rangpur	2,154,161	6,390	35·52	8	·03	276	1·44	...	...	5,331	29 64	9	·04	1	·004	59	·24	270	1 44	5,954	33 12	3,912	21·72	
	Bogra	854,833	2,698	37·68	87	1·20	67	·84	...	...	2,239	31·44	4	·04	..	...	53	·72	188	2 64	2,638	36·96	1,231	17 28	
	Pabna	1,420,461	2,753	23·40	17	·12	109	·84	...	...	3,586	30 24	8	·06	...	...	67	·48	118	·96	3,905	33·88	2,316	19·80	
Dacca	Dacca	2,649,522	5,891	26·64	94	·36	67	·24	...	...	3,602	15 84	122	·48	28	·12	70	·24	825	3 72	4,708	21 24	3,611	16·32	
	Mymensingh	3,915,068	8,936	27·36	127	·36	234	·60	...	...	5,894	18 00	61	·12	...	...	116	·24	1,610	3·00	7,442	22 80	5,957	18 24	
	Faridpur	1,937,646	4,567	28 20	29	·12	8	·04	...	...	4,004	24·72	25	·12	...	...	121	·72	666	4 08	4,847	30 00	3,420	21·12	
	Backergunge	2,291,752	5,597	29·28	89	·36	6	·02	...	...	3,081	16 08	14	·07	...	...	143	·72	1,503	7 80	4,839	25·32	4,019	21 00	
Chittagong	Tippera	2,117,991	5,193	29 40	1	·004	41	·12	...	...	2,318	13 08	25	·12	11	·06	107	·60	747	4 20	3,250	18 36	2,937	16 56	
	Noakhali	1,141,728	3,864	40·56	4	·03	...	...	...	...	2,496	26·16	4	·03	...	...	89	·84	341	3·48	2,934	30·72	2,678	28 08	
	Chittagong	1,353,250	5,250	46·44	29	·24	6	·08	...	...	2,855	25·20	23	·12	...	...	83	·72	160	1 32	3,156	27·96	3,543	31·32	
	Chittagong Hill Tracts																								Not under registration.
Patna	Patna	1,624,785	4,564	33·60	1,280	9·36	758	5·52	13	·09	2,220	16·32	540	3 96	42	·24	120	·84	2,107	15·48	7,080	52·20	4,451	32 76	
	Gaya	2,069,933	5,668	33 00	627	3·60	390	2·16	..	..	4,805	28 56	99	48	...	...	151	·84	879	5 04	7,049	41 04	5,339	31 08	
	Shahabad	1,962,696	5,564	33·96	250	1 44	33	·12	3	·01	3,102	18·96	13	·07	...	...	91	·48	596	3·60	4,078	24 84	5,770	35 16	
	Saran	2,402 589	7 485	37 20	488	2 40	71	·24	64	·24	3,096	15 36	417	2·04	...	...	176	·84	2,614	12·96	6 986	34·44	5,522	27·48	
	Champaran	1,780,463	6,261	41·88	963	5 28	48	·24	...	...	3,453	23 04	11	07	...	...	146	·96	1,073	7 08	5,536	37 08	5,166	34 56	
	Muzaffarpur	2,754,790	9,443	41 04	2,826	10 92	59	·24	...	...	5,546	24·12	105	·36	...	...	198	·72	1,451	6·12	9,863	42 96	7,065	30 72	
	Darbhanga	2,912,611	9 409	38·76	1,035	4 20	34	·12	7	·02	4,867	20 04	148	·36	...	...	162	·60	1,004	4 08	7,217	29·64	7,431	30·60	
Bhagalpur	Monghyr	2,058,804	5,958	34 44	653	3·72	206	1·20	31	·12	3,278	18 96	25	·12	...	...	131	·72	732	4 08	5,045	29·16	5,052	29 28	
	Bhagalpur	2,068,953	6,169	35·40	363	2·04	61	·24	...	...	3,027	17 28	13	·07	...	...	81	·36	435	2 40	3,980	22·80	4,523	25 92	
	Purnea	1,874,794	5,175	33 12	...	...	33	·12	...	...	3,867	24·72	3	·01	...	...	50	24	167	·96	4,120	26·28	4,047	25·80	
	Malda	884,080	2,743	37·20	124	1·68	94	·12	...	...	1,707	23·16	13	12	...	...	47	·60	168	2 28	2,068	27 96	1,710	23 16	
	Sonthal Parganas	1,809,737	5,787	38 28	75	·48	171	1·08	...	...	2,462	16·32	9	·04	...	...	89	·48	355	2 28	3,161	20 88	3,012	19·92	
Orissa	Cuttack	2,062,758	7,029	40·92	527	3 00	180	96	...	...	1,775	10 32	549	3·12	12	·06	131	·72	1,357	7·20	4,431	25 68	4,421	25 68	
	Balasore	1,071,197	3,986	44·64	300	3·36	141	1·56	...	...	762	8·52	107	1 08	...	...	60	60	920	10 20	2,290	25·56	2,071	23·16	
	Puri	1,017,284	2,871	33·84	585	6·84	52	·60	...	...	524	6 12	335	3 84	34	·36	56	·48	984	11·52	2,564	30·24	2,817	33·12	
	Angul and Khondmals																								Not under registration.
Chota Nag-pur	Hazaribagh	1,177,961	4,529	46·08	367	3 72	92	·84	...	...	2,111	21·48	68	·60	5	·04	69	·60	622	6·24	3,534	33·96	2,379	24·12	
	Ranchi	1,187,935	4,502	45·36	...	...	29	·24	...	...	1,610	16·20	130	1 20	...	...	75	·72	747	7 44	2,591	26 16	1,940	19 56	
	Palamau	619,600	2,475	47·88	188	3·60	92	1·68	...	...	1,146	22 20	11	·12	...	...	50	·96	261	5 04	1,751	33·84	1,883	36 36	
	Manbhum	1,301,364	4,658	42 84	226	2 04	307	2 76	...	...	2,611	24 00	89	·72	..	...	40	·36	688	6 24	3,970	36 60	2,614	24·00	
	Singhbhum	618,579	1,943	37·92	3	·04	463	9·00	...	...	800	15 60	19	·36	..	...	47	·84	139	2·64	1,471	28·68	863	16 80	
	Total	74,428,193	212,250	34·20	12,079	1·92	6,162	·96	393	·06	123,903	19·80	4,062	·60	385	·04	3,979	·60	30,182	4 80	180,225	29·04	147,685	23·76	
	Average of corresponding month of previous five years	.....	170,421	27·36	14,913	2·40	2,072	·24	Data not available.		99,365	15·96	3,375	·48	Data not available.		3,970	·60	23,990	3 84	147,685	23·76	...	...	
	Difference + or —	.....	+41,829	+6·84	—2,834	—·48	+4,090	+·72			+23,638	+3·84	+687	+·12			+9	Equal	+6,192	+·96	+32,540	+5·28	.....		

OFFICE OF SANITARY COMMISSIONER FOR BENGAL,
The 16th August 1902.

B. H. DRAKE, CAPTAIN, I.M.S.,
Offg. Sanitary Commissioner for Bengal.

Vital Statistics of Towns in Bengal with a population of 20,000 and over during the month of June 1902.

Districts.	Towns.	Population under registration.	Births.		Deaths.																Average of corresponding month of previous five years.		Remarks.
					Cholera.		Small-pox.		Plague.		Fever.		Dysentery and Diarrhœa.		Respiratory diseases.		Injury.		Other causes.		Total of all causes.				
			Number registered.	Ratio per 1,000 of population per annum.	Number registered.	Ratio per 1,000 of population per annum.	Number registered.	Ratio per 1,000 of population per annum.	Number registered.	Ratio per 1,000 of population per annum.	Number registered.	Ratio per 1,000 of population per annum.	Number registered.	Ratio per 1,000 of population per annum.	Number registered.	Ratio per 1,000 of population per annum.	Number registered.	Ratio per 1,000 of population per annum.	Number registered.	Ratio per 1,000 of population per annum.	Number registered.	Ratio per 1,000 of population per annum.	Number registered.	Ratio per 1,000 of population per annum.	
1	2	3	4	5	6	7	8	9	10	11	12	13	14	15	16	17	18	19	20	21	22	23	24	25	26
Burdwan	1. Burdwan	35,022	46	15·72	2	·60	...	...	...	...	51	17·40	6	2·04	...	...	5	1·68	11	3·72	75	25·68	62	21·24	
Bankura	2. Bankura	20,737	36	20·76	...	...	2	1·08	...	...	8	4·56	1	·48	...	...	1	·48	7	3·96	19	10·92	29	16·68	
Midnapore	3. Midnapore	33,140	58	21·00	2	3·24	4	1·44	...	...	48	17·28	15	5·40	...	...	5	1·80	25	9·00	106	38·28	81	29·28	
Hooghly	4. Hooghly and Chinsura	29,383	46	18·72	1	·36	...	...	...	...	47	19·08	18	7·32	3	1·20	3	1·20	14	5·64	86	35·04	64	26·04	
	5. Serampore	44,451	53	22·32	4	·96	1	·24	...	...	61	16·44	15	3·96	...	...	2	·48	18	4·80	101	27·24	85	22·92	
Howrah	6. Howrah	157,594	196	14·76	48	3·60	3	·12	17	1·20	168	12·60	79	6·00	...	...	6	·36	126	9·48	445	33·84	301	22·80	
	7. Cossipore-Chitpur	40,750	35	10·20	7	2·04	...	...	...	...	15	4·32	6	1·68	...	...	...	...	9	2·64	37	10·80	28	8·16	
	8. Maniktala	33,387	32	11·76	3	1·08	2	·72	...	...	8	2·88	1	·36	...	...	1	·36	11	3·96	26	9·60	28	10·32	
	9. South Suburban	26,374	23	14·52	6	2·64	...	...	...	...	50	22·68	1	·36	...	...	3	1·32	4	1·80	64	29·04	68	30·84	
24-Parganas	10. Garden Reach	23,211	33	16·56	1	·36	...	...	...	...	30	12·72	1	·36	...	...	2	·84	1	·36	35	14·88	Data not available.		
	11. Barnagore	25,452	20	9·36	9	4·20	...	...	...	...	12	5·64	5	2·28	...	...	...	...	8	3·72	34	15·96	75	35·28	
	12. Naihati	23,753	17	8·59	1	·48	...	...	...	...	33	16·08	2	·96	...	...	...	...	2	·96	37	18·60	46	23·16	
	13. Bhatpara	21,540	33	17·76	...	...	...	...	...	...	13	7·20	4	2·16	...	...	1	·48	7	3·84	25	13·92	Data not available.		
Calcutta	14. Calcutta	847,796	742	10·44	137	1·92	6	·08	258	3·60	338	4·68	159	2·16	180	2·52	38	·48	693	9·72	1,909	25·56	1,656	23·40	
Nadia	15. Krishnagar	24,547	43	21·00	18	9·24	...	...	...	...	31	15·12	1	·48	...	...	...	...	9	4·32	59	28·80	29	14·16	
	16. Santipur	26,898	62	27·60	...	...	...	...	...	...	41	18·24	1	·36	...	...	1	·36	6	2·16	48	21·36	41	18·24	
Murshidabad	17. Berhampore	24,397	19	9·24	2	·96	...	...	...	...	24	11·76	...	...	...	...	1	·48	2	·96	29	14·16	37	18·12	
Rajshahi	18. Rampur Boalia	21,589	29	16·08	...	...	...	...	...	...	31	17·16	2	1·08	...	...	1	·48	7	3·84	41	22·68	43	23·28	
Pabna	19. Sirajganj	23,114	36	18·60	...	...	1	·48	...	...	19	9·84	...	...	...	...	2	·96	2	·96	24	12·36	23	11·88	
Dacca	20. Dacca	90,542	156	20·64	19	2·40	1	·12	...	...	100	13·20	14	1·80	...	...	5	·60	71	9·36	210	27·72	175	23·16	
	21. Narayanganj	24,472	27	13·20	...	...	...	...	...	...	9	4·32	8	3·84	...	...	1	·48	11	5·28	29	14·16	18	8·76	
Chittagong	22. Chittagong	22,140	39	21·12	...	...	...	...	...	...	46	24·84	...	...	...	...	1	·48	3	1·56	50	27·00	64	34·68	
Patna	23. Patna City	134,785	310	27·48	70	6·12	31	2·64	...	...	180	15·96	44	3·84	2	·12	22	1·92	170	15·12	519	46·20	507	45·12	
	24. Bihar	45,063	135	35·88	120	34·32	6	1·56	...	...	54	14·28	10	2·64	...	...	1	·48	63	16·68	264	70·20	94	24·96	
	25. Dinapore	33,699	76	27·00	4	1·32	4	1·32	...	...	55	19·56	10	3·48	...	...	5	1·68	42	14·88	120	42·72	86	30·60	
Gaya	26. Gaya	71,288	169	28·44	17	2·76	4	·60	...	...	134	22·44	33	6·36	...	...	7	1·08	69	11·52	269	45·24	254	42·72	
Shahabad	27. Arrah	46,170	96	24·84	...	...	...	...	3	·72	37	9·60	·5	1·20	...	...	2	·48	13	3·36	60	15·48	96	24·84	
	28. Sasaram	23,648	108	54·72	...	...	...	...	...	...	54	27·36	...	...	...	...	2	·96	7	3·48	63	31·92	73	36·96	
Saran	29. Chapra	45,901	111	28·92	4	·96	3	·72	5	1·20	45	11·76	18	4·68	...	...	7	1·80	106	27·60	188	49·32	139	36·24	
Champaran	30. Bettiah	24,696	65	31·56	8	3·84	1	·48	...	...	31	15·00	1	·48	...	...	1	·48	18	8·64	60	29·04	80	38·76	
Muzaffarpur	31. Muzaffarpur	45,617	121	31·80	71	18·60	14	3·60	...	...	127	33·36	16	4·20	...	...	8	2·04	36	9·36	272	71·52	127	33·36	
	32. Hajipur	21,398	64	35·88	2	1·08	...	...	...	...	30	16·80	10	5·52	...	...	5	2·76	46	25·68	93	52·08	71	39·72	
Darbhanga	33. Darbhanga	66,244	202	36·48	17	3·00	2	·36	...	...	46	8·28	11	1·92	...	...	6	1·08	120	21·72	202	36·48	253	45·72	
Monghyr	34. Monghyr	35,880	140	46·80	4	1·32	...	...	30	9·96	27	9·00	7	2·28	...	...	2	·60	51	17·04	121	40·44	134	44·76	
Bhagalpur	35. Bhagalpur	75,760	148	23·40	6	·84	4	·60	...	...	85	13·44	1	·12	...	...	1	·12	36	5·64	133	21·00	160	25·32	
Cuttack	36. Cuttack	51,364	133	30·96	6	1·32	...	...	...	...	48	11·16	15	3·48	...	...	1	·12	28	6·48	98	22·80	79	18·36	
Balasore	37. Balasore	20,880	51	29·28	1	·48	...	...	...	...	13	7·44	3	1·68	...	...	1	·48	11	6·24	29	16·56	44	25·20	
Puri	38. Puri	49,334	35	8·40	36	8·64	1	·24	...	...	37	8·88	17	4·08	2	·48	3	·72	40	9·72	136	33·00	128	31·08	
Ranchi	39. Ranchi	25,970	27	12·36	...	...	...	...	...	...	13	6·00	2	·84	...	...	...	...	6	2·76	21	9·60	44	20·28	
	Total of all towns with a population of 20,000 and over	2,441,962	3,815	18·72	642	3·12	90	·36	313	1·44	2,196	10·68	547	2·64	187	·84	154	·72	1,908	9·36	6,037	29·64	5,321	26·04	
	Average of the corresponding month of previous five years	.....	3,468	17·04	622	3·00	97	·36	Data not available.		2,157	10·56	508	2·40	Data not available.		122	·48	1,815	8·88	5,321	26·04	...	...	
	Difference + or −	.....	+347	+1·68	+20	+·12	−7	Equal			+39	+·12	+39	+·24			+32	+·24	+93	+·48	+716	+3·60	...	...	

OFFICE OF SANITARY COMMISSIONER FOR BENGAL,
The 16th August 1902.

B. H. DEARE, CAPTAIN I.M.S.,
Offg. Sanitary Commissioner for Bengal.

GOVERNMENT OF BENGAL, IRRIGATION DEPARTMENT.

Approximate return of traffic on the Circular and Eastern Canals for the week ending Saturday, the 16th August 1902, as compared with the corresponding week of the previous year.

Nature of Cargo.	Week ending Saturday, the 16th August 1902.			Week ending Saturday, the 17th August 1901.		
	Number of boats.	Weight of cargo.	Tollage.	Number of boats.	Weight of cargo.	Tollage.
		Mds.	Rs.		Mds.	Rs.
Rice and paddy	432	47,925	637	282	33,700	478
Jute	43	8,550*	113	54	6,020†	95
Firewood	69	61,450	928	96	61,000	999
Other articles	530	1,26,737	1,404	539	1,17,569	1,378
Total ...	1,074	2,44,662	3,082	971	2,18,289	2,360

* Weight by canal measurement, 9,212 maunds.
† Ditto ditto, 6,912½ ,,

Results of the Meteorological Observations taken at the Alipore Observatory from 10th to 16th August 1902.

Month.	Date.	Maximum in sun.	Number of hours of bright sunshine.	Mean pressure barometer at 32° Fahr.	Temperature. Mean.	Maximum.	Range.	Minimum.	Hygrometry. Mean wet bulb.	Vapour tension.	Dew point.	Humidity.	Wind. Prevailing direction.	Miles recorded.	Rain.	Weather.
1902.		°		Inches	°	°	°	°	°	Inch.	°	%			Inches.	
Aug.	10th	118·2	Nil	29·613	82·5	86·1	7·8	78·3	79·9	0·937	78·8	89	SSW and WSW	181	1·29	Cloudy, o, d, p, t
,,	11th	127·1	0 1	·643	80·1	83·8	9·1	74·7	77·6	·916	76·6	89	WNW and WSW	60	1·76	Chiefly cloudy, o, g d. p
,,	12th	146·1	4·0	·651	84·3	91·2	13·0	78·2	80·0	·970	78·8	83	SW by W and SW	108	Nil	Chiefly cloudy
,,	13th	147·2	7·8	·630	85·4	94·2	15·4	78·8	81·2	1·013	79·6	84	SW by W and WNW.	79	0 17	Partially cloudy, p
,,	14th	145·0	8·1	·612	86·0	93·4	13·4	80 0	82·0	1 040	80 4	84	WNW and SE .	50	0 07	Chiefly cloudy, o d.
,,	15th	149·8	5·8	·621	86·0,	93 2	13·6	79 6	81·9	1·089	80·4	84	SSW, SE by E and variable	55	Nil	Partially cloudy, p.
,,	16th	158·7	4·2	·684	84·9	91·2	11·8	79·4	81 1	1·013	79·6	85	SE by E and calm	40	0·03	Chiefly cloudy, d.

The mean pressure of the seven days	Inches.	29·629
The average pressure of the corresponding period for 24 years, Surveyor-General's Office		29·590
The total number of hours of bright sunshine	Hours	25·0
The maximum possible number of hours of sunshine		90·4
The mean temperature of the seven days	°	84·2
The average temperature of the corresponding period for 24 years, Surveyor-General's Office		83·1
The extreme variation of temperature		19 5
The maximum temperature		94·2
The highest velocity of the wind in one hour	Miles.	16
The mean relative humidity	%	85
The average relative humidity of the corresponding period for 24 years, Surveyor-General's Office		86
The total fall of rain from 10th to 16th August 1902	Inches.	3·32
The average fall of the corresponding period for 24 years, Surveyor-General's Office		3 85
The total fall from 1st January to 16th August 1902		43·20
The average fall of the corresponding period for 24 years, Surveyor-General's Office		42·29

The mean pressure, temperature, etc., are deduced from the traces of the Barograph and Thermograph.

The maximum and minimum temperatures are obtained from self-registering thermometers. All the thermometers are verified and the readings have been corrected to a standard constructed and verified at the Kew Observatory. They are exposed under a thatched shed open at the sides, and are suspended four feet above the ground.

The barometer readings are corrected approximately to those of the standard, Newman's No. 86, formerly at the Surveyor-General's Office.

The hygrometric elements are obtained from Tables III, IV, and V of the official tables computed in the Meteorological Office, and based on Regnault's modifications of August's formula

The directions and the movement of the wind are taken from the trace of a Beckley's anemograph.

The mouth of the rain-gauge is one foot above the ground.

o, overcast; d, drizzling rain; p, passing temporary showers; t. thunder; g. gloomy.

METEOROLOGICAL OFFICE, GOVT. OF INDIA,
Alipore (Calcutta), the 18th August 1902.

G. W. KÜCHLER
for *Meteorological Reporter to the Govt. of India, and Director-General of Indian Observatories.*

BENGAL AND NORTH-WESTERN RAILWAY.

Statement of goods traffic for the month of March 1902 compared with the corresponding period in 1901.

Description of Goods.	1901.		1902.		Increase.		Decrease.		Explanation of fluctuations by the Traffic Manager.
	Tons.	Rs.	Tons.	Rs.	Tons.	Rs.	Tons.	Rs.	
I.—Apparel, including drapery, haberdashery, millinery, uniforms, accoutrements, boots and shoes.	75	606	46	407	.....	.....	29	199	Increased demand for brick-burning.
II.—Coal and coke carried for the Public and Foreign Railways.	7,136	13,276	13,405	23,614	6,269	10,338	.....	.....	
III.—Cotton—									
1. Raw	17	253	37	381	20	128	.....	.....	
2. Manufactured—									
(a) (b) Twist and yarn. European	31	257	23	176	.....	.....	9	81	
(a) (b) Twist and yarn. Indian ...	308	2,763	331	3,907	23	1,124	.....	.....	
(c) (d) Piece-goods. European	1,665	12,118	1,171	10,276	.....	.....	494	1,842	
(c) (d) Piece-goods. Indian ...	281	2,384	744	6,425	463	4,041	.....	.....	
(e) Others	1	10	9	75	8	65	.....	.....	
IV.—Chemicals, excepting saltpetre	.....	.....	27	220	27	220	.....	.....	
V.—Drugs—									
1. Intoxicating, other than opium.	4	45	6	149	2	104	.....	.....	
2. Non-intoxicating—									
(a) Medicinal preparations.	.....	.....	2	20	2	20	.....	.....	
(b) Others	358	2,063	561	3,313	173	350	.....	.....	
VI.—Dyes and Tans—									
1. Al (Morinda citrifolia)	.....	.....	.....	.....	.....	.....	.....	.....	
2. Alizarine and aniline dyes.	8	63	4	45	.....	.....	.....	17	
3. Cutch	11	70	20	199	9	129	4	.....	
4. Indigo	23	86	66	421	43	335	.....	.....	
5. Myrabolams	1	11	7	53	6	42	.....	.....	
6. Tanning barks	377	1,900	232	178	.....	.....	145	1,722	
7. Turmeric	907	6,613	944	6,754	37	141	.....	.....	
8. Others	81	490	238	2,215	157	1,725	.....	.....	
VII.—Fodder—									
1. Oilcake	786	1,780	687	1,493	.....	.....	99	287	
2. Hay, straw and grass...	1,516	9,014	1,123	6,415	.....	.....	393	2,599	
VIII.—Fruits and vegetables, fresh	2,080	5,890	178	602	.....	.....	1,902	5,276	
IX.—Grain and Pulse—									
1. Gram and pulse ...	1,883	7,443	3,861	16,926	1,978	9,483	.....	.....	
2. Jawar and bajra ...	445	1,506	1,111	5,253	666	3,747	.....	.....	Demand in Chapra district.
3. 4. Rice in the husk ...	3,036	11,577	3,728	15,959	693	4,082	.....	.....	Demand in Chapra district.
3. 4. Rice not in the husk	27,947	1,17,068	11,692	66,982	.....	.....	16,255	50,086	
									Defective crops in Darbhanga district.
5. Wheat	298	2,431	1,136	6,468	838	4,037	.....	.....	
6. Wheat-flour	141	906	194	1,642	53	736	...	.....	
7. Makai	6,768	28,487	7,904	38,948	1,136	10,461	.....	.....	Demand in Chapra district.
8. Others	3,588	15,446	2,016	8,336	.....	.....	1,572	7,110	
X.—Hides and Skins—									
1. Hides of cattle—									
(a) Dressed or tanned	3	24	.....	.....	.....	.....	3	24	
(b) Raw	825	4,760	678	4,243	.....	.....	147	517	
2. Skins of sheep and other animals—									
(a) Dressed or tanned	2	9	.....	.....	.....	.....	2	9	
(b) Raw	269	1,010	134	759	.....	.....	135	251	
XI.—Horns	7	32	28	252	21	220	.....	.....	
XII.—Hemp (Indian) and other fibres, excluding jute.	32	223	80	487	48	264	.....	.....	
XIII.—Jute—									
1. Raw	127	626	84	629	.....	3	43	.....	
2. Gunny-bags and cloth	1,566	5,954	1,291	6,664	.....	.....	275	2,290	
XIV.—Lac	217	883	153	481	.....	.....	64	402	
XV.—Leather—									
1. Unwrought	.....	.....	.....	.....	.....	.....	.....	.....	
2. Wrought, excepting boots and shoes.	6	40	2	20	.....	.....	4	20	
XVI.—Liquors—									
1. Ale and Beer	3	22	4	26	1	4	.....	.....	
2. Spirits of all kinds, including country spirits.	.....	.....	3	34	3	34	.....	.....	
3. Wine	11	117	17	214	6	97	.....	.....	
4. All other sorts, including toddy and fermented liquor, other than ale and beer.	.....	.....	.....	.....	.....	.....	.....	.....	
XVII.—Metals—									
1. Brass, unwrought ...	14	105	30	273	16	168	.....	.....	
2. ,, wrought ...	154	1,037	163	1,186	9	149	.....	.....	
3. Copper, unwrought ...	.....	.....	1	12	1	12	.....	.....	
4. ,, wrought ...	14	128	13	133	.....	5	1	.....	
5. Iron and steel—									
(a) Cast	43	291	319	169	276	.....	.....	122	
(b) Unwrought ...	5	28	1	2	.....	.....	4	26	
(c) Wrought	463	2,131	594	3,097	131	966	.....	.....	
(d) Manufactures ...	275	2,077	323	2,166	48	89	.....	.....	
6. Others	425	2,649	255	1,509	.....	.....	170	1,140	
XVIII.—Oils—									
1. Kerosine	2,007	6,561	1,078	3,024	.....	.....	929	3,637	
2. Castor	9	69	9	59	.....	.....	.....	10	
3. Cocoanut	8	44	12	77	4	33	.....	.....	
4. Mustard and rape ...	17	75	9	101	.....	26	8	.....	
5. Others	20	163	19	224	.....	61	1	.....	

Description of Goods.	1901.		1902.		Increase.		Decrease.		Explanation of fluctuations by the Traffic Manager.
	Tons.	Rs.	Tons.	Rs.	Tons.	Rs.	Tons.	Rs.	
XIX.—Oilseeds—									
1. Castor	127	548	293	1,257	166	709	.....	.....	
2. Earthnuts	.....	.....	.....	.....	.....	.....	.....	.....	
3. Linseed	1,077	3,901	883	3,251	.....	.....	194	740	
4. Poppy	.....	.....	4	35	4	31	.....	.....	
5. Rape and mustard	3,459	23,343	9,398	39,045	5,939	15,802	...	.....	Demand for export.
6. Til or jinjili	102	439	14	84	.....	.....	88	355	
7. Others	982	5,477	378	1,037	.....	.....	604	3,540	
XX.—Opium	14	259	25	401	11	142	.....	.....	
XXI.—Paper and Pasteboard	30	223	58	634	19	411	.....	.....	
XXII.—Provisions—									
1. Dried fruits and nuts	79	760	104	1,094	25	334	.....	.....	
2. Ghee	424	3,484	444	3,883	20	399	.....	.....	
3. Others	263	1,390	2,805	9,218	2,542	7,828	.....	.....	
XXIII.—Railway Plant and Rolling Stock carried for the Public and Foreign Railways—									
1. Locomotive engines and tenders and parts thereof.	.....	.....	.....	.....	.....	.. ...	.....	.....	
2. Carriages and trucks and parts thereof.	.....	.....	.....	.....	.....	.....	.....	.....	
3. Materials—									
(a) Steel rails and fish-plates.	.....	.....	.....	.....	.....	... ..	.....	.....	
(b) Sleepers and keys of steel and cast-iron.	3	13	6	10	3	.....	...	3	
(c) Others	.....	.....	.....	.....	.....	.....	.....	... ..	
XXIV.—Salt	9,530	22,581	10,310	37,390	780	14,809	.....	.....	Opening of extensions.
XXV.—Saltpetre and other saline substances—									
1. Saltpetre	902	2,993	1,539	5,096	637	2,103	.....	.... .	Demand in Calcutta.
2. Other saline substances	5	10	78	340	73	330	.....	.....	
XXVI.—Silk—									
1. Raw—									
(a) Foreign	.....	.....	.....	.....	.....	.....	.....	.....	
(b) Indian	1	2	1	 4	.....	2	.....	... ..	
2. Piece-goods—									
(a) Foreign	.....	.....	.....	.....	.....	.....	.....	.....	
(b) Indian	.....	.....	.....	.....	.....	.....	.....	.....	
XXVII.—Spices—									
1. Betelnuts	423	2,887	254	1,953	.....	.....	169	934	
2. Cardamoms	13	196	84	819	72	623	.....	.....	
3. Chillies	602	5,181	1,355	9,370	563	4,189	.....	.....	Traffic to Lower Bengal.
4. Ginger	27	246	30	247	3	1	.....	.....	
5. Pepper	23	198	41	364	18	166	.....	.....	
6. Others	291	2,555	368	3,074	77	519	.....	.....	
XXVIII.—Stone and lime	570	1,859	1,384	3,018	814	1,159	.....	.....	
XXIX.—Sugar—									
1. Refined or crystallised, including sugarcandy.	3,104	17,135	3,402	23,854	298	6,719	.....	.....	Increased production.
2. Unrefined—									
(a) Sugar	800	5,431	1,274	9,797	414	4,366	.....	... ..	
(b) Gur, rab, jaggery, molasses and other saccharine produce.	12,359	55,703	11,941	61,810	.....	6,107	418	.....	
XXX.—Tea—									
1. Foreign	.....	.....	.....	.....	.....	.....	.....	.....	
2. Indian	1	7	38	179	37	172	.....	.....	
XXXI.—Tobacco—									
1. Unmanufactured	2,787	20,312	1,037	7,618	.....	.....	1,750	12,694	Less demand.
2. Manufactured—									
(a) Cigars	1	15	6	80	5	65	.....	.....	
(b) Other sorts	21	195	90	1,013	69	818	.....	.....	
XXXII.—Wood—									
1. Timber, unwrought	522	2,002	1,088	3,119	566	1,117	.....	.....	
2. Logs	1,120	2,441	1,050	2,294	.....	... ..	70	147	
3. Poles	16	20	8	28	.....	48	8	.....	
4. Manufactures	148	604	234	1,232	86	568	.....	.....	
XXXIII.—Wool—									
1. Raw	.....	.....	4	21	4	21	.....	.....	
2. Manufactured—									
(a) Carpets and rugs	.	.....	1	5	1	5	.....	.. ..	
(b) (c) Piece-goods { European / Indian	 1	 11	 6	 52	 5	 41	....	... .	
(d) Other sorts of manufactures.	.....	.....	1	9	1	9	.....	.....	
XXXIV.—All other articles of merchandise—									
1. Indigo-seed	870	4,178	1,032	7,042	162	2,864	.....	.....	
2. Firewood	3,103	7,543	2,073	2,936	.....	.....	1,090	3,607	
3. Others not specified above.	5,159	33,494	5,365	14,776	206	.....	.....	19,718	
Total	115,507	5,05,559	115,198	5,18,072	20,770	1,35,920	27,088	1,18,407	

J. LIGHTFOOT,
Chief Auditor.

GORAKHPUR, *the 16th August 1902.*

EASTERN BENGAL STATE RAILWAY.

Abstract of Principal Commodities carried over the Eastern Bengal State Railway during the month of April 1902 as compared with the same month of the previous year.

No.	Staples.	1902.	1901.	Increase in 1902.	Decrease in 1902.	Explanations of fluctuations by Traffic Superintendent.
		Tons.	Tons.	Tons.	Tons.	
1	Apparel, including drapery, haberdashery, millinery, uniforms, accoutrements, boots and shoes.	37	18	19	.....	
2	Coal and coke carried for the Public and Foreign Railways.	24,453	17,964	6,489	.....	
3	Cotton—					
	(1) Raw	221	351	.....	130	
	(2) Manufactured—					
	(a) Twist and yarn, European	217	201	16	.....	
	(b) Ditto, Indian	199	307	.....	108	
	(c) Piece-goods, European	1,986	1,800	186	.....	
	(d) Ditto, Indian	51	25	26	.....	
	(e) Others	.....	.....	.....	.....	
4	Chemicals, excepting saltpetre	38	13	25	.....	
5	Drugs—					
	(1) Intoxicating, other than opium	77	46	31	.....	
	(2) Non-intoxicating—					
	(a) Medicinal preparations	.....	.....	.....	.....	
	(b) Others	108	42	66	.....	
6	Dyes and Tans—					
	(1) Al (Morinda citrifolia)	.....	.....	.....	.....	
	(2) Alizarine and Aniline dyes	.....	.....	.....	.....	
	(3) Cutch	11	13	.....	2	
	(4) Indigo	.....	.....	.....	.....	
	(5) Myrabolams	.....	.....	.....	.....	
	(6) Tanning barks	.....	.....	.....	.....	
	(7) Turmeric	818	590	228	.....	
	(8) Others	9	5	4	.....	
7	Fodder—					
	(1) Oilcake	644	643	.....	4	
	(2) Hay, straw and grass	2,520	2,278	242	.....	
8	Fruits and vegetables, fresh	856	405	451	.....	
9	Grain and pulse—					
	(1) Gram and pulse	10,018	3,709	6,309	.....	
	(2) Jawar and bajra	...	.....	.....	.....	
	(3) Rice in the husk	7,558	8,642	.....	1,084	
	(4) Do. not in the husk	7,929	7,351	578	.....	
	(5) Wheat	671	284	387	.....	
	(6) Do. flour	374	125	249	.....	
	(7) Others	178	89	89	.....	
10	Hides and skins—					
	(1) Hides of cattle—					
	(a) Dressed or tanned	.....	.....	.....	.....	
	(b) Raw	936	488	448	.....	
	(2) Skins of sheep and other animals—					
	(a) Dressed or tanned	.....	.....	.....	.....	
	(b) Raw	55	74	.....	19	
11	Horns	3	1	2	.....	
12	Hemp (Indian) and other fibres, excluding jute.	289	602	.....	313	
13	Jute—					
	(1) Raw	26,192	11,107	15,085	.....	
	(2) Gunny-bags and cloth	1,998	1,581	417	.....	
14	Lac	13	83	.....	70	
15	Leather—					
	(1) Unwrought	.....	.....	.....	.....	
	(2) Wrought, excepting boots and shoes ..	.....	1	.....	1	
16	Liquors—					
	(1) Ale and beer	28	24	4	.....	
	(2) Spirits of all kinds, including country spirit.	.....	.....	.....	.....	
	(3) Wine	86	55	31	.....	
	(4) All other sorts, including toddy and fermented liquor, other than ale and beer.	.....	.....	.....	.....	
17	Metals—					
	(1) Brass, unwrought	77	25	52	.....	
	(2) Do., wrought	151	99	52	.....	
	(3) Copper, unwrought	75	11	64	.....	
	(4) Do., wrought	70	7	63	.....	
	(5) Iron and steel—					
	(a) Cast	94	179	.....	85	
	(b) Unwrought	11	.....	11	.....	
	(c) Wrought	1,594	1,336	258	.....	
	(d) Manufactures	501	225	276	.....	
	(6) Others	231	187	44	.....	
18	Oils—					
	(1) Kerosine	11,960	5,810	6,150	.....	
	(2) Castor	13	13	.....	.....	
	(3) Cocoanut	175	154	21	.....	
	(4) Mustard and rape	282	444	.....	162	
	(5) Others	58	105	.....	47	
19	Oilseeds—					
	(1) Castor	.....	.....	.....	.....	
	(2) Earthnuts	.....	.....	.....	.....	
	(3) Linseed	6,355	931	5,424	.....	
	(4) Poppy	.....	.....	.....	.....	
	(5) Rape and mustard	7,492	3,140	4,352	.....	
	(6) Til or jinjili	31	4	27	.....	
	(7) Others	82	10	72	.....	
20	Opium	5	.....	5	.....	
21	Paper and pasteboard	594	332	262	.....	
22	Provisions—					
	(1) Dried fruits and nuts	3	.....	3	.....	
	(2) Ghee	52	48	4	.....	
	(3) Others	1,169	1,124	45	.....	

No.	Staples.	1902.	1901.	Increase in 1902.	Decrease in 1902.	Explanations of fluctuations by Traffic Superintendent.
		Tons.	Tons.	Tons.	Tons.	
23	Railway Plant, &c., for the Public and Foreign Railways—					
	(1) Locomotive engines and tenders and parts thereof.	59	.....	59	.....	
	(2) Carriages and trucks and parts thereof	34	118	.....	84	
	(3) Materials—					
	(a) Steel rails and fish-plates	.....	129	.....	129	
	(b) Sleepers and keys of steel and cast-iron.	153	13	140	.....	
	(c) Others	586	107	479	.....	
24	Salt	7,690	6,126	1,564	.....	
25	Saltpetre and other saline substances—					
	(1) Saltpetre	.....	4	.....	4	
	(2) Other saline substances	78	46	32	.....	
26	Silk—					
	(1) Raw—					
	(a) Foreign	.....	.....	.....	.....	
	(b) Indian	23	3	20	.....	
	(2) Piece-goods—					
	(a) Foreign	.....	.....	.....	.....	
	(b) Indian	.....	.....	.....	.....	
27	Spices—					
	(1) Betelnuts	868	695	173	.....	
	(2) Cardamoms	29	27	2	.....	
	(3) Chillies	177	213	.....	36	
	(4) Ginger	163	90	73	.....	
	(5) Pepper	38	40	.....	2	
	(6) Others	160	280	.....	120	
28	Stone and lime	3,220	1,479	1,741	.....	
29	Sugar—					
	(1) Refined or crystallized, including sugar-candy.	853	694	159	.....	
	(2) Unrefined—					
	(a) Sugar	850	750	100	.....	
	(b) Gur, *rab*, jaggery, molasses, and other saccharine produce.	951	1,871	.....	920	
30	Tea—					
	(1) Foreign	.....	.....	.....	.....	
	(2) Indian	334	73	261	.....	
31	Tobacco—					
	(1) Unmanufactured	2,875	4,320	.....	1,445	
	(2) Manufactured—					
	(a) Cigars	27	2	25	.....	
	(b) Other sorts					
32	Wood—					
	(1) Timber, unwrought	955	787	168	.....	
	(2) Manufactures	402	184	218	.....	
33	Wool—					
	(1) Raw	252	136	116	.....	
	(2) Manufactured—					
	(a) Carpets and rugs	14	20	.....	6	
	(b) Piece-goods, European					
	(c) Ditto, Indian					
	(d) Other sorts of manufactures ...					
34	All other articles of merchandise	2,791	6,956	2,835	.....	
	Total ...	150,239	98,278	50,732	4,771	

Calcutta, *the 11th August 1902.*

Harprasad Dar,
for *Examiner of Accounts, E. B. S. Railway.*

Weekly Return of Traffic Receipts on Indian Railways.

EAST INDIAN RAILWAY.

Approximate Return of Traffic for week ended 26th July 1902, on 1,913·49 miles open.

	Coaching Traffic.		Merchandise and Mineral Traffic.		Other earnings (estimated).	Total earnings.	Traffic Train-miles run.		
	Number of passengers.	Coaching receipts.	Weight carried.	Receipts.			Coaching.	Merchandise.	Total.
		Rs. A. P.	Mds. s.	Rs. A. P.	Rs. A. P.	Rs. A. P.			
	(a)	(a)		(b)					
Total traffic for the week ...	369,578	3,75,199 2 0	42,41,383 10	7,30,927 11 0	29,483 0 0	11,35,609 13 0	111,027	162,333	273,960
Or per mile of railway ...	.....	196 1 4	... ...	381 15 9	15 6 6	593 7 7	... ..	...	.....
For previous 2½ weeks of half-year	1,143,633	10,59,954 2 0	1,29,10,372 0	22,22,335 2 0	65,293 0 0	33,47,572 4 0	292,605	485,538	778,143
Total for 3½ weeks ...	1,513,211	14,35,153 4 0	1,71,51,755 10	29,53,262 13 0	94,776 0 0	44,83,182 1 0	404,232	647,871	1,052,103
Comparison.									
Total for corresponding week of previous year	436,037	4,34,998 5 2	50,18,439 30	9,75,870 0 10	20,231 2 0	14,31,099 8 0	111,038½	213,678	325,316½
Per mile of railway corresponding week of previous year	.....	236 10 7	.....	530 14 1'	11 0 1	778 9 7	.....	.....	.....
Total for corresponding 3½ weeks of previous year	1,529,0584	15,73,215 9 8	2,04,98,618 0	38,50,909 3 3	73,718 13 10	54,97,843 10 9	417,234	820,901	1,238,135

(a) The decrease is due (1) to the running of 7 extra troop trains from Kidderpore Docks to Agra Fort, Fyzabad and Jhelum and (2) to "Ulta Rath Jatra" festival in the corresponding period of 1901.
(b) The decrease is chiefly in coal and seeds.

1902. *Abstract of progressive weekly returns of all earnings for 1902 in comparison with 1901.*

Open mileage.	Period.	Coaching Traffic.		Merchandise and Mineral Traffic.		Other earnings.	Total.	Per mile of railway.	Train mileage.	
		No. of passengers.	Rs.	Mds.	Rs.	Rs.	Rs.	Rs.	No.	Rate. Rs. A. P.
1,913·49	19 days of July ...	704,605	6,77,471	84,01,481	14,45,112	38,006	21,60,089	1,129	406,764	4 5 7
1,913·49	Week ended 19th ,, ...	430,028	3,82,383	45,04,891	7,77,213	27,287	11,86,883	620	281,380	4 3 6
1,913·49	,, ,, 26th ,, ...	369,578	3,75,199	42,41,383	7,30,927	29,483	11,35,610	593	273,960	4 2 4
	Totals up to date ...	1,513,211	14,35,153	1,71,51,755	29,53,253	94,776	44,83,182	631	1,052,103	4 4 3

Abstract of progressive weekly returns of all earnings for 1902 in comparison with 1901—concluded. *1901.*

		No. of passengers.	Rs.	Mds.	Rs.	Rs.	Rs.	Rs.	No.	Rate. Rs. A. P.
1,837·16	19 days of July ...	707,203	7,62,573	1,04,38,301	18,92,791	34,034	26,89,400	1,464	540,902	4 9 4
1,837·79	Week ended 20th ,, ...	385,819	3,75,644	54,41,787	9,82,818	19,453	13,77,944	749	325,917	4 3 7
1,838·04	,, ,, 27th ,, ...	436,037	4,34,998	50,18,440	9,75,870	20,231	14,31,099	779	325,316	4 6 5
	Totals up to date ...	1,529,059	15,73,215	2,08,98,618	38,50,909	73,719	54,97,843	776	1,238,135	4 7 1

TARKESSUR BRANCH RAILWAY.

Approximate Return of Traffic for week ended 26th July 1902, on 22·23 miles open.

	Coaching Traffic.		Merchandise and Mineral Traffic.		Other earnings (estimated).	Total earnings.	Traffic Train-miles run.		
	Number of passengers.	Coaching receipts.	Weight carried.	Receipts.			Coaching.	Merchandise.	Total.
		Rs. A. P.	Mds. s.	Rs. A. P.	Rs. A. P.	Rs. A. P.			
	(b)	(b)							
Total traffic for the week	21,027	5,122 8 0	13,0.8 0	371 2 0	8 0 0	5,501 10 0	1,036	102	1,138
Or per mile of railway	... ..	230 6 11	.....	16 11 1	0 5 9	247 7 9	.....	.....	...
For previous 2½ weeks of half-year	67,982	16,319 15 0	28,163 0	1,067 4 0	19 0 0	17,406 3 0	2,970	286	3,256
Total for 3½ weeks ...	89,009	21,442 7 0	41,801 0	1,438 6 0	27 0 0	22,907 13 0	4,006	388	4,444
Comparison.									
Total for corresponding week of previous year	30,433	6,411 5 0	7,351 20	309 15 0	5 12 3	6,727 0 3	1,145	87	1,232
Per mile of railway corresponding period of previous year	.....	288 6 6	.....	13 15 1	0 4 3	302 0 9	.....	.....	...
Total for corresponding 3½ weeks of previous year	91,313	20,854 2 1	33,563 0	1,362 12 0	32 2 3	22,249 0 4	4,339	325	4,664

(b) The decrease is due to "Ulta Ruth Jatra" festival in the corresponding period of 1901.

TARKESSUR BRANCH RAILWAY—*concluded.*

1902. *Abstract of progressive weekly returns of all earnings for 1902 in comparison with 1901.*

Open mileage.	Period.	Coaching Traffic.		Merchandise and Mineral Traffic.		Other earnings.	Total.	Per mile of railway.	Train mileage.	
		No. of passengers.	Rs.	Mds.	Rs.	Rs.	Rs.	Rs.	No.	Rate. Rs. A. P.
22·23	12 days of July ...	38,151	9,698	16,401	653	12	10,361	466	2,068	5 0 2
22·23	Week ended 19th ,, ...	20,831	6,624	11,762	414	7	7,045	317	1,188	5 14 11
22·23	,, ,, 26th ,, ...	21,627	5,123	13,038	371	8	5,502	247	1,188	4 10 1
	Totals up to date ...	80,609	21,443	41,801	1,438	27	22,908	277	4,444	5 2 6

Abstract of progressive weekly returns of all earnings for 1902 in comparis n with 1901—concluded. *1901.*

		No. of passengers.	Rs.	Mds.	Rs.	Rs.	Rs.	Rs.	No.	Rate. Rs. A. P.
22·23	13 days of July ...	41,388	9,910	20,401	786	14	10,714	482	2,244	4 12 5
22·23	Week ended 20th ,, ...	19,522	4,553	5,010	267	8	4,808	216	1,188	4 0 9
22·23	,, ,, 27th ,, ...	30,403	6,411	7,351	310	6	6,727	303	1,332	5 7 4
	Totals up to date ...	91,313	20,854	33,563	1,363	32	22,249	263	4,664	4 12 4

DELHI-UMBALLA-KALKA RAILWAY.

Approximate Return of Traffic for week ended 26th July 1902 on 162·24 miles open.

	Coaching Traffic.		Merchandise and Mineral Traffic.		Other earnings (estimated).	Total earnings.	Traffic Train-miles run.		
	Number of passengers.	Coaching receipts.	Weight carried.	Receipts.			Coaching.	Merchandise.	Total.
		Rs. A. P.	Mds. s.	Rs. A. P.	Rs. A. P.	Rs. A. P.			
Total traffic for the week ..	26,020	19,508 14 0	93,854 10	7,899 12 0	47 0 0	27,752 10 0	8,707	4,221	12,928
Or per mile of railway ..	.....	122 1 3	.....	48 11 1	0 4 7	171 0 11	.....	.....	.....
For previous 2½ weeks of half-year	60,960	47,346 14 0	2,43,279 10	26,768 3 0	138 0 0	74,253 1 0	22,711	11,453	34,164
Total for 3½ weeks ..	86,980	67,152 12 0	3,37,133 20	34,667 15 0	185 0 0	1,02,005 11 0	31,418	15,674	47,092
Comparison.									
Total for corresponding week of previous year	22,024	16,926 10 5	85,777 10	10,092 9 7	42 6 6	29,061 10 6	8,035½	3,198½	11,234
Per mile of railway corresponding week of previous year ...	.....	116 10 6	.....	62 3 4	0 4 2	179 2 0	.....	.....	.....
Total for corresponding 3½ weeks of previous year	87,386	67,920 2 7	4,89,817 0	51,541 6 7	173 7 3	1,10,635 0 5	30,823	14,066½	44,889½

1902. *Abstract of progressive weekly returns of all earnings for 1902 in comparison with 1901.*

Open mileage.	Period.	Coaching Traffic.		Merchandise and Mineral Traffic.		Other earnings.	Total.	Per mile of railway.	Train mileage.	
		No. of passengers.	Rs.	Mds.	Rs.	Rs.	Rs.	Rs.	No.	Rate. Rs. A. P.
162·24	12 days of July ...	38,150	28,888	1,46,156	17,796	84	46,768	288	21,604	2 2 8
162·24	Week ended 19th ,, ...	22,810	18,459	97,123	8,972	54	27,485	169	12,540	2 3 0
162·24	,, ,, 26th ,, ...	26,020	19,806	93,854	7,906	47	27,763	171	12,928	2 2 4
	Totals up to date ...	86,980	67,153	3,37,133	34,668	185	1,02,006	169	47,092	2 2 8

Abstract of progressive weekly returns of all earnings for 1902 in comparison with 1901—concluded. *1901.*

		No. of passengers.	Rs.	Mds.	Rs.	Rs.	Rs.	Rs.	No.	Rate. Rs. A. P.
162·24	13 days of July ...	41,383	31,192	3 15,809	30,744	82	62,018	382	21,945	2 13 3
162·24	Week ended 20th ,, ...	21,979	17,801	88,131	10,705	49	28,555	176	11,711	2 7 0
162·24	,, ,, 27th ,, ...	23,024	18,927	85,877	10,093	43	29,063	179	11,234	2 9 5
	Totals up to date ...	87,396	67,920	4,89,817	51,541	174	1,10,635	191	44,890	2 10 8

SOUTH BEHAR RAILWAY.

Approximate Return of Traffic for week ended 26th July 1902 on 78·76 miles open.

	Coaching Traffic.		Merchandise and Mineral Traffic.		Other earnings (estimated).	Total earnings.	Traffic train-miles run.		
	Number of passengers.	Coaching receipts.	Weight carried.	Receipts.			Coaching.	Merchandise.	Total.
		Rs. A. P.	Mds. S.	Rs. A. P.	Rs. A. P.	Rs. A. P.			
Total traffic for the week	(c) 11,195	(c) 6,518 2 0	46,118 0	2,250 14 0	21 0 0	8,790 0 0	1,947	809	2,756
Or per mile of railway ...	.....	82 12 3	.....	28 9 3	0 4 3	111 9 3	.....	.....	...
For previous 2½ weeks of half-year	31,684	16,412 13 0	1,04,450 20	6,059 7 0	54 0 0	22,526 4 0	5,165	2,553	7,718
Total for 3½ weeks ...	42,879	22,930 15 0	1,50,577 20	8,310 5 0	75 0 0	31,316 4 0	7,112	3,362	10,474
Comparison.									
Total for corresponding week of previous year.	19,906½	8,083 1 7	49,001 30	2,883 0 0	18 0 0	10,984 1 7	2,100	1,207½	3,307½
Per mile of railway corresponding week of previous year.	.....	102 10 1	.....	36 9 8	0 3 8	139 7 5	.....	.....	...
Total for corresponding 3½ weeks of previous year.	52,554½	24,006 4 9	1,36,084 30	12,180 12 0	49 15 8	36,237 0 0	7,714	5,043½	12,757½

(c) The decrease is due to "Rajgir Mela" in the corresponding period of 1901.

1902. *Abstract of progressive weekly returns of all earnings for 1902 in comparison with 1901.*

Open mileage.	Period.	Coaching Traffic.		Merchandise and Mineral Traffic.		Other earnings.	Total.	Per mile of railway.	Train mileage.	
		No. of Passengers.	Rs.	Mds.	Rs.	Rs.	Rs.	Rs.	No.	Rate. Rs. A. P.
78·76	12 days of July ...	20,060	9,776	65,612	4,288	36	14,100	179	5,119	2 12 1
78·76	Week ended 19th ,, ,,	11,624	6,637	38,848	1,771	18	8,426	107	2,599	3 3 11
78·76	,, ,, 26th ,,	11,195	6,518	46,118	2,251	21	8,790	1 2	2,756	3 3 0
	Totals up to date ...	42,879	22,931	1,50,578	8,310	75	31,316	107	10,474	2 15 10

Abstract of progressive weekly returns of all earnings for 1902 in comparison with 1901—concluded. 1901.

		No. of Passengers.	Rs.	Mds.	Rs.	Rs.	Rs.	Rs.	No.	Rate. Rs. A. P.
78·76	13 days of July ...	20,350	10,058	87,747	6,177	24	16,259	206	6,143	2 10 4
78·76	Week ended 20th ,, ...	12,298	5,865	50,336	3,131	8	8,994	114	3,307	2 11 6
78·76	,, ,, 27th ,, ...	19,907	8,083	49,002	2,883	18	10,984	139	3,308	3 5 2
	Totals up to date	52,555	24,006	1,86,985	12,181	50	36,237	119	12,758	2 13 5

EAST INDIAN RAILWAY.

Approximate Return of Traffic for week ended 2nd August 1902, on 1,913 49 miles open.

	Coaching Traffic.		Merchandise and Mineral Traffic.		Other earnings (estimated).	Total earnings.	Traffic Train-miles run.		
	Number of passengers.	Coaching receipts.	Weight carried.	Receipts.			Coaching.	Merchandise.	Total.
		Rs. A. P.	Mds. S.	Rs. A. P.	Rs. A. P.	Rs. A. P.			
Total traffic for the week ,,	(a) 346,160	(a) 3,47,709 6 0	41,34,640 30	(b) 7,14,228 6 0	22,745 0 0	10,84 743 12 0	108,493	175,801	284,300
Or per mile of railway ,,	... ...	181 11 11	..	373 4 2	11 14 3	566 14 3	.....	.....	.. ..
For previous 3½ weeks of half-year.	1,513,211	14,35,153 4 0	1,71,51,755 10	23,53,252 13 0	94,775 0 0	44,83,182 1 0	404,212	647,871	1,052,133
Total for 4½ weeks ,,	1,859,371	17,82,922 10 0	2,12,86,405 0	30,67,481 3 0	1,17,521 0 0	55,67 924 13 0	512,731	823,672	1,336,403
Comparison.									
Total for corresponding week of previous year.	427,684½	4,86,765 6 5	52,95,540 10	9,07,492 2 5	10,952 6 3	14,74,209 15 1	112,874½	222,342½	335,217
Per mile of railway corresponding week of previous year.	.. ...	264 13 3	. ..	526 6 0	10 13 8	802 0 11	.....	.....	.....
Total for corresponding 4½ weeks of previous year.	1,956,643	20,59,961 0 1	2,61,04,158 10	46,18,401 5 8	93,671 4 1	69,72,053 9 10	530,108½	1,043,243½	1,573,352

(a) The decrease is due to the running of several extra troop trains from Kidderpore Docks and extra trains for "Rajgir Mela" in the corresponding period of 1901.
(b) The decrease is chiefly in coal and seeds.

EAST INDIAN RAILWAY—*concluded.*

1902. *Abstract of progressive weekly returns of all earnings for 1902 in comparison with 1901.*

Open mileage.	Period.	Coaching Traffic.		Merchandise and Mineral Traffic.		Other earnings.	Total.	Per mile of Railway.	Train mileage.	
		No. of Passengers.	Rs.	Mds.	Rs.	Rs.	Rs.	Rs.	No.	Rate. Rs. A. P.
1,913·49	12 days of July ...	704,006	6,77,571	84,01,491	14,45,112	38 006	21,00,689	1,129	466,763	4 5 7
1,913·49	Week ended 19th July ..	434,028	3,82,383	47,08,891	7,77,213	27,287	11,86,883	620	281,380	4 3 6
1,913·49	,, ,, 26th ,, .	309,578	3,75,199	43,41,383	7,30,928	29,483	11,35,610	593	273,960	4 2 4
1,913·49	,, ,, 2nd August	346,160	3,47,770	41,34,650	7,14,228	22 735	10,84,743	567	284,300	3 13 1
	Totals up to date ..	1,859,371	17,82,923	2,12,86,405	[36,67,481	1,17,511	55,67,925	617	1,336,403	4 2 8

Abstract of progressive weekly returns of all earnings for 1902 in comparison with 1901—concluded. *1901*

		No. of Passengers.	Rs.	Mds.	Rs	Rs	Rs.	Rs	No.	Rate. Rs. A. P.
1,837·46	13 days of July ..	707,203	7,62,573	1,04,38,391	18,02,701	34,036	26,39,400	1,434	580,902	4 9 4
1,837·79	Week ended 20th July ...	335,819	3,75,044	54,11,787	9,42,248	19,452	13,77,344	740	325,917	4 3 7
1,838·04	,, ,, 27th ,, ...	446 037	4,34,908	50,18,440	9,75,870	20,231	14,31,099	779	325,316	4 6 5
1,838·04	,, ,, 3rd August	427,584	4,86,766	52,93,540	9,67,492	19,932	14,74,210	802	335,217	4 6 4
	Totals up to date ...	1,950,643	20,59,981	2,61,94,158	48,18,401	93,071	69,72,053	781	1,575,352	4 6 11

TARKESSUR BRANCH RAILWAY.

Approximate Return of Traffic for week ending 2nd August 1902, on 22·23 miles open.

	Coaching Traffic.		Merchandise and Mineral Traffic.		Other earnings (estimated).	Total earnings.	Traffic Train-miles run.		
	No. of passengers.	Coaching receipts.	Weight carried.	Receipts.			Coaching.	Merchandise.	Total.
		Rs. A. P.	Mds. s.	Rs. A. P.	Rs. A. P.	Rs. A. P.			
Total traffic for the week ...	(b) 17,703	(b) 4,097 3 0	15,095 30	303 8 0	7 0 0	4,467 11 0	1,084	104	1,188
Or per mile of railway ...	... ..	184 4 11	.....	16 5 8	0 5 0	210 15 7	....	.....	.....
For previous 3½ weeks of half year	89,699	21,442 7 0	41,801 0	1,438 6 0	27 0 0	22,907 13 0	4,056	388	4,444
Total for 4½ weeks ...	107,402	25,539 10 0	56,896 30	1,801 14 0	34 0 0	27,375 8 0	5,140	492	5,632
COMPARISON.									
Total for corresponding week of previous year.	24,863½	5,480 6 4	5,586 0	234 10 0	4 7 6	5,728 7 10	1,154	34	1,188
Per mile of railway corresponding week of previous year.	... .	246 15 0	.....	10 8 10	0 3 3	257 11 1	... ...	.....	.....
Total for corresponding 4½ weeks of previous year.	116,176½	26,343 8 5	39,149 0	1,597 6 0	36 9 9	27,977 8 2	5,493	359	5,852

(b) The decrease is in outward passenger traffic.

1902. *Abstract of progressive weekly returns of all earnings for 1902 in comparison with 1901.*

Open mileage.	Period.	Coaching Traffic.		Merchandise and Mineral Traffic.		Other earnings.	Total.	Per mile of railway.	Train mileage.	
		No. of passengers.	Rs.	Mds.	Rs.	Rs.	Rs.	Rs.	No.	Rate. Rs. A. P.
22·23	12 days of July ...	38,151	3,606	10 401	653	12	10,361	466	2,068	5 0 2
22·23	Week ended 19th July ...	29,831	6,625	11,762	414	7	7,046	317	1,188	5 14 11
22·23	,, ,, 26th ,,	21,627	5,123	13,638	371	8	5,503	247	1,188	4 10 1
22·23	,, ,, 2nd August	17,793	4,097	15,096	363	7	4,467	201	1,188	3 12 2
	Totals up to date ...	107,402	25,340	56,897	1,801	34	27,375	261	5,632	4 13 9

Abstract of progressive weekly returns of all earnings for 1902 in comparison with 1901—concluded. *1901.*

		No. of passengers.	Rs.	Mds.	Rs.	Rs.	Rs.	Rs.	No.	Rate. Rs. A. P.
22·23	13 days of July ...	41,388	9,910	20,802	786	18	10,714	482	2,244	4 12 5
22·23	Week ended 20th July	19,522	4,653	5,910	267	8	4,808	216	1,188	4 0 9
22·23	,, ,, 27th ,,	30,403	6,411	7,351	310	6	6,727	303	1,252	5 7 4
22·23	,, ,, 3rd August	24,864	5,369	5,586	234	5	5,728	258	1,188	4 13 2
	Totals up to date ...	116,177	26 343	39,149	1,597	37	27,977	259	5,852	4 12 6

DELHI-UMBALLA-KALKA RAILWAY.

Approximate Return of Traffic for week ended 2nd August 1902, on 162·24 miles open.

	Coaching Traffic.		Merchandise and Mineral Traffic.		Other earnings (estimated).	Total earnings.	Traffic Train-miles run.		
	No. of Passengers.	Coaching Receipts.	Weight carried.	Receipts.			Coaching.	Merchandise.	Total.
		Rs. A. P.	Mds. s.	Rs. A. P.	Rs. A. P.	Rs. A. P.			
Total traffic for the week	(c) 20,064	(c)19,074 4 0	94,677 30	8,095 11 0	41 0 0	27,210 15 0	8,500	4,623	13,123
Or per mile of railway	...	117 9 1	...	49 14 5	0 4 0	167 11 6	...	...	...
For previous 3½ weeks of half-year	86,980	67,152 12 0	3,87,133 20	34,667 15 0	185 0 0	1,02,005 11 0	31,418	15,674	47,092
Total for 4½ weeks ...	107,044	86,227 0 0	4,31,811 10	42,763 10 0	226 0 0	1,29,216 10 0	39,918	20,297	60,215
Comparison.									
Total for corresponding week of previous year.	21,031½	22,415 12 4	94,502 10	11,812 0 0	60 6 3	34,288 2 7	8,338½	3,024½	11,363
Per mile of railway corresponding week of previous year.	...	138 2 8	...	72 12 11	0 5 11	211 5 6	...	...	...
Total for corresponding 4½ weeks of previous year.	109,017½	90,335 14 11	5,84,319 10	63,363 6 7	233 13 6	1,53,923 3 0	39,161½	17,091	56,252½

(c) The decrease is due to the running of extra troop trains to N.-W. Ry. *vid* Umballa Cantonment in the corresponding period of 1901.

1902. *Abstract of progressive weekly returns of all earnings for 1902 in comparison with 1901.*

Open mileage.	Period.	Coaching Traffic.		Merchandise and Mineral Traffic.		Other earnings.	Total.	Per mile of railway.	Train mileage.	
		Number of Passengers.	Rs.	Mds.	Rs.	Rs.	Rs.	Rs.	No.	Rate. Rs. A. P.
162·24	12 days of July ...	38,150	24,889	1,46,156	17,796	84	46,768	288	21,604	2 2 8
162·24	Week ended 19th ,, ...	22,810	18,459	97,132	8,972	54	27,485	169	12,560	2 3 9
162·24	,, ,, 26th ,, ...	26,020	19,806	93 854	7,900	47	27,753	171	12,928	2 2 4
162·24	,, ,, 2nd Aug. ...	20,064	19,074	94,678	8,096	41	27,211	167	13,123	2 1 5
	Totals up to date ...	107,044	86,227	4,31,811	42,764	226	1,29,217	169	60,215	2 2 4

Abstract of progressive weekly returns of all earnings for 1902 in comparison with 1901—concluded. *1901.*

		Number of Passengers.	Rs.	Mds.	Rs.	Rs.	Rs.	Rs.	No.	Rate. Rs. A. P.
162·24	13 days of July ...	41,983	31,102	3,15,809	30,744	82	62,018	382	21,945	2 13 3
162·24	Week ended 20th ,, ...	28,979	17,801	88,131	10,705	49	28,555	176	11,711	2 7 0
162·24	,, ,, 27th ,, ...	23,024	12,927	85,877	10,093	43	29,062	179	11,254	2 9 5
162·24	,, ,, 3rd Aug. ...	21,032	22,416	94,502	11,812	60	34,288	211	11,363	3 0 2
	Totals up to date .	109,018	90,336	5,84,319	63,353	234	1,53,923	195	56,253	2 11 9

SOUTH BEHAR RAILWAY.

Approximate Return of Traffic for week ended 2nd August 1902, on 78·76 miles open.

	Coaching Traffic.		Merchandise and Mineral Traffic.		Other earnings (estimated).	Total earnings.	Traffic Train-miles run.		
	Number of passengers.	Coaching receipts.	Weight carried.	Receipts.			Coaching.	Merchandise.	Total.
		Rs. A. P.	Mds. s.	Rs. A. P.	Rs. A. P.	Rs. A. P.			
Total traffic for the week	(d) 10,414	(d) 5,543 4 0	33,613 20	2,182 7 0	28 0 0	7,753 11 0	1,932	982	2,914
Or per mile of railway	...	70 6 1	...	27 11 5	0 5 8	98 7 2	...	...	...
For previous 3½ weeks of half-year	42,870	22,930 15 0	1,50,577 20	8,310 5 0	75 0 0	31,316 4 0	7,112	3,362	10,474
Total for 4½ weeks ...	53,203	28,474 3 0	1,84,191 0	10,492 12 0	103 0 0	39,069 15 0	9,044	4,344	13,388
Comparison.									
Total for corresponding week of previous year	32,088	13,655 6 10	51,096 20	3,215 10 0	13 14 6	16,884 15 5	2,077	1,309½	3,386½
Per mile of railway corresponding week of previous year	...	173 6 1	...	40 13 3	0 2 10	214 6 2	...	...	...
Total for corresponding 4½ weeks of previous year	85,542½	37,601 11 8	2,38,081 10	15,396 6 0	63 13 9	53,121 15 5	9,791	6,352½	16,143½

(d) The decrease is due to "Rajgir Mela" in the corresponding period of 1901.

SOUTH BEHAR RAILWAY—*concluded.*

1902. *Abstract of progressive weekly returns of all earnings for 1902 in comparison with 1901.*

Open mileage.	Period.	Coaching Traffic.		Merchandise and Mineral Traffic.		Other earnings.	Total.	Per mile of railway.	Train mileage.	
		Number of passengers.	Rs.	Mds.	Rs.	Rs.	Rs.	Rs.	No.	Rate. Rs. A. P.
78·76	12 days of July ...	20,060	9,776	65,612	4,288	36	14,100	179	5,119	2 12 1
78·76	Week ended 19th ,, ...	11,624	6,037	38,848	1,771	18	8,426	107	2,890	3 3 11
78·76	,, ,, 26th ,, ...	11,195	6,518	46,118	2,251	21	8,790	112	2,756	3 3 0
78·76	,, ,, 2nd Aug. ...	10,414	5,543	33,613	2,183	28	7,754	98	2,914	2 10 7
	Totals up to date ...	53,293	28,474	1,84,191	10,493	103	39,070½	105	13,388	2 14 8

Abstract of progressive weekly returns of all earnings for 1902 in comparison with 1901—concluded. *1901.*

		No. of Passengers.	Rs.	Mds.	Rs.	Rs.	Rs.	Rs.	No.	Rate. Rs. A. P.
78·76	13 days of July ..	20 350	10,058	67,747	6,177	24	16,259	206	6,143	2 1 4
78·76	Week ended 20th ,, ...	12,298	5,865	50,236	3,121	8	8,994	114	3,307	2 11 6
78·76	,, ,, 27th ,, ...	19,907	8,083	40,002	2,883	18	10,984	139	3,308	3 5 2
78·76	,, ,, 3rd Aug ...	32,988	13,656	51,096	3,315	14	16,985	214	3,386	4 15 9
78·76	Totals up to date ...	85,543	37,662	2,39,081	15,396	64	53,122	129	16,144	3 4 8

ASSAM-BENGAL RAILWAY.

Approximate Return of Traffic for the week ended 2nd August 1902 on 558 miles open for all descriptions of traffic, and an additional 31 miles for goods and parcels traffic only.

	Coaching Traffic.		Merchandise and Mineral Traffic.		Other earnings	Total earnings.	Traffic Train-miles run.		
	No. of passengers.	Coaching receipts.	Weight carried.	Receipts.			Coaching.	Merchandise.	Total.
		Rs. A. P.	Mds. s.	Rs. A. P.	Rs. A. P.	Rs. A. P.			
Total traffic for the week ...	27,083	16,054 0 0	1,79,196 0	17,265 0 0	1,350 0 0	34,669 0 0	6,316	8,265	14,581
Or per mile of railway	50·15	28·77	304·24	29·31	2·29	60·37	11·32	14·03	25·35
For previous 4 weeks of half-year	113,704	65,137 0 0	6,31,976 0	56,645 0 0	5,525 0 0	1,27,307 0 0	24,595	32,294	56,889
Total for 5 weeks ...	141,687	81,191 0 0	8,11,172 0	73 910 0 0	6,875 0 0	1,61,976 0 0	30,911	40,559	71,470
COMPARISON.									
Total for corresponding week of previous year	26,111	15,523 0 0	1,11,640 0	18,642 0 0	745 0 0	34,910 0 0	6,260	6,338	12,598
Per mile of railway corresponding week of previous year ...	46 79	27·82	193·15	32·25	1·29	61·36	11·22	10·97	22·19
Total to corresponding date of previous year	135,847	82,373 0 0	5,73,383 0	86,173 0 0	7,619 0 0	1,76,165 0 0	31,264	30,779	62,043

FINANCIAL YEAR.

Approximate Statement of Gross Receipts of the Assam-Bengal Railway.

Receipts for week ending 2nd Aug. 1902.			Receipts for the week ending 3rd Aug. 1901.			Total receipts from 1st April 1902 to 2nd Aug. 1902.			Total receipts from 1st April 1901 to 3rd Aug. 1901.			Total increase in 1902.	Total decrease in 1902.
Mean mileage worked	Receipts.	Per mile worked	Mean mileage worked	Receipts.	Per mile worked	Mean mileage worked.	Total receipts.	Per mile worked.	Mean mileage worked	Total receipts.	Per mile worked		
	Rs.	Rs.		Rs.	Rs.		Rs.			Rs.		Rs.	Rs.
569	34,669	60 37	573	34,910	61·36	580	6,49,485	...	573	6,96,962	...	.....	47,477

EASTERN BENGAL STATE RAILWAY.

(INCLUDING N. B., K.-D., DACCA AND ASSAM-BEHAR SECTIONS.)

Approximate Return of Traffic and Mileage for the week ended 2nd August 1902 on 854 miles open.

	COACHING TRAFFIC.		MERCHANDISE AND MINERAL TRAFFIC.		Other earnings (including ferry).	Total earnings.	TRAFFIC TRAIN-MILES RUN.		
	Number of passengers.	Coaching receipts.	Weight carried.	Receipts.			Coaching.	Merchandise.	Total.
		Rs. A. P.	Mds. s.	Rs. A. P.	Rs. A. P.	Rs. A. P.			
Total traffic for the week ...	204,650	94,730 0 0	7,51,180 0	1,55,230 0 0	8,120 0 0	2,58,080 0 0	37,042	38,002	76,034
Or per mile of railway ...	240	111 0 0	880 0	182 0 0	1 0 0*	294 0 0*	...	...	...
For previous 4 weeks of half-year	850,720	4,13,120 0 0	30,58,020 0	4,71,290 0 0	56,350 0 0	9,40,760 0 0	140,736	127,658	268,394
Total for 5 weeks ...	1,055,370	5,07,850 0 0	38,09,200 0	6,26,520 0 0	64,470 0 0	11,98,840 0 0	178,078	165,750	344,428
COMPARISON.									
Total for corresponding week of previous year	244,054	95,313 0 0	8,41,030 0	1,63,396 0 0	9,081 0 0	2,68,290 0 0	37,720	39,744	77,464
Per mile of railway corresponding week of previous year .	286	112 0 0	985 0	191 0 0	1 0 0	304 0 0	...	...	...
Total to corresponding date of previous year	1,109,241	4,79,511 0 0	46,33,020 0	6,18,104 0 0	78,445 0 0	11,76,060 0 0	179,570	165,986	345,556

* Excluding ferry earnings.

BRAHMAPUTRA-SULTANPUR RAILWAY.

Approximate Return of Traffic and Mileage for the week ended 2nd August 1902 on 59·19 miles open.

	COACHING TRAFFIC.		MERCHANDISE AND MINERAL TRAFFIC.		Other earnings (including ferry).	Total earnings.	TRAFFIC TRAIN-MILES RUN.		
	No. of passengers.	Coaching receipts.	Weight carried.	Receipts.			Coaching.	Merchandise.	Total.
		Rs. A. P.	Mds. s.	Rs. A. P.	Rs. A. P.	Rs. A. P.			
Total traffic for the week ...	6,930	2,190 0 0	34,300 0	3,090 0 0	50 0 0	5,330 0 0	1,148	1,156	2,304
Or per mile of railway	117	37 0 0	581 0	52 0 0	1 0 0	90 0 0	...	...	...
For previous 4 weeks of half-year	24,950	7,560 0 0	55,450 0	5,580 0 0	220 0 0	13,360 0 0	4,128	3,276	7,404
Total for 5 weeks ...	31,880	9,750 0 0	89,840 0	8,670 0 0	270 0 0	18,690 0 0	5,276	4,432	9,708
COMPARISON.									
Total for corresponding week of previous year	6,733	1,864 0 0	29,758 0	2,592 0 0	11 0 0	4,467 0 0	798	1,491	2,289
Per mile of railway corresponding week of previous year	114	32 0 0	501 0	44 0 0	..	76 0 0	...	...	...
Total to corresponding date of previous year	30,514	8,557 0 0	93,728 0	8,330 0 0	102 0 0	16,998 0 0	4,548	6,681	11,229

MYMENSINGH-JAGANNATHGANJ RAILWAY.

Approximate Return of Traffic and Mileage for the week ended 2nd August 1902 on 53·37 miles open.

	COACHING TRAFFIC.		MERCHANDISE AND MINERAL TRAFFIC.		Other earnings (including ferry).	Total earnings.	TRAFFIC TRAIN-MILES RUN.		
	Number of passengers.	Coaching receipts.	Weight carried.	Receipts.			Coaching.	Merchandise.	Total.
		Rs. A. P.	Mds. s.	Rs. A. P.	Rs. A. P.	Rs. A. P.			
Total traffic for the week ...	7,760	2,160 0 0	23,910 0	1,050 0 0	30 0 0	3,240 0 0	1,270	813	2,083
Or per mile of railway ...	144	40 0 0	448 0	20 0 0	1 0 0	61 0 0	...	...	...
For previous 4 weeks of half-year	29,290	8,190 0 0	29,830 0	1,680 0 0	80 0 0	9,920 0 0	4,532	3,246	7,778
Total for 5 weeks ...	36,990	10,350 0 0	53,740 0 0	2,700 0 0	110 0 0	13,160 0 0	5,802	4,059	9,861
COMPARISON.									
Total for corresponding week of previous year ...	7,000	2,042 0 0	19,050 0	454 0 0	36 0 0	2,532 0 0	1,163	1,254	2,417
Per mile of railway corresponding week of previous year ...	148	38 0 0	374 0	8 0 0	1 0 0	47 0 0	...	...	...
Total to corresponding date of previous year	36,720	9,809 0 0	34,209 0	1,618 0 0	113 0 0	11,540 0 0	5,733	4,415	10,148

DACCA STATE RAILWAY.

Approximate Return of Traffic and Mileage for the week ended 2nd August 1902 on 86 miles open.

	Coaching Traffic.		Merchandise and Mineral Traffic.		Other earnings.	Total earnings.	Traffic Train-miles run.		
	Number of passengers.	Coaching receipts.	Weight carried.	Receipts.			Coaching.	Merchandise.	Total.
		Rs A. P.	Mds. s	Rs A. P	Rs. A. P.	Rs A. P.			
Total traffic for the week ...	25,700	7,400 0 0	14,300 0	1,350 0 0	90 0 0	8,840 0 0	2,698	1,610	4,308
Or per mile of railway	299	86 0 0	166 0	16 0 0	1 0 0	103 0 0	...	...	.
For previous 4 weeks of half-year	104,720	28,780 0 0	69,990 0	6,050 0 0	1,010 0 0	35,840 0 0	11,108	5,964	17,072
Total for 5 weeks ..	130,420	36,180 0 0	84 290 0	7,400 0 0	1,100 0 0	44,680 0 0	13,806	7,574	21,380
Comparison.									
Total for corresponding week of previous year	25,711	7,272 0 0	15,901 0	1,801 0 0	191 0 0	9,264 0 0	2,876	1,704	4,580
Per mile of railway corresponding week of previous year ..	299	85 0 0	185 0	21 0 0	2 0 0	108 0 0	...	..	..
Total to corresponding date of previous year	125,120	34,960 0 0	1,14,504 0	9,878 0 0	4,035 0 0	49,373 0 0	14,154	9,309	23 463

COOCH BEHAR STATE RAILWAY.

Approximate Return of Traffic and Mileage for the week ended 2nd August 1902 on 33·78 miles open.

	Coaching Traffic.		Merchandise and Mineral Traffic.		Other earnings (including ferry).	Total earnings.	Traffic Train-miles run.		
	Number of passengers	Coaching receipts.	Weight carried.	Receipts.			Coaching.	Merchandise.	Total.
		Rs. A. P.	Mds s.	Rs. A. P.	Rs. A. P.	Rs. A. P.			
Total traffic for the week	2,740	880 0 0	6,240 0	740 0 0	10 0 0	1,610 0 0	273	2,117*	2,390*
Or per mile of railway ..	81	26 0 0	185 0	22 0 0		48 0 0	.....	.....	.....
For previous 4 weeks of half-year	10,210	3,600 0 0	27,270 0	3,350 0 0	60 0 0	7,010 0 0	1,164	7,318	8,482
Total for 5 weeks ...	12,950	4,480 0 0	33,510 0	4 090 0 0	70 0 0	8,620 0 0	1,437	9,435	10,872
Comparison.									
Total for corresponding week of previous year	2,120	815 0 0	11,871 0	731 0 0	162 0 0	1,708 0 0	215	714	929
Per mile of railway corresponding week of previous year ..	63	24 0 0	351 0	22 0 0	1 0 0	47 0 0	.....	... ..	.....
Total to corresponding date of previous year	10,137	3,632 0 0	31,155 0	2,972 0 0	712 0 0	7,336 0 0	1,062	2 027	3,089

* Ballast train-miles 1,900.

BENGAL AND NORTH-WESTERN RAILWAY.

Approximate Return of Traffic for the week ending 2nd August 1902 on 1,262 miles open.

	Coaching Traffic.		Merchandise and Mineral Traffic.		Other earnings (estimated), including steam-boat.	Total earnings.	Traffic Train-miles run.		
	No. of passengers.	Receipts.	Weight carried.	Receipts.			Coaching.	Merchandise.	Total.
		Rs.	Mds.	Rs	Rs	Rs			
Total traffic for the week on 1,203 miles open	171,910	69,690	5,88,490	(a) 65,580	17,730	1,53,000	41,840	(b) 30,785	72,125
Or per mile of railway	136 22	55 22	466 32	51 07	14 05	12 124	... ..	.....	.....
For previous 3½ weeks of half-year	731,210	2,87,440	22,37,760	2,46,360	61,480	5,95,280	153,396	114,800	268,256
Total for 4½ weeks	894,120	3,57,130	28,26,250	3,11,940	79,210	7,48,280	194,736	145,045	340,381
Comparison.									
Total for corresponding week of previous year on 1,251 miles open	187,702	68,309	5,14,926	60,178	15,094	1,43,581	33,238	(c) 31,507	64,735
Per mile of corresponding week of previous year	150 00	54 60	411 61	48 10	12·07	114·77	... ..	.....	.....
Total to corresponding date of previous year	903,898	3,41,427	31,74,940	3,57,233	86,817	7,85,477	164,024	148,882	312,906

(a) Increase under goods due mainly to mds 65,431 and Rs. 4,421 on account of railway stores and ballast trains.
(b) Includes 5,910 miles of ballast trains run on open line.
(c) ,, 6,926 ,, ,, ,,

SEGOWLIE-RAKSAUL BRANCH RAILWAY.

(WORKED BY THE B. & N.-W. RAILWAY.)

Approximate Return of Traffic for the week ending 2nd August 1902 on 18 miles open.

	COACHING TRAFFIC.		MERCHANDISE AND MINERAL TRAFFIC.		Other earnings (estimated).	Total earnings.	TRAFFIC TRAIN-MILES RUN.		
	Passengers carried.	Receipts.	Weight carried.	Receipts.			Coaching.	Merchandise.	Total.
	No.	Rs.	Mds.	Rs.	Rs.	Rs.			
Total traffic for the week on 18 miles open	1,230	167	6,671	160	6	342	419	85	504
Or per mile of railway	68·33	9·28	365·06	9·39	0·33	19·00	.....	.....	.....
For previous 3½ weeks of half-year	5,450	796	38,825	838	21	1,655	1,405	467	1,872
Total for 4½ weeks ...	6,680	963	45,396	1,007	27	1,997	1,824	552	2,376
COMPARISON.									
Total for corresponding week of previous year on 18 miles open	1,982	296	4,706	200	5	501	475	65	540
Per mile of railway corresponding week of previous year	110·11	16·45	261·44	11·11	0·29	27·85	.....	.....	.....
Total to corresponding date of previous year	10,001	1,563	38,225	1,205	57	2,825	2,067	417	2,484

BENGAL AND NORTH-WESTERN RAILWAY.

Approximate Return of Traffic for the week ending 9th August 1902 on 1,262 miles open.

	COACHING TRAFFIC.		MERCHANDISE AND MINERAL TRAFFIC.		Other earnings (estimated), including steam-boat.	Total earnings.	TRAFFIC TRAIN MILES RUN.		
	No. of passengers.	Receipts.	Weight carried.	Receipts.			Coaching.	Merchandise.	Total.
		Rs.	Mds.	Rs.	Rs.	Rs.			
Total traffic for the week on 1,262 miles open	181,880	68,190	5,13,720	54,840	12,070	(a)1,35,100	41,316	(b)31,480	72,796
Or per mile of railway	144·12	54·03	407·07	43·46	9·56	107·05	...	...	...
For previous 4½ weeks of half-year	894,120	3,57,130	28,26,250	3,11,940	79,210	7,48,280	194,736	145,645	3,40,381
Total for 5½ weeks ...	1,076,000	4,25,320	33,39,970	3,66,780	91,280	8,83,380	236,052	177,125	4,13,177
COMPARISON.									
Total for corresponding week of previous year on 1,251 miles open	177,317	62,001	4,63,383	53,057	14,620	1,29,678	35,260	(c)25,734	60,994
Per mile of corresponding week of previous year	141·74	49·56	370·41	42·41	11·69	103·66	...	...	...
Total to corresponding date of previous year	1,031,215	4,03,420	36,38,323	4,10,289	1,01,437	9,15,155	193,284	174,616	3,73,900

(a) There is a slight increase chiefly in passenger traffic.
(b) Includes 6,004 miles of ballast trains run on open line.
(c) ,, 6,720 ,, ,,

SEGOWLIE-RAKSAUL BRANCH RAILWAY.

(WORKED BY THE B. & N.-W. RAILWAY.)

Approximate Return of Traffic for the week ending 9th August 1902 on 18 miles open.

	COACHING TRAFFIC.		MERCHANDISE AND MINERAL TRAFFIC.		Other earnings (estimated).	Total earnings.	TRAFFIC TRAIN-MILES RUN.		
	Passengers carried.	Receipts.	Weight carried.	Receipts.			Coaching.	Merchandise.	Total.
	No.	Rs.	Mds.	Rs.	Rs.	Rs.			
Total traffic for the week on 18 miles open	1,931	229	6,136	169	6	403	419	85	504
Or per mile of railway	107·28	12·07	342·00	9·30	0·33	22·39	...	...	...
For previous 4½ weeks of half-year	6,680	963	45,396	1,007	27	1,997	1,824	552	2,376
Total for 5½ weeks ...	8,611	1,191	51,532	1,176	33	2,400	2,243	637	2,880
COMPARISON.									
Total for corresponding week of previous year on 18 miles open	2,587	350	7,349	128	15	493	436	68	504
Per mile of corresponding week of previous year ...	143·72	19·46	408·22	7·10	0·84	27·40	...	...	...
Total to corresponding date of previous year	12,583	1,913	45,573	1,333	72	3,318	2,503	485	2,988

EASTERN BENGAL STATE RAILWAY.

(INCLUDING N. B., K.-D., DACCA, AND ASSAM-BEHAR SECTIONS.)

Approximate Return of Traffic and Mileage for the week ended 9th August 1902 on 856† miles open.

	COACHING TRAFFIC.		MERCHANDISE AND MINERAL TRAFFIC.		Other earnings (including ferry).	Total earnings.	TRAFFIC TRAIN-MILES RUN.		
	No. of passengers.	Coaching receipts.	Weight carried.	Receipts.			Coaching.	Merchandise.	Total.
		Rs. A. P.	Mds. S.	Rs. A. P.	Rs. A. P.	Rs. A. P.			
Total traffic for the week ...	234,460	98,140 0 0	9,54,670 0	1,81,320 0 0	0,020 0 0	2,88,480 0 0	37,942	38,040	76,582
Or per mile of railway	274	115 0 0	1,093 0	212 0 0	1 0 0*	328 0 0*	...	...	...
For previous 5 weeks of half-year	1,055,370	5,07,830 0 0	38,09,200 0	6,26,520 0 0	64,470 0 0	11,98,840 0 0	178,678	165,750	344,428
Total for 6 weeks ...	1,289,770	6,05,990 0 0	47,43,870 0	8,07,840 0 0	73,490 0 0	14,87,320 0 0	216,620	203,790	421,010
COMPARISON.									
Total for corresponding week of previous year ...	247,234	96,590 0 0	8,82,607 0	1,75,731 0 0	10,750 0 0	2,83,061 0 0	36,859	44,120	80,979
Per mile of railway corresponding week of previous year ...	289	113 0 0	1,033 0	206 0 0	1 0 0	320 0 0	...	...	...
Total to corresponding date of previous year	1,356,475	5,76,101 0 0	52,46,527 0	7,93,825 0 0	80,195 0 0	14,59,121 0 0	216,429	210,115	426,544

* Excluding ferry earnings.
† Corrected up to date.

BRAHMAPUTRA-SULTANPUR RAILWAY.

Approximate Return of Traffic and Mileage for the week ended 9th August 1902 on 59·19 miles open.

	COACHING TRAFFIC.		MERCHANDISE AND MINERAL TRAFFIC.		Other earnings (including ferry).	Total earnings.	TRAFFIC TRAIN-MILES RUN.		
	No. of passengers.	Coaching receipts.	Weight carried.	Receipts.			Coaching.	Merchandise.	Total.
		Rs. A. P.	Mds. S.	Rs. A. P.	Rs. A. P.	Rs. A. P.			
Total traffi for the week ...	6,820	1,830 0 0	43,900 0	3,830 0 0	60 0 0	5,730 0 0	1,092	1,380	2,472
Or per mile of railway ...	114	31 0 0	725 0	65 0 0	1 0 0	97 0 0	.....	...	...
For previous 5 weeks of half-year	31,880	9,750 0 0	89,840 0	8,670 0 0	270 0 0	18,690 0 0	5,276	4,432	9,708
Total for 6 weeks ...	38,503	11,580 0 0	1,33,740 0	12,500 0 0	330 0 0	24,410 0 0	6,368	5,812	12,180
COMPARISON.									
Total for corresponding week of previous year	6,381	1,729 0 0	33,128 0	3,307 0 0	21 0 0	5,157 0 0	790	1,616	2,406
Per mile of railway corresponding week of previous year ...	108	29 0 0	545 0	56 0 0	1 0 0	86 0 0	.....	.....	...
Total to corresponding date of previous year	36,009	10,286 0 0	1,26,850 0	11,040 0 0	124 0 0	22,056 0 0	5,339	8,297	13,636

MYMENSINGH-JAGANNATHGANJ RAILWAY.

Approximate Return of Traffic and Mileage for the week ended 9th August 1902 on 53·37 miles open.

	COACHING TRAFFIC.		MERCHANDISE AND MINERAL TRAFFIC.		Other earnings (including ferry).	Total earnings.	TRAFFIC TRAIN-MILES RUN.		
	No. of passengers.	Coaching receipts.	Weight carried.	Receipts.			Coaching.	Merchandise.	Total.
		Rs. A. P.	Mds. S.	Rs. A. P.	Rs. A. P.	Rs. A. P.			
Total traffi for the week ...	7,860	2,0 0 0 0	29,900 0	1,050 0 0	20 0 0	3,080 0 0	1,153	944	2,097
Or per mile of railway ...	147	38 0 0	560 0	20 0 0	... ...	58 0 0	.....	... ...	... ...
For previous 5 weeks of half-year	36,999	10,350 0 0	53,740 0	2,700 0 0	110 0 0	13,160 0 0	5,972	4,059	9,861
Total for 6 weeks ...	44,859	12,360 0 0	83,640 0	3,750 0 0	130 0 0	16,240 0 0	6,955	5,003	11,958
COMPARISON.									
Total for corresponding week of previous year	3,112	2,157 0 0	15,826 0	679 0 0	37 0 0	2,873 0 0	884	840	1,524
Per mile of railway corresponding week of previous year	152	40 0 0	297 0	13 0 0	1 0 0	54 0 0	.....	...	
Total to corresponding date of previous year	44,892	11,568 0 0	80,035 0	2,297 0 0	150 0 0	14,413 0 0	6,617	5,095	11,712

DACCA STATE RAILWAY.

Approximate Return of Traffic and Mileage for the week ended 9th August 1902 on 86 miles open.

	Coaching Traffic.		Merchandise and Mineral Traffic.		Other earnings.	Total earnings.	Traffic Train-miles run.		
	No. of passengers.	Coaching receipts.	Weight carried.	Receipts.			Coaching.	Merchandise.	Total.
		Rs. A. P.	Mds. s.	Rs. A. P.	Rs. A. P.	Rs. A. P.			
Total traffic for the week ...	24,710	6,550 0 0	15,830 0	1,550 0 0	330 0 0	8,430 0 0	2,770	1,838	4,308
Or per mile of railway	287	76 0 0	184 0	18 0 0	4 0 0	98 0 0	...	...	...
For previous 5 weeks of half-year	130,420	36,180 0 0	84,290 0	7,400 0 0	1,100 0 0	44,680 0 0	13,906	7,574	21,380
Total for 6 weeks ...	155,130	42,730 0 0	1,00,120 0	8,950 0 0	1,430 0 0	53,110 0 0	16,676	9,112	25,688
Comparison.									
Total for corresponding week of previous year	23,530	7,163 0 0	26,509 0	2,031 0 0	64 0 0	9,258 0 0	3,265	2,246	5,111
Per mile of railway corresponding week of previous year ...	274	83 0 0	308 0	31 0 0	1 0 0	115 0 0	...	...	...
Total to corresponding date of previous year	148,650	42,123 0 0	1,41,013 0	13,509 0 0	4,590 0 0	59,231 0 0	17,019	11,555	28,574

COOCH BEHAR STATE RAILWAY.

Approximate Return of Traffic and Mileage for the week ended 9th August 1902 on 33·78 miles open.

	Coaching Traffic.		Merchandise and Mineral Traffic.		Other earnings (including ferry).	Total earnings.	Traffic Train-miles run.		
	No. of passengers.	Coaching receipts.	Weight carried.	Receipts.			Coaching.	Merchandise.	Total.
		Rs. A. P.	Mds. s.	Rs. A. P.	Rs. A. P.	Rs. A. P.			
Total traffic for the week ...	2,740	870 0 0	8,447 0	1,190 0 0	40 0 0	2,100 0 0	273	2,103*	2,376*
Or per mile of railway ...	81	26 0 0	250 0	36 0 0	1 0 0	62 0 0	...	...	...
For previous 5 weeks of half-year	12,950	4,460 0 0	33,510 0	4,090 0 0	70 0 0	8,620 0 0	1,437	9,435	10,872
Total for 6 weeks ...	15,690	5,330 0 0	41,960 0	5,280 0 0	110 0 0	10,720 0 0	1,710	11,538	13,248
Comparison.									
Total for corresponding week of previous year	1,957	742 0 0	5,154 0	623 0 0	115 0 0	1,480 0 0	222	811	1,033
Per mile of railway corresponding week of previous year ...	58	22 0 0	153 0	18 0 0	.....	40 0 0	...	...	...
Total to corresponding date of previous year	12,094	4,395 0 0	36,309 0	3,505 0 0	827 0 0	8,817 0 0	1,284	2,838	4,122

* Ballast train-miles, 1,900.

BENGAL CENTRAL RAILWAY COMPANY, LIMITED.

Approximate Return of Traffic and Mileage for the week ended 2nd August 1902 on 139 miles open.

	Coaching Traffic.		Merchandise and Mineral Traffic.		Other earnings	Total earnings.	Traffic Train-miles run.		
	Number of passengers.	Coaching receipts.	Weight carried.	Receipts.			Coaching.	Merchandise.	Total.
		Rs. A. P.	Mds. s.	Rs. A. P.	Rs. A. P.	Rs. A. P.			
Total traffic for the week ...	34,005	13,300 0 0	40,534 0	4,442 0 0	50 0 0	17,861 0 0	3,354	2,506	5,860
Or per mile of railway	262	103 0 0*	290 0	32 0 0	.....	135 0 0	.....	.....	.....
For previous 4 weeks of half-year	136,130	56,311 0 0	1,49,087 0	12,230 0 0	403 0 0	69,030 0 0	12,418	10,167	22,615
Total for 5 weeks ...	170,234	69,671 0 0	1,90,021 0	16,672 0 0	557 0 0	86,900 0 0	15,802	12,673	28,475
Comparison.									
Total for corresponding week of previous year	40,646	14,060 0 0	1,19,608 0	13,927 0 0	166 0 0	29,062 0 0	3,161	4,165	7,326
Per mile of railway corresponding week of previous year ...	313	115 0 0	860 0	100 0 0	1 0 0	216 0 0	.....	.....	.....
Total to corresponding date of previous year	178,813	65,034 0 0	3,27,476 0	31,041 0 0	30,499 0 0	1,22 574 0 0	15,830	14,284	30,130

* Coaching traffic calculated on 130 miles only.

DARJEELING-HIMALAYAN RAILWAY COMPANY, LIMITED.

		Rs	A.	P.	Rs.	A.	P.
Approximate earnings for the week ending 9th Aug. 1902 ...	Coaching ...	3,206	0	0			
	Goods ...	8,402	0	0	11,653	0	0
	Other earnings ...	45	0	0			
Audited earnings for the corresponding period of 1901 ...	Coaching ...	3,191	0	0			
	Goods ...	7,996	0	0	11,251	0	0
	Other earnings ...	64	0	0			
	Increase ...				402	0	0
Receipts per mile for the week ending 9th Aug 1902					228	7	10
Ditto for the corresponding period of 1901					220	9	9
	Increase ...				7	14	1
Receipts from 1st July to 9th Aug. 1902					83,421	0	0
Ditto for the corresponding period of 1901					81,938	0	0
	Increase ...				1,483	0	0

Printed at the Printing Office, and published by the Book Depôt, of the Bengal Secretariat, Writers' Buildings, in the City of Calcutta, on 20th August 1902.

REGISTERED No. C209.]

No 35 of 1902.

The Calcutta Gazette.

WEDNESDAY, AUGUST 27, 1902.

CONTENTS.

	Page
PART I.—Orders and Notifications by the Lieutenant-Governor of Bengal, the High Court, Government Treasury, &c.	1151—1160
PART IA.—Orders and Notifications by the Government of India	137
PART IB.—Orders by the Lieutenant-Governor of Bengal	163—164
PART II.—Advertisements	1045—1071
PART III.—Acts of the Bengal Council	Nil
PART IV.—Bills of the Bengal Council	Nil
PART IVA.—Proceedings of the Bengal Legislative Council	Nil
PART V.—Acts of the Governor-General's Council assented to by the Governor-General	Nil
PART VI.—Bills introduced into the Council of the Governor-General for making Laws and Regulations or published under Rule 23	Nil
APPENDIX.—Marine Notifications	327—334
SUPPLEMENT No. 35:—	
Resolution on the Report of the working of the Shipping Offices at Calcutta and the outports	1203
Report on the state of the Salt Market for the first quarter of 1902-1903	1205
Statistical Return of Crops, Circular and Eastern Canal, Railway Traffic Receipts, &c., &c	1208—1228

PART I

Orders and Notifications by the Lieutenant-Governor of Bengal, the High Court, Government Treasury, &c.

ORDERS BY THE LIEUT.-GOVERNOR OF BENGAL.

No. 4011A.

APPOINTMENTS AND TRANSFERS.

GENERAL.—*No. 3916A.—The 23rd August 1902.*—Babu Hari Mohan Chandra, Deputy Magistrate and Deputy Collector, on leave, is posted to the head-quarters station of the Jalpaiguri district.

Jalpaiguri.

No. 3932A.—The 25th August 1902.—The order of the 4th August 1902, posting Babu Sures Chandra Chatterji, Deputy Magistrate and Deputy Collector, to the head-quarters station of the Dacca district, is cancelled.

Dacca.

No. 3947A.—The 25th August 1902.—Babu Jogendra Nath Bandopadhya, Deputy Magistrate and Deputy Collector, Midnapore, is transferred to the head-quarters station of the Darbhanga district.

Midnapore.
Darbhanga.

No. 3949A.—The 25th August 1902.—Babu Jogendra Naraiyan Mitra, Deputy Magistrate and Deputy Collector, Darbhanga, is transferred to the head-quarters station of the Midnapore district.

Darbhanga.
Midnapore.

No. 3954A.—The 25th August 1902.—Mr. D. H. Kingsford, Joint-Magistrate and Deputy Collector, was employed at the head-quarters station of the 24-Parganas district from the 29th July to the 2nd August 1902, both days inclusive

24-Parganas.

No. 3961A.—The 25th August 1902.—Mr. E. A. Oakley, substantive *pro tempore* Deputy Magistrate and Deputy Collector, on leave, is posted to the head-quarters station of the Ranchi district.

Ranchi.

No. 3964A.—The 26th August 1902.—Mr. A. Garrett, substantive *pro tempore* Joint-Magistrate and Deputy Collector, is appointed to act, until further orders, in the first grade of Joint-Magistrates and Deputy Collectors, and is posted to the head-quarters station of the district of Muzaffarpur, on being relieved of his present appointment as Officiating Magistrate and Collector, Puri.

Puri.
Muzaffarpur.

No. 3966A.—The 26th August 1902.—Mr. W. N. Delevingne, Officiating Magistrate and Collector, Jessore, is appointed to act as Magistrate and Collector, Puri, during the absence, on deputation, of Mr. H. Luson, or until further orders.

Jessore.
Puri.

No. 3968A.—The 26th August 1902.—Mr. S. S. Skinner, Officiating Joint-Magistrate and Deputy Collector, Raniganj, Burdwan, is appointed to act temporarily as Magistrate and Collector of Jessore.

Burdwan.
Jessore.

No. 3970A.—The 26th August 1902.—Mr. G. E. Lambourn, Assistant Magistrate and Collector, Hazaribagh, is appointed to have charge of the Raniganj subdivision of the Burdwan district, during the absence, on deputation, of Mr. S. S. Skinner, or until further orders.

Hazaribagh.
Burdwan.

No. 3972A.—The 26th August 1902.—Mr. L. S. S. O'Malley, Assistant Magistrate and Collector, on leave, is appointed to act, until further orders, in the first grade of Joint-Magistrates and Deputy Collectors, and is posted to the head-quarters station of the Monghyr district.

Monghyr.

POLICE.—*No. 3938A.—The 25th August 1902.*—The services of Mr. A. T. Halliday, Assistant Superintendent of Police, on leave, are placed at the disposal of the Government of India in the Home Department.

JAILS.—*No. 3911A.—The 22nd August 1902.*—Mr. G. A. Davis, Superintendent of Jail Manufactures, is appointed to act, in addition to his own duties, as Superintendent of the Central Jail, Alipore, during the absence, on leave, of Mr. M. S. Emerson, or until further orders.

Calcutta.
24-Parganas.

EDUCATION.—*No 3987A.—The 26th August 1902.*—Mr Jogendra Nath Das Gupta, a Professor of the Provincial Educational Service in the Presidency College, is appointed to act, until further orders, as a Professor of the Indian Educational Service in that College, *vice* Mr. W. W Hornell, on leave.

Calcutta.

No. 3989A.—The 26th August 1902.—Babu Aditya Nath Mukherjea, Professor, Bethune College, is appointed to act, until further orders, as a Professor in the Presidency College, *vice* Mr. Jogendra Nath Das Gupta.

Calcutta.

PROMOTION.

GENERAL.—*No. 3924A.—The 23rd August 1902.*—Mr. S. L. Maddox, Officiating Magistrate and Collector, Darbhanga, is appointed to act in the first grade of Magistrates and Collectors, with effect from the afternoon of the 4th August 1902, during the absence, on deputation, of Mr. E. Geake, or until further orders.

Darbhanga.

LEAVE.

GENERAL.—*No. 3900A.—The 21st August 1902.*—Mr. G. Balthasar, I.C.S., has been granted by His Majesty's Secretary of State for India an extension of furlough to the 8th December 1902.

No. 3932A.—The 25th August 1902.—In modification of the order of the 7th May 1902, Babu Sures Chandra Chatterji, Deputy Magistrate and Deputy Collector, is allowed combined leave for nine months, viz., privilege leave for three months, under article 264A of the Civil Service Regulations, with effect from the 20th May 1902, and furlough for the remaining period under article 371 of the Regulations.

VOLUNTEERS.—*No. 3951A.—The 25th August 1902.*—Second-Lieutenant W. H. H. Vincent, Bihar Light Horse, has been granted, by the General Officer Commanding the Allahabad District, leave of absence for three months, with effect from the date on which he may avail himself of it.

POLICE.—*No. 3901A.—The 21st August 1902.*—The special leave for three months and twelve days, granted to Mr. C. E. Gouldsbury, District Superintendent of Police, under the order of the 24th April 1902, has been commuted by His Majesty's Secretary of State for India into furlough on medical certificate and extended by six months.

No. 3920A.—The 23rd August 1902.—Mr. H. C. L Bamber, District Superintendent of Police, Bhagalpur, is allowed leave for one month, under article 291 of the Civil Service Regulations, with effect from the afternoon of the 6th September 1902.

Bhagalpur.

JAILS.—*No. 3909A.—The 22nd August 1902.*—Mr. M. S. Emerson, Officiating Superintendent of the Central Jail, Alipore, is allowed leave for two months and eleven days, under article 291 of the Civil Service Regulations, with effect from the 26th August 1902, or any subsequent date on which he may avail himself of it.

24-Parganas.

EDUCATION.—*No. 3985A.—The 26th August 1902.*—Mr. W. W. Hornell, Temporary Professor, Presidency College, is allowed special leave from the 2nd July 1902 to the 5th October 1902, both days inclusive, under article 219, Note 2, of the Civil Service Regulations.

Calcutta.

ECCLESIASTICAL.—*No. 3998A.—The 26th August 1902* - The Revd. C G Stokoe, Junior Chaplain of St Paul's Cathedral and Chaplain of the Presidency General Hospital, is allowed leave for two months, under article 656 of the Civil Service Regulations, with effect from the 25th August 1902, or any subsequent date on which he may avail himself of it.

POWERS.

GENERAL.—*No. 3957A —The 25th August 1902.*—Babu Dakshinaranjan Ghose, Deputy Collector, employed on the work of acquiring lands required for the extension of the Howrah-Amta Light Railway from Jagatballabpur to Champadanga, *viâ* Prasadpur and Autpur, within the district of Hooghly, is vested with the powers of a Collector, under Act I of 1894, in that district.

Hooghly.

The following orders are republished from the *Assam Gazette* :—

No. 6303G.—The 12th August 1902 —In exercise of the power conferred by sub-section (1) of section 565 of the Code of Criminal Procedure (Act V of 1898), the Chief Commissioner is pleased to empower Mr. S G. Hart, I.C.S, Assistant Commissioner and Magistrate of the first class, to order, at the time of passing sentence of imprisonment on any person referred to in that sub-section, that the residence or change of residence of such person after release shall be notified, as provided by the rules made under sub section (3) of the said section.

No. 6408G.—The 14th August 1902.—With effect from the 17th July 1902, in consequence of the return from privilege leave of Mr. F. W. Strong, I.C.S., Officiating Assistant Commissioner, first grade—

Mr. J. McSwiney, I.C.S., Officiating Assistant Commissioner, first grade, to officiate as Assistant Commissioner, second grade.

Mr. H. L. Thomas, I.C.S., Officiating Assistant Commissioner, second grade, to revert to his substantive appointment of Assistant Commissioner, third grade.

No. 6423G.—The 14th August 1902.—The following is published :—

The undermentioned officer has been granted by His Majesty's Secretary of State for India permission to return to duty, as advised in list dated the 18th July 1902 :—

Name.	Service.	Appointment	Date on which permitted to return.
Mr. F. J. Monahan.	I. C. S.	Deputy Commissioner and Secretary to Chief Commissioner, Assam.	Within period of leave.

No. 3614J.—The 11th August 1902.—Under the provisions of section 7 (1) of the Civil Courts Act, XII of 1887, Babu Bunwari Lal Banerjee is appointed to be a Munsif in the district of Sylhet, to be ordinarily stationed at Habiganj.

No. 3615J.—The 11th August 1902.—Under the provisions of section 25 of Act XII of 1887 (The Civil Courts Act), the Chief Commissioner confers upon Babu Bunwari Lal Banerjee, Munsif of Habiganj, the jurisdiction of a Judge of a Court of Small Causes for the trial of suits cognizable by such a Court up to the value of Rs. 100, within the limits of the Habiganj Munsifi.

No. 6514G.—The 19th August 1902.—Privilege leave of absence for 15 days, under article 291 of the Civil Service Regulations, is granted to Mr. B. B. Newbould, I.C.S., District and Sessions Judge, Sylhet, and Sessions Judge, Cachar, with effect from the 28th August 1902, or the subsequent date on which he may avail himself of it.

No. 6515G.—The 19th August 1902 —Babu Durga Charan Sen, Subordinate Judge, Sylhet, is appointed to officiate temporarily as District and Sessions Judge, Sylhet, and Sessions Judge, Cachar, during the absence, on leave, of Mr Newbould, I.C.S.

No. 6567G.—The 22nd August 1902.—The following is published :—

The undermentioned officer has been granted by His Majesty's Secretary of State for India permission to return to duty, as advised in list dated the 25th July 1902 :—

Name.	Service.	Appointment.	Date on which permitted to return.
Mr. A. W. Davis.	I.C.S.	Deputy Commissioner, Assam.	Within period of leave.

No. 3275R.—The 21st August 1902.—Under the provisions of section 4 of Act VI of 1901 (The Assam Labour and Emigration Act, 1901), the Chief Commissioner appoints Mr. A. E. O'Sullivan, Assistant Superintendent of Police, in charge of the District Police, Nowgong, to be an Assistant Inspector of Labourers (within the district of Nowgong).

C. E. BUCKLAND,

Chief Secy. to the Govt. of Bengal.

REVENUE DEPARTMENT

NOTIFICATIONS.

No. 3331-O.—The 2nd August 1902.—Mr. G. O'B. Power, Assistant Factory Superintendent, Ghazipur, is granted privilege leave for two months, with effect from the 1st September 1902, or any subsequent date on which he may avail himself of it.

Ghazipur.
Etawah.

Mr. H. A. Jones, Assistant Opium Agent, Etawah, is appointed to act as Assistant Factory Superintendent, Ghazipur, during the absence, on leave, of Mr. G. O'B. Power.

No. 3300-O.—The 21st August 1902.—It is hereby declared that a competitive examination for one appointment in the Opium Department will be held in February 1903. At this examination only such European and Eurasian candidates as have been nominated by the Lieutenant-Governors of Bengal and the United Provinces of Agra and Oudh, each of whom is authorised to make as many nominations as he considers necessary or desirable, subject to ultimate approval by the Lieutenant-Governor of Bengal, will be permitted to present themselves.

It must be clearly understood by competitors that the candidate who may be declared successful will not be entitled to obtain permanent appointment in the grade of Assistant Opium Agents, until a permanent vacancy occurs in that grade, nor until he has complied with the conditions of rule 12, but it is the intention of Government to appoint him at once to duty in the Department as an Officiating Assistant Opium Agent on a salary of Rs. 140 a month. If within two years of his appointment he succeeds in passing the Departmental Examinations, and is well reported on, and there is a vacancy in the Department at the time, he will be appointed on a salary of Rs. 200 per mensem. His pay thereafter will rise with length of service according to the following scale and the rules governing service in the Department:—

Years of service.	Pay.
	Rs.
1, 2, 3	200
4, 5, 6	250
7, 8, 9, 10	300
11, 12, 13, 14	400
15, 16, 17, 18, 19	500
20, 21, 22, 23, 24	600

After 24 years' service all increases of pay will depend upon the occurrence of vacancies in the four highest grades of Sub-Deputy Opium Agents, viz., 4th grade on Rs 700, 3rd grade on Rs. 800, 2nd grade on Rs 900, and 1st grade on Rs. 1,000. Should a successful candidate not be provided with a permanent appointment within two years of his appointment, he will draw a personal pay of Rs. 170 a month, provided he has fully passed his departmental examinations and is well reported on.

2. A certificate of health and physical fitness, signed by a covenanted medical officer, in the form given in the margin, will be required from each candidate, who should also furnish a copy of his baptismal certificate, in the absence of which sufficient evidence as to age should be forwarded with the application for admission to the examination. No one whose age will be below 19 years on the 1st February 1903, or above 22 years on the 1st March, will be permitted to appear.

I do hereby certify that I have examined Mr. , a candidate for employment in the Opium Department, and that he has no disease, affection, or bodily infirmity, and is in my opinion possessed of a robust constitution, well fitted for the performance of the duties appertaining to such an appointment. His age is according to his own statement years and by appearance years.

Signature.
Description.

The *190* .

3. A certificate that the candidate is able to ride and is of active habits, signed by a District Magistrate or by a Presidency Magistrate or the Commissioner of Police, in the case of applicants residing in Presidency towns, should also be submitted

4. Applications for nominations by the Lieutenant-Governor of Bengal, accompanied by the necessary certificates, must be sent to the Under-Secretary to the Government of Bengal, in the Revenue Department, on or before the 1st January 1903. Such applicants as are granted nominations will receive an intimation to that effect, and be required to pay a fee of Rs. 20 before they can appear at the examination. The fee is payable to the Under-Secretary aforesaid.

5. The examination will be held in Calcutta: the date and place of the examination and the order in which the different subjects will be taken up will be notified hereafter to such candidates as are allowed to present themselves at the competition.

6. The examination will be by written questions and answers and *viva voce*.

The subjects of examination and the number of marks to be allotted will be as follows:—

I.—Preliminary—

	Marks.
(1) Dictation	100
(2) English composition (*i.e.*, essay or *précis*-writing) ...	100
(3) Arithmetic (the whole)	100

II.—Obligatory—

	Marks.
(4) Algebra (up to and including Quadratic Equations) and Plane Trigonometry (including solution of triangles and mensuration)	100
(5) Euclid, Books I, II, III, IV and VI	100
*(6) English History	100
*(7) Indian History	100
(8) English Literature	100
(9) Hindustani—	
Urdu—Translation of easy passages from English into Urdu; reading at sight from a book, such as the Bagh-o-Bahar; conversation. *Hindi*—Translation of some piece into Hindi character; reading at sight from a printed book, such as the Baital Pachisi.	150

III.—Optional—

(10) Latin (200) and French (150)	350
or	
(11) Botany (150) and (Chemistry 150)	300

No text-books are prescribed for the different subjects, except for the subjects included in No. (11)—Botany and Chemistry. The text-books for these subjects are—

(*a*) Oliver's First Book of Indian Botany.

(*b*) Inorganic Chemistry, Theoretical and Practical, by W. Jago.

7. No books of any kind will be allowed at the time of examination.

8. Candidates who fail to obtain half the marks in each and all of the three subjects of the preliminary examination shall not be allowed to proceed further with the examination in the remaining subjects. The examination in the obligatory and optional subjects will not be held until the papers of the preliminary examination have been examined and marked, for which an interval of a day or two will ordinarily be allowed to the Examiners, and a list of the candidates successful in the preliminary examination will be published forthwith at the place of the examination.

9. In the obligatory subjects each candidate must obtain at least one-third of the marks allotted to each paper to be considered to have passed in that paper and half of the marks in the aggregate. Should no candidate obtain the minimum of qualifying marks according to this standard, the appointment will be made by His Honour the Lieutenant-Governor of Bengal in such way as may be deemed proper.

10. The candidates will only be allowed to take up either, but not both, of the groups of the optional subjects, and the marks obtained will count towards the aggregate total.

The candidates must state in their applications which of the groups they will take up.

11. The candidates will be placed in order of precedence according to the aggregate number of marks obtained by them and the appointment will be made accordingly.

12. Candidates appointed to the Opium Department after examination, will be considered as probationers for the first two years of their service. The confirmation of a candidate in the Department will depend on his passing the departmental examinations and on the periodical reports submitted by the Opium Agents, showing the industry and intelligence with which he discharges his duties and his aptitude for service in the Department as displayed during the period of probation. He will be liable to be removed if he fails to pass all examinations within this period, or if his conduct is unsatisfactory and he is reported to be unfit for confirmation.

No. 3358L R.—The 25th August 1902.—In exercise of the powers conferred by section 109A of the Bengal Tenancy Act, 1885, as amended by Bengal Act III of 1898, the Lieutenant-Governor of Bengal is pleased to appoint the District Judge of Nadia to be a Special Judge for the purpose of hearing appeals under sections 105 to 108 (both inclusive) of that Act, from the decisions of the Settlement Officer in the proceedings ordered under Chapter X of the said Act under Notification No. 748T.R., dated 26th May 1902, in respect of eight villages belonging to Babu Nafar Chandra Pal Chowdhry, in the district of Nadia.

Nadia.

W. C. MACPHERSON,
Offg. Secy. to the Govt. of Bengal.

* Questions on these subjects may also include questions relating to the geography of these countries.

SURVEY OF INDIA DEPARTMENT.

NOTIFICATION No. $\frac{3}{E9}$

BENGAL SURVEYS.

MR. N. BEDFORD, Extra-Assistant Superintendent, fifth grade, Survey of India, is allowed privilege leave for three months, under article 296 of the Civil Service Regulations, with effect from the forenoon of 28th July 1902.

OFFICE OF THE SUPDT., PROVINCIAL SURVEYS, BENGAL, DINAPUR, *the 15th August 1902.*

R. CRICHTON, CAPT., S.C., *Superintendent of Provincial Surveys, Bengal.*

FINANCIAL DEPARTMENT.

NOTIFICATIONS.

No. 4212S.R.—The 25th August 1902.—Babu Ambica Prosad Sen, Deputy Collector, is appointed Deputy Collector of Income-tax in the district of Rajshahi, *vice* Babu Jogneswar Biswas, and under section 40 of Act II of 1886 is vested with the powers of a Collector under the Act

Rajshahi.

No. 4241S R.—The 25th August 1902.—Babu Akshay Kumar Sen, Deputy Collector, is appointed Deputy Collector of Income-tax in the district of Dinajpur, *vice* Babu Atul Chandra Dutt, and under section 40 of Act II of 1886 is vested with the powers of a Collector under the Act.

Dinajpur.

E. W. COLLIN,
Offg. Secy. to the Govt. of Bengal.

MEDICAL DEPARTMENT.

No. 2389Medl.—The 19th August 1902.—Lieutenant-Colonel J. B. Gibbons, I.M.S., Officiating Civil Surgeon of Howrah, is appointed, with effect from the 18th August 1902, to act as a Civil Surgeon of the first class, during the absence, on leave, of Lieutenant-Colonel D. G. Crawford, I.M.S., or until further orders.

Howrah.

No. 2418Medl.—The 21st August 1902.—Babu Hari Krishna Das, a Licentiate of the Calcutta University, is admitted into the service of Government as an Assistant Surgeon of the third grade, with effect from the 17th June 1902.

Calcutta.

No. 2419Medl.—The 21st August 1902.—The services of third grade Assistant Surgeon Hari Krishna Das, of the Bengal Establishment, are placed permanently at the disposal of the Hon'ble the Chief Commissioner of Assam.

Assam.

No. 2424Medl.—The 22nd August 1902.—Military Assistant Surgeon A. A. Allison, Officiating Civil Medical Officer of Manbhum, is confirmed in that appointment, with effect from the 6th February 1902, *vice* Dr. P. A. Rigby.

Manbhum.

No. 2460Medl.—The 26th August 1902.—Captain C. H. Bedford, I.M.S., Chemical Examiner and Professor of Chemistry, Medical College, Calcutta, is allowed privilege leave for one month and four days, under article 291 of the Civil Service Regulations, with effect from the 1st September 1902, or any subsequent date on which he may avail himself of it.

Calcutta.

No. 2462Medl.—The 26th August 1902.—Assistant Surgeon Rai Chuni Lal Bose Bahadur, a Chemical Examiner to Government and Assistant Professor of Chemistry, Medical College, Calcutta, is appointed to be in charge, in addition to his own duties, of the current duties of the office of Chemical Examiner to Government, and Professor of Chemistry, Medical College, Calcutta, during the absence, on leave, of Captain C. H. Bedford, I.M.S., or until further orders.

Calcutta.

E. W. COLLIN,
Offg. Secy. to the Govt. of Bengal.

JUDICIAL DEPARTMENT.

No. 4012A.

APPOINTMENTS AND TRANSFERS.

No. 3974A.—The 26th August 1902.—Babu Gopal Chandra Banerjee, Munsif of Serampore, in the district of Hooghly, is appointed to act, until further orders, as Subordinate Judge of Monghyr, in the district of Bhagalpur, *vice* Babu Tara Prasanna Banerjee, about to retire, and is temporarily vested with the powers of a Judge of a Court of Small Causes for the trial of suits cognizable by such a Court up to the value of Rs. 500, within the local limits of the Monghyr Munsifi.

Hooghly. Monghyr.

No. 3976A.—The 26th August 1902.—Babu Durga Prosad Ghose, B.L., is appointed to act as a Munsif in the district of Hooghly, to be ordinarily stationed at Serampore, during the absence, on deputation, of Babu Gopal Chandra Banerjee, or until further orders.

Hooghly.

No. 3978A.—The 26th August 1902.—Babu Sasi Bhusan Chaudhuri, Additional Subordinate Judge, Saran, on deputation to Motihari, is appointed to be Subordinate Judge of Saran.

Saran.

No. 3981A.—The 26th August 1902.—Babu Chunder Kumar Chatterjee, Munsif of Raiganj, in the district of Dinajpur, on leave, is appointed to be a Munsif in the district of Tippera, to be ordinarily stationed at Brahmanbaria.

Dinajpur. Tippera.

No. 3983A.—The 26th August 1902.—Maulvi Abdur Rahim, Munsif of Brahmanbaria, in the district of Tippera, is appointed to be a Munsif in the district of Dinajpur, to be ordinarily stationed at Raiganj, and is vested with the powers of a Judge of a Court of Small Causes for the trial of suits cognizable by such a Court up to the value of Rs. 100, within the local limits of the Raiganj Munsifi.

Tippera. Dinajpur.

No. 3830J.—The 23rd August 1902.—The undermentioned gentlemen are appointed to be Honorary Magistrates of the Independent Bench at Sitamarhi, in the district of Muzaffarpur :—

Muzaffarpur.

Babu Rajnandan Singh | Babu Mahanidh Misra. | Babu Har Narain Lal.

No. 3835J.—The 23rd August 1902.—Maulvi Muhammad Saeed is appointed to be an Honorary Magistrate of the Independent Bench at Roserha, in the district of Darbhanga.

Darbhanga.

No. 3872J.—The 23rd August 1902.—Babu Radha Madhab Bose is appointed to be an Honorary Magistrate of the Independent Bench at Rampur Hât, in the district of Birbhum.

Birbhum.

No. 3937J.—The 25th August 1902.—The undermentioned gentlemen are re-appointed to be Honorary Magistrates of the Sadar Independent Bench, in the district of Cuttack :—

Cuttack.

Babu Jagadish Chandra Roy Choudhry. | Maulvi Rafiuddin Mahammad.

No. 3940J.—The 25th August 1902.—Babu Shyam Sunder Bosu is appointed to be an Honorary Magistrate of the Sadar Independent Bench, in the district of Cuttack.

Cuttack.

LEAVE.

No. 3248A.—The 31st July 1902.—Babu Jugal Kisor De, Munsif of Jhenida, in the district of Jessore, was on leave, without allowances, under article 372 of the Civil Service Regulations, from the 21st April to the 26th April 1902, both days inclusive.

Jessore.

No. 3994A.—The 19th August 1902.—Babu Mohim Chandra Sircar, Munsif of Dacca, is allowed leave for two days, under article 306 (*b*) of the Civil Service Regulations, in extension of that granted to him under the order of the 28th July 1902.

Dacca.

The 19th August 1902.—Babu Apurva Chandra Ghose, Munsif of Dinajpur, is allowed leave for one month, under article 306 (*b*) of the Civil Service Regulations, with effect from the 28th August 1902, or from the date on which he may be relieved.

Dinajpur.

No. 3995A.—The 20th August 1902.—Babu Jogendro Nath Mookerjee (No II), Munsif of Barisal, in the district of Backergunge, is allowed furlough for five months, under articles 264 and 371 of the Civil Service Regulations, with effect from the 7th July 1902, in supersession of the leave granted to him under the order of the 4th July 1902.

Backergunge.

RESIGNATIONS.

No. 3858J.—The 23rd August 1902.—The Lieutenant-Governor accepts the resignation tendered by Syed Futteh Ali Mirza of his appointment as an Honorary Magistrate of the Lalbagh Independent Bench, in the district of Murshidabad.

Murshidabad.

POWERS.

No. 3916A.—The 23rd August 1902.—Babu Hari Mohan Chandra, Deputy Magistrate, who has, under the order of this date, been posted to the head-quarters station of the Jalpaiguri district, is vested with the powers of a Magistrate of the first class.

Jalpaiguri.

No. 3928A.—The 25th August 1902.—Babu Jogendro Nath Chuckerbutty, Deputy Magistrate, Dinajpur, is vested with powers under section 110 of the Code of Criminal Procedure.

Dinajpur.

No. 3930A.—The 25th August 1902.—Mr. A. P. Muddiman, Officiating Joint-Magistrate, Aliporc, 24-Parganas, is vested with powers under sections 110, 133, and 186 of the Code of Criminal Procedure.

24-Parganas

No. 3952A.—The 25th August 1902.—Babu Manmatha Nath Mukerjea, Deputy Magistrate, Howrah, is vested with the powers of a Magistrate of the first class.

Howrah

No. 3832J.—The 23rd August 1902.—The undermentioned gentlemen, who have been appointed to be Honorary Magistrates of the Independent Bench at Sitamarhi, in the district of Muzaffarpur, are vested with the powers of a Magistrate of the third class:—

Muzaffarpur.

Babu Rajnandan Singh. | Babu Mahanidh Misra. | Babu Har Narain Lal.

No. 3836J.—The 23rd August 1902.—Maulvi Muhammad Saeed, who has been appointed to be an Honorary Magistrate of the Independent Bench at Roserha, in the district of Darbhanga, is vested with the powers of a Magistrate of the third class.

Darbhanga.

No. 3873J.—The 23rd August 1902.—Babu Radha Madhab Bose, who has been appointed to be an Honorary Magistrate of the Independent Bench at Rampur Hât, in the district of Birbhum, is vested with the powers of a Magistrate of the first class, and is also authorised to sit singly for the trial of such cases as may be made over to him by the Subdivisional Officer of Rampur Hât.

Birbhum.

No. 3938J.—The 25th August 1902.—The undermentioned gentlemen, who have been re-appointed to be Honorary Magistrates of the Sadar Independent Bench, in the district of Cuttack, are vested with the powers of a Magistrate of the third class:—

Cuttack.

Babu Jagadish Chandra Roy Choudhry. | Maulvi Rafiuddin Mahammad.

No 3939J.—The 25th August 1902.—Under the authority vested in him by section 357, sub-section 2 of the Code of Criminal Procedure, Act V of 1898, the Lieutenant-Governor empowers Babu Jagadish Chandra Roy Choudhry, who has been re-appointed to be an Honorary Magistrate of the Sadar Independent Bench, in the district of Cuttack, to take down evidence in criminal cases in the English language.

Cuttack.

No. 3941J.—The 25th August 1902.—Babu Shyam Sunder Bosu, who has been appointed to be an Honorary Magistrate of the Sadar Independent Bench, in the district of Cuttack, is vested with the powers of a Magistrate of the third class.

Cuttack.

No. 3942J.—The 25th August 1902.—Under the authority vested in him by section 357, sub-section 2 of the Code of Criminal Procedure, Act V of 1898, the Lieutenant-Governor empowers Babu Shyam Sunder Bosu, who has been appointed to be an Honorary Magistrate of the Sadar Independent Bench, in the district of Cuttack, to take down evidence in criminal cases in the English language.

Cuttack.

C. E. BUCKLAND,

Chief Secy. to the Govt. of Bengal.

DECLARATION—No. 3742J.

The 22nd August 1902.—Whereas it appears to the Lieutenant-Governor of Bengal that land is required to be taken by Government at the public expense for a public purpose, viz., for the construction of a new barrack for the Reserve Force, in the village of Dahiawan, pargana Manjhi, zilla Saran, it is hereby declared that for the above purpose a piece of land measuring, more or less, 5 cottahs 12 dhoors of standard measurement, bounded on the north by the fencing of Police lines, on the west by the fencing of Police lines, on the south by public road, and on the east by tank, is required within the aforesaid village of Dahiawan.

Saran.

This declaration is made, under the provisions of section 6 of Act I of 1894, to all whom it may concern.

A plan of the land may be inspected in the office of the Land Acquisition Deputy Collector, Saran.

C. E. BUCKLAND,

Chief Secy. to the Govt. of Bengal.

DECLARATION—No. 3763J.

The 22nd August 1902.—Whereas it appears to the Lieutenant-Governor of Bengal that land is required to be taken by Government at the public expense for a public purpose, viz., for the extension of the police station quarters at Brahmanbaria in the village of Brahmanbaria, pargana Satarkhandal, zilla Tippera, it is hereby declared that for the above purpose a piece of land measuring, more or less, 1 bigha, 14 cottahs and 7 chitaks of standard measurement, bounded on the north by drain, on the east by drain, on the south by Municipal road, and on the west by thana compound, is required within the aforesaid village of Brahmanbaria.

Tippera.

This declaration is made, under the provisions of section 6 of Act I of 1894, to all whom it may concern.

A plan of the land may be inspected in the office of the Collector of Tippera.

C. E. BUCKLAND,
Chief Secy. to the Govt. of Bengal.

PROCLAMATION—No. 3851J.

The 21st August 1902.—Under section 15 of Act V of 1861 (as amended by Act VIII of 1895), the Lieutenant-Governor declares that the conduct of the inhabitants of the village of Galua, in outpost Rajapur, police-station Jhalakati, in the district of Backergunge, has rendered it expedient to increase the number of the police force by the appointment of an additional force to be quartered therein at the cost of the inhabitants of the aforesaid village. This proclamation shall remain in force for a period of twelve months from this date.

Backergunge.

C. E. BUCKLAND,
Chief Secy. to the Govt. of Bengal.

POLICE DEPARTMENT.

No. 3924J.—The 25th August 1902.—Babu Nanda Kumar Bose, Inspector of Police, 24-Parganas, is promoted from the second to the first grade of Inspectors, with effect from the 16th July 1902, *vice* Babu Nabin Chandra Ghose, retired.

24-Parganas.

No. 3926J.—The 25th August 1902.—Maulvi Azizul Haq, Inspector of Police, Saran, is promoted from the third to the second grade of Inspectors, with effect from the 16th July 1902, *vice* Babu Nanda Kumar Bose, promoted.

Saran.

No. 3928J.—The 25th August 1902.—Babu Janki Nath Das, Inspector of Police, Birbhum, is promoted from the third to the second grade of Inspectors, with effect from the 1st July 1902, *vice* Babu Jadu Nath Bose, retired.

Birbhum.

No. 3930J.—The 25th August 1902.—Babu Saroda Kinker Mukerji, Inspector of Police, Midnapore, is promoted from the third to the second grade of Inspectors, with effect from the 5th August 1902, *vice* Maulvi Golam Imam Khan, retired.

Midnapore.

C. E. BUCKLAND,
Chief Secy. to the Govt. of Bengal.

IRRIGATION DEPARTMENT.

The 26th August 1902.

No. 176.—Declaration.—Whereas it appears to the Lieutenant-Governor of Bengal that land is required to be taken by Government at the public expense for a public purpose, viz., for a bungalow at Malpurwa ghat, in the village of Malpurwa, pargana Majhowa, zilla Champaran, it is hereby declared that for the above purpose a piece of land measuring, more or less, 4 bighas 11 cottahs and 6 chitaks of standard measurement, bounded on the north by the garden of proprietor, on the south by the public road, on the east by the river Harha, and on the west by the parti land, is required within the aforesaid village of Mulpurwa.

This declaration is made, under the provisions of section 6 of Act I of 1894, to all whom it may concern.

A plan of the land may be inspected in the office of the Executive Engineer, Champaran Division, Motihari.

D. B. HORN,
Secy. to the Govt. of Bengal.

RAILWAY DEPARTMENT.

The 25th August 1902.

No. 172R.—Declaration.—Whereas it appears to the Lieutenant-Governor of Bengal that land is required to be taken by Government at the public expense for a public purpose, viz., for a trenching ground at the Mokameh Ghat railway station, villages of Aunta Chandarbhan and Aunta Raghuram, pargana Ghaiaspur, zilla Patna, it is hereby declared that for the above purpose a piece of land measuring, more or less, 1 bigha 10 cottahs and 8·88 chitaks of standard measurement, bounded on the north and south by the fields of Dariao Singh, Kanai Singh, Halkhari Singh, Pariyag Singh, Dhondhu Singh, on the east by the fields of Halkhari Singh and by the Bengal North-Western Railway fencing, and on the west by the fields of Dariao Singh, is required within the aforesaid villages of Aunta Chandarbhan and Aunta Raghuram.

This declaration is made, under the provisions of section 6 of Act I of 1894, to all whom it may concern.

A plan of the land may be inspected in the office of the Collector of Patna.

No. 173R.—Declaration.—Whereas it appears to the Lieutenant-Governor of Bengal that land is required to be taken by Government at the public expense for a public purpose, viz., for diversion of road to level crossing between Alipur and Gourangdi on Alipur Branch, East Indian Railway, in the village of Dabor, pargana Pandra, zilla Burdwan, it is hereby declared that for the above purpose two pieces of land measuring, more or less, 1 bigha 18 cottahs and 13·11 chitaks of standard measurement (corresponding to 2 roods 22·66 poles), bounded as follows:—

Plot No. 1.—On the north by the brick-field of Dinobandhu Mohata, on the south by the paddy lands of Ananta Mohata, Suchand Mohata and Dinobandhu Mohata, on the east by the village road to level crossing between Alipur and Gourangdi, and on the west by the paddy lands of Ananta Mohata,

Plot No. 2.—On the north and south by the paddy and suna lands of Dinobandhu Mohata and Ananta Mohata, on the east by the village road to level crossing between Alipur and Gourangdi, and on the west by the paddy lands of Dinobandhu Mohata,

are required within the aforesaid village of Dabor.

Mines of coal, iron-stone, slate or other minerals lying under the land, except only such parts of the mines and minerals as it may be necessary to dig or carry away, or use in the construction of the work for the purpose of which the land is being acquired, are not needed.

This declaration is made, under the provisions of section 6 of Act I of 1894, and section 3, clause (1), Act XVIII of of 1885, to all whom it may concern.

A plan of the land may be inspected in the office of the District Engineer, East Indian Railway, Asansol.

No. 174R.—Declaration.—Whereas it appears to the Lieutenant-Governor of Bengal that land is required to be taken by Government at the public expense for a public purpose, viz., for the experimental Sutargachi station, mile 35¼, Eastern section, Eastern Bengal State Railway, in the village of Sutargachi, pargana Pajnour, zillá Nadia, it is hereby declared that for the above purpose a piece of land measuring, more or less, 13 cottahs 14 chitaks 10 square feet of standard measurement, bounded on the north, south and west by Purna Chandra Manda's land, and on the east by Eastern Bengal State Railway's land, is required within the aforesaid village of Sutargachi.

This declaration is made, under the provisions of section 6 of Act I of 1894, to all whom it may concern.

A plan of the land may be inspected in the office of the Executive Engineer, Calcutta District, Eastern Bengal State Railway.

No. 175R.—Declaration—Whereas it appears to the Lieutenant-Governor of Bengal that land is required to be taken by Government at the public expense for a public purpose, viz., for the extension of Katihar yard of Katihar Division of the Eastern Bengal State Railway, in the villages of Myrchai and Durgapur, parganas Katihar and Haveli, zilla Purnea, it is hereby declared that for the above purpose two plots of land measuring, more or less, 2 roods 0·88 pole of standard measurement, bounded as follows:—

Plot A.—On the west by the District Board road, on the south by the Eastern Bengal State Railway land under acquisition, on the north by land of Babu Dinoo Nath Misser, and on the east by Eastern Bengal State Railway land,

Plot B.—On the west by the District Board road, on the north and south by land of Babu Dinoo Nath Misser, and on the east by Eastern Bengal State Railway land,

are required within the aforesaid villages of Myrchai and Durgapur.

This declaration is made, under the provisions of section 6 of Act I of 1894, to all whom it may concern.

A plan of the land may be inspected in the office of the Executive Engineer, Katihar District, Eastern Bengal State Railway.

No. 176R.—Declaration.—Whereas it appears to the Lieutenant-Governor of Bengal that land is required to be taken by Government at the public expense for a public purpose, viz., for water-supply at Jamtara station by the East Indian Railway Company, in the village of Dhandra, taluk Pabia, subdivision Jamtara, zilla Sonthal Parganas, it is hereby declared that for the above purpose a piece of land measuring, more or less, 33 bighas 6 cottahs 1$\frac{5}{8}$ chitaks of standard measurement (corresponding to 11·01 acres), bounded on the north by paddy and bari land of Man Mohan Sarkar, public road from Jamtara to Dumka, paddy land of Upendra Kabiraj, Ahladi Rauth, Upendra Kabiraj and Gopal Dobey, bari land of Man Mohan Sarkar and paddy land of Man Gobind Sarkar, Isvar Chandra Sarkar and Gopal Dobey, on the south by Railway "B" class land, on the east by paddy land of Gopal Dobey, Jugal Sah, Bhikhakar Ghosh, Man Gobind Sarkar and Jugal Sah, and on the west by tank of the East Indian Railway Company, is required within the aforesaid village of Dhandra.

This declaration is made, under the provisions of section 6 of Act I of 1894, to all whom it may concern.

A plan of the land may be inspected in the office of the Deputy Commissioner, Sonthal Parganas.

W. A. INGLIS,
Offg. Secy. to the Govt. of Bengal.

MARINE DEPARTMENT.

The 26th August 1902.

No. 113Marine.—Declaration.—Whereas it appears to the Lieutenant-Governor of Bengal that land is required to be taken up by the Government at the public expense for a public purpose, namely, for extending the Petroleum Depôt at Budge-Budge, in the village of Dihi Nundunpore, pargana Baha, zilla 24-Parganas, it is hereby declared that for the above purpose a piece of land measuring, more or less, 2 bighas 9 cottahs of standard measurement, bounded on the north by Budge-Budge Feeder Road, on the east by a bustee and the garden land of Babu K. P. Mundol of Bowally, on the south by the moat belonging to the Port Commissioners, Babu K. P. Mundol's land and the Port Commissioners' land, and on the west by the Port Commissioners' land.

A plan of the land is kept for inspection in the Office of the Commissioners of the Port of Calcutta, where it can be seen by any person who may be interested in it.

This declaration is made, under the provisions of section 6 of Act I 1894, to all whom it may concern.

D. B. HORN,
Offg. Secy. to the Govt. of Bengal.

SUBORDINATE CIVIL SERVICE.

No. 4013A.

No. 3934A.—The 25th August 1902.—Maulvi Abdul Aziz, Sub-Deputy Collector, is allowed leave for one month, under article 291 of the Civil Service Regulations, in extension of the leave granted to him under the order of the 29th July 1902.

No. 3991A.—The 26th August 1902.—Babu Hemanto Kumar Moitra, Sub-Deputy Collector, is posted to the head-quarters station of the Hazaribagh district, and is vested with the powers of a Magistrate of the second class, on being relieved of his settlement duties in Darbhanga.

Darbhanga.
Hazaribagh.

C. E. BUCKLAND,
Chief Secy. to the Govt. of Bengal.

SUBORDINATE EDUCATIONAL SERVICE.

No. 3936A.—The 25th August 1902.—The following promotions are sanctioned in the Subordinate Educational Service, with effect from the 1st August 1902:—

Promoted to class I.

Babu Phani Bhushan Bose, *vice* Babu Abhay Charan Pal, retired.

Promoted to class II.

Babu Nil Mani Pal, *vice* Babu Phani Bhushan Bose.

W. C. MACPHERSON,
Offg. Secy. to the Govt. of Bengal.

CIVIL MEDICAL DEPARTMENT, BENGAL.

No 8910, dated the 23rd August 1902.—In continuation of this Office Notification No. 185D., dated the 21st April last, the following list of fourth-year students who have passed the final examination for Hospital Assistants from the Dacca Medical School, and are qualified in medico-legal work, is published for general information:—

1. Jalodhar Nath. | 2. Gagan Chandra Pal.

No. 8913, dated the 23rd August 1902.—Assistant Surgeon Satya Saran Chakravati, Teacher of Pathology and Physiology in the Campbell Medical School, Calcutta, is allowed privilege leave for three months, under article 291 of the Civil Service Regulations, with effect from the 7th September 1902, or any subsequent date on which he may avail himself of it.

R. D. MURRAY, M.D., LIEUT.-COL., I.M.S.,
for *Inspector-General of Civil Hospitals, Bengal.*

TREASURY NOTICES.

BABU NAGENDRA NATH MITTER, Deputy Magistrate and Deputy Collector, has been placed in charge of the Dacca Treasury from the forenoon of the 19th August 1902, *vice* Babu Harendra Kumar Ghosh, transfered.

GUNGA N. ROY, *Persl. Asst.*, for *Commr.*

DACCA COMMR.'S OFFICE, *the 20th August 1902.*

ERRATUM.

For "Babu Jotindra Nath Das" in the Treasury Notice published at page 1016, Part I of the *Calcutta Gazette* of the 16th July last *read* "Babu Jotindra Nath Gupta."

SAKHAWAT HOSSEIN, for *Commissioner.*

COMMR.'S OFFICE, BHAGALPUR, *the 25th August 1902.*

HIGH COURT NOTICE.

HIGH COURT—ORIGINAL SIDE.

NOTIFICATION.

The 19th August 1902.

THE Hon'ble the Chief Justice of the High Court of Judicature at Fort William in Bengal has appointed Ernest Wilberforce Shain, Esquire, of Premier Buildings, 229 Collins Street, Melbourne, Solicitor, a Commissioner within all parts of the State of Victoria, to take affidavits or affirmations or declarations in all suits, matters and proceedings in the Calcutta High Court, and also the acknowledgments of married women in respect of property in India.

By Order,
W. R. FINK,
Registrar.

EDUCATION DEPARTMENT, BENGAL.

CALCUTTA UNIVERSITY.

NOTICE.

MAULAVI SYED SHAMSUL HUDA, M.A., B.L., Tagore Law Professor for 1901-1902, will hold an examination on the subject of his lectures, the Law of Crimes in British India, at the Senate House, College Square, on Saturday, the 30th August, at 11 A.M.

Candidates who have attended 75 per cent. of the lectures delivered by the Tagore Law Professor are admissible to the Examination.

SENATE HOUSE,
The 21st August 1902.

K. C. BANURJI,
Offg. Registrar.

Office Memorandum of the Inspector of Schools, Chota Nagpur Division.

UNIVERSITY ENTRANCE EXAMINATION, 1903.

TEST-EXAMINATION OF PRIVATE STUDENTS.

1. A student who does not appear from any school, or who has been transferred after the 31st August, without the consent of the Inspector, to the school from which he appears, will be treated as a private student. The term "private student" includes *School Masters*.

2. All private students are required to appear at the test-examination of a zilla school. No private student will be admitted to the test examination, unless accompanied, for the purpose of identification, by some person known to the Head Master of the institution at which he appears.

3. The first day of the test-examination in all zilla schools in the Chota Nagpur Division will be the 15th December 1902.

4. Each private student will have to pay a fee of Rs. 2 for permission to appear at the test-examination to the head of the institution at which he appears. The balance of such fees, after payment of expenses (stationery, &c.), will go as remuneration to the Examiners.

5. Candidates for the test-examination should apply to this office not later than the 11th November 1902. They should forward the certificates granted to them under the transfer rules by the Head Master of the school in which they last read. In the case of a candidate who had failed at a previous Entrance Examination and did not join a school afterwards, the Registrar's receipt, in original, will be accepted in lieu of the transfer certificate.

6. A student who had failed to pass the annual examination for promotion to the first class at the end of session 1901-1902 and then left the school will not, under any circumstances, be allowed to appear at the Entrance Examination of 1903.

7. Each candidate should submit with his application a statement showing—

(1) Age.
(2) Residence.
(3) Father's name.
(4) Second language, besides English.
(5) Whether he appeared at any previous Entrance Examination.

8. *Bonâ fide* teachers employed in any of the recognised schools in the Chota Nagpur Division may be admitted to the test-examination on payment of the prescribed fee, provided they can produce certificates of service and character from their employers, or from the Deputy Inspectors of the districts concerned.

9. The forms of application for permission to appear at the Entrance Examination will be signed by the Head Master of the zilla school at which the candidates have undergone the test, and will be forwarded by him to the Inspector for countersignature.

10. The applications and fees for admission to the Entrance Examination must be forwarded to the Registrar of the Calcutta University by the private candidates themselves, so as to reach his office on or before the 22nd January 1903.

11. The Entrance Examination in 1903 will be held on the 2nd March 1903 and following days.

F.A. AND B.A. EXAMINATION, 1903.

1. Deputy Inspectors of Schools, Sub-Inspectors of Schools, and *bonâ fide* teachers of recognised English schools in the Chota Nagpur Division of two years' standing, *i.e.*, who have served as such for full two academical sessions, or for six months in the case of those who were admitted to a former examination of the same class, will be admitted to the above examinations. These latter must have served for six months prior to the submission of their applications to the Inspector for countersignature. School Masters should produce certificates of character and length of service (with dates) from the Managers of the schools in which they are employed. Their applications must reach this office not later than the 3rd January 1903.

2. Candidates for the B.A. Examination must forward with the applications their F.A. certificates, and those for the F.A. Examination their Entrance certificates.

3. Candidates should read carefully the form of the certificate which this office will have to sign, and supply all information and documents required, without which the Inspector will decline to sign it.

4. The F.A. and B.A. Examinations in 1903 will be held on the 16th March 1903 and following days.

5 Applications and fees for admission to the above examinations must be forwarded to the Registrar, Calcutta University, by the candidates themselves so as to reach his office on or before the 2nd February 1903.

M. GHOSE,
Inspector of Schools, Chota Nagpur Division.

PURULIA, *the 24th July 1902.*

OFFICE MEMO.

RULES FOR APPEARING AT THE F.A. AND B.A. EXAMINATIONS FOR CANDIDATES FROM THE RAJSHAHI DIVISION WHO ARE NOT STUDENTS OF ANY AFFILIATED INSTITUTION.

DEPUTY INSPECTORS of Schools, Sub-Inspectors of Schools, and *bonâ fide* masters of English schools, who have served as such for the full period of two academical years, or of six months after the examination of the same class last held by the University, in the case of those only who were admitted to a former examination of that class, will be admitted to the abovementioned examinations The applications of school-masters should be accompanied by certificate of length of service from the Secretaries or Managers of the schools in which they are employed, and should reach this office not later than the 6th January 1903. The application of a school-master for permission to appear at the F.A. or B.A. examination should be signed by him in the *presence* of the Secretary or a Member of the Managing Committee of the school in which he is employed. The application should be forwarded to this office for countersignature, together with the Registrar's certificate, to prove, if this be the case, that the candidate has appeared at the examination in a previous year, and the certificate in proof of his having passed the Entrance or F.A. examination, as the case may be, and it will be sent back to him (the candidate), who will have to send it, together with the examination fee, to the Registrar of the University *direct*. School-masters are not required to pay any fee for getting their application for permission to appear at either of the abovementioned examinations countersigned by this office.

2. Candidates should read carefully the form of the certificate which this office is required to sign, and should be careful to supply all information and documents required, including the Registrar's receipt in the case of those school-masters who have been admitted to a former examination of the same class, without which the Inspector must decline to sign the certificate.

3. By *bonâ fide* masters of schools are to be understood masters who hold regularly paid appointments in English schools, teaching at least the M.E. course.

JALPAIGURI,
The 4th August 1902.

N. L. HALLWARD,
Offg. Inspector of Schools, Rajshahi Division.

Rajshahi Divisional Inspector's Office Memo.

UNIVERSITY ENTRANCE EXAMINATION.

PRIVATE STUDENTS.

1. *Private students* are those who do not appear from any school or who have been transferred from one school to another after the 31st August without the consent of the Inspector. The term 'private student' includes *school-masters*.

2. Private students must appear at the test-examination of one of the following institutions:—

Those from the—	At the test-examination of—	Date of test-examination.
1	2	3
1. Rajshahi district...	Rajshahi Collegiate School (with the Principal's permission).	On the dates fixed by the Principal of the Rajshahi College.
2. Pabna ,, ...	Pabna Zilla School ...	15th December 1902.
3. Bogra ,, ..	Bogra ditto ...	
4. Rangpur ,, ...	Rangpur ditto ...	
5. Dinajpur ,, ...	Dinajpur ditto ...	
6. Jalpaiguri ,, ...	Jalpaiguri ditto ...	
7. Darjeeling ,, ...	Darjeeling High School ...	

The examinations will begin as stated above, and each private student will pay a fee of Rs. 2 to the head of the institution at which he appears for examination. The balance after payment of expenses (stationery, etc.) will go as remuneration to the examiners.

3. Applications for permission to appear must be sent so as to reach *this office* not later than the 24th November with the following information, etc.—

From Private Candidates proper.

(*a*) The name of the school in which the candidate last studied.
(*b*) The transfer certificate (in original) granted to the candidate from the same; or
(*c*) In the case of a candidate who previously appeared at the Entrance examination, the Registrar's receipt (in original) for the fee paid.
(*d*) Age of the candidate.

From School-masters.

(*e*) A certificate from the Secretary or Proprietor of the school in which the candidate is serving to the effect that he has been a *bonâ fide paid* teacher of the school in which he teaches, and has been so ever since the 1st June 1902. In case of a school-master who has served *in more than one school*, he must produce certificates from the several schools in proof of his having been a *bonâ fide paid* teacher all along since the 1st June 1902.

Failing to produce the above certificate or certificates, a school-master will be subject to the rules applicable to *bonâ fide* private candidates, as given above.

4. If this office is satisfied that all is in order, the Inspector will countersign and return the application, and this then will be the candidate's passport for admission *to the test-examination.*

5. The Head Master of an institution (one of those named above) should direct private students to appear before him not later than the 2nd January with their applications for admission to the Entrance examination, and in the case of those candidates who have satisfied the test, he will cause them to sign their application forms in his presence, and will grant the necessary certificates, and then forward the applications to this office for countre-signature, after which they will be sent by the Inspector *direct* to the candidates.

6. Expedition is necessary in carrying out all these instructions, and candidates should be *most careful* to give their names and addresses written legibly and distinctly, so that no mistake may be likely to occur.

7. *Under no circumstances should the entrance fee be sent to this office.*

8. Private students will understand that the test-examination of any schools other than those named above will not be accepted by this office.

9. Addresses of private students should be supplied to this office.

JALPAIGURI,
The 4th August 1902.

N. L. HALLWARD,
Offg. Inspector of Schools, Rajshahi Division.

NOTICE.

Entrance Examination.

A TEST examination of private students and school-masters for admission to the ensuing Entrance Examination will be held at the office of the Inspector of Schools, Presidency Division, 4 Dalhousie Square, Calcutta, on Monday the 15th, and Tuesday the 16th December 1902. Such candidates only as reside in any of the districts of the Presidency Division, including Calcutta, will be admitted to the examination.

2. Candidates who do not appear from any school, *i.e.*, who have not attended any school since the 1st of September next preceding the examination, will be treated as private students. They will be required to furnish satisfactory proof that they have not read in any school from that date. They must also produce certificates of conduct and progress in studies from the authorities of the last school where they read, or, in the case of those who have not been in any school for more than a year, from some other reliable authorities. The transfer certificates granted to them by the authorities of the schools in which they studied last, or the Registrar's receipt for the fee paid in the case of those candidates who previously appeared at the Entrance Examination, must be submitted in original along with the application for permission to appear at the test examination.

3. *Bonâ fide* teachers employed in any of the schools in the Presidency Division may be admitted to the examination if they can produce certificates of service and character from their employers, or from the Deputy Inspector of the district concerned.

4. Each candidate should submit to this Office, not later than the 28th November 1902 his application for admission to the test examination, stating the following particulars:—

(1) Age; (2) residence; (3) father's name; (4) second language besides English; and (5) whether he appeared at any previous Entrance Examination.

5. The admission-fee for the examination is Rs. 4 for each candidate, and is to be remitted with the application within the prescribed date, after which a fine of Rs. 2 is to be imposed for each week's delay.

6. No private student will be admitted to the test examination unless accompanied, for the purpose of identification, by some person known to this Office.

7. Candidates who are sent up by this Office must appear at the Calcutta Examination Centre.

8. Those who reside at a distance from Calcutta may present themselves at the test examination held by the head-master of the nearest zilla or Government high school within the Presidency Division, on condition that they appear at the centre selected by the candidates from that institution. The head-master of such school is hereby authorised to sign the applications of these students, which must afterwards be countersigned by the Inspector. The fees and fines paid by such students, as per paragraph 5 above, should be utilized in meeting the cost of the examination.

9. The Entrance Examination in 1903 will be held on the 2nd March 1903 and the following days.

10. Applications and fees for admission to the examination must reach the office of the Registrar on or before the 22nd January 1903.

F.A. and B.A. Examinations.

Deputy Inspectors, Sub-Inspectors, and *bonâ fide* teachers of English schools in the Presidency Division who have served as such for full two academical years, or for six months in the case of those who were admitted to a former examination of the same class, will be admitted to the above examinations on production of certificates of character and length of service (with dates) from their employers. Their applications must reach this Office on or before the 12th January 1903.

2. Candidates for the B.A. Examination must send their F.A. Certificates, and candidates for the F.A. Examination, their Entrance Certificates.

3. Candidates should carefully read the printed form of application and supply all the informations required by the University, including the Registrar's receipt in the case of those school-masters who were admitted to a previous examination of the same class.

4. The F.A. and B.A. Examinations in 1903 will be held on the 16th March 1903 and the following days.

5. Applications and fees for admission to the above examinations must reach the office of the Registrar on or before the 2nd February 1903.

4, DALHOUSIE SQUARE, CALCUTTA: } P. MUKERJI,
The 6th August 1902. } *Offg. Inspector of Schools, Presidency Division.*

NOTIFICATIONS OF THE BOARD OF REVENUE.

No. 2229B.

NOTICE is hereby given that the Tenth Sale of Opium, the Provision of 1900-1901, will be held at the Government Opium Sale-room, No. 2 Bankshall Street, on Monday, the 29th September 1902, at 11 A.M., and will comprise 4,000 chests, viz:—

	Chests.
Opium manufactured at the Patna Factory, consisting of	2,000
Ditto ditto at the Ghazipur Factory, consisting of ...	2,000
Total ...	4,000

2nd.—The general conditions of the sale now advertised will be the same as usual. They may be ascertained by reference to the Notification issued on the 19th November 1901, and published in the *Government* and *Exchange Gazettes*, or on personal application at the Office of the Board of Revenue.

3rd.—The latest dates for deposit and clearance will be the 4th and 14th October 1902, respectively, that is to say, no Bank of Bengal Receipts, Government Promissory Notes, or other public securities that may be tendered for deposit in redemption of Promissory Notes given by purchasers in the sale-room will be received after 1-30 P.M. of Saturday, the 4th October 1902, and no Bank of Bengal Receipts in full payment of lots will be accepted after 3-30 P.M. of Tuesday, the 14th October 1902.

4th.—In addition to the quantity above advertised for sale, the following quantities, more or less, of the opium manufactured at the Patna and Ghazipur Factories will be brought to sale down to December next, on or about the dates specified below. The Board of

Revenue, however, reserve to themselves the right of altering these dates, should circumstances render it expedient to do so:—

Dates.	Manufactured at the Patna Factory; about chests.	Manufactured at the Ghazipur Factory; about chests.	Total; about chests.
On or about Monday, 3rd November 1902 ...	2,000	2,000	4,000
On or about Monday, 1st December „ ...	2,000	2,000	4,000
Total ...	4,000	4,000	8,000

By order of the Board of Revenue, L. P.,

H. WHEELER, *Secretary.*

BOARD OF REVENUE, L. P., CALCUTTA, *the 25th August 1902.*

No. 1994B.

NOTICE is hereby given that the Ninth Sale of Opium, the Provision of 1900-1901, will be held at the Government Opium Sale-room, No. 2 Bankshall Street, on Monday, the 1st September 1902, at 11 A.M., and will comprise 4,000 chests, viz.—

	Chests.
Opium manufactured at the Patna Factory, consisting of ...	2,000
Opium manufactured at the Ghazipur Factory, consisting of ...	2,000
Total ...	4,000

2nd.—The general conditions of the sale now advertised will be the same as usual. They may be ascertained by reference to the Notification issued on the 19th November 1901, and published in the *Government* and *Exchange Gazettes*, or on personal application at the office of the Board of Revenue.

3rd.—The latest dates for deposit and clearance will be the 6th and 16th September 1902, respectively, that is to say, no Bank of Bengal Receipts, Government Promissory Notes or other Public Securities that may be tendered for deposit in redemption of Promissory Notes given by purchasers in the sale-room will be received after 1-30 P.M. of Saturday, the 6th September 1902, and no Bank of Bengal Receipts in full payment of lots will be accepted after 3-30 P.M. of Tuesday, the 16th September 1902.

4th.—In addition to the quantity above advertised for sale, the following quantities, more or less, of the Opium manufactured at the Patna and Ghazipur Factories will be brought to sale down to December next on or about the dates specified below. The Board of Revenue, however, reserve to themselves the right of altering these dates, should circumstances render it expedient to do so:—

Dates.	Manufactured at the Patna Factory; about chests.	Manufactured at the Ghazipur Factory; about chests.	Total; about chests.
On or about Monday, 29th September 1902 ...	2,000	2,000	4,000
On or about Monday, 3rd November „ ...	2,000	2,000	4,000
On or about Monday, 1st December „ ...	2,000	2,000	4,000
Total ...	6,000	6,000	12,000

By order of the Board of Revenue, L. P.,

H. WHEELER, *Secretary.*

BOARD OF REVENUE, L. P., CALCUTTA, *the 29th July 1902.*

Statement showing the Quantity of Salt (Private Property) in Bonded Warehouses and Afloat on the River Hooghly on the 15th day of August 1902, and Transactions during the half-month from the 1st to the 15th August 1902.

Description of Salt.	In Bonded Warehouses in Calcutta.				Quantity afloat.	Grand Total.	Transactions during half-month from the 1st to the 15th August 1902, inclusive.			
	In private golas.	In Sulkea Government golas.	In Kidderpore Dock Government golas.	Total.			Quantity on which duty has been paid.	Manifested quantity arrived in the Port of Calcutta.	Deliveries from shipboard for consumption and for inland bonded warehouses.	Deliveries from bonded warehouses for consumption and for inland bonded warehouses.
1	2	3	4	5	6	7	8	9	10	11
		Mds.	Mds.	Mds.	Mds.	Mds.	Mds.	Mds.	Mds.	Mds.
United Kingdom—										
Liverpool and other Panga salt.	.....	6,39,406	8,03,470	14,42,876	27,846	14,70,722	1,30,233	1,40,661	44,252	1,99,031
Other European countries—										
Hamburg salt	.....	92,331	.....	92,331	.....	92,331	26,855	.....	.....	25,797
Aden and Red Sea—										
Aden salt	.....	2,44,576	15,486	2,60,062	.....	2,60,062	91,412	.....	.....	38,736
Salif salt	.....	2,68,727	.....	2,68,727	72,952	3,41,679	37,165	1,61,972	13,000	20,945
Salif rock salt	.....	8,165	.....	8,165	.....	8,165	2,850	.....	.....	2,450
Rawayah salt	.....	60,503	72,910	1,33,413	60,415	1,93,828	15,150	1,83,780	46,100	19,610
Muscat and Persian Gulf—										
Muscat, Lingah and Hanjam salt.	.....	1,35,051	.....	1,35,051	.....	1,35,051	.....	.....	.....	.....
Ditto ditto Rock salt.	.....	6,917	.....	6,917	.....	6,917	400	.....	.....	.....
British India—										
Bombay salt	.....	1,78,293	.....	1,78,293	.....	1,78,293	17,321*	.....	.....	26,764
Madras salt	.....	.....	.....	.....	.....	.....	.....	.....	.....	.....
Coconada salt	.....	.....	.....	.....	.....	.....	.....	.....	.....	.....
Vizagapatam salt	.....	.....	.....	.....	.....	.....	.....	.....	.....	.....
Other places—										
Madagascar salt	.....	.....	.....	.....	.....	.....	.....	.....	.....	.....
Port Said	.....	1,06,030	.....	1,06,030	.....	1,06,030	1,120	.....	.....	450
Total ...	.....	17,39,999	8,91,866	26,31,865	1,61,213	27,93,078	3,31,506	4,86,383	1,03,352	3,33,777

* This quantity includes 17,180 maunds Bombay Karkach salt on which duty was paid at Bombay.

By order of the Board of Revenue, L. P.,

L. F. MORSHEAD, *Offg. Collector of Customs.*

CALCUTTA CUSTOM HOUSE, *the 25th August 1902.*

ELECTION OF MUNICIPAL COMMISSIONERS.

NOTIFICATION.

IT is hereby notified for general information that at the bye-election held on Monday, the 4th August 1902, Maulvi Mohamad Ibrahim was duly elected a Commissioner of the Motihari Municipality, in the district of Champaran, *vice* Babu Kanti Bhushan Banerji, deceased.

E. F. GROWSE, *Offg. Addl. Commissioner.*

PATNA COMMR.'S OFFICE, BANKIPORE, *the 15th August 1902.*

NOTIFICATION.

IT is hereby notified for general information, under Rule 48 of the Election Rules, that on the date fixed by Government Notification No 1032T.M., dated the 20th June 1902, Babu Krishna Charan Guha was duly elected, under section 19 of the Local Self-Government Act, to be a member of the Madaripur Local Board for thana Palong, *vice* Babu Bidhu Mohan Mukerji, resigned.

GUNGA N. ROY, *Pers. Asst.*, for *Commissioner.*

DACCA COMMR.'S OFFICE, *the 22nd August 1902.*

NOTIFICATION.

IT is hereby notified for general information that at the bye-election held on Monday, the 4th August 1902, Babu Ambica Prasad was duly elected a Commissioner in Ward No. 4 of the Chapra Municipality, in the district of Saran, *vice* Maulvi Syed Nagar Husain, resigned, under section 27 of the Act.

E. F. GROWSE, *Offg. Addl. Commissioner.*

PATNA COMMR.'S OFFICE, BANKIPORE, *the 23rd August 1902.*

NOTIFICATION.

IT is hereby notified for general information that at a bye-election held on Saturday, the 16th August 1902, in Ward No. 2 of the Rajpur Municipality, in the district of the 24-Parganas, Babu Hira Lal Ghosh was duly elected to be a Commissioner for that Ward in the place of Babu Kishori Lal Ghosh, resigned.

M. FINUCANE, *Commissioner.*

COMMR.'S OFFICE, PRESY. DIVN., CALCUTTA, *the 25th August 1902.*

NOTIFICATION.

IT is hereby notified for general information, under Rule 21 (*b*) of the Dispensary Manual, that the undermentioned gentlemen have been appointed members of the Managing Committee for the Dainhat Dispensary, in the district of Burdwan :—

1. The Civil Surgeon of Burdwan, President, *ex-officio.*
2. The Subdivisional Officer of Katwa, Vice-President, *ex-officio.*
3. Babu Khattra Nath Adhikary (Vice-Chairman, Dainhat Municipality).
4. ,, Bistoo Das Chandra.
5. ,, Chandra Mohan Mukerji.
6. ,, Rajendra Chandra Mukerji.

R. CARSTAIRS, *Commissioner.*

COMMR.'S OFFICE, BURDWAN DIVN., CHINSURA, *the 20th August 1902.*

NOTIFICATION.

IT is hereby notified for general information that Mr. E. B. Clairsmith has been appointed, under Rule 21 (*b*) of the Rules for the management of the Charitable Hospitals and Dispensaries in Bengal, to be a member of the Committee for the management of the Purulia Dispensary, in the district of Manbhum, in place of Mr. A. T. Ricketts, on leave.

KRISHNAKALI MUKHARJI, *Persl. Asst.*, for *Offg. Commr.*

RANCHI, *the 20th August 1902.*

NOTIFICATION.

IT is hereby notified for general information that under Rule 21 (*b*) of the Dispensary Manual Babu Syama Charan Mitra has been appointed a member of the Managing Committee for the Woodburn Hospital and Charitable Dispensary at Khulna, in the district of Khulna, *vice* the Revd. R. H. Tregillus, resigned.

CHANDIDAS GHOSE, for *Commissioner on tour.*

COMMR.'S OFFICE, PRESY. DIVN., CALCUTTA, *the 22nd August 1902.*

The Calcutta Gazette.

WEDNESDAY, AUGUST 27, 1902.

PART IA.

Orders and Notifications by the Government of India, &c.

[*Reprinted from the "Gazette of India."*]

The following order, issued by the Government of India in the Military Department, is republished for general information.

C. E. BUCKLAND,
Chief Secy. to the Govt. of Bengal.

Simla, the 22nd August 1902.

VOLUNTEER CORPS.

APPOINTMENTS AND PROMOTIONS.

No. 777.—3rd (Cadet) Battalion, Calcutta Volunteer Rifles—

Second-Lieutenant Hugh Walkem to be Lieutenant, with effect from the 5th August 1902, *vice* Hooley, transferred to the East Indian Railway Volunteer Rifles.

Albert Neville Greene, Gentleman, to be Second-Lieutenant, with effect from the 1st August 1902, *vice* Clark, promoted.

Roger Austin Stoddart, Gentleman, to be Second-Lieutenant, with effect from the 1st August 1902, *vice* Marklew, promoted.

E. G. BARROW, *Major-General,*
Secy. to the Govt. of India.

The Calcutta Gazette.

WEDNESDAY, AUGUST 27, 1902.

PART IB.

ORDERS BY THE LIEUT.-GOVERNOR OF BENGAL.

MUNICIPAL AND LOCAL.

NOTIFICATIONS.

No. 2376L.S.-G.—The 20th August 1902.—It is hereby notified that, under section 19 of the Bengal Local Self-Government Act, III of 1885, the Lieutenant-Governor is pleased to appoint Babu Krishna Chandra Ghose to be a member of the District Board of Hazaribagh, *vice* Rai Jadu Nath Mukerji Bahadur, deceased.

Hazaribagh.

No. 2406L.S.-G.—The 21st August 1902.—It is hereby notified that, under section 24 of the Bengal Local Self-Government Act, III of 1885, the Lieutenant-Governor is pleased to re-appoint the Magistrate of Monghyr to be the Chairman of the Monghyr District Board.

Monghyr.

No. 2408L.S.-G.—The 21st August 1902.—It is hereby notified that, under section 24 of the Bengal Local Self-Government Act, III of 1885, the Lieutenant-Governor is pleased to re-appoint the Magistrate of Bhagalpur to be the Chairman of the Bhagalpur District Board.

Bhagalpur.

No. 2410L.S.-G.—The 21st August 1902.—It is hereby notified that, under section 24 of the Bengal Local Self-Government Act, III of 1885, the Lieutenant-Governor is pleased to re-appoint the Magistrate of Purnea to be the Chairman of the Purnea District Board.

Purnea.

No. 2412L.S.-G.—The 21st August 1902.—It is hereby notified that, under section 24 of the Bengal Local Self-Government Act, III of 1885, the Lieutenant-Governor is pleased to re-appoint the Magistrate of Malda to be the Chairman of the Malda District Board.

Malda.

No. 2456L.S.-G.—The 25th August 1902.—It is hereby notified that the members of the Madhipura Local Board, in the district of Bhagalpur, having at a meeting, under section 25 of the Bengal Local Self-Government Act, III of 1885, requested the Lieutenant-Governor to appoint a Chairman, the Lieutenant-Governor is pleased, under sections 25 and 29 of the Act, to appoint Babu Kanti Bhusan Sen to be the Chairman of that Local Board, *vice* Babu Satyendra Nath Das, resigned.

Bhagalpur.

Notification A.

NOTICE is hereby given, under sections 6 and 13, Act XI of 1859, that the undermentioned estates and shares of estates in the district of Dinajpur will be put up for sale at the office of the Collector of that district on the 24th September 1902 at 12-30 for arrears of revenue and other demands which by law are realisable as arrears of land revenue.

When in columns 5, 7 and 9 of the appended statement it is stated that only a share is to be sold, it is to be understood that a separate account is kept for that share.

Tauzi No.	Name of mahal and pargana.	Sadar jama of whole estate.	Whether the whole estate is to be sold.	If only a share is to be sold, specification of such share or shares.	Names of proprietors of property to be sold.	If only a share is to be sold, the sadar jama of such share.	If the whole estate is to be sold, the arrears due from it.	If only a share is to be sold, the arrears due from it.
1	2	3	4	5	6	7	8	9
143	Durgapur, pargana Debikote.	Rs. A. P. 6,924 15 7	No ...	Residue share 12 annas ... All other shares than that specified will be excluded from the sale.	Dinobundhu Nandi Chaudhuri and others.	Rs. A. P. 5,193 10 2½	Rs. A. P.	Rs. A. P. 44 6 8

Dinajpur Collectorate, the 29th July 1902.

J. H. E. GARRETT, Collector.

Notification A.

NOTICE is hereby given, under sections 6 and 13, Act XI of 1859, that the undermentioned estates and shares of estates in the district of Tippera will be put up for sale at the office of the Collector of that district on the 26th September 1902 at 12 o'clock for arrears of revenue and other demands which by law are realisable as arrears of land revenue.

When in columns 5, 7 and 9 of the appended statement it is stated that only a share is to be sold, it is to be understood that a separate account is kept for that share.

Tauzi No.	Name of mahal and pargana.	Sadar jama of whole estate.	Whether the whole estate is to be sold.	If only a share is to be sold, specification of such share or shares.	Names of proprietors of property to be sold.	If only a share is to be sold, the sadar jama of such share.	If the whole estate is to be sold, the arrears due from it.	If only a share is to be sold, the arrears due from it.
1	2	3	4	5	6	7	8	9
985	Taluq Sribatsha Das, pargana Gunaaundi.	Rs. A. P. 1,233 11 7	Whole ...	.....	Srimati Monyakhoya Chowdhurani, manager on behalf of minor Harendra Chandra *alias* Har Kumar Pal Chowdhury and others.	Rs. A. P.	Rs. A. P. 18 12 2	Rs. A. P. .....
480	Gazipur Monipur Chur No. 24-71, pargana Maizardi.	1,233 1 0	Do. ...	.....	Kashi Chandra Pal Chowdhury and others.	.....	84 14 4	.....
1926	Char near Nogaverkandi No. 211, pargana Utter, shahapur.	1,296 10 9	Do. ...	.....	Ishan Chandra Dutt and others.	.....	202 9 4	.....
1923 21	Pargana Bardakhat Doulatpurjoar: the term is from 1321 to 1310 B.S.	1,379 3 10	Do. ...	.....	Bepra Charan Ghosh and others.	.....	172 1 0	.....
2295	Shonapur Tajpur, pargana Zasira.	870 10 0	Do. ...	.....	Tojammal Ali Chowdhury and others.	.....	200 0 0	.....

Tippera Collectorate, the 26th July 1902.

H. W. SCROOPE, Collector.

Notice of Sale for Arrears of Revenue.

NOTICE is hereby given, under section VI, Act XI of 1859, read with Act VII (B.C.) of 1868 and Act II (B.C.) of 1871, that the undermentioned Noabad taluks within the Cox's Bazar khas mahal, in the district of Chittagong, will be put up to public and unreserved sale at the Collector's office of that district on the 2nd September 1902 for arrears and cesses remaining unpaid on the $\frac{25}{26}$th May 1902:—

Name of tenure.	Name of mauza, thana and mahal.	Name of talukdar.	Sadar Jama.		Amount of arrear for which the tenure is to be sold.		
			Rent.	Cesses.	Rent.	Cesses.	Total.
1	2	3	4	5	6	7	8
			Rs. A. P.	Rs. A. P.	Rs. A. P.	Rs. A. P.	Rs. A. P.
47 10—80	Thana Ramoo, mauza Khurumkel, taluk Tajannisa.	Mozaffar Ahmad, son of Asharaf Ali Chowdhuri, of Chowfoldondi.	2,648 8 0	176 13 0	590 6 0	58 15 6	649 5 6
296 289—302	Thana Chakaria, mauza Rajakhali, taluk Bibi Eeprak.	Nezamat Ali Chowdhuri, son of Mohammad Rafi Chowdhuri, of Bora Khim.	1,005 10 0	215 13 6	1,578 4 0	431 9 0	2,009 13 0

Chittagong, the 19th July 1902.

A. H. VERNEDE, Covtd. Depy. Collr., *for* Collr.

NOTICE is hereby given, under sections 6 and 13, Act XI of 1859, that the undermentioned estate or share of estate in the district of Darbhanga will be put up for sale at the office of the Collector of that district on the 5th September 1902, corresponding with 17th Bhado 1309 Fasli, at 12 A.M. on Friday for arrears of revenue and other demands, which by law are realizable as arrears of land revenue.

When in columns 5, 7 and 9 of the appended statement it is stated that only a share is to be sold, it is to be understood that a separate account is kept for that share. All other shares besides that specified will be excluded from the sale.

Tauzi No.	Name of estate, thana or pargana.	Sadar jama of whole estate.	Whether the whole estate is to be sold.	If only a share is to be sold, specification of such share or shares.	Names of proprietors of property to be sold.	If only a share is to be sold, the sadar jama of such share.	If the whole estate is to be sold, the arrears due from it.	If only a share is to be sold, the share due from it.
1	2	3	4	5	6	7	8	9
11810	Ahiari, pargana Bharmara, thana Darbhanga.	Rs. A. P. 1,831 2 4	Whole ...	.....	Lala Binda Prasad, Lala Shew Charan Lal, Lala Chedi Lal, Lala Sital Prasad, Lala Jagar Nath Prasad, &c.	.....	Rs. A. P. 457 11 9	.....

Darbhanga Collectorate, the 24th July 1902.

S. L. MADDOX, Collector.

APPENDIX XXX.

[See Chapter III, Rule 9.]

Advertisement of Sale.

NOTICE is hereby given that the undermentioned plots of land, no longer required by Government, situated along the Assam-Bengal Railway, in the district of Chittagong, will be put up to sale at 11 o'clock on Monday the 22nd September 1902, corresponding with the 6th of Ashwin 1309 B.S., at the Collector's office, Chittagong.

The purchasers of the several plots of land will be subject to the following conditions :—

1st.—The purchasers will have no power to make any excavation on the land nearer than fifteen feet from the Railway fencing, or plough the land closer than three feet from its foundation.

2nd.—If the amount of purchase-money does not exceed Rs. 100, the whole amount must be paid down at once.

3rd.—If the amount of purchase-money exceeds Rs. 100, one-fourth of the amount must be immediately deposited. If the balance be not paid by noon of the fifteenth day after the sale, reckoning the day of sale as one, or if that day be a close holiday, then by noon of the first succeeding office day, the sale shall be cancelled, the sum deposited being forfeited to Government and the lot again put up for sale at the risk of the defaulting purchaser, after issue of advertisement, as in the case of original sale.

4th.—The plots of land will be sold revenue-free to the highest bidders.

5th.—The purchasers shall be put in possession on receipt by the Collector of the orders of the Board confirming the sales.

Consecutive lot number.	Name of district.	Mauza.	Number of mile on which land is situate.	Situated on which side of the Railway.	Approximate area of lot in kanis and acres.		Land excluded from sale from each plot.		Commencement and termination of lot.	Boundary of lot.
					Maghi kani.	Acre.	Reasons for exclusion.	A. R. P.		
1	2	3	4	5	6		7		8	9
					Kani.	A. R. P.				
1	Chittagong ...	Bhatiary	6th mile	East side	43·83	17 2 5	Nil	Nil	Nil	Nil.
2	Ditto ...	Sonaicherry	14th do.	West side	28·57	11 1 27	,,	,,	,,	,,
3	Ditto ...	Bansberia	18th do.	Ditto	25·08	10 1 3	,,	,,	,,	,,
4	Ditto ...	Katzar	20th do.	East side	35·80	14 1 11	,,	,,	,,	,,
5	Ditto ...	Terial	27th do.	West side	29·37	11 2 38	,,	,,	,,	,,
6	Ditto ...	Wahedpur	32nd do.	Ditto	25·31	9 3 29	,,	,,	,,	,,
7	Ditto ...	Gobania	36th do.	Ditto	23·30	9 1 12	,,	,,	,,	,,
8	Ditto ...	Azamnagar	45th do.	East side	21·10	8 1 30	,,	,,	,,	,,

Chittagong, the 26th July 1902.

E. GRAHE, Collector.

Notification.

NOTICE is hereby given, under sections 6 and 13, Act XI of 1859, that the undermentioned estates and shares of estates in the district of Shahabad will be put up for sale at the office of the Collector of that district on Thursday, the 28th August 1902, at 12 noon, corresponding with 9th Bhado 1309 F., for arrears of revenue and other demands which by law are realizable as arrears of land revenue.

When in columns 5, 7 and 9 of the appended statement it is stated that only a share is to be sold, it is to be understood that a separate account is kept for that share and the other share or shares in the estate are excluded from sale.

Tauzi No.	Name of mahal and pargana.	Sadar jama of whole estate.	Whether the whole estate is to be sold.	If only a share is to be sold, specification of such share or shares.	Names of proprietors of property to be sold.	If only a share is to be sold, the sadar jama of such share.	If the whole estate is to be sold, the arrears due from it.	If only a share is to be sold, the arrears due from it.
1	2	3	4	5	6	7	8	9
						Rs. A. P.	Rs. A. P.	Rs. A. P.
484	Mahuli Khurd, pargana Arrah.	550 0 0	Whole ...	.....	Rambaran Singh and others.	.....	190 15 6	.....
763	Koilwar, pargana Barahgawan.	7,770 13 7	Do. ...	.....	Kazi Mohamad Wahid Ashraf, Bishun Pershad, Seri Maharani Beni Parshad Kuari, Babu Saligram Singh and others, proprietors of 16 annas.	.....	*L. R. 1,053 5 11 T. M. 4 8 0 Do. 2 4 0 1,060 1 11	.....
893 Ijmal	Chancher, pargana Behia.	1,713 9 8	.....	Ijmali share to be sold is 5a. 4p. and other share is excluded from sale.	Dhankumar Chand, Basanta Kuar and others.	571 2 11	.....	74 3 2
1211 Ijmal	Suhia, pargana Behia ...	4,253 13 10	.....	Ijmali share to be sold is in Suhia 2a. 8p. Bharauli 5a. 4p. Other shares are excluded from sale.	Nund Lal, Ram Narain Singh and others.	644 15 3	.....	97 10 11
1269	Baruha, pargana Bhojpur.	870 10 8	Whole ...	.....	Jadunundan Singh, Raghunundan Singh and others.	.....	3 8 5	.....
1798	Kusurpa, pargana Chausa.	839 11 6	Do. ...	.....	Bhugwat Sahai, Mussammat Dulahin, Rama Kuar, wife of Raja Ram, Rasbehari Lal and others proprietors of 16 annas.	.....	†L. R. 145 14 4 T. M. 6 0 0 151 14 4	.....
2153	Barahuli, pargana Chainpur.	511 9 2	Do.	.....	Ram Saroop Singh, Chandan Singh and others.	.....	93 1 2	.....
2188	Bairi Raghunathpur, pargana Chainpur.	589 4 6	Do. ...	.....	Sooraj Narain Singh, self and guardian of Adit Prashad Singh.	.....	184 6 10	.....
2906 Ijmal	Umanpore, pargana Chainpur.	5,942 6 4	.....	Ijmali share to be sold is in village— Patilahang ... ... Rs. 13 P. 9 Umanpore ... ... 1 3 Sahijna ... ... 4 3 Chandraull ... ... 10 0 Sariaon ... ... 8 6 Sotwabisopoor ... ... 12 0 Semeria ... ... 8 0 Choukhanda ... ... 16 0 Chak Bhagwat ... 8 0 Hurkutya ... ... 8 0 Ahidoura ... ... 16 0 Kutumanpore ... ... 16 0 Dhora Patisarwa ... 8 0 Saria Balbhadarpore 4 3 Kasthar ... ... 16 0 Kishunpura ... ... 11 0 Other shares are excluded from sale.	Ramdani Rai, Dudh Nath Rai and others.	2,111 13 1	.....	319 1 10
3000 3 and 7	Ruppur, pargana Chainpur.	14,486 15 9	.....	The share of separate account to be sold is—khata 3 in village Ora 8a. and khata 7, 8a. in village Ora. Other shares are excluded from sale with the exception of khata 1 which will also be sold.	Jageshar Singh and others Adhat Singh	354 13 10 355 0 0	.....	109 3 4 .....
3074 Ijmal	Sondhi, pargana Chainpur.	1,636 4 3	.....	Ijmali share to be sold is in village— As. Majhgaon ... ... 16 Baruna ... ... 8 Jignazamin ... ... 8 Madanpura ... ... 8 Sondhi Raste Khandha 8 Mirga Rampur ... ... 8 Khariganwan ... ... 8 Rajiabandh ... ... 8 Share in mahula ... ... 8 Other shares are excluded from sale.	Kishunanund Sham Behari Lal *alias* Gogalall and others.	527 15 7	.....	265 5 5
6095	Pandeypatti, pargana Bhojpur.	620 3 0	Whole ...	.....	Sital Pershad, Kamlapat and others.	.....	106 5 9	.....

* These are the arrears due from khata 1 at March kist, and the sale is held under section XIV, Act XI of 1859.
† These are the arrears due from ijmali share for March kist, and the sale is held under section XIV, Act XI of 1859.

Arrah, the 24th July 1902.

H. COURLAND, Collector.

Notification.

NOTICE is hereby given, under sections 6 and 13, Act XI of 1859, that the undermentioned estates or shares of estates in the district of Jessore will be put up for sale at the Collector's office of that district on 15th September 1902 for arrears of revenue and other demands which by the Regulations and Acts in force are directed to be realised in the same manner as arrears of revenue.

When in columns 5, 7 and 9 of the appended statement it is stated that only a share is to be sold, a separate account is kept for such share and the other share or shares in the estate are excluded from the sale.

Tauzi No.	Name of mahal and pargana.	Sadar jama of whole estate.	Whether the whole estate is to be sold.	If only a share is to be sold, specification of such share or shares.	Names of proprietors of property to be sold.	If only a share is to be sold, the sadar jama of such share.	If the whole estate is to be sold, the arrears due from it.	If only a share is to be sold, the arrears due from it.
1	2	3	4	5	6	7	8	9
5045	Dihi Chapra, pargana Mahamudshahi.	Rs. A. P. 655 10 10	Yes ...	... ...	Devnath Ghosh, Radha Charan Ghosh.	Rs. A. P.	Rs. A. P. 9 1 7	Rs. A. P. .....

Jessore Collectorate, the 6th August 1902. W. N. DELEVINGNE, Collector.

Notification A.

NOTICE is hereby given, under sections 6 and 13, Act XI of 1859, that the undermentioned estates and shares of estates in the district of Chittagong will be put up for sale at the office of the Collector of that district on the 26th September 1902 at 12 A.M. for arrears of revenue and other demands which by law are realisable as arrears of land revenue.

When in columns 5, 7 and 9 of the appended statement it is stated that only a share is to be sold, it is to be understood that a separate account is kept for that share.

Tauzi No.	Name of mahal and pargana.	Sadar jama of whole estate.	Whether the whole estate is to be sold.	If only a share is to be sold, specification of such share or shares.	Names of proprietors of property to be sold.	If only a share is to be sold, the sadar jama of such share.	If the whole estate is to be sold, the arrears due from it.	If only a share is to be sold, the arrears due from it.
1	2	3	4	5	6	7	8	9
2093 2100 1512	Thana Hathazari, Taraf Krishna Kishore Kanungoe.	Rs. A. P. 645 6 7	Only a share will be sold.	Only share No. 1 and no other share will be sold.	Fazal Ahmed, Bazal Samad and others.	Rs. A. P. 524 13 6	Rs. A. P.	Rs. A. P. 131 3 4

N.B.—The amount shown in column 9 represents the arrear due for kist ending 25th May 1902.

Chittagong, the 16th August 1902. P. E. CAMMIADE, Offg. Collector.

Notification A.

NOTICE is hereby given, under sections 6 and 13, Act XI of 1859, that the undermentioned estates and shares of estates in the district of Hooghly will be put up for sale at the office of the Collector of that district on the 25th September 1902 at 12 noon for arrears of revenue and other demands which by law are realisable as arrears of land revenue.

When in columns 5, 7 and 9 of the appended statement it is stated that only a share is to be sold, it is to be understood that a separate account is kept for that share.

Tauzi No.	Name of mahal and pargana.	Sadar jama of whole estate.	Whether the whole estate is to be sold.	If only a share is to be sold, specification of such share or shares.	Names of proprietors of property to be sold.	If only a share is to be sold, the sadar jama of such share.	If the whole estate is to be sold, the arrears due from it.	If only a share is to be sold, the arrears due from it.
1	2	3	4	5	6	7	8	9
35	Mundalghat, pargana Mundalghat.	Rs. A. P. 2,23,423 3 8	.....	Residuary share consisting of 3a. 13g. 3c. 3kag 5½til share of the estate.	Manic Lal Seal and others	Rs. A. P. 51,616 8 6	Rs. A. P.	Rs. A. P. 477 13 10
62	Ramjangal, pargana Mandalghat.	19,342 4 9	.....	Residuary share consisting of 7a. 5g. share of the estate.	Amrita Lal Seal and others.	8,760 9 8	.....	1,138 4 8

Hooghly Collectorate, the 16th August 1902. MAHESH CHANDRA SEN, Sale Deputy Collector.

Notification A.

NOTICE is hereby given, under sections 6 and 13, Act XI of 1859, that the undermentioned estates and shares of estates in the district of Hooghly will be put up for sale at the office of the Collector of that district on the 25th September 1902 at 12 noon for arrears of revenue and other demands which by law are realisable as arrears of land revenue.

When in columns 5, 7, and 9 of the appended statement it is stated that only a share is to be sold, it is to be understood that a separate account is kept for that share.

Tauzi No.	Name of mahal and pargana.	Sadar jama of whole estate.	Whether the whole estate is to be sold.	If only a share is to be sold, specification of such share or shares.	Names of proprietors of property to be sold.	If only a share is to be sold, the sadar jama of such share.	If the whole estate is to be sold, the arrears due from it.	If only a share is to be sold, the arrears due from it.
1	2	3	4	5	6	7	8	9
4068, residuary.	Kalupukhuria, thana Pandua, pargana Arambagh.	Rs. A. P. 13,626 1 1	.....	Residuary, *i. e.*, 2 annas 13 gandas 1 cora 1 kranti share of the estate.	Prem Chand Roy, Bama Podo Roy, and others of Madhobpur, thana Arambagh.	Rs. A. P. 2,253 9 5	Rs. A. P.	Rs. A. P. 7,874 10 4

Hooghly Collectorate, Chinsura, the 30th July 1902. R. C. HAMILTON, Collector.

Notification A.

NOTICE is hereby given, under sections 6 and 13, Act XI of 1859, that the undermentioned estates and shares of estates in the district of Chittagong will be put up for sale at the office of the Collector of that district on the 8th September 1902 at 12 A.M. for arrears of revenue and other demands which by law are realizable as arrears of land revenue.

When in columns 5, 7 and 9 of the appended statement it is stated that only a share is to be sold, it is to be understood that a separate account is kept for that share.

Tauzi No.	Name of mahal and pargana.	Sadar jama of whole estate.	Whether the whole estate is to be sold.	If only a share is to be sold, specification of such share or shares.	Names of proprietors of property to be sold.	If only a share is to be sold, the sadar jama of such share.	If the whole estate is to be sold, the arrears due from it.	If only a share is to be sold, the arrears due from it.
1	2	3	4	5	6	7	8	9
4098 4119 3118	Thana Chakaria, taraf Sher Masta Khan Chowdhury.	Rs. A. P. 527 0 6	The whole estate will be sold.		Badiajjama, Abdul Majid and others.	Rs. A. P.	Rs. A. P. 60 4 5	Rs. A. P. ....

The amount shown in column 8 represents the arrears due for kist ending 25th February 1902.

Chittagong Collectorate, the 28th July 1902. E. GEAKE, Collector.

Notice of Sale for Arrears of Revenue.

NOTICE is hereby given, under section 6, Act XI of 1859, read with Act VIII (B.C.) of 1868 and Act II (B.C.) of 1871, that the undermentioned Noabad taluk in the district of Chittagong will be put up to public and unreserved sale at the Collector's office of that district on 2nd September 1902 at 12 noon for arrears of rents and cesses remaining unpaid on the 25th May 1902:—

No. of tenure.	Name of mauza, thana and mahal.	Name of proprietor.	SADAR JAMA.		AMOUNT OF ARREARS FOR WHICH THE TENURE IS TO BE SOLD.		
			Rent.	Cess.	Rent.	Cess.	Total.
1	2	3	4	5	6	7	8
D0 132	Mahal Noabad, mauza Khurulia, thana Ramu, taluk Baksha Ali.	General Manager, Court of Wards, on behalf of the estate of Mahabat Ali Chowdhury.	Rs. A. 686 9	Rs. A. P. 92 8 0	Rs. A. 2,554 4	Rs. A. 370 2	Rs. A. 2,924 6

Chittagong, the 2nd August 1902. A. H. VERNEDE, *for* Collector.

Notification A.

NOTICE is hereby given, under sections 6 and 13, Act XI of 1859, that the undermentioned estates and shares of estates in the district of Muzaffarpur will be put up for sale at the office of the Collector of that district on the 8th September 1902, corresponding with 20th Bhado 1309 F.S., for arrears of revenue and other demands which by law are realisable as arrears of land revenue.

When in columns 5, 7 and 9 of the appended statement it is stated that only a share is to be sold, it is to be understood that a separate account is kept for that share.

Tauzi No.	Name of mahal and pargana.	Sadar jama of whole estate.	Whether the whole estate is to be sold.	If only a share is to be sold, specification of such share or shares.	Names of proprietors of property to be sold.	If only a share is to be sold, the sadar jama of such share.	If the whole estate is to be sold, the arrears due from it.	If only a share is to be sold, the arrears due from it.
1	2	3	4	5	6	7	8	9
		Rs. A. P.				Rs. A. P.	Rs. A. P.	Rs. A. P.
308 Rs.	Amwa Kalan Newazun, pargana Babra Champaran.	2,000 12 9	.....	Residuary share, 5a. 7p. ... ... All other shares besides that specified will be excluded from sale.	Babu Isre Prosad and others.	698 9	.....	17 9 7
1680	Baijnathpur Krishn Coomar, pargana Gadehsund.	671 8 1	The whole	..	Babu Durga Coomar Upadhea and others.	.....	161 3 0	.....
2486 Rs.	Pojha-Basunt, Chukia Gurjaul, pargana Bisara.	1,693 10 7	.....	Residuary share— A. G. C. KT. Pojha-Basunt ... ... 5 1 2 2 Barchia and Pojhia Zamin ... ... 5 1 2 2 Jahanabad ... ... 5 1 2 2 Ghataro-khas-zamin ... 5 1 2 2 Chuk Rahmat ... ... 5 1 2 2 Hansi Gharam ... ... 5 1 2 2 Ghataro doolum ... ... 3 16 2 1 Raghoonathpur ... ... 3 16 0 0 All other shares besides that specified will be excluded from sale.	Babu Zoolumdhari Prosad Singh and others.	537 8 8	.....	106 3 5
5150	Poorab Chhupra Vishwnath Singh, pargana Nanpur.	642 8 7	The whole	.....	Babu Dabi Prosad Singh and others.	.....	33 10 9	.....
11277	Chatarbhoojpur Bhairo Missar, pargana Rutti.	646 12 2	Ditto ...	.....	Rai Manindra Bahadur, minor under the guardianship of Musamat Goolab Kuner, mother, and Babu Moti Chand and others.	.....	849 3 2	.....
11714	Kasnaldah, pargana Areath.	855 13 4	Ditto ...	.....	Mirza Nazir Hossen and others.	.....	207 2 10	.....

Muzaffarpur Collectorate, the 25th July 1902.

E. V. LEVINGE, Collector

Notification A.

NOTICE is hereby given, under sections 6 and 13, Act XI of 1859, that the undermentioned estates and shares of estates in the district of Backergunge will be put up for sale at the office of the Collector of that district on the 26th September 1902 at 12 o'clock for arrears of revenue and other demands which by law are realisable as arrears of land revenue.

When in columns 5, 7 and 9 of the appended statement it is stated that only a share is to be sold, it is to be understood that a separate account is kept for that share.

Tauzi No.	Name of mahal and pargana.	Sadar jama of the whole estate.	Whether the whole estate is to be sold.	If only a share is to be sold, specification of such share or shares.	Names of proprietors of property to be sold.	If only a share is to be sold, the sadar jama of such share.	If the whole estate is to be sold, the arrears due from it.	If only a share is to be sold, the arrears due from it.
1	2	3	4	5	6	7	8	9
		Rs. A. P.				Rs. A. P.	Rs. A. P.	Rs. A. P.
1994	Taluq Biswa Nath Sen, of pargana Khanya Bahadurnagar.	570 6 11½	Whole estate.	.....	Ram Narain Sen and others.	.....	142 6 9	.....
2749	Taluq Durga Gangeswar of pargana Uttar Sahabazpur.	1,037 11 2½	.....	Separate account No. 1 for 8 annas' share.	Guru Prosanna Roy and others.	518 13 8	.....	54 6 5
4534	Char Sarikol of pargana Jazira.	3,441 11 3	Whole estate.	.....	Mr. G. L. Garth and Mr. H. L. Weatheral, trustees to the estate of Tojambal Ali Choudhury and others.	.....	2,841 11 3	.....
4688	Char Jahapur of pargana Jazira.	5,000 0 0	Ditto ...	.....	Ditto ...	.....	300 0 0	.....
5233	Gar Makarari, howla No. 1, of Char Tabgi of pargana Dakshin Sahabazpur.	3,077 0 0	Whole howla.	.....	Basanta Kumar Guha ...	.....	460 0 0	.....

Backergunge Collectorate, the 31st July 1902.

D. WESTON, Collector.

Advertisement of Sale.

NOTICE is hereby given that the undermentioned plots of land, no longer required by Government, situated along the Assam-Bengal Railway, in the district of Tippera, will be put up to sale at 12 o'clock on the 26th day of September 1902, corresponding with the 10th Asvin 1309 Fasli, at the office of the Collector of Tippera.

The purchasers of the several plots of land will be subject to the following conditions:—

1st.—The purchasers will have no power to make any excavations on the land nearer than 15 feet from the railway fencing, or plough the lands closer than 3 feet from its foundation.

2nd.—If the amount of purchase-money does not exceed Rs. 100, the whole amount must be paid down at once.

3rd.—If the amount of purchase-money exceed Rs. 100, one-fourth of the amount must be immediately deposited. If the balance be not paid by noon of the fifteenth day after the sale, reckoning the day of sale as one, or if that day be a close holiday, then by noon of the first succeeding office day, the sale shall be cancelled, the sum deposited being forfeited to Government, and the lot again put up for sale at the risk of the defaulting purchaser, after issue of advertisement, as in the case of original sale.

4th.—The plots of land will be sold revenue-free to the highest bidders.

5th.—The purchasers shall be put in possession on receipt by the District Collector of the orders of the Board confirming the sale.

Consecutive lot No.	Name of district.	Pargana and mauza.	Number of mile on which land is situate.	Situated on which side of the railway.	Approximate area of lot in bighas and in acres.		Land excluded from sale from each lot.		Commencement and termination of lot.	Boundary of lot.
					B. K. C.	A. R. P.	Reasons for exclusion.	A. R. P.		
1	2	3	4	5	6		7		8	9
1	Tippera ...	Pargana Homnabad, mauza Uttarkul.	At mile No. 78.	South-west of Railway line.	3 6 2	1 0 14·9	.....	.....	Lots Nos. 1 to 18	*North*—Mauza Uttarkul. *South*—Mauza Uttarkul and Railway line. *East*—Mauza Uttarkul. *West*—Railway line.
2	Ditto ...	Pargana ditto, mauza Nosgaon.	Ditto	Ditto	0 15 5	0 1 ·4	..	.....	Ditto ...	*North*—Mauza Uttarkul and Railway line. *South*—Mauza Nosgaon. *East*—Railway line and mauza Nosgaon. *West*—Mauza Nosgaon.
3	Ditto ...	Pargana ditto, mauza Ashkanta.	At mile No. 76.	East of Railway line.	1 17 0	0 2 19·5	.....	.....	Ditto ...	*North*—Railway line. *South*—Mauza Ashkanta. *East*—Railway line. *West*—Mauza Ashkanta.
4	Ditto ...	Pargana Homnabad, mauza Lakshanu.	At mile No. 0.	Within ¼ mile of the Railway station.	1 8 11	0 1 35·5	.....	.....	Ditto ...	*North*— *South*— *East*— } Mauza Lakshanu. *West* District Board road.
5	Ditto ...	Pargana Mehar, mauza Upalata.	At mile No. 11.	East of Railway line.	0 17 15	0 1 7·4	.....	.....	Ditto ...	*North*—Mauza Upalata. *South*—Railway line. *East*— *West*— } Mauza Upalata.
6	Ditto ...	Pargan Meharkul mauza Bejoypur.	At mile No. 10.	North of Railway line.	2 16 4	0 3 28·7	.....	.....	Ditto ...	*North*—Mauza Bejoypur. *South*—Bikrampur land attached to the Railway fencing. *East*—Bejoypur mauza. *West*—Railway line.
7	Ditto ...	Pargana Mehar, mauza Naora.	At mile No. 9½.	East of Railway line.	5 0 8	1 2 25·7	.....	.....	Ditto ...	*North*—Railway line. *South*—Southern bank of Dighi. *East*—Khal or boundary of mauza Borulia. *West*—Dighi water.
8	Ditto ...	Ditto ...	Ditto	Ditto	8 7 8	2 3 2·9	.....	.....	Ditto ...	*North*—Railway line. *South*—Southern bank of Naora Dighi. *East*—Naora Dighi. *West*—Chandra Kumar Chakerbutty, Jabiraddi Patwari and Moniram Dhupi.
9	Ditto ...	Pargana Meharkul mauza Saidpur.	At mile No. 7.	South of Railway line.	47 5 14	15 2 21·4	.....	.....	.....	*North*— *South*— } Gangjuri khal. *East*—District Board road. *West*—Gangjuri khal
10	Ditto ...	Ditto ...	Ditto	Ditto	32 12 8	10 3 5·6	.....	.....	.....	*North*—Gangjuri khal. *South*—Saidpur. *East*—Railway line. *West*—District Board road.
11	Ditto ...	Ditto ...	Ditto	Ditto	10 14 4	3 2 6·6	.....	.....	.....	*North*—Gangjuri khal. *South*—Jirat Gazi and khash patit. *East*—District Board road. *West*—Gangjuri khal.
12	Ditto ..	Ditto ...	Ditto	Ditto	14 12 12	4 3 14·2	.....	.....	.....	*North*—Rajbadi. *South*—Dakalia river. *East*—District Board road. *West*—Gangjuri khal.
13	Ditt ...	Pargana ditto, mauza Barapara.	At mile No. 10.	North of Railway line.	10 12 13	3 2 2·8	.....	.....	.....	*North*—Gangjuri khal. *South*—Khal or Charpara mauza. *East*—Khal, khal side and District Board road. *West*—Dakshin Bejoypur.
14	Ditto ...	Pargana Tora, Tapa Ibrahimpur.	At mile No. 17.	East of Railway line.	120 13 14	39 3 23·8	.....	.....	.....	*North*—Mauza Toragor. *South*—Railway line. *East*—Mauza Toragor. *West*—Hajigunge khal.
15	Ditto ...	Pargana ditto, mauza Kangnish Hatila.	At mile No. 15.	Ditto	98 9 4	32 2 6·9	.....	.....	Lots Nos. 1 to 18...	*North*—Railway line. *South*—Kangnish mauza. *East*—Khal of Sholkhali. *West*—Kangnah.
16	Ditto ...	Pargana ditto, mauza Panchbaria.	At mile No. 23.	Ditto	31 14 12	10 1 38·6	.....	.....	.....	*North*—Debpur brickfield. *South*— *East*— *West*— } Mauza Panchbaria.
17	Ditto ...	Pargana ditto, mauza Debpur.	Ditto	Ditto	45 7 14	14 1 10·9	.....	.....	.....	*North*—Railway line. *South*—Debpur brickfield. *East*— *West*— } Debpur mauza.
18	Ditto ...	Pargana ditto, mauza Panchbaria Sota Sundar.	Ditto	Ditto	2 13 8	0 3 21·4	.....	.....	.....	*North*—Panchbaria brickfield. *South*—Dakatia river. *East*—Mauza Panchbaria Sota Sundar. *West*—Mauza Panchbaria Sota Sundar.

Tippera Collectorate, the 2nd August 1902.

H. W. P. SCROOPE, Collector.

Advertisement of Sale.

NOTICE is hereby given that the undermentioned plots of land, no longer required by Government, situated along the Assam-Bengal Railway, in the district of Noakhali, will be put up to sale at 12 o'clock on Monday, the 29th September 1902, corresponding with the 13th Ashwin 1309 B. S., in the office of the Collector of Noakhali.

The purchasers of the several plots of land will be subject to the following conditions:—

1st.—The purchasers will have no power to make any excavations on the land nearer than 15 feet from the railway fencing, or plough the lands closer than 3 feet from its foundation.

2nd.—If the amount of purchase-money does not exceed Rs. 100, the whole amount must be paid down at once.

3rd.—If the amount of purchase-money exceed Rs. 100, one-fourth of the amount must be immediately deposited. If the balance be not paid by noon of the fifteenth day after the sale, reckoning the day of sale as one, or if that day be a close holiday, then by noon of the first succeeding office day, the sale shall be cancelled, the sum deposited being forfeited to Government, and the lot again put up for sale at the risk of the defaulting purchaser, after issue of advertisement, as in the case of original sale.

4th.—The plots of land will be sold revenue-free to the highest bidders.

5th.—The purchasers shall be put in possession on receipt by the District Collector of the orders of the Board confirming the sale.

Consecutive lot number.	Name of district.	Pargana and mauza.	Number of mile on which land is situate.	Situated on which side of the Railway.	Approximate area of lot in bighas and in acres.		Land excluded from sale from each lot.		Commencement and termination of lot.	Boundary of lot.
					B. K. C.	A. R. P.	Reasons for exclusion.	A. R. P.		
1	2	3	4	5	6		7		8	9
					Case No. 1.					
1	Noakhali	Pargana Bedrabad, mauza Sahadebpur.	56	South-west	1 10 6	0 2 0	.....	.....	.....	*North*—Road to Railway station. *South*—Feni school compound. *East*—Ditch. *West*—Cart stand.
2	Ditto ...	Pargana Bedrabad, mauza Barahipur.	56	North-east	4 8 12	1 1 35	.....	.....	.....	*North*—Village road. *South*— *East*— *West*— } Khal.
3	Ditto ...	Ditto ...	56	Ditto ...	4 9 0	1 1 35	.....	.....	.....	*North*—Cultivated land. *South*—Village road. *East*—Cultivated land. *West*—Tank.
					Case No. 2.					
4	Ditto ...	Pargana Alahabad, mauza Fatehpur.	58	South-west	0 11 1	0 0 29	.....	.....	.....	*North*—Railway land. *South*— *East*— *West*— } Cultivated land.
5	Ditto ...	Pargana Bedrabad, mauza Matbaria.	58	North ...	0 8 14	0 0 23	.....	.....	.....	*North*—Cultivated land. *South*—Railway land. *East*— *West*— } Cultivated land.
6	Ditto ...	Ditto ...	58	North-east	0 4 8	0 0 13	.....	.....	.....	*North*—Cultivated land. *South*—Railway land. *East*— *West*— } Cultivated land.
7	Ditto ...	Pargana Amirabad, mauza Fazilpur.	50	Ditto ...	0 13 14	0 0 37	.....	.....	.....	*North*—Cultivated land. *South*—Railway land. *East*— *West*— } Cultivated land.
					Case No. 3.					
8	Ditto ...	Pargana Amirabad, mauza Rajnagar.	49	North ...	14 15 8	4 3 21	.....	.....	.....	*North*—Homestead land. *South*—Railway land. *East*—Muhuri river. *West*—Railway land.

Noakhali, the 29th July 1902.

SASI BHUSAN SEIN, Depy. Collector in charge.

Notification B.

NOTICE is hereby given, under sections 5 and 13, Act XI of 1859, that unless the arrears mentioned below are paid on or before the next latest date of payment, viz., the 28th June 1902, the undermentioned estates or shares of estates in the district of Tippera will be put up for sale at the office of the Collector of that district on the 26th September 1902 at 12 o'clock for the said arrears.

When in columns 5, 7 and 9 of the appended statement it is stated that only a share is to be sold, it is to be understood that a separate account is kept for that share.

Tauzi No.	Name of mahal and pargana.	Sadar jama of whole estate.	Whether the whole estate is to be sold.	If only a share is to be sold, specification of such share or shares.	Names of proprietors of property to be sold.	If only a share is to be sold, the sadar jama of such share.	If the whole estate is to be sold, the arrears due from it.	If only a share is to be sold, the arrears due from it.	Nature and amount of demand for which to be sold.
1	2	3	4	5	6	7	8	9	10
		Rs. A. P.				Rs. A. P.	Rs. A. P.	Rs. A. P.	Rs. A. P.
1915	Pargana Uttar Sahapur char near Nagarer Kandi, No. 211.	1,200 10 9	Whole ...	.....	Isban Chandra Datta and others.	.....	202 9 4	.....	202 9 4

Tippera Collectorate the 29th May 1902.

H. W. SCROOPE, Offg. Collector.

Notification A.

NOTICE is hereby given, under sections 6 and 13, Act XI of 1859, that the undermentioned estates and shares of estates in the district of Midnapore will be put up for sale at the office of the Collector of that district on Friday, the 26th September 1902 for arrears of revenue and other demands which by law are realisable as arrears of land revenue.

When in columns 5, 7 and 9 of the appended statement it is stated that only a share is to be sold, it is to be understood that a separate account is kept for that share, and that the other share or shares in the estate are excluded from the sale.

Tausi No.	Name of mahal and pargana.	Sadar jama of whole estate.	Whether the whole estate is to be sold.	If only a share is to be sold, specification of such share or shares.	Names of proprietors of property to be sold.	If only a share is to be sold, the sadar jama of such share.	If the whole estate is to be sold, the arrears due from it.	If only a share is to be sold, the arrears due from it.
1	2	3	4	5	6	7	8	9
		Rs. A. P.				Rs. A. P.	Rs. A. P.	Rs. A. P.
154	Pargana Bajarpore, mahal Panchbajari.	650 10 8	Entire ...	.....	Sarat Chandra Jana and others.	.....	71 2 8	.....
276	Pargana Ballsita, mahal Bhitarbinode	1,688 14 10	Do. ...	.....	Maheswar Masanta and others.	.....	180 4 9	.....
374	Pargana Bhaitgar Bahirimutha, mahal Bhagabanpore *alias* Bar Bhagabanpore.	1,010 9 5	.....	S. A. I	Madhusudan Das	605 4 9	.....	37 12 0
588	Pargana Dakhinmal, mahal Haripore.	6,769 1 5	.....	S. A. II	Haripriya Devi	3,384 5 9	.....	740 0 3
931	Pargana Kasijora, mahal Chakdaha *alias* Radhaballavpore.	2,185 8 0 with police.	.....	Residuary share excluding S. A. Nos. I, II, III, IV, V, VI.	Srimaty Niroda Moyi Dasi and others.	1,232 9 5	.....	282 11 9
937	Pargana Kasijora, mahal Gar Purusothampore *alias* Chaitannapore.	738 10 8	.....	Residuary share excluding S. A. Nos. I and II.	Ganga Narain Maity and others.	390 14 8	.....	36 7 3
939	Pargana Kasijora, mahal Gavai.	2,467 8 3	Entire ...	.....	Srinarain Pal	.....	270 0 0	.....
944	Pargana Kasijora, mahal Gumukpota.	3,185 0 0 with police.	.....	S. A. I	Mani Mohon Ray proprietor Jogendra Nath Pathak mortgagee.	1,592 8 0	.....	174 8 0
947	Pargana Kasijora, mahal Gogras Patna.	1,512 2 3 with police.	.....	Residuary share excluding S. A. I.	Shaikh Sorfuddin and others	604 9 9	.....	55 3 9
948	Pargana Kasijora, mahal Gogras Kesabber.	1,005 8 8	Entire ...	.....	Srimotya Niroda Moyi Dasi and others.	.....	110 0 0	.....
974	Pargana Kasijora, mahal Khandakhola.	936 11 2	Do. ...	.....	Srimotya Kailashi Dasi and others.	.....	102 8 0	.....
978	Pargana Kasijora, mahal Manahorpur *alias* Prasad Chak.	1,635 15 6	Do. ...	.....	Srimotya Niroda Moyi Dasi and others.	.....	178 8 0	.....
1007	Pargana Kasijora, mahal Purba Itra.	43,145 8 3 with police.	.....	Residuary share excluding S. A. Nos. 1, 3, 4, 5, 6, 7, 8, and 9.	Manik Lal Seal	13,109 5 7	.....	75 7 6
1019	Pargana Kasijora, mahal Sadhumpota.	675 1 11	Entire ...	.....	Srimotya Tarangini Dassi ...	.....	74 4 0	.....
1080	Pargana Kasijora, mahal Uther Usatpore.	3,473 9 7	.....	S. A. 8	Nimai Chand De and others	640 0 0	.....	70 0 0
1066	Pargana Kasijora, kismat mahal Palsa Uther.	2,039 1 2 with police.	.....	Residuary share excluding S. A. 1, 2, 3, 4.	Amarnath Ghose and others	532 5 2	.....	59 4 9
1346	Pargana Khatnagor, mahal Dewli.	1,060 5 9	Entire ...	.....	Nimai Chand De	.....	117 14 3	.....
1467	Pargana Khander, mahal Banageria *alias* Sahorda.	2,098 3 6	.....	Residuary share excluding S. A. Nos. 4, 5, 6, 8, 9, 10, 11, 12, 13, 14, 15, 16.	Sibaprasad Bhakhat and others.	975 12 4	.....	24 4 1
1730	Pargana Moynachore, mahal Anandapore.	5,657 4 9	.....	S. A. 8	Sripati Charan De	1,795 3 8	.....	196 14 6
1731	Pargana Moynachore, mahal Ankhua Purba.	1,001 7 2	.....	Residuary share excluding S. A. I.	Ganganarain Maity	560 11 7	.....	53 4 6
1884	Pargana Majnamutha, mahal Nankar Bajapti.	2,130 9 0	.....	Residuary share excluding S. A. Nos. 1, 2, 4, 5, 6, 7.	Purna Chandra Mitra and others.	746 13 2	.....	163 5 1
1884	Ditto ditto ...	2,130 9 0	.....	S A. I	Kritarthamoyi and others ...	703 13 5	.....	154 0 9
2246	Pargana Sabang, mahal Mahar.	1,302 1 0	Entire ...	.....	Syed Matanath Ali and others	.....	33 8 0	.....
2247	Ditto ditto ...	1,445 9 0	Do. ...	.....	Sarat Chandra Jana and others.	.....	156 9 0	.....
2427	Pargana Sahapur, mahal Hasimpore.	1,014 2 10 with police.	Do. ...	.....	Girish Chandra Jana and others.	.....	110 12 6	.....
				Temporary-settled Estates, Part II.				
2884	Pargana Pataspore, mahal Mangolpore.	2,491 0 0	.....	Residuary share excluding S. A. No. 2.	Upendra Nandan Das Mohapatra.	2,016 2 6	.....	14 8 0

Midnapore Collectorate, Arrear Collection Department, the 16th August 1902. H. LUSON, Collector of Midnapore.

Notification.

NOTICE is hereby given, under sections 6 and 13, Act XI of 1859, that the undermentioned estates or shares of estates in the district of Dacca will be put up for sale at the Collector's office of that district on the 23rd September 1902 for arrears of revenue and other demands which by the Regulations and Acts in force are directed to be realised in the same manner as arrears of revenue.

When in columns 5, 7, and 9 of the appended statement it is stated that only a share is to be sold, a separate account is kept for such share and the other share or shares in the estate are excluded from the sale :—

Tausi No.	Name of mahal and pargana.	Sadar jama of whole estate.	Whether the whole estate is to be sold.	If only a share is to be sold, specification of such share or shares.	Names of proprietors of property to be sold.	If only a share is to be sold, the sadar jama of such share.	If the whole estate is to be sold, the arrears due from it.	If only a share is to be sold, the arrears due from it.
1	2	3	4	5	6	7	8	9
		Rs. A. P.				Rs. A. P.	Rs. A. P.	Rs. A. P.
8468	Pargana Khijirpur Gogchar Krokchar within char Bhedar.	558 0 0	16 annas ...	.....	Lalit Mohan Rai ...	.....	212 0 0	.....

Dacca Collectorate, the 13th August 1902. J. T. RANKIN, Collector of Dacca.

Notification A.

NOTICE is hereby given, under sections 6 and 13, Act XI of 1859, that the undermentioned estates and shares of estates in the district of Saran will be put up for sale at the office of the Collector of that district on the 22nd September 1902 at 11 A.M. for arrears of revenue and other demands which by law are realisable as arrears of land revenue.

When in columns 5, 7 and 9 of the appended statement it is stated that only a share is to be sold, it is to be understood that a separate account is kept for that share.

Tausi No.	Name of mahal and pargana.	Sadar jama of whole estate.	Whether the whole estate is to be sold.	If only a share is to be sold, specification of such share or shares.	Names of proprietors of property to be sold.	If only a share is to be sold, the sadar jama of such share.	If the whole estate is to be sold, the arrears due from it.	If only a share is to be sold, the arrears due from it.
1	2	3	4	5	6	7	8	9
				Part I.		Rs. A. P.	Rs. A. P.	Rs. A. P.
78	Deopoor, pargana Bal	3,309 12 10	Entire ...	Nil	Babu Gulab Chand ...	.....	320 0 3	.....
							As.	
394	Benut, pargana Bal ..	883 15 8	.	Ijmali—				
				Benut 8	Harihar Pd. and others	650 2 8	.....	2 15 3
				Mashantola 12				
				Rampoor 16				
				Birtimihdar Bhadaur 16				
				All other shares besides that specified will be excluded from sale.				
							As. P.	
2074	Batardeh, pargana Dangsi.	1,425 0 0	... .	Ijmali—				
				Bhagar Jallaur 8 0	Sarjoo Pd., Narain Singh, Siri Pd. Narain Singh and others.	661 3 7	.....	54 4 4
				Biralcha 2 0				
				Bhadeya 5 4				
				Kotwa 8 0				
				Bhadknian 6 8				
				Panditpura 8 0				
				Dangsi 2 0				
				Bochea 8 0				
				Batardeh 2 8				
				Pipra 1 4				
				Bhagwar 6 8				
				Sorahia 2 0				
				Parsowna 8 0				
				Parsa 8 0				
				All other shares besides that specified will be excluded from sale.				
				Part II.				
2086	Deara Baghwar or Baghwar Deara, pargana Dangsi.	626 0 0	Entire ...	.....	Babu Sheopertap Sahai and others.	.....	0 7 0	.....
				Part I.				
				A. P. K. M. D. K. B. T.				
2492	Kerwakatsa, pargana Gon.	3,124 6 8		Ijmali—				
				Kerwa 0 8 7 2 10 0 0 0	Isar Sahai and others ...	1,534 1 2	.....	112 6 2
				Parsa 0 7 3 10 0 0 0 0				
				Bajrahia ... 0 9 4 10 0 0 0 0				
				Katsakeopoor 8 8 0 0 0 0 0 0				
				Kumhaila ... 9 9 3 15 0 0 0 0				
				Rampooratowli 12 6 0 0 0 0 0 0				
				Pearapoor ... 10 1 17 10 0 0 0 0				
				Siswa 6 0 7 10 0 0 0 0				
				Sarayabasant ... 9 4 10 0 0 0 0 0				
				Sarayarathnagar 10 2 17 10 0 0 0 0				
				Faridpur ... 4 8 5 0 0 0 0 0				
				Fatehpur ... 8 10 5 0 0 0 0 0				
				Ardewa 12 6 0 0 0 0 0 0				
				Akolhi 8 10 5 0 0 0 0 0				
				Usri 8 5 11 5 0 0 0 0				
				Galibpur ... 10 1 17 10 0 0 0 0				
				Chowrasi ... 8 10 5 0 0 0 0 0				
				Agahra 10 11 5 0 0 0 0 0				
				Achitpur ... 9 7 0 9 12 13 2 10				
				Ghurna ... 12 6 0 0 0 0 3 0				
				Chhapramahesh 8 10 5 0 0 0 0 0				
				Downgodhua ... 8 10 5 0 0 0 0 0				
				All other shares besides that specified will be excluded from sale.				
						A. P. K.		
2612	Mithepoor pargana ...	747 11 8	.....	Ijmali—				
				Repura 9 0 0	Musama.. Jagpati Kuar and others.	525 11 10	.....	13 5
				Mithepoor 10 9 10				
				Sirsa *alias* Parsa 11 5 18				
				Bhualpoor 13 3 0				
				All other shares besides that specified will be excluded from sale.				
							As.	
3474/1	Gamhari, pargana Madhal.	4,218 13 0	.... .	Separate account No. 1—				
				Gamhari Mathia 2	Chitrkut Nath, Badri Nath and Rameshar Nath and others.	527 5 8	.....	0 11 1
				Hamidpur 2				
				Sauwalia 2				
				Kamalmarwa 2				
				Sitalpur paraya 2				
				Ghausgarora 2				
				Rewteh 2				
				Banskali 2				
				Khaira Asam 2				
				Dewkuti 2				
				Hakam 2				
				Sisai 2				
				Safiabad 2				
				Mangroochapra 2				

Tauzi No.	Name of mahal and pargana.	Sadar jama of whole estate.	Whether the whole estate is to be sold.	If only a share is to be sold, specification of such share or shares.	Names of proprietors of property to be sold.	If only a share is to be sold, the sadar jama of such share.	If the whole estate is to be sold, the arrears due from it.	If only a share is to be sold, the arrears due from it.
1	2	3	4	5	6	7	8	9
				As. Separate account No. 1—*concld.* Rahra ... ... 2 Rohuatal ... ... 2 Gaura ... ... 2 Gauri ... ... 2 Sankarpoora ... ... 2 Fakharpoora ... ... 2 Ramgadh ... ... 2 Bamoo ... ... 2 All other shares besides that specified will be excluded from sale.		Rs. A. P.	Rs. A. P.	R S. A. P.
4597/9	Sheodiari, pargana Manjhi.	13,840 15 6	.....	A. Separate account No. 9— Sheodiari ... ... 1 All other shares besides that specified will be excluded from sale.	Babu Lal Singh, through Musamat Pachraitan Kuar.	865 1 0	.....	216 4 0
4597/10	Ditto ...	13,840 15 6	.....	P. K. Separate account No. 10— Sheodiari ... ... 9 12 All other shares besides that specified will be excluded from sale.	Bhirgunath Singh and others.	692 0 9	.....	129 11 0

Saran Collectorate, the 18th August 1902.

P. G. ROGERS, *for* Collector.

Advertisement of Sale.

NOTICE is hereby given that the proprietary right of Government, as specified in the conditions of sale below, to the undermentioned estate, situate in the district of Khulna, will be put up to sale at the Khulna Collectorate on the 29th September 1902, corresponding to 13th Aswin 1909 B.S.

The purchasers will be subject to the following conditions of sale:—

Conditions of Sale.

1st.—The estate to be sold to the highest bidder above the upset price, which will be fixed by the Collector at the time of sale. The purchaser of this estate will be considered as the proprietor of the estate, and the entire proprietary right of Government in such estate will be transferred to him subject to the revenue fixed in perpetuity.

2nd.—The sale to be subject to existing leases and to the rights conferred by the settlement proceedings and by the laws in force, and purchasers to be bound to respect the rights of resident cultivators who have signed the schedule of assessment prepared by the revenue authorities.

3rd.—If the amount of purchase-money do not exceed Rs. 100, the whole amount to be paid down at once.

4th.—If the amount of purchase-money exceed Rs. 100, one-fourth of the amount of bid to be immediately deposited. If the balance be not paid by noon of the fifteenth day after the sale, reckoning the day of sale as one, or if that day be a close holiday, then by noon of the first succeeding office day, the sale is to be cancelled (the sum deposited being forfeited to Government), and the estate to be again put up to sale at the risk of the defaulting purchaser, after issue of advertisement, as in the case of original sale—

Number on the district roll.	Name of estate and pargana.	Approximate area—		Government revenue assessed.	Remarks.
		In bighas.	In acres.		
1	2	3		4	5
		B. K. CH.	A. R. P.	Rs. A.	
944	Haridaskati, pargana Malui	1 13 0	0 2 13	1 2	

Collector's Office, Khulna, the 18th August 1902.

S. C. MUKERJEE, Collector.

Advertisement of Sale.

NOTICE is hereby given that the undermentioned plots of land, no longer required by Government, situated along the Assam Bengal Railway, in the district of Tippera, will be put up to sale at 12 o'clock on the 3rd day of October 1902, corresponding with 17th Assin (1309 Fusli) at the office of the Collector of Tippera.

The purchasers of the several plots of land will be subject to the following conditions:—

1st.—The purchasers will have no power to make any excavations on the land nearer than 15 feet from the railway fencing, or plough the lands closer than three feet from its foundation.

2nd.—If the amount of purchase-money does not exceed Rs. 100, the whole amount must be paid down at once.

3rd.—If the amount of purchase-money exceed Rs. 100, one-fourth of the amount must be immediately deposited. If the balance be not paid by noon of the fifteenth day after the sale, reckoning the day of sale as one, or if that day be a close holiday, then by noon of the first succeeding office day, the sale shall be cancelled, the sum deposited being forfeited to Government, and the lot again put up for sale at the risk of the defaulting purchaser after issue of advertisement as in the case of original sale.

4th.—The plots of land will be sold revenue-free to the highest bidders.

5th.—The purchasers shall be put in possession on receipt by the District Collector of the orders of the Board confirming the sale.

Consecutive lot No.	Name of district.	Pargana and mauza.	Number of mile on which land is situate.	Situated on which side of the railway.	Approximate area of lot in bighas and in acres.		Land excluded from sale from each lot.		Commencement and termination of lot.	Boundary of lot.
					B. K. C.	A. R. P.	Reasons for exclusion.	A. R. P.		
1	2	3	4	5	6		7		8	9
19	Tippera...	Pargana Meharkul, mauza Dharmapur.	At mile No. 95.	West of Railway line.	6 6 2	2 0 13·5	.....	.....	Lot Nos. 19 to 26	(1) *North*—Comilla station yard. *South*—Level cross in Comilla station yard. *East*—Comilla Railway station. *West*—Mauza Dharmapur or District Board road.
20	Ditto ...	Ditto ...	Ditto	Ditto	1 2 13	0 1 20·2	.....	.....	Ditto ...	(2) *North*—Comilla station yard. *South*—District Board road. *East*— } Relinquished land. *West*— }
21	Ditto .	Pargana ditto, mauza Badarpur.	At mile No. 97.	North of Railway line.	7 19 9	2 2 21·9	... ..	.....	Ditto ...	(3) *North*—District Board road or embankment of Gumti river. *South*—Golapkha, Kadirbaksh and mauza Badarpur. *East*—Homestead land and cultivated land of Golapkha and Kadirbaksh. *West*—Railway line.
22	Ditto ...	Pargana Lauhagar, mauza Ram Chandrapur.	At mile No. 110.	Ditto	23 6 10	7 2 34·1	.....	.....	Ditto ...	(4) *North*— } Ramchandrapur. *South*— } *East*—Railway line. *West*—Ramchandrapur.
23	Ditto ...	Ditto ...	Ditto	Ditto	18 1 2	5 3 35·1	... ..	.....	Ditto ...	(5) *North*— } *South*— } Ramchandrapur. *East*— } *West*—Railway line.
24	Ditto ...	Pargana Homnabad, mauza Kakaia.	At mile No. 5.	East of Railway line.	94 5 10	31 0 26·7	... ..	.....	Ditto ...	(6) *North*—Mauza Kakaia. *South*—Railway line. *East*—Mauza Kakaia. *West*—Kurjan khal.
25	Ditto ..	Pargana Nuunagar, mauza Nakhora.	At mile No. 114.	South of Railway line.	1 11 4	0 2 2·5	.. ..	.....	Ditto ...	(7) *North*—Nakhora and Railway line. *South*—Nakhora. *East*—Railway line. *West*—Nakhora.
26	Ditto ...	Pargana Lauhagar, mauza Pachara.	At mile No. 105.	Noth of Railway line.	1 1 11	0 1 17·25	.....	.....	Ditto ...	(8) *North*—Azad Gani. *South*—Bank of tank. *East*—Nabab Ali. *West*—District Board road.

Comilla, the 12th August 1902.

H. W. P. SCHOOPE, Collector.

Statement of the Affairs of the Bank of Bengal for the week ending 19th August 1902.

LIABILITIES.

	Rs.	A.	P.
Capital paid up	2,00,00,000	0	0
Reserve Fund	1,14,00,000	0	0
Public Deposits at Head Office ... ... Rs 66,24,462 15 4	1,85,10,274	10	2
Ditto ditto at Branches „ 1,18,85,811 10 10			
Other Deposits at Head Office and Branches ...	8,42,47,045	9	11
Bank Post Bills, &c.	3,47,024	14	8
Sundries	13,70,596	4	1
Rupees ...	13,58,74,941	6	10

ASSETS.

	Rs	A	P.
Government securities	1,48 47,490	0	0
Other authorised investments	67,92,370	0	0,
Loans on Government and other authorised securities	2,56,18,504	5	9
Accounts of credit on ditto ditto	1,49,65,037	1	6
Bills discounted and purchased	1,58,61,979	6	9
Balances with other Banks	18,02,316	3	6
Bullion	12,592	9	8
Dead Stock	16,02,336	11	1
Stamps	12,481	7	6
Sundries	8,46,874	14	10
	8,53,51,982	12	9
Cash & Currency Notes at Head Office* ... Rs. 2,62,35,915 12 5			
Cash & Currency Notes at Branches† ... „ 2,42,87,042 13 8	5,05,22,958	10	1
Rupees ...	13,58,74,941	6	10

* Includes Sovs. and ½ Sovs., value Rs. 1,38,975 0 0
† Do. do. do. „ 1,85,460 0 0
Rs. 3,24,435 0 0

By order of the Directors,
W. D. CRUICKSHANK,
Secretary and Treasurer.

BANK OF BENGAL,
Calcutta, the 21st August 1902.

E. J. BIRCH, Chief Accountant.
Rate for Demand Loans 3 per cent.
Percentage 48·35.

(588—1)

In the 2nd Court of Subordinate Judge of Shahabad.

EXECUTION CASE No. 89 OF 1902.

Sheo Golam Sahu and Thakur Chand Sahu, sons of Bhikari Sahu, resident of Nasriganj, pargana Sassaram, decree-holders, *versus* Raja Raj Rajesari Pershad Singh, son of Babu Ram Kumar Singh, resident of mauza Soorajpara, pargana Danwar, district Shahabad, judgment-debtor.

THE following properties of the judgment-debtor will be sold by the Nazir of the District Judge at noon on the 3rd November 1902 in the sale-shed of the Civil Court, Arrah, for realization of Rs. 1,358 7-6:—

No. of lot.	Name of mauza with pargana.	Extent of share.	Tauzi No.	Jama sadar.	Name of thana.	Name of sub-registry office.	Approximate value given by decree-holder.
		As. P.		Rs. A. P.			Rs.
1	Mauza Dhobdiha, pargana Sassaram.	5 4	2538	1,137 1 1	Dehri ...	Sassaram ...	500
2	Mauza Sohia, pargana Behia.	5 4	418 1211	2,661 0 0	Shahpore ...	Jugdispore	500

GOBIND CHUNDER DE, Offg. Subordinate Judge, 2nd Court, Arrah.

Arrah, the 20th August 1902.

(590—1)

Pure Sulphate of Quinine.

MANUFACTURED AT THE BENGAL GOVERNMENT CINCHONA PLANTATION.

FROM 1st April 1902 the price of this quinine will be as follows:—

1	Pound tin	Rs. 17,	or, post free,	Rs. 17-8			
½	,,	,,	,,	8-8	,,	,,	8-14.
¼	,,	,,	,,	4-4	,,	,,	4-10

Analysis shows this quinine to be of the purest manufacture; and it is guaranteed to be free from wilful mixture with the inferior alkaloids, cinchonine and cinchonidine. It is for sale only to Government officers, and only for cash, and may be had from the Superintendent, Botanic Garden, Sibpur, near Calcutta.

Cinchona Febrifuge.

Cinchona Febrifuge can be purchased by all Government officers and by any one taking *six pounds* and upwards at a time from the Superintendent, Botanic Garden, Calcutta, for cash only at the following rates—

	Government officers.	General public.	Postage extra.
	Rs. A.	Rs.	As.
1 Pound tin ...	10 0	12	8
½ ,, ,, ...	5 0	6	6
¼ ,, ,, ...	2 8	3	4

MADHAVA CHANDRA CHATTERJEE, Government Pleader of Dinajpur, intends to be enrolled as a Vakeel of the High Court.

(457—4—997)

BABU NAGENDRA NATH MITRA, B.A., B.L., intends to enrol himself as a Vakil of the High Court, Bengal.

(546—4 - 101

WANTED a Treasurer for the Khulna Treasury. Salary Rs 80 per month. Applications will be received by the undersigned up to the 31st August 1902. The selected candidate will have to furnish security of Rs. 15,0 0 in Government Promissory Notes. None need apply who has had no experience of Treasury work.

S. C MUKERJEE, Collector.

Khulna Collectorate, the 14th August 1902.

WANTED an Overseer for the Deoghur Municipality on Rs. 50 per month, including allowances.

None need apply who is not qualified under the rules and does not possess good health.

Applications will be received up to 15th September 1902.

GIRIS CHANDRA NAG,

Vice-Chairman, Deoghur Municipality.

Deoghur, the 19th August 1902. (583—2)

Notice.

WANTED at once a Sub-Inspector of Schools on a salary of Rs. 60 and travelling allowance admissible under the rules of the Civil Service Regulations, subject to maximum of Rs. 25 a month, and six Inspecting Pandits on a salary of Rs. 20 *plus* consolidated allowance of Rs. 10 a month each. Candidates for the Sub-Inspectorships must be qualified under the rules published under Bengal Government Notifications No 486T.G., dated 2nd September 1893, and No. 105T.G., dated 24th May 1899, and must submit with the applications all the necessary certificates. Candidates for the posts of Inspecting Pandits must be ex-students of first grade training schools and must know English. They must be below 25 years of age and must produce certificates of health and good moral character. Qualified Muhammadan candidates will have preference. Applications with copies of testimonials will be received by the undersigned up to the 7th proximo.

W. N. DELEVINGNE, Chairman.

Jessore District Board, the 18th August 1902. (582—2)

Notice.

WANTED a Tax-Daroga for the Ranchi Municipality on Rs. 25 with a commission of 2 annas for every distress warrant personally executed by the Tax-Daroga.

Applications with copies of testimonials will be received by the undersigned till 10th September 1902. Candidates possessing official experience will be preferred.

He should furnish security for Rs. 200 in cash or Post Office pass-book.

SARODA KUMAR AIKATH,

Vice-Chairman, Ranchi Municipality.

Ranchi Municipal Office, the 18th August 1902.

(584—2)

Notice.

WANTED an experienced Overseer for the District Board, Hooghly. Pay Rs. 60 to Rs. 80 by biennial increment of Rs. 4 *plus* horse allowance of Rs. 30. Candidates must possess qualification under rule 7 (1) of the Government Notification No. 3334L S.-G., dated 20th December 1901 Applications with copies of testimonials will be received by the undersigned up to 10th September 1902. Selected candidate will have to join at once.

M. N. BAGCHI,

District Engineer, Hooghly.

Chinsurah, the 19th August 1902. (591—2)

Notice.

THE Government of Bengal, on the recommendation of the Port Commissioners, have sanctioned, under section 38 of the Port Commissioners' Act, IV (B C.) of 1887, the levy of a charge of Rs. 3 per diem for the use of each wire hawser and shackle supplied to vessels for mooring purposes.

R. S. GREENSHIELDS,

Chairman of the Port Commissioners.

Chittagong, the 21st August 1902. (592—3)

Notice.

SEALED TENDERS for the conveyance of import, export and other Government stores, and for labour and the hire of boats for two periods—one of 1 year 8 months, from 1st January 1903 to 31st March 1904, and one for 3 years 3 months, from 1st January 1903 to 31st March 1906—will be received by the Agent for Government Consignments, Calcutta, up to noon on Friday, the 3rd October 1902.

Tenders should be superscribed "Tender for carrying contract for one year and three months" and "three years and three months" as the case may be.

Tenders must be prepared on forms to be obtained with full particulars from the undersigned on payment of one rupee for each form.

No tender will be received except on the prescribed form, and no additions or alterations must be made on the tender form.

Tenders must be supported by a Bank of Bengal or Treasury receipt for Rs. 700 as earnest-money. The earnest-money to be forfeited in the event of a tender withdrawn No tender will be received without a deposit of this earnest-money.

Tenders will be opened at noon on Friday, October 3rd, 1902, at No. 5 Strand Road, in the presence of tenderers by the undersigned, who does not bind himself to accept the lowest or any tender.

H. J. PATERSON, LIEUT., R.N.R.,

Offg. Agent for Govt. Consignments.

Calcutta, the 25th July 1902.

Notification.

TO be peremptorily sold by the Registrar of the Calcutta High Court, in his sale-room in the Court-house on Saturday, the 30th day of August 1902, at the hour of 12 o'clock, noon, pursuant to a decree and order of the said Court made in suit No. 703 of 1896, wherein Roormull Goenka is plaintiff *versus* Hinga Bibee and others, defendants, and dated, respectively, 5th December 1897 and 12th December 1899, the following properties :—

Lot No. 1.—No. 4, College Square in Calcutta, an upper-roomed brick-built dwelling-house with land whereon the same is built, containing by estimation 6 cottahs 14 chittacks and 28 square feet, more or less, including the southern wall, but without the northern wall, holding No. 2, block No 8, North Division, Calcutta, bounded on the east by the premises No. 2-1, College Square, on the west by the public road called College Square, on the south by premises No. 3, College Square, and on the north by the premises No. 5, College Square, and which property is delineated in the map or plan marked C, annexed to the return of the Commissioner of Partition in suit No. 267 of 1887 of the High Court and therein enclosed within a broad light-red border.

Lot No. 2.—No. 2-1, College Square in Calcutta, being a tenanted land containing by estimation 3 cottahs 9 chittacks and 40 square feet, being a portion of the tenanted land and premises No. 2-1, College Square, in the town of Calcutta, appertaining to the aforesaid block and holding delineated in the map or plan marked B, annexed to the said return, and which portion in the said map or plan B is marked lot B and enclosed within a broad light-red border and which is bounded on the north by another portion of the land appertaining to premises No. 2-1, College Square aforesaid, on the east by a common passage mentioned in the said plan, on the south by land formed by filling up of the tank of Chintamoney Dass and others, and west by the house and premises No. 4, College Square aforesaid.

Lot No. 3.—All that piece or parcel of tenanted land, containing by estimation 3 bighas 16 cottahs 14 chittaks and one square foot, being a portion of the tenanted land and premises No. 5, Bibee's Bagan Road in Entally, being holding No. 77, subdivision H, Division 4, dihi Panchannogram, registration sub-district Sealdah, district 24 Parganas, thana Entally, and which portion is marked lot C and enclosed within a broad light red border in the map or plan marked D, annexed to the said return, and which is bounded on the north by Chinribatta Road, on the east by municipal drain, on the south by the remaining portion of the said tenanted land, and on the west by Bibee's Bagan Road.

The abstract of title and conditions of sale may be seen at the office of the Registrar, High Court, Original Side, and at the office of Babu Gour Hari Mookerjee, the plaintiff's attorney at any time before the sale and will be produced at the sale.

W. R, FINK, Registrar.

Gour Hari Mookerjee, Attorney for the plaintiff.

Calcutta High Court, Original Side, the 17th day of July 1902.

(453—1—1000)

Supply and Transport Notice No. 4.

Dated 31st July 1902.

THE Storekeeper-General, Supply and Transport, Balooghat, Calcutta, will receive offers by letters up to 12 noon on the 20th August 1902 for supply of 14,760 lbs. Dubbing and 1,850 lbs Soft Soap during 1902-1903 in the Bengal Command, deliverable in four quarterly instalments, at his Store Depôt or any Headquarter station of a Chief Supply and Transport Officer and subject to his approval and according to the samples of this Corps.

2. The successful Tenderer will have to sign a sample agreement in $\frac{\text{S and T Form}}{\text{F. 45}}$, which form and any further particulars can be obtained on application to the above Officer.

Notice.

WANTED a Statistical Clerk for the Office of the Director of Land Records and Agriculture, Bengal. Pay Rs. 45 rising by biennial increments of Rs. 5 to Rs. 65 on approved work.

None need apply who has not passed the B.A. examination in the "B" Course and is not strong in Mathematics.

The selected candidate will have to stick to the appointment for at least five years.

Applications with copies of testimonials should reach the undersigned by the 10th September 1902.

C. G H. ALLEN, Offg. Director of the Department of Land Records and Agriculture, Bengal.

Writers' Buildings, Calcutta, the 25th August 1902.

Notice.

List of unclaimed goods lying in the Custom House Wharf.

Vessels.	Marks and Nos.	Description of packages.	REMARKS.
S.S. "Orissa" ...	M M & Co ...	1 Case ...	Unknown.
" "Islanda" ...	P R, bottom A or Nil.	2 Bundles coir yarn.	
" "India" ...	W M H or Nil ...	2 Casks ...	Unknown.
" "Henzada"	G. Morrison & Co., 4, Hastings Street.	1 Crate ...	"
" "Kerbella"...	C D J ...	1 Bag cowries.	
" "Okhla" ...	M A	4 Casks cocoanut-oil.	
" "Scindia" ...	M V in diamond, Port Elizabeth.	1 Bale coir fibre.	
" "Umquizi"	Nil	1 Bag salt fish.	
" "Cholydra"	202 top, S.S. in block.	1 Case	Unknown.
" "Kumsang"	Nil	1 Basket earthenware.	Broken.
" "Suisang" ...	Nil	1 Box empty bottles.	"
" "Kumsang"	S or Nil	1 Case empty bottles.	
" "Sunda" ...	A. S. Constantide	1 Chair	Cane.
" "A. Apcar"...	C. T. Dept.	1 "	
" "Goorkha"...	M. L. Westmacott	1 Trunk	Unknown.
" "Massilia" ...	Nil	1 Bath tub ...	Zinc.
" " ...	Cantn. Wood ...	1 Chair	Deck.
" " ...	Nil	1 "	"
" "Candia" ...	Stables	1 "	"
" "Malta" ...	H. Bamber ...	1 "	"
" " ...	H. Bridge ..	1 "	"
" " ...	L. Hicks ...	1 "	"
" " ...	Oliver ...	1 "	"
" " ...	H L R ..	1 "	"
" " ...	C. H. Stewart ...	1 "	"
" " ...	Nil ...	1 "	"
" " ...	Nil ...	1 "	"
" " ...	C. F. Gordon ...	1 "	"
" "E. F. Ferdinand."	H. Bonckel ...	1 "	"
" "	A. Voigt ...	2 Chairs	Cane.
" "Matiana" ...	Mrs Elkington ..	1 Case	Unknown.
" "Massilia" ...	Bell	1 Bundle, 4 chairs.	
" "Pentakotta"	C. H. Elliott ...	1 Gun.	
" "	W. Wright ...	1 "	
" "Umta" ...	Hary Ram Sing ...	1 Sword.	
" "Madura" ...	Dr. Graham ...	1 Revolver.	
" "Workman"	A in diamond, top GA, bottom & Co., No. 3.	1 Case Revolver.	
" "	717 in inverted triangle, bottom M & Co., Nos. 9-3-4.	2 Cases Gun.	
" "Obra" ...	F in diamond ...	1 case dry fruits	Broken.
" "Elcora" ..	C G W ...	4 bundles wood.	
" " ...	N B ...	1 bundle chillies.	
" "Kumsang"	M M G in diamond	1 bag betel-nuts.	
" "Suisang" ...	M M G ...	1 " "	
" " ...	M M G ...	6 bags sago flour.	

The above will be sold if not cleared on or before the 5th September 1902.

L. F. MORSHEAD, Collector of Customs.

Calcutta, Custom House, the 19th August 1902.

Destroyed by white-ants

THE Government Promissory Note No. 066104 of the 3½ per cent. of 1842-43 for Rs. 100, originally standing in the name of Prosad Dass Bural and last endorsed to Srimutty Modon Mohini Dassee, the proprietress, by whom it was never endorsed to any other person. Payment of the above note and the interest thereupon have been stopped at the Public Debt Office, Bank of Bengal, and application is about to be made for the issue of duplicate in favour of the said proprietress.

GANES CHANDRA DE, Attorney for Sm. MOOND MOHINI DASSEE.

Calcutta, 1st August 1902. (493—3 -1005)

NOTICE.

In the 2nd Court of the Subordinate Judge, Bhagalpur.

MONEY EXECUTION CASE No. 30 OF 1902.

Harchand Ray Marwari, Anant Ram Marwari and Gobardhan Ram Marwari, of Sujaganj, in the town of Bhagalpur, decree holders, *versus* Babu Seri Mohan Thacoor, Narsing Mohan Thacoor, Kesor Mohan Thacoor and Bhuban Mohan Thacoor, of Kusba Barari, in the town of Bhagalpur, judgment-debtors.

TO be sold in the above case by the Nazir of the District Judge's Court, Bhagalpur, at 12 A M. on the 15th September 1902, the properties detailed below for realization of the judgment-debt, amounting to Rs. 34,450-9 :—

Schedule of properties to be sold.

I.—Eight annas out of 16 annas of kismat Aol (first) Gobrai, pargana Bhagalpur, asli and dakhli, No. 50 tauzi and Rs. 2,757-11 sadar jama, within thana Amarpur, sub-registrar Banka; approximate value given by decree-holder is Rs. 1,000.

II.—Eight annas out of 16 annas of taluqa Barari pargana Colgong, asli and dakhli, No. 265 tauzi and Rs. 509-3 sadar jama, within thana Kotwali, sub-registrar Bhagalpur; approximate value given by decree-holder is Rs 1,000.

III.—Eight annas out of 16 annas of taluqa Tulsipur, pargana Chai, asli and dakhli, No. 350 tauzi and sadar jama Rs. 421-3, within thana Bihpur and sub-registrar Bihpur; approximate value given by decree-holder is Rs. 1,000.

MATI LAL HALDAR, Subordinate Judge, 2nd Court.

Bhagalpur, the 22nd August 1902. (594—1)

In the Second Court of the Subordinate Judge, 24-Parganas.

PRESENT:

Babu Bhugobutty Churn Mitter.

EXECUTION CASE No. 121 OF 1902.

Debendra Lal Pal Choudhry and others, decree-holders *versus* Bissumbher Moitra and another, judgment-debtors.

WILL be sold by public auction on the 8th day of September 1902 in the Court-house at Alipore by the Nazir of the Court for the realisation of Rs. 5,114 and odd due to the decree-holders, the following mortgaged property of the judgment-debtors :—

Schedule of property.

53 bighas and odd land with trees, tanks, and katchery house thereon situated within thana Ultadinghi, known as *Mooroolsebagan*, mauza Ultadinghi, holdings Nos. 127-128, division 2, subdivision 10, dihi Panchannogram, for which Rs. 53 and odd is payable annually to the 24-Parganas Collectorate.

BHUGOBUTTY CHURN MITTER, Sub-Judge.

Alipore, the 25th August 1902. (598—1)

INSOLVENT NOTICES.

In the Court for the Relief of Insolvent Debtors at Calcutta.

In the matter of RAM TAHAL RAM KAHAR, an insolvent.

On Wednesday, the 30th day of July last, it was ordered that the matters of the petition of the said insolvent be heard on Tuesday, the 25th day of November next, and that the said insolvent do then attend to be examined before the said Court.

S. C. Mitter, Attorney. (547—2)

In the matter of BEPIN BEHARY BOSE, an insolvent.

On Saturday, the 26th day of July last, it was ordered that the matters of the petition of the said insolvent be heard on Tuesday, the 25th day of November next, and that the said insolvent do then attend to be examined before the said Court.

Khogendra Nath De, Attorney. (548—2)

In the matter of SHAM LALL CHANDER, an insolvent.

On Wednesday, the 30th day of July last, it was ordered that the matters of the petition of the said insolvent be heard on Tuesday, the 2nd day of September next, and that the said insolvent do then attend to be examined before the said Court.

Manik Lall Seal, Attorney. (549—2)

In the matter of NITTYO GOPAUL DUTT, HURRY DASS DUTT, and TULSI CHARN DUTT, insolvents.

On Friday, the 18th day of July last, it was ordered that the matters of the petition of the said insolvents be heard on Tuesday, the 2nd day of September next, and that the said insolvents do then attend to be examined before the said Court.

Aukshay Kumar Mitter, Attorney. (550—2)

In the matter of ROBERT WILLIAM HENDERSON, an insolvent.

On Friday, the 18th day of July last, it was ordered that the matters of the petition of the said insolvent be heard on Tuesday, the 2nd day of September next, and that the said insolvent do then attend to be examined before the said Court.

Insolvent in person. (551—2)

In the matter of CLAUD CHARLES AUGIER, an insolvent.

On Friday, the 25th day of July last, it was ordered that the matters of the petition of the said insolvent be heard on Tuesday, the 2nd day of September next, and that the said insolvent do then attend to be examined before the said Court.

Insolvent in person. (552—2)

In the matter of JAMES GEORGE JEFFERSON, an insolvent.

On Saturday, the 2nd day of August instant, it was ordered that the matters of the petition of the said insolvent be heard on Tuesday, the 25th day of November next, and that the said insolvent do then attend to be examined before the said Court.

G. K. Ghose, Attorney. (553—2)

In the matter of THOMAS WATSON, an insolvent.

On Saturday, the 2nd day of August instant, it was ordered that the matters of the petition of the said insolvent be heard on Tuesday, the 25th day of November next, and that the said insolvent do then attend to be examined before the said Court.

Orr, Robertson, and Burton, Attorneys. (554—2)

In the matter of BHAGWAN DASS and MOHADEO, insolvents.

On Monday, the 4th day of August instant, it was ordered that the matters of the petition of the said insolvents be heard on Tuesday, the 25th day of November next, and that the said insolvents do then attend to be examined before the said Court.

Kali Mohun Rakshit, Attorney. (555—2)

GOVERNMENT PUBLICATIONS FOR SALE

At the Bengal Secretariat Book Depôt, Writers' Buildings, Calcutta, and by the following Agents :—

AGENTS IN INDIA.

Messrs. Thacker, Spink & Co., Calcutta and Simla.
Messrs. Newman & Co., Calcutta.
Messrs. Higginbotham & Co., Madras.
Messrs. Thacker & Co., Ld., Bombay.
Messrs. A. J. Combridge & Co., Bombay.
Mr. E. Seymour Hale, 53 Esplanade Road, Fort, Bombay, and Calcutta.
The Superintendent, American Baptist Mission Press, Rangoon.
Messrs. S. K. Lahiri & Co., Printers and Booksellers, College Street, Calcutta.
Rai Sahib M. Gulab Singh & Sons, Proprietors of the Mufid-i-am Press, Lahore, Punjab.
Messrs. V. Kalyanarama Iyer & Co., Booksellers, &c., Madras.
Messrs. D. B. Taraporevala Sons & Co., Booksellers, Bombay.

AGENTS IN ENGLAND.

Mr. E. A. Arnold, 37 Bedford Street, Strand, London.
Messrs. Constable & Co., 2 Whitehall Gardens, London.
Messrs. Sampson Low, Marston & Co., St. Dunstan's House, Fetter Lane, London.
Messrs. Luzac & Co., 46 Great Russell Street, London.
Messrs. Kegan Paul, Trench, Trübner & Co., Charing Cross Road, London.
Mr. B. Alfred Quaritch, 15 Piccadilly, London.
Messrs. P. S. King & Son, 2 & 4 Great Smith Street, Westminster, London.
Messrs. H. S. King & Co., 65 Cornhill, London.
Messrs. Williams and Norgate, Oxford.
Messrs. Deighton Bell & Co., Cambridge.

AGENTS ON THE CONTINENT.

Messrs R. Friedländer & Sohn, Berlin, N. W. Carlstrasse, 11.
Mr. Otto Harrassowitz, Leipzig.
Mr. Karl Hiersemann, Leipzig.
Mr. Ernest Leroux, 28 Rue Bonaparte, Paris.
Mr. Martinus Nijhoff, The Hague.

NOTICE.—Books required for private use can be purchased. Applications should be accompanied by a remittance in each case.

All remittances on account of subscriptions to, or prices of, Gazettes, Indian Law Reports or other Government publications available for sale at the Bengal Secretariat Book Depôt, or for cost of advertisements published in the Gazettes should, in future, be made payable to the "Treasurer, Bengal Secretariat, Calcutta." Advices of such remittances, if separately sent, should be addressed to the "Accountant, Bengal Secretariat." All advertisements intended for publication in the *Calcutta* or *Bengali Gazette* should be sent direct to the Superintendent, Government Printing, Bengal.

Books required for the Public Service should be obtained through the Heads of Departments.

☞ *The amounts within parentheses are for packing and postage.*

NEW PUBLICATIONS ISSUED DURING THE CURRENT QUARTER.

APPOINTMENT DEPARTMENT.

Quarterly Civil List of Bengal, corrected up to 1st July 1902. Super-Royal 8vo. Paper cover. Rs. 3. (4*a.*)

GENERAL DEPARTMENT.

Report of Emigration from the Port of Calcutta to British and Foreign Colonies, 1901. By the Protector of Emigrants, Calcutta. F'cap. Paper cover. 12*a.* (1*a.*)
Civil Engineering College, Sibpur, Calendar for 1902. Royal 8vo. Paper cover. 12*a.* (2*a.*)
Annual Report on Inland Emigration for the year 1901. F'cap. Paper cover. 8*a.* (1*a.*)
Annual Report on the Reformatory Schools at Alipore and Hazaribagh for the year 1901. F'cap. Paper cover. 4*a.* (1*a.*)

JUDICIAL DEPARTMENT.

Annual Report on the Police Administration of the Town of Calcutta and its Suburbs for the year 1901. F'cap. Paper cover. Re. 1. (1*a.*)

LEGISLATIVE DEPARTMENT.

The Bengal Vaccination Act, 1880 (Bengal Act V of 1880), as modified up to 1st June 1902. Royal 8vo. Paper cover. Price 4*a.* (1*a.*)
The Salt Act, 1864 (Bengal Act VII of 1864), as modified up to 1st July 1902, with an appendix showing the extent to which the Indian Salt Act, 1882, is in force in Bengal. Royal 8vo. Paper cover. 3*a.* (1*a.*)

MUNICIPAL DEPARTMENT.

Triennial Report on the working of the Charitable Dispensaries under the Government of Bengal and the Calcutta Medical Institutions for the years 1899, 1900 and 1901. F'cap. Paper cover. Rs. 5. 8*a.*)
Thirty-fourth Annual Report of the Sanitary Commissioner for Bengal for the year 1901. F'cap. Board. Paper cover. Re. 1-12, (3*a.*)
Fifth Triennial Report of Vaccination in Bengal during the years 1899-1900, 1900-1901, and 1901-1902 F'cap. Paper cover. Re. 1. (1*a.*)

POLITICAL DEPARTMENT.

Administration Report on the Jails of Bengal for the year 1901. F'cap. Board. Paper cover. Rs. 3. (3*a.*),

PUBLIC WORKS DEPARTMENT.

Electric Traction.—Six lectures delivered in March 1902 at the Civil Engineering College, Sibpur, by J. W. Meares, Esq., Electrical Engineer to the Government of Bengal. Royal, 8vo. Full cloth. Re. 1-8. (2*a.*)

Classified List and Distribution Return of Establishment of the Public Works Department, Bengal, corrected up to 30th June 1902. Super-Royal 8vo. Paper cover. 4*a.* (1*a.*)

A Manual for the guidance of the staff of the Revenue Division of the Sone Canals. By H. TOUGOOD, Esq., Superintending Engineer, Sone Circle. Royal 8vo. Board. Paper cover. Re. 1. (2*a.*)

REVENUE DEPARTMENT.

Season and Crop Report of Bengal for the year 1901-1902. F'cap. Paper cover. 8*a.* (1*a.*)

The Sale Law Manual, a Manual of the Revenue and the Patni Sale Laws with Notes and the rules, &c., under them. Royal 8vo. Board. Paper cover. Re. 1-4. (3*a.*)

Price-list of staple food-crops in the local areas of Bengal, for the period from 1st January to 31st March 1901. F'cap. Board. Paper cover. Re. 1. (2*a.*)

Rules for the keeping and inspection of accounts of collections in Government and Wards' Estates. Published under the authority of the Board of Revenue, L. P. Royal 8vo. Board. Paper cover. As. 8. (1*a.*)

The Government Estates' Manual, 1902. Royal 8vo. Board. Paper cover. Re. 1. (3*a.*)

PUBLICATIONS ISSUED BETWEEN THE 1ST JANUARY AND THE 30TH JUNE 1902.

APPOINTMENT DEPARTMENT.

Quarterly Civil List of Bengal corrected up to 1st April 1902. Super-royal 8vo. Paper cover. Price Rs. 3. (4*a.*)

FINANCIAL DEPARTMENT.

The Stamp Manual, 1902. A Manual for the guidance of officers in the administration of the Stamp Department. Royal 8vo. Board. Paper cover. Price Re. 1-8.. (6*a.*)

Annual Report on the consumption of Stationery in Bengal during 1900-1901. F'cap. Paper cover. Rs. 3. (2*a.*)

GENERAL DEPARTMENT.

List of Officers in the Subordinate Educational Service, Bengal, corrected up to 1st April 1902. F'cap. Paper cover. 8*a.* (1*a.*)

JUDICIAL DEPARTMENT.

Question Papers set at the Pleadership and Muktearship Examinations for the year 1902. Royal 8vo. Paper cover. Price 2*a.* (1*a.*)

Question Papers set at the Examination of candidates for appointment as Sub-Inspectors of Police. July and November 1901. Royal 8vo. Paper cover. Price 5*a.* (1*a.*)

Question Papers set at the Examination of candidates for recruiting the staff of Superior Police Officers in Bengal and Assam, held in November 1901. Royal 8vo. Paper cover. Price 8*a.* (1*a.*)

LEGISLATIVE DEPARTMENT.

The Court of Wards' Act, 1879 (Bengal Act IX of 1879), in Hindi, as modified up to the 1st July 1901. Royal 8vo. Paper cover. Price 6*a* (1*a.*)

The Calcutta Port Act, 1890 (Bengal Act III of 1890), as modified up to 1st April 1902. Royal 8vo. Paper cover. Price 10*a.* (1*a.*)

MUNICIPAL DEPARTMENT.

Annual Returns of the Lunatic Asylums in Bengal with brief notes for the year 1901. Compiled by the Inspector-General of Civil Hospitals. F'cap. Paper cover. Price Re. 1. (2*a.*)

Account Rules under the Local Self-Government Act, Part VIII. F'cap. Paper cover. Price 8*a.* (.)

Annual Report of the Chemical Examiner's Department, Bengal, 1901. F'cap. Paper cover Price 8*a.* (2*a.*)

PUBLIC WORKS DEPARTMENT

Distribution Return of Officers and Subordinates employed on Local Works in Bengal, corrected up to 31st December 1901. Super-royal 8vo Paper cover Price 2*a.* (1*a.*)

Embankment and Drainage Report of the Government of Bengal, Irrigation Department, for the year 1900-1901. F'cap. Boards Paper cover. Price Re. 2 (3*a.*)

Classified List and Distribution Return of Establishment corrected up to 31st March 1902. Super-royal 8vo. Paper cover. Price 4*a.* (1*a.*)

Dacca Electric Lighting License, 1902. F'cap. Paper cover. Price 14*a.* (1*a.*)

Notes on the construction of Railways in India (for students) with 5 charts. F'cap. Paper cover. Price Re. 1. (1*a.*)

REVENUE DEPARTMENT.

Annual Report of the Burdwan Experimental Farm for the year 1900-1901. F'cap. Paper cover. Price 3*a.* (1*a.*)

Annual Report on the Survey Operations in Bengal during the year 1900-1901 (from 1st October 1900 to 30th September 1901) F'cap. Paper cover. Price Re. 1-8. (2*a.*)

Annual Report of the Director of the Department of Land Records, Bengal, on Settlements, for the year ending 30th September 1901. F'cap. Paper cover. Price 8*a.* (1*a.*)

The Practice and Procedure Manual, published under the authority of the Board of Revenue. Royal 8vo. Board. Paper cover. Price 12*a.* (3*a.*).

OLDER PUBLICATIONS.

A General Catalogue of all Government Publications (corrected up to 31st December, 1901) may be obtained *gratis* on application to the Officer in charge, Bengal Secretariat Book Depôt.

Publications for sale at the office of the Chief Inspector of Explosives with the Government of India.

Rules for the manufacture, possession and sale of explosives issued by each of the Local Governments and Administrations. Price 12*a*.

Rules for the transport and importation of explosives issued by the Government of India. Price 12*a*.

Rules for the transport and importation of explosives at the Port of Calcutta. Price 4*a*.

GOVERNMENT PUBLICATIONS FOR SALE

BY THE SUPERINTENDENT OF GOVERNMENT PRINTING, INDIA, 8 HASTINGS STREET, CALCUTTA.

[A General Catalogue of all Government Publications may be obtained gratis from the Government Central Press, Calcutta.]

All books published by the Superintendent of Government Printing, India, can be purchased, either directly or through the following or any other booksellers:—

AGENTS IN INDIA.

Messrs. Thacker, Spink & Co., Calcutta and Simla.
Messrs. Newman & Co., Calcutta.
Messrs. Higginbotham & Co., Madras.
Messrs. Thacker & Co., Ld., Bombay.
Messrs. A. J. Combridge & Co., Bombay.
Messrs. V. Kalyanarama Iyer & Co., Madras.
Messrs. D. B. Taraporevala, Sons & Co Bombay.
Superintendent, American Baptist Mission Press, Rangoon.
Rai Sahib M. Gulab Singh and Sons, Mufid-I-Am Press, Lahore.
Manager, Educational Book Depôts, Nagpur and Jubbulpore.*
Manager of the Imperial Book Depôt, 63 Chandni Chauk Street, Delhi.*
Manager, "East Coast News," Vizagapatam.*
Manager, "The Agra Medical Hall and Co-operative Association, Limited" (Successors to A. John & Co.), Agra.*
Mr. T. K. Sectharama Aiyar, Kumbakonam.*
Lala Debi Prasad, Vakil and Manager of Law Press, Cawnpore.*

AGENTS IN EUROPE.

Mr. E. A. Arnold, 37 Bedford Street, Strand, London.
Messrs. Constable & Co., 2 Whitehall Gardens, London.
Messrs. Sampson Low, Marston & Co., St. Dunstan's House, Fetter Lane, London.
Messrs. Luzac & Co., 46 Great Russel Street, London.
Messrs. Kegan Paul, Trench, Trübner & Co., Charing Cross Road, London.
Mr. B. Alfred Quaritch, 15 Piccadilly, London.
Messrs. P. S. King and Son, 2 & 4 Great Smith Street, Westminster.
Messrs. H. S. King & Co., 65 Cornhill, London, are also Agents for the sale of the Indian Army List.
Mr. Otto Harrassowitz, Mr. Karl Hiersemann } Leipzig.
Messrs. R. Friedlander & Sohn, Berlin, N. W. Carlstrasse, 11.
Mr. Ernest Leroux, 28 Rue Bonaparte, Paris.
Mr. Martinus Nijhoff, the Hague, Holland.
Messrs. Williams and Norgate, Oxford.
Messrs. Deighton Bell & Co., Cambridge.

* Agents for sale of the Legislative Department publications.

NOTICE.—Books and Acts required for private use only can be purchased. Applications should be accompanied by a remittance, unless it is wished that the books should be sent by value-payable post, in which case, besides the ordinary postage, an additional charge is made for registration and commission.

Books and Acts required for the public service should be obtained through Local Governments to whom the applicant is subordinate.

Applications for Government publications which are no longer in print should be made to the Agents of the particular Government under whose orders they were originally issued.

The amounts within parentheses are for packing and postage.

List of New Books published during the Current Quarter.

LEGISLATIVE DEPARTMENT.

List of General rules and orders under Statutes and General Acts in force in British India. Corrected to 31st March 1902. Royal 8vo. Stitched. Re. 1 8*a.* or 2*s.* 3*d.* (3*a.*)
Madras Code. Third Edition, in two Volumes. 1901. Super-Royal 8vo. Cloth. Rs. 6 or 9*s.* (8*a.*) each.
The Indian Lunatic Asylums Act, 1858 (Act XXXVI of 1858), as modified up to 31st May, 1902. 5*a.* 6*p.* or 6*d.* (1*a.*)
The Agriculturists Loans Act, 1884 (Act XII of 1884), as modified up to 15th December, 1896, and with foot-notes brought down to the 1st June, 1902. 2*a.* or 3*d.* (1*a.*)
The Northern Indian Ferries Act, 1878 (Act XVII of 1878), as modified up to 1st June, 1902. 6*a.* or 7*d.* (1*a.*)
The Indian Tariff Act, 1894 (Act VIII of 1894), as modified up to 30th June, 1902. 8*a.* or 9*d.* (1*a.*)

HOME DEPARTMENT.

Report on the Nature of Kala-Azar, by Major Ronald Ross, I.M.S. F'cap. Board. Rs. 2 or 3*s.* (3*a.*)

FINANCE AND COMMERCE DEPARTMENT.

List of Officers in the Finance and Commerce Department. Corrected to 1st May 1902. Royal 8vo. Paper cover. 4*a.* or 5*d.* (1*a.*)
Statistics compiled from the Finance and Revenue Accounts of the Government of India. Receipts and Disbursements of Home and Indian Accounts from 1st April 1892 to 31st March 1900. F'cap. Board. Rs. 2 or 3*s.* (7*a.*)

STATISTICAL DEPARTMENT.

Review of the Trade of India in 1901-1902. F'cap. Paper cover. 8*a.* or 9*d.* (2*a.*)
Statistics of Cotton Spinning and Weaving in the Indian Mills in April 1902, and in the corresponding month of 1900 and 1901. Royal 8vo. Stitched. 2*a.* or 2*d.* (1*a.*)
Accounts of the External Land Trade of British India for the month of April 1902. Royal 8vo. Stitched. 8*a.* or 9*d.* (2*a.*)
Trade and Navigation Accounts of British India for the month of June 1902. No. 3. Royal 8vo. Stitched. 8*a.* or 9*d.* (2*a.*)
Area and yield of certain crops from 1891-1892 to 1901-1902. F'cap. Paper cover. 5*a.* or 6*d.* (3*a.*)

Accounts relating to the Trade carried by Rail and River in India in the quarter and in the twelve months ending March 1902, compared with the corresponding periods of the years 1900 and 1901. No. 4 of 1901-1902. F'cap. Paper cover. 8*a.* or 9*d.* (2*a.*)

MILITARY DEPARTMENT.

List of Light-houses and Light-vessels in British India, including those in the Gulf of Aden a existing at the end of 1901. 21st Issue. Royal 8vo. Board. Re. 1 or 1*s.* 6*d.* (2*a.*)

The Quarterly Indian Army List for July 1902. Royal 8vo. Paper cover. Rs 3 or 4*s.* 6*d.* (2*a.*)

Military Works Services Classified List and istribution Return. Corrected up to 30th June 1902. Royal 8vo. Paper cover 4*a.* or 6*d.* (1*a.*)

General List of Vouchers required to support Credits and Charges in Supply and Transport Cash and Store Accounts. India. Royal 8vo. Paper cover. 10*a.* or 1*s.* (3*a.*)

PUBLIC WORKS DEPARTMENT.

Administration Report on the Railways in India for the calendar year 1901. F'cap. Paper cover. Rs. 2 or 2*s.* 8*d.* (8*a.*)

Public Works Department Classified List and Distribution Return of Establishment. Corrected to 30th June 1902. Super Royal 8vo. Paper cover. Rs. 2 or 3*s.* (4*a.*)

Classified List of the Subordinate Establishment. Corrected to 30th June 1902. Super Royal 8vo. Paper cover. 4*a.* or 5*d* (1*a.*)

REVENUE AND AGRICULTURE DEPARTMENT.

Technical Art Series for 1901. Together with their explanatory text and cover. Nos. I to XII. 4*a.* or 5*d.* (3*a.*) per plate.

List of Books published from January to June 1902.

LEGISLATIVE DEPARTMENT.

Ch ronological Tables of the Indian Statutes compiled, under the orders of the Government of India, by F. G. Wigley, Esq. Royal 8vo. Cloth. *Rs.* 4 or 6*s.* (7*a.*)

The Indian Penal Code (Act XLV of 1860), as modified up to the 1st July 1899, and with foot-notes brought down to 1st April 1901. *Rs.* 2-8 or 3*s.* 9*d.* (6*a.*)

The Indian Factories Act, 1881, as modified up to the 1st April 1891 (with foot-notes brought down to 1st July 1901). 5*a.* 6*p.* or 6*d.* (1*a.* 6*p.*)

Effect of Legislation for 1898, 1899, and 1900. *Re.* 1 or 1*s.* 6*d.* (2*a.*)

Chronological Tables of the Indian Statutes, 1901. *Re.* 1 or 1*s.* 6*d.* (2*a.*)

A Digest of Indian Law Cases, Vol. III. Cloth bound. *Rs.* 12 or 18*s.* (10*a.*)

Ditto ditto ditto. Quarter bound. *Rs.* 13 or 19*s.* 6*d.* (10*a.*)

Act IX of 1901. An Act further to amend the Indian Articles of War. 1*a.* or 1*d.* (1*a.*)

Act X of 1901. An Act further to amend the Court-fees Act, 1870. 1*a.* 3*p* or 1*d.* (1*a.*)

Act XI of 1901. An Act to facilitate the citation of certain Enactments and to amend and repeal certain obsolete Enactments.

Regulation III of 1901. A Regulation further to provide for the suppression of crime in certain frontier districts. 7*a.* 6*p.* or 9*d.* (1*a.* 6*p.*)

Regulation IV of 1901. A Regulation to make better provision for the suppression of murderous outrages in certain frontier tracts. 2*a.* 6*p.* (1*a.*)

Regulation V of 1901. A Regulation further to amend the Upper Burma Land and Revenue Regulation, 1899. 1*a.* 9*p.* or 2*d.* (1*a.*)

Regulation VI of 1901. A Regulation to repeal so much as is unrepealed of the Punjab Frontier Regulation, 1872, and of the Hazara Settlement Rules, 1*a.* or 1*d* (1*a.*)

Regulation VII of 1901. A Regulation to alter certain of the laws in force in the North-West Frontier Province, to declare that certain Enactments are in force therein, and to bar the application of certain others hereto. 11*a.* or 1*s.* 3*d.* (2*a.*)

Corrigendum slip for Act XIII of 1900 1*a.*

Title-page and Contents to Acts of 1901. 1*a.* 6*p* (1*a.*)

Index to Acts of 1901. 2*a.* 9*p.* or 3*d* (1*a.*)

The European Vagrancy Act, 1874 (IX of 1874), as modified up to 1st December, 1901. 6*a.* 6*p.* or 7*d.* (1*a.*)

The Chaukidars Act, 1856 (XX of 1856), as modified up to 1st December, 1901. 7*a.* 6*p.* or 8*d.* (1*a.*)

The Registration of Ships Act, 1841 and 1850 (X of 1841 and XI of 1850), as modified up to 1st December 1893, and with foot-notes brought down to 1st December, 1901. 7*a.* or 7*d.* (1*a.*)

Table showing the effect of Legislation in the Governor-General's Council during 1901. 6*a.* or 6*d.* (1*a.*)

LIST OF TRANSLATIONS AND TRANSLITERATIONS OF ACTS PUBLISHED FROM 1ST OCTOBER 1901 TO 31ST MARCH 1902.

The Cattle-trespass Act, 1871 (I of 1871), as modified up to the 1st April 1901. In Urdu. 2*a.* (1*a.*)

Ditto. In Hindi. 2*a.* (1*a.*)

Act IX of 1901 (an Act further to amend the Indian Articles of War). In Urdu. 3*p.* (1*a.*)

Ditto. In Hindi. 3*p.* 1*a.*

Act X of 1901 (an Act further to amend the Court-fees Act, 1870). In Urdu. 3*p.* (1*a.*)

Ditto. In Hindi. 3*p.* (1*a.*)

HOME DEPARTMENT.

Chronological Tables for 1902, embodying Notifications by the Government of Bengal and Government of India prescribing holidays during the year with corresponding dates in English, Bengali, Velati, Fusli, etc. Royal 8vo. Paper cover. 4*a.* or 4*d.* (1*a.*)

Annual Report of the Sanitary Commissioner with the Government of India, 1900, with Appendices and Returns of Sickness and Mortality among European Troops, Native Troops, and Prisoners in India, for the year. F'cap. Boards. *Rs.* 3 or 4*s.* 6*d.* (8*a.*)

Report of Proceedings of the Central Indigenous Drugs Committee of India, Volume I. Royal 8vo. Board. Rs. 3-8 or 5*s.* 3*d* (7*a.*)

List of Europeans and others in the English Factories in Bengal at the time of the Siege of Calcutta in the year 1756, with an appendix containing lists of European Sufferers. By S. Charles Hill, Esq., B.A., B.SC. Super-Royal 4to. Paper cover. Rs. 2 or 3*s.* (3*a.*)

Judicial and Administrative Statistics for British India. 6th issue, 1900-1901, and preceding years. F'cap. Board. Rs. 2 or 3*s.* (10*a.*)

The Countess of Dufferin's Fund Seventeenth Annual Report of the National Association for Supplying Female Medical Aid to the Women of India for the year 1901. Super-Royal 8vo. Re. 1 or 1*s.* 4*d.* (3*a.*)

DEPARTMENT OF REVENUE AND AGRICULTURE.

List of Officers in the Survey and other Scientific and Minor Departments subordinate to the Government of India in the Department of Revenue and Agriculture, corrected to 1st July 1901. Royal 8vo. Paper cover. 8*a.* or 9*d.* (2*a.*)

Report of the Committee on the Establishment of Co-operative Credit Societies in India. F'cap Paper cover. 4*a.* or 5*d.* (2*a.*)

Forest Flora of the School Circle, North-Western Provinces, being a descriptive list of the indigenous woody plants of the Shaharanpur and Dehra Dun districts and the adjoining portions of the Tehri-Garhwal State in the North-Western Provinces, with Analyses. Double-Crown. 16mo. Full cloth. Re. 1-8 or 2*s.* (3*a.*)

Archæological Exploration in Chinese Turkestan. By Dr. M. A. Stein. Royal 4to. Cloth. Rs. 4 or 6s. (4a.)

Land Revenue Policy of the Indian Government. Royal 8vo. Cloth. 10a. or 1s. (4a.)

FOREIGN DEPARTMENT.

Report on the Administration of the Baluchistan Agency for 1900-1901. Re. 1-8 or 2s. 3d. (8a.)

Report on the Administration of the Hyderabad Assigned Districts for the year 1900-1901. F'cap. Limp cover. Rs. 3-12 or 5s. 6d. (6a.)

Report on the Political Administration of the territories within the Central India Agency for 1900-1901. F'cap. Limp cover. Re. 1-8 or 2s (8a.)

Annotated Returns of the Dispensaries in Central India for 1900. F'cap. Limp cover. Re. 1-8 or 2s. (8a.)

Report on the Administration of the Civil and Military Station of Bangalore for the year 1900-1901. F'cap. Board. 8a. or 9d. (2a.)

Grammar and Vocabulary of Waziri Pashto. By J. G. Lorimer, Esq., I.C.S. Royal 8vo. Board. Rs. 3 or 4s. 6d. (5a.)

FINANCE AND COMMERCE DEPARTMENT.

List of Officers in the Finance and Commerce Department. Corrected to December 1901; to April 1902. 4a. or 5d. (1a.) each.

Papers relating to the proposed Establishment of a Central Bank in India. F'cap. Board. Re. 1 or 1s. 6d. (4a.)

Administration Report of the Mint at Bombay and Calcutta for 1900-1901. F'cap. Paper cover. Re. 1 or 1s. 6d. (2a.)

Schedule IV of the Indian Tariff Act (VIII of 1878) of 1902. Royal 8vo. Stitched. 6a. or 6d. (1a.)

STATISTICAL DEPARTMENT.

Trade and Navigation Accounts of British India for the months of December 1901 to May 1902. Royal 8vo. Stitched. 8a. or 9d. (2a.) each.

Accounts of the External Land Trade of British India for the months of September 1901 to March 1902. Royal 8vo. Stitched. 8a. or 9d. (2a.) each.

Accounts relating to the Trade carried by Rail and River in India in the quarter ending September 1901. Compared with the corresponding periods of the years 1899 and 1900 No. 2 of 1901-1902. F'cap. Paper cover. 8a. or 9d. (2a.)

Ditto ditto ending December 1901. Compared with the corresponding periods of the years 1899 and 1900. No. 3 of 1901-1902. F'cap. Paper cover. 8a. or 9d. (2a.)

Accounts of the Trade of the French Possesions in India in the year ending 31st March 1901, and the four preceding years. F'cap. Paper cover. 2a or 3d. (1a.)

Statistics of Cotton Spinning and Weaving in the Indian Mills in January, February, and March 1902; in the ten months, April 1901 to January 1902; in the eleven months, April 1901 to February 1902, and in the twelve months, April 1901 to March 1902. Compared with the corresponding period of 1899-1900 and 1900-1901. Royal 8vo. Stitched. 2a. or 2d. (1a.) each.

Accounts of the Trade of Aden in the year ending 31st March 1901, and the four preceding years. F'cap. Paper cover. 10a. or 1s. (2a.)

Accounts of the Trade of the Portuguese Possessions in India in the year 1899-1900 and the four preceding years. F'cap. Paper cover. 2a. 3d. (1a.)

Prices and Wages in India. Nineteenth issue, 1902. Super-Royal 4to. Board. Re. 1-8 or 2s (9a.)

COMPTROLLER-GENERAL.

Finance and Revenue Accounts of the Government of India for 1900-1901. F'cap Board. Rs. 2 or 3s. (8a.)

Appropriation Report on the Accounts of the Government of India for 1900-1901. By A. F. Cox, Esq. F'cap. Board. 8a. (5a).

MILITARY DEPARTMENT.

The Monthly Indian Army List for February to March, May, June 1902. Royal 8vo. Paper cover. Re 1-8 or 2s. 3d. (4a.) each.

Return of Wrecks and Casualties in Indian Waters for the year 1900. F'cap. Stiff cover. 12a. or 1s. (8a.)

Military Works Services; Classified List and Distribution Return. Corrected up to 31st December 1901. Royal 8vo. Paper cover. 4a. or 5d. (1a.)

Indian Military Budget Estimate for the year 1902-1903. F'cap. Board. Re. 1-8 or 2s. 3d. (8a.)

PUBLIC WORKS DEPARTMENT.

Public Works Department Classified List and Distribution Return of Establishment. Corrected up to 31st December 1901. Super-Royal 8vo. Paper cover. Rs. 2 or 3s. (4a.)

Classified List (Public Works Department), Subordinate Establishment. Corrected up to 31st December 1901. Super-Royal 8vo. Paper cover. 4a. or 4d. (1a.)

Budget Estimate of the Indo-European Telegraph Department for the year 1902-1903. F'cap. Paper cover. 8a. or 9d. (1a. 6p.)

Budget Estimate of the Indian Telegraph Department for the year 1902-1903. F'cap. Paper cover. 8a. or 9d. (1a. 6p.)

History of Services of the Officers of the Engineer, Accounts, and State Railway Revenue Establishments. Corrected to 31st December 1901. In two Volumes. Royal 8vo. Board. Vol. I, Rs. 2-8 or 3s. 9d. (6a.). Vol. II Rs. 2-8 or 3s. 9d. (6a.) Complete, Rs. 5 or 7s. 6d. (9a.)

List of new books for sale at the Thomason College, Roorkee, which were not advertised before:

Roorkee Treatise on "Railways," 4th Edition, revised by F. Wolley Dod, F.C.H. Price, Rs. 3 per copy.

Roorkee Treatise on "Irrigation Works." By Lieutenant-Colonel J. Clibborn, I.S.C., B.A., L.C.E., C.I.E. Price Rs. 9 per copy.

Roorkee Treatise on "Sanitary Engineering." Compiled by Lieutenant-Colonel J. Clibborn, I.S.C., B.A., L.C.E., C.I.E. Price, Rs. 4-8 per copy.

Roorkee Manual of "Applied Mechanics," Volume II. The stability of structures mostly by graphic methods, by Lieutenant-Colonel J. H. C. Harrison, R.E. Price, Rs. 8-2 per copy.

Roorkee Manual of Hydraulics. Price per copy, Re. 1-4. (No. XIX, Elementary Treatise). By E. F. Tipple, Esq., B.A.

Designs for Wooden Bridges, together with rules for calculating the area of waterway, &c., and Plates. By late Rai Bahadur Kunhya Lal. Price per set, Rs. 4-2.

Pamphlet on Examination for Acid Radicals: Tables giving Analysis of Acids. Price per copy, 8a.

Pamphlet on Examination for Acid Bases: Tables giving Analysis of Metallic Bases. Price, 8a. per copy.

Pamphlet on Note on Masonry Arches (College publication). Price, 4*a* per copy.
Pamphlet on Small Direct Well Pumping Installations. Price, 4*a*. per copy.
Pamphlet on Experiments made on the passage of water through the sand of the Chenab River at the Khanki Weir. By Lieutenant-Colonel J. Clibborn, I S.C, C.A., L C E., C I.E Price per copy, 12*a*
Indian Household Account Book for a period of two years, comprising Daily Table Expense Account, Bread, Butter and Milk Account, Dhobey's Account, Servants' Wages Account. etc. Price, Rs. 3 per copy.

Cash must accompany order. Articles are sent by V.-P. P. to persons in Government employment only.

Application is to be made to the Curator, Thomason College Book Depôt, Roorkee.

Half-yearly list of new books and periodicals for sale at the Library of the Asiatic Society of Bengal, 57 Park Street, Calcutta.

ASIATIC SOCIETY'S PUBLICATIONS.

Proceedings Nos. 9 to 11 of 1901 and No 1 of 1902, at 8*a*.
Journal, Part I. No. 2 of 1901, at Rs. 2.
,, Part II, No. 2 of 1901, at Rs 2.
,, Part III, No. 2 of 1901, and Part III, No. 1 of 1902, at Rs. 2.

BIBLIOTHECA INDICA.

Upamitibhavaprapancha Katha. Fasc. 4 at 6*a*.
Catapatha Brahmana. Vol. I, Fasc. 5, at 6*a*.
Varsakriya Kaumudi. Fasc. 3 and 4, at 6*a*.
Nityacarapaddhati. Fasc. 2 and 3, at 6*a*.
Apastamba Sranta Sutra. Vol. III, Fasc. 16, at 6*a*
Mahabhasyaprodipodyata Vol. II, Fasc. 2 and 3, at 6*a*
Al Muquddasai (English) Vol I, Fasc. 2, at 12*a*.

List of Books published by the Meteorological Department during the current quarter.

Monthly Weather Review of India for the month of February 1902. By John Eliot and Lala Hem Raj (illustrated by 5 plates) Quarto. Paper cover. Re. 1
Indian Meteorological Memoirs, Volume XII, Part III By John Eliot (illustrated by 68 plates) Quarto. Paper cover Rs 3.
Indian Meteorological Memoirs, Volume XII, Part IV. By W. L. Dallas, Quarto. Paper cover Rs. 3

List of books published by Meteorological Department from 1st January to 30th June, 1902.

Monthly Weather Review of India, from September, 1901, to January, 1902. By W. L Dallas (illustrated by five plates). Quarto Paper cover. Re. 1 per month
Report of the Director, Government Observatory, Bombay, for the year ending 31st December, 1901. By N. A F Moos Quarto Paper cover
Report on the Kodaikanal and Madras Observatories for the period 1st April to 31st December, 1901. By C Michie Smith. Quarto. Paper cover.
Indian Meteorological Memoirs, Volume XII, Part II. By John Eliot Quarto. Paper cover Rs 3.
Indian Meteorological Memoirs, Volume XIII. By John Eliot Quarto. Paper cover Rs 5

List of new books published by the Geological Survey of India during the week ending 16th August, 1902.

Geology of Western Rajputana. By Tom D La Touche, B.A (Cantab), F G.S. Rs 2.

The Indian Law Reports.

Published under Authority.

THE Indian Law Reports, published under the authority of the Governor-General in Council, appear in monthly parts, published as soon as possible after the first of each month at Calcutta, Madras, Bombay, and Allahabad, and comprise four series—one for the Calcutta High Court, a second for the Madras High Court, a third for the Bombay High Court, and a fourth for the Allahabad High Court. The cases heard by the Privy Council on appeal from each High Court are reported in the Series for that High Court. Cases heard by the Privy Council on appeal from Provinces in India not subject to any High Court are reported in the Calcutta Series.

The Calcutta Series is distributed by the Bengal Secretariat Book Depôt, and the Madras, Bombay, and Allahabad Series are distributed direct from Madras, Bombay, and Allahabad respectively.

In supersession of the previous advertisements, on and from the 1st January 1889 the terms of subscription and sale will be as follows for current issues as well as for back numbers of the reports from 1876:—

Terms of subscription, payable annually in advance.

For the complete series, *including postage* (Inland rate) Rs. 22-8,

Ditto, ditto (Overland rate) Rs. 28.

	Without postage.	With postage.
	Rs. A. P.	Rs. A. P.
For the Calcutta Series	10 0 0	12 8 0
„ each of the Madras, Bombay, and Allahabad Series	6 0 0	7 0 0
„ a part of the Calcutta Series purchased separately (*inclusive of postage in India*)	.....	2 0 0
„ a part of each of the Madras, Bombay, and Allahabad Series purchased separately (*inclusive of postage in India*)	.....	1 0 0

The following are the rates at which deductions will be made for parts out of print and at which duplicate copies will be supplied to subscribers when required in place of copies lost in transit, provided complaint of non-receipt is made to the Publisher within three months of the date of publication:—

	For town.	For mufassal.
	Rs. A. P.	Rs. A. P.
For the Calcutta Series, per copy ...	0 8 9	0 10 3
„ each of the Madras, Bombay, and Allahabad Series, per copy ...	0 5 3	0 5 9
„ the Calcutta Series, for the year	7 2 6	8 6 3
„ each of the Madras, Bombay and Allahabad Series, for the year	4 4 6	4 11 3

Persons desiring to subscribe for or purchase the Report should apply to—

The Superintendent, Government Press, Madras.

„ Superintendent, Government Central Press, Bombay.

„ Curator of Government Books, United Provinces of Agra and Oudh, Allahabad.

„ Officer in charge, Bengal Secretariat Book Depôt, Calcutta.

Orders and subscriptions for 1903 should be at once registered and remitted by money-order payable to the Treasurer, Bengal Secretariat, Calcutta.

ADVERTISEMENTS will be received for publication on the wrappers of the Indian Law Reports, Calcutta Series, at the following rates, payable in advance—

	One page.	Half page.	Quarter page.
	Rs.	Rs.	Rs.
For one issue ...	20	14	9
„ three issues ...	55	36	24
„ six „ ...	100	68	45
„ nine „ ...	145	96	64
„ twelve „ ...	180	120	80

SEVERAL volumes of the BENGAL LAW REPORTS, from August 1868 to December 1875, and FULL BENCH RULINGS, Parts I and II, are available at the following rates:—

	Without postage.	With postage.
	Rs. A. P.	Rs. A. P.
Bengal Law Reports, for one year ...	20 0 0	22 8 0
Single copies, Rs. 2 per copy.		
Full Bench Rulings, Parts I and II ...	20 0 0	22 8 0

Obtainable at the Bengal Secretariat Book Depôt, Writers' Buildings, Calcutta.

Remittances to be forwarded to the Treasurer, Bengal Secretariat, Writers' Buildings, Calcutta.

The complete series of the INDIAN LAW REPORTS for the years 1876 to 1885, and 1890 to 1892, 1894, 1896 to 1901 having now been reprinted, are available, and may be purchased for all the years, or any particular year, on application to the Officer in charge, Bengal Secretariat Book Depôt.

The wanting parts of the Reports for the remaining years are being reprinted, and complete Reports from the beginning to date will be available shortly.

NOTICE TO SUBSCRIBERS.

SUBSCRIBERS are hereby informed that, unless complaint of non-receipt of any number is made to the Publisher of the series within three months of the date of publication, the benefits of the subscription rates for copies lost in transit will not be allowed, and full rates will be charged. The price per copy of each of the four series at subscription rates and at full rates is shown below:—

	Per copy. Subscription rate. Town.	Mofussal.
	Rs. A. P.	Rs. A. P.
Calcutta Series	0 8 9	0 10 3
Each of the Madras, Bombay, and Allahabad Series ...	0 5 3	0 5 9

	Full rate. Town.	Mofussal.
	Rs. A. P.	Rs. A. P.
Calcutta Series ...	2 0 0	2 0 0
Each of the Madras, Bombay, and Allahabad Series ...	1 0 0	1 0 0

Notice.

THE *CALCUTTA GAZETTE*.

The 1st March 1901.—From this date the subscription to, and postage for, the *Calcutta Gazette* will be at the following rates, payable in advance:—

PER ANNUM.	For Calcutta.	For the Mufassal, including postage.
	Rs. A.	Rs. A.
Entire *Gazette*	15 0	20 0
Parts I, IA and IB together ...	5 0	7 8
Part II	1 0	2 12
Parts III, IV and IVA together	4 0	6 0
„ V and VI together ...	2 0	3 0
Appendix (Marine Notifications)	1 0	2 12
Supplement	5 0	7 8
PER ISSUE.		
Entire *Gazette*	0 8	0 10
Supplement	0 4	0 5

N.B.—Separate Parts of each issue of the *Gazette*, and occasionally important Rules and Extracts, can be obtained from the Officer in charge, Bengal Secretariat Book Depôt, at the rate of one anna for every sixteen pages or a fraction thereof. Postage according to weight.

RATES FOR ADVERTISEMENTS in the *Calcutta Gazette*:—

Full Page, per issue	Rs. 20
Half „ „ „	„ 10

Casual advertisements, 4 annas per line.

Annual Statement of the Sea-borne Trade and Navigation of the Bengal Presidency and of its Chief Port (Calcutta), and each of its Subordinate Ports—Chittagong, Balasore, Cuttack, Pooree, and Narainguge, Volumes I and II. Price Rs. 20 for 1899-1900. Published at the Calcutta Custom House. Previous years' volumes can also be obtained at the same price.

GOVERNMENT OF BENGAL—MARINE DEPARTMENT.

NOTICE TO MARINERS—No. 254.

[First Publication.]

KOREA, WEST COAST.

Sir James Hall group—Shoals in the vicinity.

THE British Admiralty has given notice (No. 489 of 1902) of the existence of the undermentioned shoals in the vicinity of the Sir James Hall group :—

a. A sandy shoal, with a depth of 4½ fathoms over it, situated with the north-western extremity of Peng yong Do bearing S. 71° W., distant 3½ miles, and the 455 foot hill on the same island, S. 27° E.

Approximate position, lat. 38° 0′ N., long. 124° 41½′ E.

There is another sandy shoal, with a depth of 4¾ fathoms over it, situated at a distance of 6 cables S. 61° E. from the above.

b. A shoal, composed of sand and shells, with a depth of 3¾ fathoms over it, situated with western extremity of Kulin Do bearing N. 22° W., distant 14 cables, and northern extremity of Te chong Do, S. 79° W.

Approximate position, lat. 37° 54′ N., long. 124° 58′ E.

c. A shoal patch, with a depth of 2¼ fathoms over it, situated with the southern extremity of Erha Do bearing N. 81° E., distant 2¾ miles, and southern extremity of Changlin Do, N. 24° W.

Approximate position, lat. 37° 44′ N., long. 125° 10½′ E.

Certain other shoals in the vicinity of Suni Do and Rooper harbour have been found, for which reference should be made to the new edition of Chart No. 1258, which will be issued.

(*Variation 4° Westerly in 1902.*)

This Notice affects the following Admiralty Charts :—Approaches to Ping yang inlet No. 1257; approaches to Seoul, No. 1258; Also, China Sea Directory, vol. IV, pages 45, 46, 47, 48; and Supplement, 1898, page 3.

E. J. BEAUMONT, COMDR., R.I.M.,
Port Officer of Calcutta.

Published for general information.

C. B. BAYLEY,
CALCUTTA, *the 25th August 1902.* *Asst. Secy., Marine Department.*

GOVERNMENT OF BENGAL—MARINE DEPARTMENT.

NOTICE TO MARINERS—No. 255.

[First Publication.]

BAY OF BENGAL—CHITTAGONG COAST.

Karnafulli river—Depth of water found in the river channels.

	Ft.	In.
Track No. I—Outer bar	12	9
Track No. II—Inner bar—		
Disc on diamond	10	3
Batten beacon on pillar	10	6
Track No. III—		
Triangle on cross and ball	23	0
Track No. IV—Guptakhally crossing—		
Tripod on diamond	15	0

E. J. BEAUMONT, COMDR., R.I.M.,
Port Officer of Calcutta.

Published for general information.

C. B. BAYLEY,
CALCUTTA, *the 25th August 1902.* *Asst. Secy., Marine Department.*

GOVERNMENT OF BENGAL—MARINE DEPARTMENT.

NOTICE TO MARINERS—No. 244.

[Second Publication.]

INDIA, EAST—COROMANDEL, SOUTH COAST.

Point Calimere—Date of alteration extended.

WITH reference to Notice to Mariners No. 40, dated the 22nd February last, issued by this office, the Presidency Port Officer, Madras, has given further notice (No. 43 of 1902) that the date for the alteration of the light at Point Calimere noted therein has been altered from 1st September to 1st December 1902.

E. J. BEAUMONT, COMDR., R.I.M.,
Port Officer of Calcutta.

Published for general information.

C. B. BAYLEY,
CALCUTTA, *the 13th August 1902.* *Asst. Secy., Marine Department.*

GOVERNMENT OF BENGAL—MARINE DEPARTMENT.

NOTICE TO MARINERS—No. 245.

[Second Publication.]

INDIA, EAST—MADRAS COAST.

Masulipatam light—Date of alteration postponed.

WITH reference to Notice to Mariners No. 41, dated the 22nd February last, issued by this office, the Presidency Port Officer, Madras, has given further notice (No. 44 of 1902) that the alteration of the light at Masulipatam is postponed. Further notice will be given of the date from which the intended alteration will take place.

E. J. BEAUMONT, COMDR., R.I.M.,
Port Officer of Calcutta.

Published for general information.

C. B. BAYLEY,
CALCUTTA, *the 13th August 1902.* *Asst. Secy., Marine Department.*

GOVERNMENT OF BENGAL—MARINE DEPARTMENT.

NOTICE TO MARINERS—No. 246.

[Second Publication.]

INDIA, EAST—COROMANDEL COAST.

Cuddalore—Alteration of the character of light.

THE Presidency Port Officer, Madras, has given notice (No. 45 of 1902) that from and after 1st October 1902, the light at Cuddalore will be altered from D 6th Order red fixed to D 4th Order white occulting showing four occultations every minute visible from all directions seaward, distance 12 miles.

E. J. BEAUMONT, COMDR., R.I.M.,
Port Officer of Calcutta.

Published for general information.

C. B. BAYLEY,
CALCUTTA, *the 13th August 1902.* *Asst. Secy., Marine Department.*

GOVERNMENT OF BENGAL—MARINE DEPARTMENT.

NOTICE TO MARINERS—No. 247.

[Second Publication.]

INDIA, EAST—MADRAS COAST.

Vizagapatam—A temporary white light exhibited.

THE Presidency Port Officer, Madras, has given notice (No. 46 of 1902) that a temporary white light visible 10 miles in clear weather will be exhibited (when information is received from the Agents of Steam Ship Companies that a steamer is expected) from the roof of a small white-washed building near the Port Office at the Port of Vizagapatam, as a mark for the anchorage off the port.

E. J. BEAUMONT, COMDR., R.I.M.,
Port Officer of Calcutta.

Published for general information.

C. B. BAYLEY,
CALCUTTA, *the 13th August 1902.* *Asst. Secy., Marine Department.*

GOVERNMENT OF BENGAL—MARINE DEPARTMENT.

NOTICE TO MARINERS—No. 248.

[Second Publication.]

INDIA, SOUTH-EAST—CEYLON, NORTH-WEST COAST.

Chuttram—Erratum in position given.

WITH reference to Notice to Mariners No. 194, dated the 30th June last, issued by this Office, the Presidency Port Officer, Madras, has given further notice (No. 47 of 1902) as follows:—

For "Chuttram" in Long. 80° 37′
Read "Chuttram" in Long. 79° 23′

E. J. BEAUMONT, COMDR., R.I.M.,
Port Officer of Calcutta.

Published for general information.

C. B. BAYLEY,
Asst. Secy., Marine Department.

CALCUTTA, *the 13th August 1902.*

GOVERNMENT OF BENGAL—MARINE DEPARTMENT.

NOTICE TO MARINERS—No. 249.

[Second Publication.]

INDIA, WEST—SIND COAST.

Approach to Karachi harbour—Less water reported.

THE Bombay Government has given notice (No. 93 of 1902) that the Captain of H. M. S. *Lapwing* reports having, on 14th July 1902, obtained 4 to 5 fathoms less water than shown on the chart, Cape Monze to Kediwari Mouth, No. 41, in the following approximate positions:—

Manora Point N. 53½° E. (true) distant 8 miles 6¾ fathoms.
Ditto N. 54° E. (true) distant 7 miles 8 fathoms.
Ditto N. 55° E. (true) distant 6 miles 6¼ fathoms.
Ditto N. 53° E. (true) distant 4 miles 7 fathoms.

The soundings are not reduced.

This Notice affects the following Admiralty Charts:—Cape Monze to Kediwari Mouth, No. 41; Maskat to Karáchi, No. 38, and West Coast of Hindustan Pilot, 4th Edition, 1898, page 304.

E. J. BEAUMONT, COMDR., R.I.M.,
Port Officer of Calcutta.

Published for general information.

C. B. BAYLEY,
Asst. Secy., Marine Department.

CALCUTTA, *the 13th August 1902.*

GOVERNMENT OF BENGAL—MARINE DEPARTMENT.

NOTICE TO MARINERS—No. 250.

[Second Publication.]

AFRICA, NORTH-EAST—GULF OF ADEN.

Aden harbour—Datum pile washed away.

WITH reference to Notice to Mariners No. 118, dated the 2nd May last, issued by this Office, the Bombay Government has given notice (No. 97 of 1902) that the Datum pile has been washed away: the patch on which it was erected is now marked by a buoy painted red.

E. J. BEAUMONT, COMDR., R.I.M.,
Port Officer of Calcutta.

Published for general information.

C. B. BAYLEY,
Asst. Secy., Marine Department.

CALCUTTA, *the 13th August 1902.*

GOVERNMENT OF BENGAL—MARINE DEPARTMENT.

NOTICE TO MARINERS—No. 251.

[Second Publication.]

BAY OF BENGAL—Burma coast.

Baragua flat lightship.

Telegraphic communications have been received from the Principal Port Officer, Burma, Rangoon, stating that the Baragua flat lightship, which was off its station on the 9th instant, was replaced in correct position on the evening of the 12th idem.

E. J. Beaumont, Comdr., R.I.M.,
Port Officer of Calcutta.

Published for general information.

C. B. Bayley,
Calcutta, *the 16th August 1902.* *Asst. Secy., Marine Department.*

GOVERNMENT OF BENGAL—MARINE DEPARTMENT.

NOTICE TO MARINERS—No. 235.

[Third Publication.]

INDIA, WEST—Bombay coast.

Bombay harbour—Temporary removal of the Outer light-vessel.

The Bombay Government has given notice (No. 87 of 1902) that the Light-vessel *Bombay* will be brought in for docking, examination and repairs on the 15th October 1902. During the period she is off her station a Pilot Schooner, anchored in the Light-vessel's position, will exhibit, in addition to her Anchor Light, two steamers' Masthead Lights, lashed back to back and suspended on a stay between the masts at a height of 56 feet above the water line.

E. J. Beaumont, Comdr., R.I.M.,
Port Officer of Calcutta.

Published for general information.

C. B. Bayley,
Calcutta, *the 5th August 1902.* *Asst. Secy., Marine Department.*

GOVERNMENT OF BENGAL—MARINE DEPARTMENT.

NOTICE TO MARINERS—No. 236.

[Third Publication.]

INDIA, WEST—Malabar coast.

Tellicherri—Positions of Port pillars.

The Bombay Government has given notice (No. 88 of 1902) that the present positions of the Port Pillars at Tellicherri are as follows:—

North Port Pillar is situated on the point westward of the entrance to Anjekandi River and from it—

Tellicherri Light-house bears	...	S. 47° 30′ E.
Kodali Point bears ...	...	S. 79° 30′ E.
82-feet Hill bears ...	...	N. 18° 30′ W.

Distance 200 feet.

South Port Pillar is situated on the Nilot Point and from it—

Tellicherri Light-house bears	...	N. 38° 30′ W.
207-feet Hill bears ...	...	N. 62° 30′ E.
Parchikun Hill bears ...	...	S. 87° 00′ E.

Bearings are true.

This Notice affects the following Admiralty Chart:—Anchorages on the West Coast of India—Kannanur Anchorage—Tellicherri Anchorage, No. 1322, and West Coast of Hindusta Pilot, 4th Edition, 1898, page 139.

E. J. Beaumont, Comdr., R.I.M.,
Port Officer of Calcutta.

Published for general information.

C. B. Bayley,
Calcutta, *the 5th August 1902.* *Asst. Secy., Marine Department.*

GOVERNMENT OF BENGAL—MARINE DEPARTMENT.

NOTICE TO MARINERS—No. 237.

[Third Publication.]

BAY OF BENGAL—Burma coast.

Rangoon river—Umbrella beacon blown down—New beacon erected.

The Bombay Government has given notice (No. 90 of 1902) that a new beacon has been erected S. 25° E. 250 feet from the site of the Umbrella beacon which was blown down in the cyclone of 6th May 1902.

This new beacon is only of use for No. 1 track, Choki Lumps. As being erected to south-eastward of site of old Umbrella Beacon, it has ceased to be a mark (when on with Syriam Pagoda) for the south-east end of the D'Silva Shoal, the mark for which is now Syriam Pagoda on with east side of Umbrella tree.

The new beacon will be referred to in future as North Beacon.

This Notice affects the Admiralty Chart :— Rangoon River and approaches, No. 833 : Also, Bay of Bengal Pilot, 3rd Edition, 1901, page 354.

E. J. Beaumont, Comdr., r.i.m.,
Port Officer of Calcutta.

Published for general information.

C. B. Bayley,
Asst. Secy., Marine Department.

Calcutta, *the 5th August 1902.*

GOVERNMENT OF BENGAL—MARINE DEPARTMENT.

NOTICE TO MARINERS—No. 238.

[Third Publication.]

EASTERN ARCHIPELAGO—Timar, north coast.

Brilliant bank—Particulars given.

The British Admiralty has given notice (No. 426 of 1902) that Brilliant bank, Dilhi harbour approach, is of small extent, with a least depth of 13 fathoms over it, and is situated with Dilhi lighthouse bearing S. 19° E., distant 13¼ cables, and Britomart (Fotocama) point N.74° E., or about 6 cables S. 35° W. from its position as shown on the Chart.

Approximate position on Admiralty Chart No. 1460, lat. 8° 30¾′ S., long. 125° 34′ E.

(*Variation 2° Easterly in 1902.*)

This Notice affects the following Admiralty Chart :—Dilhi harbour on Chart No. 1460 : Also, Eastern Archipelago, vol. II, 1893, page 281; and Supplement, 1899, page 30.

E. J. Beaumont, Comdr., r.i.m.,
Port Officer of Calcutta.

Published for general information.

C. B. Bayley,
Asst. Secy., Marine Department.

Calcutta, *the 8th August 1902.*

GOVERNMENT OF BENGAL—MARINE DEPARTMENT.

NOTICE TO MARINERS—No. 239.

[Third Publication.]

EASTERN ARCHIPELAGO—Borneo, south coast.

Barito river—Depth on reef in approach.

The British Admiralty has given notice (No. 428 of 1902) that the depth over the reef situated about 14½ miles S. 12° E. from Burung point, Barito river, is 8 feet, and not 2 fathoms, as shown on the Chart.

Approximate position, lat. 3° 48′ S., long. 114° 33′ E.

(*Variation 2° Easterly in 1902.*)

This Notice affects the following Admiralty Chart :—Eastern Archipelago, No. 941b : Also, Eastern Archipelago, part II, 1893, page 297; and Supplement, 1899, page 32.

E. J. Beaumont, Comdr., r.i.m.,
Port Officer of Calcutta.

Published for general information.

C. B Bayley,
Asst. Secy., Marine Department.

Calcutta, *the 8th August 1902.*

GOVERNMENT OF BENGAL—MARINE DEPARTMENT.

NOTICE TO MARINERS—No. 240.

[Third Publication.]

AUSTRALIA—QUEENSLAND, INNER ROUTE.

Lizard island and cape Melville—Particulars of certain shoals.

THE British Admiralty has given notice (No. 438 of 1902) that information, dated 27th April 1902, has been received from Commander C. E. Monro, H. M. Surveying Vessel *Dart*, containing particulars of the undermentioned newly found shoals off Lizard island and cape Melville:—

a. A shoal, with a least depth of 2¾ fathoms, situated with Lizard island bearing S. 6° E., distant 4½ miles.

Approximate position, lat. 14° 35 ½′ S., long. 145° 27¾′ E.

This shoal is 1½ cables in extent, the bottom in its vicinity is very uneven. As this reef is probably identical with that marked P. D., half a mile to the northward of it, the latter has been erased from the Charts.

b. A shoal, now named Singleton patch, which has a least depth of 5½ fathoms over it, and is situated with Rocky point bearing S. 5° W., distant 4 miles, and Pipon islands lighthouse N. 72° W. It is about 1½ cables in extent North and South, and has depths of 12 fathoms around it.

c. A shoal, now named Aylen patch, one mile westward of Oswald shoal, with a least depth of 5 fathoms over it at low water springs, and is situated with Pipon islands lighthouse bearing S. 59° E., distant 2¾ miles, and Channel rocks S. 12° E. It is about 3 cables in extent North-east and South-west.

Broomfield rock was unsuccessfully searched for, and has in consequence been expunged from the Charts.

Approximate position, lat. 14° 12¾′ S., long. 144° 37½′ E.

(*Variation 5° Easterly in 1902.*)

This Notice affects the following Admiralty Charts:—Hope islands to Turtle group, No. 2923; Turtle group to Claremont point, No. 2922: Also, Australia Directory, vol. II, 1898, pages 359, 364, 365.

E. J. BEAUMONT, COMDR., R.I.M.,
Port Officer of Calcutta.

Published for general information.

C. B. BAYLEY,
CALCUTTA, *the 8th August 1902.* *Asst. Secy., Marine Department.*

GOVERNMENT OF BENGAL—MARINE DEPARTMENT.

NOTICE TO MARINERS—No. 241.

[Third Publication.]

PERSIAN GULF, WESTERN SHORE—BAHREIN HARBOUR.

Shoal sounding in approach.

THE British Admiralty has given notice (No. 440 of 1902) that information, dated 13th June 1902, has been received from Mr. T. L. Molony, Master of the S.S. *Mozaffari*, that he obtained a sounding of 3½ fathoms in the position where a depth of 4¾ fathoms is shown on the Chart in the approach to Bahrein harbour, with Ras Rakkin bearing S. 26° E., distant 13 miles.

Approximate position, lat. 26° 23′ N., long. 51° 8′ E.

(*Variation Nil in 1902.*)

This Notice affects the following Admiralty Chart:—Persian gulf, No. 2837b: Also Persian Gulf Pilot, 1898, page 126.

E. J. BEAUMONT, COMDR., R.I.M.,
Port Officer of Calcutta.

Published for general information.

C. B. BAYLEY,
CALCUTTA, *the 8th August 1902.* *Asst. Secy., Marine Department.*

GOVERNMENT OF BENGAL—MARINE DEPARTMENT.

NOTICE TO MARINERS—No. 242.

[Third Publication.]

AFRICA, CAPE COLONY—TABLE BAY.

Robben island—Fog signal intended.

THE British Admiralty has given notice (No. 443 of 1902) that it is intended in about two months' time to establish at Robben island lighthouse, a fog explosive, which will, during thick or foggy weather, give *one report* every *five minutes.*

Approximate position, lat. 33° 49′ S., long. 18° 22½′ E.

Further Notice will be given when this signal has been established.

This Notice affects the following Admiralty Charts:—Cape Lopez to Cape of Good Hope, No. 1013; Honaeklip bay to port Natal, No. 2095; Table bay to Donkin bay, No. 2091; Cape of Good Hope to False bay, No. 636; Table bay to cape Agulhas, No. 2082; Table bay, No. 1920: Also, List of Lights, 1902, part IV, No. 807; part VI, No. 2; and Africa Pilot, part III, 1897, page 57.

E. J. BEAUMONT, COMDR., R.I.M.,
Port Officer of Calcutta.

Published for general information.

O. B. BAYLEY,
Asst. Secy., Marine Department.

CALCUTTA, *the 8th August 1902.*

GOVERNMENT OF BENGAL—MARINE DEPARTMENT.

NOTICE TO MARINERS—No. 243.

[Third Publication.]

AFRICA, SOUTH-EAST, CAPE COLONY—ALGOA BAY, EASTERN APPROACH.

Stalwart point—Shoal water extending from—

THE British Admiralty has given notice (No. 451 of 1902) that the shoal water off Stalwart point extends further from the shore than shown upon the Admiralty Charts.

As this report agrees with information already received, the shoal bank on the Chart has been extended to a distance of eight-tenths of a mile from the high-water line.

Approximate position, lat. 33° 28′ S, long. 27° 14′ E.

(*Variation 29° Westerly in 1902.*)

This Notice affects the following Admiralty Charts:—Waterloo bay to Bashee river, No. 2086; cape St. Francis to Waterloo bay, No. 2085: Also, Africa Pilot, part III, 1897, page 143.

E. J. BEAUMONT, COMDR., R.I M.,
Port Officer of Calcutta.

Published for general information.

O. B. BAYLEY,
Asst. Secy., Marine Department.

CALCUTTA, *the 8th August 1902.*

REGISTERED No., C209.]

No. 35 of 1902.

SUPPLEMENT TO

The Calcutta Gazette.

WEDNESDAY, AUGUST 27, 1902.

OFFICIAL PAPERS.

[Non-Subscribers to the GAZETTE *may receive the* SUPPLEMENT *separately on payment of five rupees per annum if delivered in Calcutta, or seven rupees and eight annas if sent by post.]*

CONTENTS.

	Page
RESOLUTION on the Report on the working of the Shipping Offices at Calcutta and the outports ...	1203
Report on the state of the Salt Market for the first quarter of 1902 1903	1205
Weather and Crop Report for the week ending the 25th August 1902	1208
Prices-current (retail and wholesale) of food-grains and salt in the head-quarters station bazars of the districts of Bengal on the 15th August 1902	1212
CIRCULAR and Eastern Canal for the week ending Saturday the 23rd August 1902	1218
Bengal and North-Western Railway for the month of April 1903	1219
Segowlie-Rakaaul Branch Railway for the month of March 1902	1221
Weekly Return of Traffic Receipts on Indian Railways ...	1223

RESOLUTION ON THE REPORT OF THE WORKING OF THE SHIPPING OFFICES AT CALCUTTA AND THE OUTPORTS.

No. 1560Marine.

Government of Bengal.

MARINE DEPARTMENT.

MARINE.

Dated Calcutta, the 19th August 1902.

RESOLUTION.

READ—

Letter No. 891B., dated 25th July 1902, from the Secretary to the Board of Revenue, submitting the Report on the working of the Shipping Offices at Calcutta, Chittagong and Orissa Ports for the year 1901-1902.

The receipts of the Calcutta Shipping Office amount to Rs. 69,066, showing an increase of Rs. 1,692 over the previous year. The chief cause of the increase is the sale of discharge certificates, from which Rs. 4,760 were realized. There were larger shipments under Indian articles, and no seamen were shipped without certificates. Under discharging fees there was a decrease of Rs. 1,662 due to the discharge of fewer seamen in port, owing to vessels discharging their crews at outports and returning them as passengers; fresh crews were then engaged and sent out in the same way.

In order to cope with the increase of work in the Native Department, and to afford a needed improvement, it has been proposed to open a branch Shipping Office in the vicinity of the Kidderpore Docks, and the matter is now under the consideration of the Board. It will materially lessen the distance to be travelled by masters and men, and will effect considerable convenience to all concerned.

The disbursements of the office show a decrease of Rs. 965. There is a large decrease of Rs. 2,456 under overtime fees due to the orders of Government, under which the entire amount of fees earned during the year was brought to account, and the officer doing the work was paid a fixed allowance instead of a portion of the fees as heretofore.

Under Trust Funds the receipts amounted to Rs. 46,422, or a falling off of Rs. 22,048. The decrease is accounted for by the fact that fewer seamen under European articles were shipped and discharged during the year. The undisbursed balance at the close of the year was Rs. 8,695, the remainder being paid out in the usual way.

The number of seamen shipped and discharged were—

Shipped	...	...	... 37,382
Discharged	...	...	... 31,451

Under those shipped under European articles there is a decrease of 398, while under Indian articles, notwithstanding the unusually large numbers shipped during the previous year as crews on vessels chartered for Government transport, the figures of the year under review again show a small advance. It has been decided by the Government of India that the law as it stands does not preclude the employment of Eurasians in merchant vessels on the same terms as Europeans, and since then 37 Eurasians have been shipped under European articles and 97 under Indian articles, or a total of 134, against 72 under Indian articles only during the previous year. A few are able-bodied seamen, but the greater number are Engineers and clerks, with a few gunners, mess-room stewards and ordinary seamen. In addition to the above 43 seamen were shipped and 59 discharged by Foreign Consuls.

Owing to the decrease in the number of discharges under European articles, the value of seamen's money-orders fell from Rs. 16,634 to Rs. 7,622.

At the request of the American Consul an American cabin boy, who complained of ill-treatment by the Steward, was given his discharge. Two other complaints in regard to provisions were made. These were found to be true and the necessary steps taken.

In regard to the condition of seamen, there is nothing special to note on the condition of European seamen. The numbers of shipped and discharged Europeans are steadily decreasing; and, judging from the complaints of Masters and bearing in mind their relative cost, the Shipping Master is of opinion that lascars will gradually but surely displace European crews.

At the Port of Chittagong the number of seamen shipped and discharged were 161 and 539, respectively, against 45 and 43 in the previous year. Of the number discharged, 521 represented the crew of seven steamers of the Clan Line, who were paid off on termination of their agreement.

As a consequence of the larger number shipped and discharged, the receipts of the Shipping Office increased from Rs. 78 in the previous year to Rs. 1,314. Under overtime fees there is an increase of Rs. 568, which is now being brought to account under the recent orders of the Government of India.

The disbursements amounted to Rs. 238, which represent three-fourths of the overtime fees earned by the Shipping Officers. No expenditure was incurred on the relief of distressed seamen.

The receipts from Trust Funds amounted to Rs. 37,340. The whole amount was disbursed.

At the Orissa Ports only one seaman was discharged. The Shipping Master at False Point paid four visits to vessels, but no complaints were made nor defects discovered.

By order of the Lieutenant-Governor of Bengal,

D. B. HORN,

Secretary.

REPORT ON THE STATE OF THE SALT MARKET FOR THE FIRST QUARTER OF 1902-1903.

No. 993B., dated Calcutta, the 19th August 1902.

From—H. WHEELER, Esq., Secretary to the Board of Revenue, L. P.,
To—The Secretary to the Government of Bengal, Financial Department.

I AM directed to submit the following report on the state of the salt market for the first quarter of 1902-1903, comprising the months of April, May and June 1902.

THE HON'BLE MR. BOURDILLON, C.S.I.

2. The quantity of salt of every description cleared during the quarter amounted to 32,49,311 maunds, as compared with 25,77,904 maunds in the preceding quarter, and 28,02,529 maunds in the corresponding quarter of the previous year; and the net amount of duty levied thereon was Rs. 76,80,087, as against Rs. 59,82,014 in the previous quarter, and Rs. 65,33,524 in the corresponding quarter of the previous year.

3. The quantity of locally-made salt removed from the *golas* in Orissa during the quarter are shown in Table I below:—

TABLE I.

1	2
	Puri.
	Mds.
Balance at the close of the previous quarter ...	70,562
Manufactured or added during the quarter ...	Nil
Total ...	70,562
Sold during the quarter	50,350
Wastage	20,212
Total ...	70,562
Balance at the close of the quarter	Nil

The total sales of locally-made salt during the quarter amounted to 50,350 maunds, and taking into account the wastage of 20,212 maunds, the total stock was exhausted. In the preceding quarter 91,796 maunds of this salt were sold, and 39,768 maunds were so disposed of in the corresponding quarter of the previous year.

4. The subjoined Table (II) shows in detail the importations into the port of Calcutta and the total clearances of sea-imported salt during the quarter, as compared with the figures of the corresponding quarters of the two previous years:—

TABLE II.

WHENCE IMPORTED.	1900-1901. First quarter.		1901-1902. First quarter.		1902-1903. First quarter.	
	Imported.	Cleared.	Imported.	Cleared.	Imported.	Cleared.
1	2	3	4	5	6	7
	Mds.	Mds.	Mds.	Mds.	Mds.	Mds.
United Kingdom	10,08,373	11,51,503	11,31,725	10,72,243	11,46,992	11,16,449
Hamburg	3,27,210	3,07,603	2,71,071	2,28,141	1,22,513	3,73,696
Batoum (Russia)	.....	.....	.....	1	.....	.....
Port Said	.....	.....	.....	.....	1,27,034	1,19,736
Saiff	2,45,045	4,38,403	4,85,888	4,38,078	3,81,038	5,06,665
Rawayah	.....	1,52,913	.....	14,334	1,06,044	68,097
Aden	93,017	2,03,608	2,77,134	3,58,440	4,60,690	5,07,134
Muscat, Linga, Hanjam	.....	94,124	98,000	80,074	.....	21,416
Rock salt	.....	.....	10,056	6,444	.....	5,100
Diago-Suarez (Madagascar)	.....	.....	8,036	2,400	.....	3
North Africa, Egypt, &c.	.....	.....	.....	.....	.....	2,000
Bombay	3,16,366	1,68,226	1,53,424	1,70,425	1,01,402	1,79,397
Coconada	840	.....	.....	.....	.....	.....
Total ...	19,91,751	26,67,085	24,94,934	24,00,577	25,16,811	27,84,670

Compared with the corresponding quarter of the previous year, there was an increase both in the importations and clearances. The increase was mainly contributed by salts from Port Said, Aden and Rawayah.

5. Table III shows the quantity of sea-imported salt remaining in the warehouses at the close of the quarter, as compared with the previous four quarters:—

TABLE III.

WHERE STORED.	First quarter of 1901-1902.	Second quarter of 1901-1902.	Third quarter of 1901-1902.	Fourth quarter of 1901-1902.	First quarter of 1902-1903.
1	2	3	4	5	6
	Mds.	Mds.	Mds.	Mds.	Mds.
Sulkea Government Salt Golas	5,56,963	8,23,419	14,61,516	23,67,661	16,10,977
Kidderpore Dock ditto	2,46,629	5,86,570	8,28,233	8,29,564	8,60,421
Chittagong ditto	36,044	1,07,319	60,782	1,14,509	77,257
Narayangunj (private bonded salt warehouses) ...	34,294	15,729	41,555	50,072	54,982
Khulna { ditto ditto } ...	59	.	...	.....	.... .
Chandbali { ditto ditto } ...	6,505	3,021	11,153	6,802	8,846
Bhairab Bazar { ditto ditto } ...	21,996	23,000	3,336	26,731	24 636
Jhalakati { ditto ditto } ...	10,930	56,324	30,692	96,415	86,354
Ashuganj { ditto ditto } ..	.....		.. .	5,000	5,190
Dacca { ditto ditto } ...	.....	.....	.. ...	...	3,030
Total ...	9,22,420	16,16,582	24,37,216	34,96,534	27,40,713

Stocks at the close of the quarter under review were less than those of the previous quarter, but were much larger than those of the corresponding quarter of the previous year.

6. The despatches of salt from Calcutta by boat and by the several railways passing through the different pass-stations into the interior of the country both east and west of the river Hooghly, as well as the despatches by steamers and flats during the quarter and the corresponding quarters of the last two years, are shown in Table IV below:—

TABLE IV.

PERIOD.	BY WATER.					BY RAIL.			BY STEAMERS AND FLATS.	
	Vid Balikhal.	*Vid* Sankrail.	*Vid* Gewankhali.	*Vid* Kidderpore.	*Vid* Balliaghatta.	By the East Indian Railway.	By the Eastern Bengal, Bengal-Central, and South-Eastern Railways, or *vid* Chitpur.	By the Bengal-Nagpur Railway or *vid* Shalimar.	Quantity despatched into the interior (excluding Orissa).	Quantity despatched to Orissa.
1	2	3	4	5	6	7	8	9	10	11
	Mds.	Mds.	Mds.	Mds.	Mds.	Mds.	Mds.	Mds.	Mds.	Mds.
last quarter of 1900-1901...	89,898	1,34,690	56,464	52,650	1,99,972	10,08,782	5,57,263	.....	3,44,215	9,900
Ditto of 1901-1902 .	97,783	1,30,977	54,719	42,137	1,31,990	9,98,492	6,30,004		2,47,067	8,820
Ditto of 1902-1903 .	1,07,930	1,32,321	50,069	42,206	1,30,789	12,25,118	6,45,462	39,958	2,66,897	600

7. The quantity of salt despatched during the quarter by the East Indian Railway to stations beyond Buxar amounted to 1,620 maunds, against 810 maunds in the previous quarter, and 2,025 maunds in the corresponding quarter of the previous year.

8. The quantity of saltpetre removed from the refineries during the quarter on payment of duty amounted to 4,742 maunds, as compared with 7,379 maunds in the previous quarter, and 6,016 maunds in the corresponding quarter of the previous year.

9. The shipments of Liverpool salt during the quarter for the port of Calcutta, according to the published market reports, amounted to 26,740 tons. It is reported that no vessel for Calcutta with salt from Hamburg was afloat at the end of the quarter.

10. Table V shows the average wholesale prices per 100 maunds of Liverpool and other descriptions of salt during each fortnight of the quarter:—

TABLE V.

DESCRIPTION OF SALT.	Fortnight ending 15th April 1902.	Fortnight ending 30th April 1902.	Fortnight ending 15th May 1902.	Fortnight ending 31st May 1902.	Fortnight ending 15th June 1902.	Fortnight ending 30th June 1902.
1	2	3	4	5	6	7
	Rs. A. P.	Rs. A. P.	Rs. A. P.	Rs. A. P.	Rs. A. P.	Rs. A. P.
Liverpool *panga*	57 2 8	62 1 9	64 10 8	64 8 10	62 14 6	62 6 8
Hamburg *karkatch*	49 12 0	53 6 5	53 0 0	53 2 8	53 8 0	52 8 0
Muscat ditto	43 0 0	... ..	.....	.....	.....	... ..
Jeddah ditto	51 0 0	51 0 0	51 0 0	49 14 8	48 0 0	42 13 0
Bombay ditto	37 9 7	37 4 0	36 7 1	36 0 0	39 0 0	41 0 6
Aden crushed	44 1 10	44 1 2	44 12 9	44 7 0	42 5 4	38 11 7
Salif ditto	42 15 1	42 14 6	43 7 4	41 10 6	41 1 4	40 11 2

During the quarter the prices of Jeddah *karkatch*, Aden crushed and Salif crushed showed a tendency to fall. Those of Liverpool *panga* and Hamburg *karkatch* rose up till May and the 1st fortnight of June respectively; they then fell, though not to the level of the commencement of the quarter. The price of Bombay salt rose steadily during the quarter, with the exception of the month of May.

11. The following Table (VI) shows the quantity of sea-imported salt admitted into bond and cleared from bond and shipboard at the several outports and inland warehousing stations:—

TABLE VI.

PORT OR STATION.	Description of salt.	ADMITTED INTO BOND.		CLEARED.	
		First quarter of 1901-1902.	First quarter of 1902-1903.	First quarter of 1901-1902.	First quarter of 1902-1903.
1	2	3	4	5	6
		Mds.	Mds.	Mds.	Mds.
Chittagong	Liverpool *panga*	6,375	... ..	47,921	52,882
	Hamburg		55,053		30,395
Narayanganj ...	Fine white Cheshire, Middlesborough, &c.	1,58,085	1,24,560	1,44,391	1,19,460
	Hamburg		7,000		5,700
	Aden crushed		.....		3,625
Khulna	Fine white Cheshire	3,090	.....	3,050	... ..
Chandbali	Ditto and Aden crushed ...	18,500	13,020	12,495	10,862
Bhairab Bazar ...	Ditto and Middlesborough	51,500	35,326	30,640	39,525
Jhalakati	Ditto ditto &c.	1,26,650	1,00,223	1,23,687	1,15,688
	Aden crushed		11,000		3,506
	Rawayah crushed		.....		2,756
Ashuganj	Fine white Middlesborough and Cheshire.	.....	10,000	.....	11,202
Dacca	Fine white Middlesborough	... ..	5,460	.....	2,650
	Total ...	3,64,200	3,61,641	3,62,184	4,14,251

No transactions in sea-imported salt have been reported for the quarter from Cuttack and Puri.

WEATHER AND CROP REPORT.

For the week ending the 25th August 1902.

Burdwan.—Rainfall at Sadar 3·42, Katwa 1·37, Raniganj 2·63. Weather cloudy with occasional showers. Transplantation going on, but more rain wanted. Fodder and water sufficient. Condition of cattle good. Common rice sells at 10½ seers per rupee.

Birbhum.—Rainfall at Sadar 2 25, Rampur Hât 0·51. Weather cloudy. Transplantation still continues. Sugarcane promising. Fodder sufficient. Common rice sells at 12 seers per rupee.

Bankura.—Rainfall at Sadar 1·67. Recent rain has done some good to paddy Sugarcane doing well. Fodder and water sufficient. Common rice sells at 12 seers a rupee.

Midnapore.—Rainfall at Sadar 2·89, Contai 1·47, Tamluk 2·38, Ghatal 1·15. Weather hot and rainy. Transplantation of *aman* going on. Agricultural prospects good. Fodder and water sufficient. Common rice sells as follows:—

	Srs. ch.	
Sadar	12 12	per rupee.
Contai	12 0	
Ghatal	12 0	
Tamluk	11 12	

Hooghly.—Rainfall at Sadar 1·09, Serampore 1·93, Arambagh 1·57. Weather seasonable. Transplantation of *aman* still continues. Harvesting of *aus* commenced. Prospect of standing crops good. Fodder and water sufficient. Common rice sells as follows:—

	Srs. ch.	
Sadar	10 0	per rupee.
Serampore	10 5	
Arambagh	12 0	

Howrah.—Rainfall at Sadar 1·61, Ulubaria 1·34. Fall general except on the 22nd instant on which date it was recorded only at Ulubaria. Transplantation of *aman* paddy still going on. Harvesting of *aus* has commenced. Agricultural prospects hopeful. Fodder and water-supply sufficient. No cattle-disease. Average price of common rice is 11 seers per rupee throughout the district.

24-Parganas.—Rainfall at Sadar 4·66, Barasat 1·30, Basirhat 0·81, Diamond Harbour 1·68. Weather hot and cloudy. State of standing crops good, but more rain is wanted in all the subdivisions, especially in Diamond Harbour subdivision, where rainfall of the season has been insufficient. Prospect fair. *Aus* and jute being harvested and steeped; transplantation of *aman* continues. Common rice sells at 11 seers per rupee. In Bhangar and the adjoining thanas a kind of insect locally known as "Madhupoka" is said to have damaged the *aus* paddy to the extent of two annas. Condition of cattle good. Supply of fodder and water sufficient.

Nadia.—Rainfall at Sadar 1·09, Ranaghat 1·41, Chuadanga 1·63, Meherpur 0·58, Kushtia 0·50. Harvesting of *aus* and transplantation of *aman* paddy still going on. Prospects of standing crops good. Fodder and water sufficient. No cattle-disease reported. Common rice sells as follows:—

	Srs. ch.	
Sadar	12 8	per rupee.
Ranaghat	11 0	
Chuadanga	11 0	
Meherpur	13 8	
Kushtia	11 10	

Murshidabad.—Rainfall at Sadar 3·26, Kandi ·16, Jangipur 3·12, Lalbagh 12·32. Weather seasonable. Transplantation of *aman* and harvesting of *aus* still going on. Prospect of sugarcane and jute good. No cattle-disease. Fodder and water sufficient. Common rice sells as follows:—

	Srs. ch.	
Sadar	11 8	per rupee.
Kandi	12 0	
Jangipur	12 0	
Lalbagh	11 0	

Jessore.—Rainfall at Sadar 1·38, Jhenida 0·34, Magura 0·96, Narail 0·90, Bangaon 2·67. Weather hot and cloudy with slight rain. More rain wanted. Prospects of crops generally fair. *Aus* being harvested. Fodder and water sufficient. Cattle-disease reported from Muhammadpur in Magura subdivision. Common rice sells at 12 seers per rupee; only at Narail at 10¾ seers.

Khulna.—Rainfall at Sadar 1·45, Bagerhat 2·56, Satkhira 1·53. Weather seasonable. Transplantation of *aman* and harvesting of *aus* continue. Fodder and water sufficient. Cattle-disease reported from Paikgachha and Asasuni. Common rice sells as follows:—

	Srs.	ch.	
Sadar	11	4	} per rupee
Bagerhat	12	0	
Satkhira	10	8	

Rajshahi.—Rainfall at Sadar 1·27, Nator 1·04, Naugaon 1·18. Weather seasonable. Prospects of standing rice good. Jute about 75 per cent. crop. Transplantation of *aman* and harvesting of *bhadoi* going on. Common rice selling at 12 seers per rupee.

Dinajpur.—Rainfall at Sadar 0·20. Fall in the district scattered, maximum 3·07. Weather seasonable. Standing crops good. Transplanting of winter rice and steeping of jute continue. No cattle-disease. Fodder and drinking-water plentiful. Rice selling at 11 seers per rupee.

Jalpaiguri.—Rainfall at Sadar 3·19, Alipore Duars 3·64. Fall moderate. Weather seasonable. Transplantation of *haimanti* and harvesting of *bhadoi* paddy continue. Cutting of jute commenced. Common rice sells at 11 seers a rupee. Fodder and water sufficient. Cattle-disease prevails in two thanas in Sadar subdivision.

Darjeeling.—Rainfall at Sadar 3·13, Kurseong 7·34, Siliguri 6·90. Weather seasonable. *Hills*—Maize being harvested, *chota* and *bara marua*, *bhadoi* and *haimanti dhan* doing well. *Terai*—Transplanting of *haimanti* paddy and reaping of jute going on. Coarse rice sells as follows:—

	Srs.	ch.	
Hills	8	0	} per rupee.
Terai	10	0	

Maize sells at Darjeeling at 18 seers and at Kalimpong at 25 seers per rupee.

Rangpur.—Rainfall at Sadar 1·90. Gaibanda 0·78, Kurigram 1·35, Nilphamari 0·95. Weather very hot. Transplantation of *aman* and cutting and steeping of jute going on. Flood water subsiding slowly in Gaibanda. No serious damage to crop done, but people are still feeling inconvenience. Common rice sells at 10½ seers per rupee.

Bogra.—Rainfall at Sadar ·84. Fall general. Weather hot and cloudy. Cutting of *aus* and jute and transplantation of *aman* going on. Prospects fair. Fodder and water sufficient. Common rice sells at 12 seers per rupee.

Pabna.—Rainfall at Sadar 0·98, Sirajganj 1·56. Fall general. Weather rainy and hot. Prospects of standing crops fair. Fodder and water sufficient. No cattle-disease. Common rice sells at 10 seers per rupee.

Dacca.—Rainfall at Sadar ·4, Manikganj 1·55, Munshiganj ·4, Narayanganj ·53. Prospects of crops fair. Weather seasonable. Fodder available. No cattle-disease. Common rice sells at 11 seers per rupee.

Mymensingh.—Rainfall at Sadar 0·45, Jamalpur 3·36, Kishorganj 2·68, Netrokona 6·87, Tangail 0·76. Weather seasonable. Harvesting of *aus* and jute and transplantation of *aman* going on. Fodder and water sufficient. No cattle-disease. Common rice sells as follows:—

	Srs.	ch.	
Sadar	10	0	} per rupee.
Kishorganj	10	4	
Jamalpur	11	10	
Netrokona	12	0	
Tangail	10	4	

Faridpur.—Rainfall at Sadar 1·90, Goalundo 1·40, Madaripur 0·61. Weather sultry State and prospects of *aman* paddy good. Harvesting of *aus* is nearly finished. Cutting of jute continues. Common rice sells at 10½ seers a rupee. Fodder sufficient.

Backergunge.—Rainfall at Sadar 1·47. Fall general. Weather squally. Prospects of *bhadoi* crops poor. *Rabi* good. Cattle-disease at Matbari and Tuzamuddin thana. Fodder sufficient. Common rice sells at 11 seers (*aman*) and 14 seers (*aus*) per rupee.

Tippera.—Rainfall at Sadar 1·15, Brahmanbaria ·73, Chandpur 1·37. Weather seasonable. Prospects of standing crops good. Harvesting of *aus* and jute, and transplantation of *aman* continues. Fodder and water sufficient. No cattle-disease. Common rice sells at 13 seers per rupee.

Noakhali.—Rainfall at Sadar 7·33. Weather seasonable. Transplantation of *aman* continues. *Aus* being harvested. Water sufficient. Fodder not so. No cattle-disease. Common rice sells at Sadar at 11 seers per rupee. Feni report not received.

Chittagong.—Rainfall at Sadar 0·35, Cox's Bazar report not received. *Aus dhan* is being reaped. *Aman dhan* is being sown. Fodder and water sufficient. Common rice selling at 12 seers 11 chitaks per rupee.

Chittagong Hill Tracts.—Rainfall at Sadar ·96. Weather fine but showery. *Joom* paddy being harvested in the north. Prospects of winter rice crop favourable. Cotton crop promising. No cattle-disease. Common rice sells at 12 seers per rupee.

Patna.—Rainfall at Sadar 1·24, Barh 2·75, Bihar 0·03, Dinapore 2·30, Bikram 2·99, Weather hot and cloudy. Rain very urgently wanted. Prospects of Indian-corn good. Transplantation of paddy continues in low lands. No cattle-disease. Fodder and water sufficient. Common rice sells as follows :—

	Srs.	ch.	
Patna	11	0	per rupee.
Barh	11	8	
Bihar	10	0	
Dinapore	12	8	

Gaya.—Rainfall at Sadar 0·77, Nawadah 3·13, Jahanabad 1·66, Aurangabad 0·19. Weather rainy and hot. *Bhadoi* and sugarcane continue good. Transplantation of paddy going on. More rain wanted for it. Fodder and water for cattle ample. Average price of common rice is 11 seers 2 chitaks per rupee.

Shahabad.—Rainfall at Sadar 1·73, Buxar 0·55, Bhabhua 0·85, Sasaram 1·42, Dehri 1·22. Weather hot. Paddy being transplanted. More rain wanted. Sugarcane and *bhadoi* doing well. Fodder and water abundant. No cattle-disease. Rice sells at Sadar at 11 seers a rupee.

Saran.—Rainfall at Sadar 2·63, Siwan 1·98, Gopalganj 1·32. Weather seasonable. Standing crops doing fairly well. More rain urgently wanted. Fodder and water sufficient. No cattle-disease. Common rice sells at 11½ seers per rupee.

Champaran.—Rainfall at Sadar 4·23, Bettiah 2·26. Weather hot and cloudy. Harvesting of *bhadoi* continues. Some riparian crops destroyed by floods in the Sikram and Bagmati. Transplantation of *aghani* paddy approaching completion. Cattle-disease reported. Fodder and water sufficient. Common rice sells at 13½ seers and maize at 22 seers per rupee.

Muzaffarpur.—Rainfall at Sadar 1·22, Hajipur 2·25, Sitamarhi 5·32. Weather cloudy occasionally. Transplantation of paddy nearly completed. Prospects fair except in Sitamarhi subdivision, where *bhadoi* crops mostly damaged by flood water not subsided. Fodder and water sufficient. Prices are—Common rice 11½ seers and maize 20½ seers a rupee.

Darbhanga.—Rainfall at Sadar 2·34, Samastipur 2·56, Madhubani 1·40. Transplantation of paddy in progress. Flood subsided. Paddy and *makai* somewhat damaged on low land. Sugarcane doing well. Fodder and water sufficient. Cattle-disease is reported from Samastipur and Warisnagar thanas. Common rice sells as follows :—

	Srs.	ch.	
Sadar	12	9	per rupee.
Samastipur	12	0	
Madhubani	11	11	

Monghyr.—Rainfall at Sadar 1·81, Begusarai ·37, Jamui 4·80. Weather seasonable. Transplantation of paddy continues. Harvesting of *china*, *shama* and *kauni* going on. *Bhadoi* crops and sugarcane doing well. Prospects of standing crops good. Cattle-disease reported in a few villages from Begusarai thana. Fodder and water sufficient. Common rice sells at 11½ seers per rupee; at Jamui at 11 seers.

Bhagalpur.—Rainfall at Sadar 0·78, Banka 0·46, Madhipura 0·69, Supaul 0·81. Weather rainy. Flood in the Kosi has damaged standing crops in Madhipura, Kishanganj and Pratapganj. Transplantation of winter rice going on. More rain wanted and *marua* being harvested. Fodder and water sufficient. Common rice sells as follows :—

	Srs.	ch.	
Sadar	11	6	per rupee.
Banka	11	14	
Madhipura	14	0	
Supaul	15	0	

Purnea.—Rainfall at Sadar 0·22, Kishanganj 2·95, Araria 1·19. Fall general, but scanty at the Sadar. *Bhadoi* and jute are being harvested. Transplantation of *aghani* going on. No cattle-disease. Fodder and water sufficient. Common rice sells at 11 seers per rupee; at Araria 13 seers.

Malda.—Rainfall at Sadar 1·16, Chanchal ·22, Sibganj ·30, Gajol nil. Weather very hot and cloudy. Harvesting of *bhadoi* and transplantation of winter rice finished except in one or two places. Cutting of jute not yet finished. No cattle-disease. Fodder and water sufficient. Common rice sells at 12 seers per rupee.

Sonthal Parganas.—Rainfall at Sadar 2·42, Deoghur 0·12, Godda 0·22, Jamtara 1·41, Pakaur 1·90, Rajmahal 0·29. Weather hot and cloudy. Transplantation of paddy nearly finished. Indian-corn being harvested. Fodder and water sufficient. Rice sells at 12 seers per rupee in the Sadar; Deoghur report not received.

Cuttack.—Rainfall at Sadar 6·45. Fall general. Weather cloudy. *Sarad* being weeded and transplanted. Early *beali* ripening and in places being cut. Late *beali* in ears. Prospects on the whole fair. Slight cattle-disease in parts. Fodder and water sufficient. Common rice sells at 13 seers 2 chitaks at Sadar.

Balasore.—Rainfall at Sadar 3·98. Fall general. *Beali* flowering. *Sarad* being transplanted and weeded. Prospects good. Standing crops thriving. Rice sells at 13 and 16 seers per rupee at Sadar and Bhadrak respectively. Fodder and drinking-water sufficient.

Angul.—Rainfall at Sadar 1·33, Tikerpara 2·42, Bissipara 2·10. Weather rainy. Transplantation and weeding of winter paddy going on. Common rice sells at 11¼ and 10½ seers per rupee at Sadar and Khondmals respectively.

Puri.—Rainfall 5·78. Weather cyclonic; it is general throughout the district. Weeding, transplanting and puddling of winter rice paddy in progress. *Bhadoi* paddy and *mundua* are ripening in places. Outturn of *bhadoi* paddy and *mundua* is expected to be cent. per cent. Sugarcane and other miscellaneous crops doing well. Fodder and water-supply sufficient. Common rice sells at 14 seers 7 chitaks per rupee. Cattle-disease at places.

Hazaribagh.—Rainfall at Sadar 0·97, Giridih ·67. Fall not general. Sugarcane doing well. Transplantation going on. Rain wanted. Fodder and water sufficient. Common rice sells at 11½ seers per rupee. Cattle-disease reported from one thana.

Ranchi.—Rainfall at Sadar 2·69. Fall general. Weather seasonable. Transplantation of paddy nearly finished. Harvesting of *gundli* continues. Cattle-disease reported from several thanas. Fodder and water sufficient. Common rice selling at 13½ seers per rupee.

Palamau.—Rainfall at Sadar 2·10. Weather cloudy. More rain urgently wanted for paddy transplantation. *Bhadoi* suffered a little for want of rain. Sugarcane doing well. No cattle-disease. Fodder and water sufficient. Prices at Sadar—Rice 9 seers 9 chitaks, maize 12 seers 6 chitaks.

Manbhum.—Rainfall at Sadar 2·43, Gobindpur 1·97. Fall not general. Weather seasonable. More rain still wanted. Prospects of crops on ground good. Transplantation of winter rice continues. Fodder and water sufficient. Cattle-disease not reported. Average price of common rice at Sadar is 12 seers 3 chitaks and at Gobindpur 11 seers per rupee.

Singhbhum.—Rainfall 3·21. Prospect of crop favourable. Average price of rice is 12¾ seers in the district; at Chaibassa 12 seers per rupee.

General Summary.—Rainfall during the week was general and moderately heavy at places, but the districts of Burdwan, 24-Parganas, Jessore, Patna, Gaya, Shahabad, Saran, Bhagalpur, Hazaribagh, Palamau and Manbhum are in need of more rain. Slight damage to crops by floods reported from parts of Rangpur and Champaran: floods in the Sitamarhi subdivision of the Muzaffarpur district have damaged considerably the *bhadoi* crops, and in the Darbhanga district have done some damage to the paddy and *makai* on low land: damage from floods is also reported from the district of Bhagalpur. Harvesting of early rice and jute is still going on, and transplantation of winter rice is approaching completion. Prospects fair. Cattle-disease reported from 10 districts. Fodder and water generally sufficient. The price of common rice has risen in 9 districts, fallen in 9, and is stationary in the rest (29).

By order of the Lieutenant-Governor of Bengal,

W. C. MACPHERSON,

Offg. Secretary to the Govt. of Bengal,

REVENUE DEPARTMENT,

The 26th August 1902.

PRICES-CURRENT (retail) of Food-grains and Salt in the Head-

QUANTITIES PER RUPEE IN

Number.	DISTRICTS.	WHEAT.			BARLEY.			RICE, COMMON.			JOWAR OR CHOLUM (*Sorghum Vulgare*).		
		Present return.	Next preceding return.	Corresponding return of last year.	Present return.	Next preceding return.	Corresponding return of last year.	Present return.	Next preceding return.	Corresponding return of last year.	Present return.	Next preceding return.	Corresponding return of last year.
	BENGAL.	S. Ch.	S. Ch.	S. Ch.	S. Ch.	S. Ch.	S. Ch.	S. Ch.	S. Ch.	S. Ch.	S. Ch.	S. Ch.	S. Ch.
BURDWAN DIVISION. 1	Burdwan ...	13 0	14 0	11 8	...	...	...	10 8	10 8	11 4	...	...	...
2	Birbhum ...	12 0	12 0	12 0	...	...	...	12 0	12 0	11 4	...	...	...
3	Bankura ...	12 0	12 0	11 0	...	...	...	12 0	12 3	12 0	...	...	...
4	Midnapore ...	10 0	10 0	9 0	...	...	...	11 8	12 0	10 10	...	...	...
5	Hooghly ...	10 0	10 0	10 0	...	...	...	9 4	9 4	9 4	...	...	...
6	Howrah ...	...	...	...	...	...	...	11 0	10 8	10 0	...	...	...
PRESIDENCY DIVISION. 7	24-Parganas ...	...	...	...	...	...	...	10 4	10 8	10 0	...	...	...
8	Calcutta ...	10 10	10 0	10 10	16 0	14 8	16 0	10 0	10 0	8 14	13 5	12 4	17 12
9	Nadia ...	15 8	15 8	14 0	20 0	17 0	15 12	11 0	11 0	11 7	...	...	...
10	Murshidabad ...	16 0	16 0	13 0	20 0	21 0	20 0	11 8	11 4	12 0	...	...	...
11	Jessore ...	10 0	10 0	10 0	10 10	10 0	10 0	12 14	11 12	11 8	...	...	...
12	Khulna ...	...	...	...	...	...	...	12 12	11 10	10 8	...	...	...
RAJSHAHI DIVISION. 13	Rajshahi ...	16 8	16 8	13 8	22 8	21 0	21 0	11 10	11 4	10 8	...	...	...
14	Dinajpur ...	15 0	12 14	13 0	...	...	21 0	12 9	12 0	10 12	...	...	...
15	Jalpaiguri ...	11 0	11 0	10 0	...	...	...	11 0	10 12	10 8	...	...	...
16	Darjeeling ...	...	...	...	...	...	...	9 8	9 8	9 0	...	...	...
17	Rangpur ...	10 8	10 8	9 0	...	...	...	10 8	11 0	9 0	...	...	...
18	Bogra ...	10 8	10 8	10 8	...	...	...	11 4	11 4	10 8	...	...	...
19	Pabna ...	15 12	15 12	15 0	26 0	26 4	22 8	12 6	11 4	*Aus.* 12 6	...	...	...
DACCA DIVISION. 20	Dacca ...	12 0	11 13	11 0	20 0	18 0	18 8	13 0	11 0	10 0	...	...	...
21	Mymensingh ...	11 0	12 0	9 0	12 8	13 0	11 0	11 0	11 0	9 0	...	...	...
22	Faridpur ...	16 8	16 8	11 6	20 0	22 0	16 0	12 0	12 0	11 7	...	...	...
23	Backergunge ...	...	...	...	...	...	...	10 8 *Aus.* 12 0	10 8	9 0 *Aus.* 12 0	...	...	...

A. In the subdivisions the retail prices of salt per rupee are—Kalna 11 seers 3 chitaks ; Katwa 11 seers 12 chitaks, Ramganj 10½ seers.
B. At Rampur Hat the retail price of salt is 11¼ seers per rupee.
C. At Vishnupur the retail price of salt is 9¾ seers per rupee.
D. In the subdivisions the retail prices of salt per rupee are—Contai 10 seers ; Tamluk 11 seers ; Ghatal 11 seers 7 chitaks.
E. In the subdivisions the retail prices of salt per rupee are—Serampore 10½ seers ; Arambagh 10 seers 10 chitaks.
F. At Ulubaria the retail price of salt is 10 seers 10½ chitaks per rupee.
G. In the marts in the interior of the district the retail prices of salt per rupee are—Chetla 10 seers 10 chitaks ; Barasat 11 seers ; Baduria 11 seers ; Moraghat 9 seers 13½ chitaks.
H. In the subdivisions the retail prices of salt per rupee are—Kushtia 10 seers ; Chuadanga 10 seers 10 chitaks (panga) ; Meherpur 10 seers (karkatch) ; Ranaghat 11 seers 4 chitaks (crushed).
I. In the subdivisions the retail prices of salt per rupee are—Lalbagh 11 seers ; Kandi 11 seers ; Jangipur 11 seers.

quarters Station Bazars of the Districts of Bengal on the 15th August 1902.

INDIAN-CORN OR MAIZE (*Zea mays.*)			ARHAR OR THUR CADJAN PEA. (*Cajanus indicus.*)			SALT.			WHOLESALE PRICES PER MAUND OF 40 SEERS. SALT.			DISTRICTS.	Number.	
Present return.	Next preceding return.	Corresponding return of last year.	Present return.	Next preceding return.	Corresponding return of last year.	Present return.	Next preceding return.	Corresponding return of last year.	Present return.	Next preceding return.	Corresponding return of last year.			
S. Ch.	S. Ch	S. Ch.	S. Ch.	S. Ch.	S. Ch.	S. Cl.	S. Ch.	S. Ch.	Rs. A. P.	Rs. A. P.	Rs. A. P.	BENGAL.		
...	...	...	12 0	12 0	12 0	A 11 4	11 4	11 4	3 4 0	3 4 0	3 10 0	Burdwan.	1	Burdwan Division.
...	...	...	15 0	16 0	8 0	B 11 6	11 6	10 8	3 8 0	3 8 0	3 10 6	Birbhum.	2	
...	...	...	12 0	11 0	10 8	C 11 0	10 8	Panga. 10 0	3 10 0	3 12 0	3 14 0	Bankura.	3	
...	...	...	...	..	8 0	D 10 8	10 8	Panga. 10 0	3 8 0	3 8 0	3 11 0	Midnapore.	4	
...	...	...	8 0	8 0	8 0	E 10 8	10 8	Crushed. 10 0	3 12 0	3 12 0	3 12 0	Hooghly.	5	
...	...	...	11 8	11 0	10 0	F 10 8	10 8	Panga. 10 8	3 12 0	3 12 0	3 10 0	Howrah.	6	
...	...	...	11 12	12 4	10 12	G 10 10	10 10	Panga. 10 11	3 4 9	3 4 6	3 9 0	24-Parganas.	7	Presidency Division.
16 13	...	13 0	9 6	9 0	8 14	11 0	11 0	Panga. 11 0	3 6 0	3 6 0	3 8 0	Calcutta.	8	
...	...	...	11 4	11 4	8 14	H 11 13	12 4	Panga. 11 0	3 5 0	3 4 0	3 10 0	Nadia.	9	
...	...	...	12 0	12 0	9 0	I 11 0	11 0	Karktoh. 11 0	3 6 6	3 6 6	3 7 0	Murshidabad.	10	
...	...	...	17 0	16 0	10 8	J 10 0	9 8	Panga. 9 8	3 12 0	3 12 0	3 14 0	Jessore.	11	
...	...	...	10 0	8 0	8 0	K 10 0	10 0	10 0	3 12 0	3 12 0	3 12 0	Khulna.	12	
...	...	...	12 12	12 12	13 8	L 10 5	10 5	9 12	3 13 4	3 13 4	4 0 0	Rajshahi.	13	Rajshahi Division.
...	...	...	10 12	12 0	9 9½	M 10 8	10 8	Panga. 10 0	3 12 0	3 12 0	4 0 0	Dinajpur.	14	
...	...	...	...	11 0	9 8	N 10 0	10 0	Panga. 9 12	3 10 0	3 11 0	3 13 0	Jalpaiguri.	15	
22 0	18 0	22 0.	6 8	6 8	8 0	O 8 8	8 8	Rora. 8 8	4 10 0	4 9 0	4 10 0	Darjeeling.	16	
						8 4	8 0	Panga. 8 8	4 11 0	4 12 0	4 12 0			
13 0	12 0	11 8	10 0	9 0	6 12	P 10 8	10 8	Panga. 9 0	3 12 0	3 12 0	4 0 0	Rangpur.	17	
...	...	...	13 8	13 8	12 0	10 8	10 8	9 12	3 10 8	3 10 8	4 1 4	Bogra.	18	
...	...	...	9 0	9 0	7 8	Q 10 8	10 8	Panga. 9 12	3 12 0	3 12 0	3 13 6	Pabna.	19	
...	...	...	10 0	11 0	9 0	R 11 0	11 0	Panga. 10 0	3 10 0	3 10 0	4 0 0	Dacca.	20	Dacca Division.
...	...	...	8 8	8 8	8 0	S 10 0	10 0	Panga. 9 8	3 12 0	3 12 0	4 3 0	Mymensingh.	21	
...	...	...	13 0	13 0	8 0	T 10 10	10 10	10 0	3 12 0	3 12 0	4 0 0	Faridpur.	22	
...	...	...	...	...	...	U 10 0	10 0	Panga. 10 0	3 10 0	3 10 0	3 10 0	Backergunge.	23	

J. In the subdivisions the retail prices of salt per rupee are—Jhenida 10½ seers; Magura 9¾ seers; Narail 10 seers Bangaon 10 seers 10 chitaks.
K. In the subdivisions the retail prices of salt per rupee are—Bagerhat 10 seers; Satkhira 11 seers.
L. In the subdivisions the retail prices of salt per rupee are—Nator 10 seers 8 chitaks; Naugaon 9¾ seers.
M. No report from subdivision.
N. At Alipur Duars the retail price of salt is 8 seers per rupee.
O. The retail price of salt (panga) at Kurseong is 8 seers per rupee, Siliguri 9 seers.
P. In the subdivisions the retail prices of salt per rupee are—Gaibanda 10 seers; Kurigram 8 seers; Nilphamari 10 seers.
Q. At Sirajganj the retail price of salt is 11 seers 12 chitaks per rupee.
R. In the marts in the interior of the district the retail prices of salt per rupee are—Madanganj 11 seers 13 chitaks; Manikganj 9 seers; Mirkadim 11 seers 6 chitaks.
S. In the subdivisions the retail prices of salt per rupee are—Kishorganj 10 seers 11 chitaks; Jamalpur 10 seers; Tangail 9 seers; Netrokona 10 seers.
T. In the subdivisions the retail prices of salt per rupee are—Goalundo 10 seers; Madaripur 10½ seers (crushed).
U. In the subdivisions the retail prices of salt per rupee are—Pirojpur 10 seers; Patuakhali 9 seers, Bhola 10 seers.

PRICES-CURR ENT (retail) of Food-grains and Salt in the Head-quarters

Number.	DISTRICTS.	QUANTITIES PER RUPEE IN											
		WHEAT.			BARLEY.			RICE, COMMON.			JOWAR OR CHOLUM (*Sorghum Vulgare*).		
		Present return.	Next preceding return.	Corresponding return of last year.	Present return.	Next preceding return.	Corresponding return of last year.	Present return.	Next preceding return.	Corresponding return of last year.	Present return.	Next preceding return.	Corresponding return of last year.
BENGAL—*concluded.*		S. Ch.	S. Ch.	S Ch.	S. Ch	S. Ch.	S. Ch.	S. Ch.	S Ch	S. Ch.	S. Ch.	S. Ch.	S. Ch.
CHITTAGONG DIVISION.													
24	Tippera ..	...	...	...	...	...	...	12 0	12 0	*Aman* 8 3 *Aus* 10 10	...	...	...
25	Noakhali ...	...	...	...	...	...	...	11 0	11 0	9 4	...	...	...
26	Chittagong ...	...	...	...	...	...	...	12 14	12 14	11 8	..	...	...
BIHAR.													
PATNA DIVISION.													
27	Patna .	14 8	14 0	14 0	19 12	19 0	17 0	11 0	11 4	*White* ... *Raksa* 19 12	*White* 16 0 *Raksa* 24 0		17 0
28	Gaya ...	13 4	13 4	12 8	17 0	17 4	17 4	10 12	10 12	10 13	15 0	15 0	15 4
29	Shahabad .	13 0	13 0	12 8	18 0	16 0	14 0	11 0	11 0	10 0	...	...	...
30	Saran ...	14 4	15 0	12 0	19 0	19 0	17 0	11 8	11 8	12 0	...	...	...
31	Champaran ...	13 0	13 0	12 0	22 0 to 24 0	22 0	23 0	14 0	12 8	10 0	...	..	...
32	Muzaffarpur ..	14 0	13 8	11 0	19 0	19 0	18 0	11 8	11 8	11 0	...	...	...
33	Darbhanga ..	14 4	14 4	13 8	19 12	19 12	24 8	12 9	12 0	13 3	...	...	...
BHAGALPUR DIVISION.													
34	Monghyr ...	14 8	14 8	14 2	21 0	20 0	18 14	10 0	10 0	12 0	...	...	...
35	Bhagalpur ...	13 14	13 14	12 10	19 0	19 0	19 0	12 6	12 0	12 10	...	...	...
36	Purnea ...	14 0	12 0	15 0	...	...	...	10 0	9 0	12 0	...	...	...
37	Malda ...	...	16 0	13 0	...	...	...	11 8	11 0	10 8	...	...	...
38	Sonthal Parganas.	11 8	11 8	11 0	15 0	15 0	15 0	12 0	11 12	13 0	...	...	...
ORISSA.													
ORISSA DIVISION.													
39	Cuttack ...	11 13	12 7	10 8	...	...	...	13 2	13 2	12 12	...	...	...
40	Balasore ...	13 0	14 0	...	...	11 0	...	13 0	13 0	11 0 & 11 9	...	...	...
41	Angul ...	...	...	...	...	...	...	12 0	12 0	...	...	...	...
42	Puri	11 0	11 0	10 8	...	...	...	14 7	14 7	13 2	...	...	...
CHOTA NAGPUR.													
CHOTA NAGPUR DIVISION.													
43	Hazaribagh ...	10 12	11 0	10 0	14 8	14 8	15 5	11 8	11 0	11 0	...	...	...
44	Ranchi ...	7 4 to 10 8	7 4 to 10 0	8 0 to 10 0	14 0	14 0	14 0	14 0	14 0	12 4	...	...	...
45	Palamau ...	10 11	10 2	9 9	13 8	14 10	12 15	10 2	10 2	9 0	...	...	...
46	Manbhum ...	12 8	13 0	11 0	16 0	14 0	16 0	13 0	12 0	11 9	...	20 0	16 0
47	Singhbhum ...	11 0	11 0	10 0	...	...	...	12 0	12 0	13 0	...	...	...

V. In the subdivisions the retail prices of salt per rupee are—Chandpur 9 seers ; Brahmanbaria 10 seers.
W. At Feni the retail price of salt is 10 seers per rupee.
X. Return from Cox's Bazar not received.
Y. In the subdivisions the retail prices of salt per rupee are—Barh 11½ seers ; Dinapore 10½ seers ; Bihar 10 seers.
Z. In the subdivisions the retail prices of salt per rupee are—Jahanabad 10 seers ; Nawada 10 seers ; Aurangabad 11 seers.
a. In the subdivisions the retail prices of salt per rupee are—Buxar 11 seers ; Bhabua 10½ seers ; Sasaram 10¾ seers.
b. In the subdivisions the retail prices of salt per rupee are—Siwan 11 seers 6 chitaks ; Gopalganj (Mirganj) 12 seers 2 chitaks.
c. At Bettiah the retail price of salt is 10½ seers per rupee.
d. In the subdivisions the retail prices of salt per rupee are—Hajipur 10½ seers ; Sitamarhi 11 seers.
e. In the subdivisions the retail prices of salt per rupee are—Samastipur 10 seers ; Madhubani 10 seers 6 chitaks.
f. In the subdivisions the retail prices of salt per rupee are—Begusarai 10 seers ; Jamui 10 seers 8 chitaks.

CALCUTTA,
The 25th August 1902.

Station Bazars of the Districts of Bengal on the 15th August 1902—concld.

Indian-corn or Maize. (*Zea mays.*)			Arhar or Thur, Cadjan Pea. (*Cajanus Indicus.*)			Salt.			Wholesale prices per maund of 40 seers. Salt.			Districts	Number.	
Present return.	Next preceding return.	Corresponding return of last year.	Present return.	Next preceding return.	Corresponding return of last year.	Present return.	Next preceding return.	Corresponding return of last year.	Present return.	Next preceding return.	Corresponding return of last year.			
S. Ch.	S. Ch.	S. Ch.	S. Ch.	S. Ch.	S. Ch	S. Ch.	S. Ch.	S. Ch	Rs A. P.	Rs A. P.	Rs. A. P.	BENGAL—*concluded*		
...	...	...	...	...	...	V 9 0	9 0	9 0	Panga. 0 3 12 0	3 12 0	4 8 0	Tipperah.	24	Chittagong Division.
...	...	...	...	...	...	W 8 8	9 0	9 0	Panga. 0 4 4 0	4 2 0	4 8 0	Noakhali.	25	
...	...	...	8 0	8 0	8 8	X 10 0	10 0	9 6	Panga. 3 6 0	3 6 0	4 2 0	Chittagong.	26	
												BIHAR.		
21 0	18 0	16 0	18 0	17 12	15 0	Y 10 12	10 12	10 8	Panga. 3 10 0	3 10 0	3 12 0	Patna.	27	Patna Division.
18 0	17 12	15 0	15 0	15 0	11 12	Z 11 4	11 0	10 5	3 9 0	3 9 0	3 14 0	Gaya	28	
...	...	...	14 0	12 0	11 0	[a] 10 0	10 0	10 0	4 0 0	4 0 0	4 0 0	Shahabad.	29	
20 0	20 0	15 8	14 0	15 0	12 0	[b] 11 0	11 8	10 8	Panga. 3 10 2	3 11 0	3 10 0	Saran.	30	
22 0	22 0	...	22 0	23 0	19 0	[c] 10 8	10 8	10 0	3 13 0	3 13 0	4 0 0	Champaran.	31	
20 0	19 0	16 0	14 0	14 0	13 0	[d] 10 0	10 0	9 12	Panga. 4 0 0	4 0 0	4 0 0	Muzaffarpur	32	
22 0	23 1	...	14 4	14 4	13 3	[e] 11 0	11 0	11 0	3 10 0	3 10 0	3 10 0	Darbhanga.	33	
20 0	18 0	16 12	11 0	14 0	17 15	[f] 10 8	10 8	10 8	3 14 6	3 12 0	3 6 6	Monghyr	34	Bhagalpur Division.
19 0	19 0	16 8	12 10	12 10	10 2	[g] 10 12	10 12	10 2	Panga. 3 10 0	3 10 0	3 15 0	Bhagalpur.	35	
...	...	...	10 0	9 0	8 0	[h] 10 0 [i] 10 0	10 0 10 0	10 0 9 8	4 0 0 Panga. 3 14 0	3 14 0 3 14 0	4 0 0 4 0 0	Purnea.	36	
...	...	...	13 0	12 0	10 0	9 8	9 8	9 8	Karkatch. 4 0 0	4 0 0	4 0 0	Malda.	37	
...	15 0	15 0	19 0	19 0	11 0	[j] 10 8	10 8	10 0	3 10 0	3 10 0	3 12 0	Santhal Parganas.	38	
									Karkatch.			ORISSA.		
...	...	...	14 12	15 12	12 7	[k] 11 0	11 0	12 0	3 0 0	3 4 0	3 0 0	Cuttack.	39	Orissa Division.
...	...	...	10 0	10 0	9 0	[l] 11 4	11 0	11 0	Panga. 3 7 0	3 7 6	3 11 0	Balasore.	40	
...	...	...	14 8	16 0	...	[m] 8 0	8 0	...	1 ...	...	...	Angul.	41	
...	...	...	9 3	9 3	7 4	[n] 13 0	13 4	13 8	3 1 0	3 0 0	2 15 0	Puri	42	
												CHOTA NAGPUR.		
14 8	14 8	14 0	9 8	10 0	9 4	8 8	8 8	9 0	4 7 0	4 7 0	4 7 0	Hazaribagh.	43	Chota Nagpur Division.
...	...	18 12	5 8 to 6 8	5 8 to 6 8	6 8 to 8 0	9 12	9 12	9 0	Panga. 4 2 0	4 2 0	4 6 0	Ranchi.	44	
12 15	14 12	11 0	11 4	10 11	10 2	9 9	9 9	8 7	1 ...	...	...	Palamau.	45	
...	...	...	12 0	11 8	10 0	[o] 10 12	10 0	9 0	3 9 0	3 10 0	4 0 0	Manbhum.	46	
...	...	...	10 0	10 0	8 0	9 0	9 0	9 0	4 4 0	4 4 0	3 8 0	Singhbhum.	47	

g. In the subdivisions the retail prices of salt per rupee are—Banka 10 seers; Madhipura 10 seers; Supaul 10 seers.
h. In the subdivisions the retail prices of salt per rupee are—Kishanganj 9 seers; Arraria 9 seers.
i. At Balia Nawabganj the retail price of salt is 10 seers per rupee.
j. In the subdivisions the retail prices of salt per rupee are—Deoghur 10 seers (panga); Godda 10 seers; Jamtara 11 seers; Pakaur 11 seers (karkatch); Rajmahal 11 seers.
k. In the subdivisions the retail prices of salt per rupee are—Jajpur 10 seers (panga); Kendrapara 10 seers (panga).
l. At Bhadrak the retail price of salt is 10½ seers per rupee.
m. In the marts in the interior of the district the retail prices of salt per rupee are—Sankhpur 9 seers; Bisipara 9 seers.
n. At Khurda the retail price of salt is 13 seers per rupee.
o. At Gobindpur the retail price of salt is 10 seers 10 chitaks per rupee.

Published for general information.

W. C. MACPHERSON,

Offg. Secretary to the Govt. of Bengal.

PRICES-CURRENT (wholesale) of Food-grains, Firewood, &c.,

Number.	Marts.	Rice (best sort).			Common rice (*mota chaul*).			Wheat (*Triticum sativum*).			Barley (*Hordeum vulgare*).		
		Present return.	Next preceding return.	Corresponding return of last year.	Present return.	Next preceding return.	Corresponding return of last year.	Present return.	Next preceding return.	Corresponding return of last year.	Present return.	Next preceding return.	Corresponding return of last year.
1	2	3	4	5	6	7	8	9	10	11	12	13	14
		Rs. A. P.	Rs. A. P.	Rs. A. P.	Rs. A. P.	Rs. A. P.	Rs. A. P.	Rs. A. P.	Rs. A. P.	Rs. A. P.	Rs. A. P.	Rs. A. P.	Rs. A. P.
1	Calcutta ...	5 4 0	5 4 0	5 4 0	3 12 0	3 12 0	4 4 0	3 8 0	3 12 0	3 8 0	2 6 0	2 8 0	2 6 0
2	Burdwan ...	5 0 0	5 0 0	4 13 6	3 11 6	3 12 0	3 8 6	...	...	...	...	...	...
3	Midnapore ...	4 0 0	4 0 0	4 4 0	3 8 0	3 5 0	3 3 0	...	...	...	...	...	...
4	Pabna ...	6 10 0	6 10 0	6 2 0	3 8 6	3 10 9	3 3 0	2 8 6	2 8 6	2 10 6	...	...	...
5	Rangpur ...	5 0 0	5 0 0	6 8 0	3 12 0	3 8 0	4 4 0	3 12 0	3 12 0	4 0 0	...	...	...
6	Dacca ...	4 2 0	4 4 0	4 9 0	3 4 0	3 5 0	4 0 0	3 4 0	3 6 0	3 8 0	2 0 0	2 2 0	2 12 0
7	Chittagong ...	...	...	...	3 4 0	3 4 0	3 6 0	...	...	...	...	...	...
8	Patna ...	3 12 6	3 11 0	4 7 0	3 10 0	3 8 0	3 6 0	2 12 0	2 12 0	2 12 0	2 0 0	2 1 0	2 5 6
9	Muzaffarpur ...	5 0 0	5 0 0	4 7 0	3 5 0	3 5 3	3 5 3	2 12 0	2 13 9	3 5 3	2 0 0	2 0 0	2 1 6
10	Bhagalpur ...	4 3 0	4 3 0	3 15 0	3 8 0	3 8 0	3 2 6	2 14 0	2 14 0	3 1 0	2 0 6	2 0 6	2 1 9
11	Cuttack ...	4 4 0	4 4 0	3 15 0	2 13 0	2 13 0	3 0 0	3 3 0	3 0 0	3 9 0	...	...	...
12	Ranchi ...	4 10 9	4 10 9	4 8 0	2 13 6	2 13 6	3 4 0	3 13 0 to 5 8 0	4 0 0 to 5 8 0	3 13 0 to 5 0 0	2 13 6	2 13 6	2 13 9

Calcutta,

The 25th August 1902.

Juar or cholum (*Sorghum vulgare*).			Bajra or cumbu (*Pennisetum typhoideum*).			Marua or ragi (*Eleusine coracana*).			Gram, Chana, Chola, Kadalay, or Sunaga (*Cicer arietinum*).		
Present return.	Next preceding return.	Corresponding return of last year.	Present return.	Next preceding return.	Corresponding return of last year.	Present return.	Next preceding return.	Corresponding return of last year.	Present return.	Next preceding return.	Corresponding return of last year.
15	16	17	18	19	20	21	22	23	24	25	26
Rs. A. P.	Rs. A. P.	Rs. A. P.	Rs. A. P.	Rs. A. P.	Rs. A. P.	Rs. A. P.	Rs. A. P.	Rs. A. P.	Rs. A. P.	Rs. A. P.	Rs. A. P.
2 12 0	3 0 0	2 2 0	2 8 0	3 0 0	4 0 0	...	...	...	2 8 0	2 12 0	2 12 0
...	...	...	...	...	...	...	...	...	2 7 0	2 8 0	2 12 0
...	...	...	...	...	...	...	...	...	2 10 0	2 10 0	3 0 0
...	...	...	...	...	...	...	...	...	2 10 6	2 10 6	3 5 0
...	...	...	...	...	...	...	...	...	2 8 0	2 6 0	3 2 0
...	...	...	...	...	...	...	...	...	4 0 0	3 12 0	3 6 0
...	...	...	...	...	...	...	...	...	3 4 0	3 4 0	3 12 0
... White.	2 7 0	2 5 6	...	...	...	...	...	...	2 0 6	2 0 0	2 10 0
2 0 0 Rakse.	1 10 0		...	...	...	...	...	...			
...	...	...	...	...	...	1 13 0	1 13 0	...	2 0 0	2 0 0	2 8 0
...	...	...	...	...	...	...	...	...	2 4 0	2 4 0	2 10 0
...	...	...	...	...	...	...	...	...	2 7 0	Biri or kalai. 2 7 0	2 13 0
...	...	...	...	...	...	...	...	...	3 1 0	2 13 6 to 3 0 0	3 5 3 to 3 10 0

PRICE PER MAUND OF

Indian-corn or maize (*Zea mays*).			Arhar dal or Thur—Cadjan pea (*Cajanus indicus*).			Linseed.			Mustard and Rapeseed.		
Present return.	Next preceding return.	Corresponding return of last year.	Present return.	Next preceding return.	Corresponding return of last year.	Present return.	Next preceding return.	Corresponding return of last year.	Present return.	Next preceding return.	Corresponding return of last year.
27	28	29	30	31	32	33	34	35	36	37	38
Rs. A. P.	Rs. A. P.	Rs. A. P.	Rs. A. P.	Rs. A. P.	Rs. A. P.	Rs. A. P.	Rs. A. P.	Rs. A. P.	Rs. A. P.	Rs. A. P.	Rs. A. P.
2 4 0	...	2 12 0	4 0 0	4 4 0	4 4 0	6 12 0	7 0 0	7 4 0	4 12 0	5 0 0	5 4 0
...	...	...	3 3 0	3 3 0	3 14 6	...	...	...	4 12 0	4 8 0	5 1 0
									Black mustard.		
...	...	...	3 14 0	3 14 0	4 12 0	6 8 0	6 8 0	5 8 0	4 10 0 to 4 12 0	4 10 0 to 4 12 0	4 0 0 to 4 12 0
									Rapeseed.		
									4 14 0	4 14 0	...
...	...	...	4 5 0	4 5 0	5 5 0	4 8 0	6 4 0	6 0 0	6 4 0	4 8 0	5 9 0
0	3 0 0	3 4 0	4 0 0	4 8 0	5 4 0	...	...	...	4 8 0	4 8 0	5 8 0
...	...	...	4 0 0	3 8 0	4 0 0	...	...	...	...	...	...
—	...	...	4 8 0	4 8 0	5 8 0	...	...	...	4 8 0	4 8 0	5 8 0
1 14 0	2 3 0	2 7 0	2 3 0	2 4 0	2 10 0	5 12 0	5 0 0	6 10 0	4 0	4 3 6	5 0 0
1 15 8	2 0 0	2 6 9	2 10 6	2 10 6	2 15 3	...	...	...	...	...	...
									Rapeseed.		
2 0 6	2 0 6	2 7 0	3 2 0	3 2 0	3 15 0	6 0 0	6 0 0	...	4 6 0	4 6 0	5 3 0
									Mustard.		
									4 0 0	4 0 0	
...	...	...	2 10 0	2 7 0	3 0 0	...	...	...	4 4 9	4 0 9	4 1 3
...	...	...	6 2 6 to 7 4 4	6 2 6 to 7 4 4	5 0 0 to 6 2 6	6 10 0	6 10 0	5 0 0	5 0 0	5 0 0	5 0 0

40 STANDARD SEERS.

Til or jinjili seed.			Sugar (raw).			Cotton, cleaned.			Jute		
Present return.	Next preceding return.	Corresponding return of last year.	Present return.	Next preceding return.	Corresponding return of last year.	Present return.	Next preceding return.	Corresponding return of last year.	Present return.	Next preceding return.	Corresponding return of last year.
39	40	41	42	43	44	45	46	47	48	49	50
Rs. A. P.	Rs. A. P.	Rs. A. P.	Rs. A. P.	Rs. A. P.	Rs. A. P.	Rs. A. P.	Rs. A. P.	Rs. A. P.	Rs. A. P.	Rs. A. P.	Rs. A. P.
4 8 0	4 8 0	5 4 0	4 4 0	4 4 0	3 12 0	15 0 0	16 0 0	17 0 0	5 4 0	5 4 0	5 8 0
...	...	...	3 12 0	3 10 0	4 4 0	10 0 0	20 0 0	17 12 0	...	...	...
...	...	...	3 4 0 to 3 8 0	3 4 0 to 3 8 0	3 8 0 to 4 0 0	20 0 0	20 0 0	20 0 0	...	...	...
...	...	...	3 8 0	3 4 0	4 6 0	21 0 0	21 0 0	20 0 0	4 14 0	4 11 0	5 0 0
...	...	...	4 0 0	4 0 0	5 12 0	...	...	...	4 0 0	4 0 0	4 12 0
...	...	...	4 0 0	3 12 0	6 0 0	...	...	...	4 8 0	4 4 0	5 0 0
...	...	...	4 12 0	4 12 0	5 10 0	14 8 0	14 8 0	13 8 0	...	...	...
5 12 0	5 12 0	5 0 0	2 8 0	2 12 0	3 8 0	15 0 0	15 0 0	16 0 0	4 6 0	4 6 0	3 0 0
...	...	...	2 5 6	2 5 6	3 1 3	...	...	...	...	...	...
...	...	...	4 1 0	4 0 0	4 13 6	19 0 0	19 0 0	16 0 0	...	...	...
4 1 0	4 7 6	4 6 0	4 8 0	4 11 0	4 8 0	20 0 0	20 0 0	22 0 0	...	...	...
...	...	...	3 10 0 to 4 0 0	4 0 0	4 3 0 to 5 0 0	20 0 0	20 0 0	22 12 0	...	...	...

Ghi (clarified butter).			Tobacco leaf.			Hides (cow).			Grass.		
Present return.	Next preceding return.	Corresponding return of last year.	Present return.	Next preceding return.	Corresponding return of last year.	Present return.	Next preceding return.	Corresponding return of last year.	Present return.	Next preceding return.	Corresponding return of last year.
51	52	53	54	55	56	57	58	59	60	61	62
Rs. A. P.	Rs. A. P.	Rs. A. P.	Rs. A. P.	Rs. A. P.	Rs. A. P.	Rs. A. P.	Rs. A. P.	Rs. A. P.	Rs. A. P.	Rs. A. P.	Rs. A. P.
89 0 0	39 0 0	40 0 0	9 0 0	8 8 0	9 0 0	Per 100 pieces. 250 0 0	250 0 0	250 0 0	1 0 0	1 0 0	0 13 9
30 0 0	32 0 0	41 0 0	...	...	...	...	...	...	...	...	...
			Madhukhali.			Unclean hide per piece.					
30 8 0	31 8 0	41 0 0	5 8 0 to 6 8 0	5 8 0 to 6 8 0	5 8 0 to 7 8 0	1 0 0 to 2 8 0	1 0 0 to 2 8 0	1 0 0 to 2 2 0	...	...	...
			Pulta.			Cleaned hide per piece.					
						1 4 0 to 2 12 0	1 4 0 to 2 12 0	1 2 0 to 2 4 0			
58 0 0	53 0 0	53 0 0	6 8 0	6 12 0	7 0 0	...	...	...	...	...	...
36 0 0	33 0 0	42 0 0	10 0 0	10 0 0	9 0 0	...	...	...	0 2 6	0 2 6	0 2 6
						Per maund.					
40 0 0	40 0 0	45 0 0	7 8 0	7 8 0	9 0 0	25 0 0	25 0 0	25 0 0	0 3 0	0 3 0	0 3 0
						Per maund.					
33 0 0	33 8 0	42 0 0	10 0 0	11 0 0	12 12 0	16 8 0	16 4 0	18 4 0	...	...	...
30 0 0	30 0 0	36 0 0	3 8 0	3 8 0	3 0 0	...	...	...	0 4 0	0 5 0	0 4 0
29 1 6	29 1 6	35 9 0	...	8 0 0	8 0 0	...	...	...	...	...	...
32 0 0	32 0 0	38 8 0	8 0 0	8 0 0	...	...	...	...	...	...	...
						Per maund.					
33 12 0	34 8 0	45 0 0	4 4 0	4 4 0	4 4 0	25 0 0	25 0 0	25 0 0	0 7 0	0 7 0	0 8 6
						Per piece.					
32 0 0 to 37 3 10	32 0 0 to 37 3 0	36 0 0 to 40 0 0	6 10 0 to 13 5 3	6 10 0 to 13 5 3	6 10 6 to 13 0 0	1 0 0 to 2 0 0	1 4 0 to 2 8 0	1 0 0	0 4 0	0 4 0	0 4 0

in the undermentioned Marts of Bengal on the 15th August 1902.

Straw.			Juar stalks.			Prices per maund of 40 standard seers.									Marts.
						Iron.			Firewood.			Salt.			
Present return.	Next preceding return.	Corresponding return of last year.	Present return.	Next preceding return.	Corresponding return of last year.	Present return.	Next preceding return.	Corresponding return of last year.	Present return.	Next preceding return.	Corresponding return of last year.	Present return.	Next preceding return.	Corresponding return of last year.	
63	64	65	66	67	68	69	70	71	72	73	74	75	76	77	78
Rs. A. P.	Rs. A. P.	Rs. A. P.	Rs. A. P.	Rs. A. P.	Rs. A. P.	Rs. A. P.	Rs. A. P.	Rs. A. P.	Rs. A. P.	Rs. A. P.	Rs. A. P.	Rs. A. P.	Rs. A. P.	Rs. A. P.	
0 12 0	0 12 0	0 14 0	...	...	...	5 12 0	5 4 0	5 4 0	0 8 0	0 8 0	0 8 0	Panga. 3 6 0	3 6 0	3 8 0	1. Calcutta.
0 12 0	0 10 8	0 14 0	...	...	...	...	...	...	0 8 0	0 8 0	0 5 6	Crushed. 3 4 0	3 4 0	3 10 0	2. Burdwan.
0 4 8	0 4 8	0 10 8	...	...	...	3 12 0 to 4 4 0	3 12 0 to 4 4 0	4 0 0 to 5 0 0	0 4 0	0 4 0	0 4 0	3 8 0	3 8 0	3 11 0	3. Midnapore.
1 0 0	1 0 0	1 0 0	...	...	...	7 0 0	7 0 0	7 0 0	0 10 0	0 10 0	0 5 0	Panga. 3 12 0	3 12 0	3 3 6	4. Pabna.
0 7 0	0 7 0	0 7 0	...	...	...	7 0 0	7 0 0	6 0 0	0 5 0	0 5 0	0 5 0	Panga. 3 12 0	3 12 0	4 0 0	5. Rangpur.
...	...	...	...	...	...	5 0 0	5 0 0	6 0 0	0 5 3	0 5 3	0 5 3	Panga. 3 10 0	3 10 0	4 0 0	6. Dacca.
...	...	...	...	...	...	4 8 0	4 12 0	5 4 0	...	...	...	Panga. 3 6 0	3 6 0	4 2 0	7. Chittagong.
...	...	...	...	...	...	4 0 0	4 0 0	5 0 0	0 7 0	0 7 0	0 6 0	3 10 0	3 10 0	3 12 0	8. Patna.
...	...	...	...	...	...	5 11 6	5 11 6	5 11 6	0 4 0	0 4 0	0 4 0	4 0 0	4 0 0	4 0 0	9. Muzaffarpur.
...	...	...	...	...	...	5 0 0	5 0 0	5 6 0	0 5 9	0 5 9	0 5 9	3 10 0	3 10 0	3 15 0	10. Bhagalpur.
0 7 0	0 7 0	0 8 0	...	...	...	4 11 0	4 4 0	4 4 0	0 4 0	0 4 0	0 4 0	Karkatch. 3 0 0	3 4 0	3 0 0	11. Cuttack.
0 6 0 to 0 10 0	0 6 0 to 0 10 0	0 6 0 to 0 10 0	...	...	...	5 10 0	5 10 0	5 11 6	0 4 0	0 4 0	0 4 0	Panga. 4 2 0	4 2 0	4 6 0	12. Ranchi.

W. C. MACPHERSON,
Offg. Secretary to the Govt. of Bengal.

GOVERNMENT OF BENGAL, IRRIGATION DEPARTMENT.

Approximate return of traffic on the Circular and Eastern Canals for the week ending Saturday, the 23rd August 1902, as compared with the corresponding week of the previous year.

Nature of Cargo.	Week ending Saturday, the 23rd August 1902.			Week ending Saturday, the 24th August 1901		
	Number of boats.	Weight of cargo.	Tollage.	Number of boats.	Weight of cargo.	Tollage.
		Mds.	Rs.		Mds	Rs.
Rice and paddy	548	83,350	991	408	48,675	609
Jute	65	15,550*	236	69	13,050†	168
Firewood	69	36,575	556	52	27 050	408
Other articles	671	1,29,987	1,394	483	96,010	1,123
Total ...	1,353	2,65,462	3,177	1,012	1,84,785	2,308

* Weight by canal measurement, 16,412 maunds.
† Ditto ditto, 13,262½ ,,

BENGAL AND NORTH-WESTERN RAILWAY.

Statement of goods traffic for the month of April 1902 compared with the corresponding period in 1901.

Description of Goods.	1901.		1902.		Increase.		Decrease.		Explanation of fluctuations by the Traffic Manager.
	Tons.	Rs.	Tons.	Rs.	Tons.	Rs.	Tons.	Rs.	
I.—Apparel, including drapery, haberdashery, millinery, uniforms, accoutrements, boots and shoes.	30	290	50	468	20	178	.....	.....	
II.—Coal and coke carried for the Public and Foreign Railways.	8,008	13,635	10,788	19,045	2,780	5,410	.....	.....	Demand for brick-burning.
III.—Cotton—									
1. Raw	30	261	50	938	20	677	.....	.....	
2. Manufactured—									
(a) } Twist and yarn. { European	22	106	13	91	.....	.....	9	15	
(b) } { Indian ..	342	4,578	201	2,684	.....	.....	81	1,894	
(c) } Piece-goods { European	1,233	11,101	1,315	10,275	82	.....	.....	826	
(d) } { Indian ...	240	2,025	398	3,389	158	1,364	.....	.....	
(e) Others	1	7	11	92	10	85	.....	.....	
IV.—Chemicals, excepting saltpetre	.....	.....	36	173	36	173	.....	.....	
V.—Drugs—							.. ...	.....	
1. Intoxicating, other than opium.	4	73	4	120	.....	47	.....	.....	
2. Non-intoxicating—									
(a) Medicinal preparations.	.....	.....	....	.....	.....	.....	.....	.....	
(b) Others	235	1,383	331	2,343	96	960	.....	.....	
VI.—Dyes and Tans—									
1. Al (Morinda citrifolia)	... ..	.....	.....	.....	.....	.....	.....	.....	
2. Alizarine and aniline dyes.	2	26	25	231	23	205	.....	.....	
3. Cutch	194	1,502	102	2,632	. .. .	1,130	32	.....	
4. Indigo	.....	.....	29	71	29	71	.....	.....	
5. Myrabolams	1	18	5	31	4	13	.....	.....	
6. Tanning barks	.....	.....	84	736	84	736	.....	.....	
7. Turmeric	616	5,074	940	7,365	324	2,291	.....	.. .	
8. Others	89	662	96	710	7	48	.....	.....	Increased production.
VII.—Fodder—							.....	... ..	
1. Oilcake	557	1,441	1,010	2,027	453	586	.....	... ..	
2. Hay, straw and grass ..	507	2,095	188	1,017	.....	.....	319	1,078	Demand locally.
VIII.—Fruits and vegetables, fresh	214	636	502	1,235	288	599	.....	.....	Local traffic, good crops.
IX.—Grain and Pulse—									
1. Gram and pulse ...	4,002	12,031	4,169	16,316	167	4,285	.....	.....	
2. Jawar and bajra ...	93	389	747	3,147	654	2,758	.....	.....	
3.} Rice { in the husk ...	2,314	7,336	1,436	5,162	...	.....	.....	.....	
4.} { not in the husk	16,589	72,977	7,425	31,916	.....	.....	878	2,174	} Defective crops in Tirhut.
5. Wheat	1,995	12,028	2,235	9,907	237	.....	9,134	41,061	
6. Wheat-flour	151	1,126	355	2,344	204	.....	.....	2,721	
7. Makai	2,093	8,889	2,827	13,429	734	1,218	... .	.....	
8. Others	5,204	20,034	1,605	5,771	.....	4,540	.....	.....	
X.—Hides and Skins—						.....	3,599	14,263	
1. Hides of cattle—									
(a) Dressed or tanned	.....	.....	.....	.....	.....	...	.....	.....	
(b) Raw	526	1,865	433	2,600	107	735	.....	.....	
2. Skins of sheep and other animals—									
(a) Dressed or tanned	1	5	.....	.....	.....	.....	1	5	
(b) Raw	197	972	131	831	.....	.....	66	141	
XI.—Horns	3	1	4	48	1	49	.....	.....	
XII.—Hemp (Indian) and other fibres, excluding jute.	.....	.....	21	76	21	76	.....	.....	
XIII.—Jute—									
1. Raw	93	518	78	509	.....	.....	15	9	
2. Gunny-bags and cloth	1,809	11,057	1,733	10,794	.....	.....	77	263	
XIV.—Lac	114	688	234	1,254	120	566	.....	.....	
XV.—Leather—									
1. Unwrought	.....	.....	.....	.....	.....	.....	.....	.....	
2. Wrought, excepting boots and shoes.	2	31	1	17	.....	.....	1	14	
XVI.—Liquors—									
1. Ale and Beer	8	39	4	26	.....	.....	4	13	
2. Spirits of all kinds, including country spirits.	.....	... ..	1	4	1	4	.....	.....	
3. Wine	13	161	10	108	.....	.....	3	55	
4. All other sorts, including toddy and fermented liquor, other than ale and beer.	.....	.....	.....	.....	.....	.....	.....	.....	
XVII.—Metals—									
1. Brass, unwrought ...	12	106	34	122	20	16	.....	.....	
2. .. wrought ...	138	1,050	107	971	.....	.....	31	79	
3. Copper, unwrought ...	1	6	.....	.....	.....	.....	1	6	
4. .. wrought ...	3	22	15	150	12	128	.....	.....	
5. Iron and steel—									
(a) Cast	39	267	33	200	.....	.....	6	67	
(b) Unwrought ...	.....	.....	8	39	8	39	... .	.. ...	
(c) Wrought	640	3,246	494	2,100	.....	.....	146	1,146	
(d) Manufactures ...	257	1,556	178	1,458	.....	.....	79	98	
6. Others	201	1,630	177	1,139	.....	.....	24	500	
XVIII.—Oils—									
1 Kerosine	674	3,486	827	2,775	153	289	.....	.....	
2. Castor	14	88	12	54	.....	.....	2	34	
3. Cocoanut	16	104	20	119	4	15	.....	.....	
4. Mustard and rape ...	14	131	7	51	.....	.....	7	80	
5. Others	13	109	9	82	.....	.....	4	27	

Description of Goods.	1901.		1902.		Increase.		Decrease.		Explanation of fluctuations by the Traffic Manager.
	Tons.	Rs.	Tons.	Rs.	Tons.	Rs.	Tons.	Rs.	
XIX.—Oilseeds—									
1. Castor	183	569	314	933	191	364	.....	.....	
2. Earthnuts	.....	.....	.....	.....	.....	.....	.....	.....	
3. Linseed	20,172	67,684	16,866	67,404	.....	.....	3,306	280	Less production.
4. Poppy	220	1,320	297	1,105	77	.....	.....	215	
5. Rape and mustard ...	1,101	6,579	10,298	45,602	9,189	39,023	.....	.....	Increased production and demand in Bombay and Calcutta.
6. Til or jinjili	37	201	29	133	.....	.....	8	68	
7. Others	4,445	17,610	295	1,437	.....	.....	4,150	16,173	
XX.—Opium	1,006	16,801	648	10,225	.....	.....	358	6,668	Less production.
XXI.—Paper and Pasteboard ...	16	198	36	180	20	.....	.....	18	
XXII.—Provisions—									
1. Dried fruits and nuts ...	56	490	81	885	25	395	.....	.....	
2. Ghee	300	2,618	207	2,388	.....	.....	3	230	
3. Others	472	2,160	2,048	7,740	1,576	5,580	.....	.....	Opening of extensions.
XXIII.—Railway Plant and Rolling Stock carried for the Public and Foreign Railways—									
1. Locomotive engines and tenders and parts thereof.	.....	.....	.....	.....	.....	.....	.....	.....	
2. Carriages and trucks and parts thereof.	.....	.....	.....	.....	.....	.....	.....	.....	
3. Materials—									
(a) Steel rails and fish-plates.	.....	.....	.....	.....	.....	.....	.....	.....	
(b) Sleepers and keys of steel and cast-iron.	.....	.....	182	1,338	182	1,338	.....	.....	
(c) Others	.....	.....	.....	.....	.....	.....	.....	.....	
XXIV.—Salt	5,461	25,320	7,173	24,462	.....	.....	1,288	858	
XXV.—Saltpetre and other saline substances—									
1. Saltpetre	840	2,817	1,435	4,402	595	1,585	.....	.....	Increased production.
2. Other saline substances	2	8	20	121	18	113	.....	.....	
XXVI.—Silk—									
1. Raw—									
(a) Foreign	.....	.....	.....	.....	.....	.....	.....	.....	
(b) Indian	1	7	9	57	8	50	.....	.....	
2. Piece-goods—									
(a) Foreign	.....	.....	.....	.....	.....	.....	.....	.....	
(b) Indian	.....	.....	.....	.....	.....	.....	.....	.....	
XXVII.—Spices—									
1. Betelnuts	144	1,123	201	1,444	57	321	.....	.....	
2. Cardamoms	140	1,174	215	1,695	75	521	.....	.....	
3. Chillies	395	3,045	688	5,713	293	2,667	.....	.....	Opening of Katihar route.
4. Ginger	56	231	19	136	.....	.....	37	95	
5. Pepper	15	109	31	265	16	156	.....	.....	
6. Others	354	2,856	313	2,862	.....	6	41	.....	
XXVIII.—Stone and lime	750	2,340	1,026	2,201	276	.....	.....	148	
XXIX.—Sugar—									
1. Refined or crystallised, including sugarcandy.	3,701	21,880	3,035	29,167	174	7,287	.....	.....	Increased production.
2. Unrefined—									
(a) Sugar	1,081	6,800	892	5,740	.....	.....	189	1,060	
(b) Gur, rab, jaggery, molasses and other saccharine produce.	5,881	29,827	7,078	34,661	1,197	4,834	.....	.....	
XXX.—Tea—									
1. Foreign	.....	.....	.....	.....	.....	.....	.....	.....	
2. Indian	1	6	1	14	.....	8	.....	.....	
XXXI.—Tobacco—									
1. Unmanufactured ...	5,196	34,685	3,193	28,069	.....	.....	2,003	6,616	Late crops.
2. Manufactured—									
(a) Cigars	.....	.....	1	11	1	11	.....	.....	
(b) Other sorts ...	47	219	116	981	69	762	.....	.....	
XXXII.—Wood—									
1. Timber, unwrought ...	214	539	317	1,319	103	680	.....	.....	
2. Logs	1,113	2,412	967	1,961	.....	.....	145	451	
3. Poles	.....	.....	.....	.....	.....	.....	.....	.....	
4. Manufactures	170	723	157	1,368	.....	645	13	.....	
XXXIII.—Wool—									
1. Raw	16	251	11	140	.....	.....	5	111	
2. Manufactured—									
(a) Carpets and rugs ...	.....	.....	.....	.....	.....	.....	.....	.....	
(b), (c) Piece-goods { European	.....	.....	4	35	4	35	.....	.....	
(b), (c) Piece-goods { Indian	7	60	13	86	6	26	.....	.....	
(d) Other sorts of manufactures.	2	4	1	4	.....	.....	1	.....	
XXXIV.—All other articles of merchandise—									
1. Indigo-seed	264	1,308	103	360	.....	.....	161	948	
2. Firewood	748	1,632	977	1,524	229	.....	.....	308	
3. Others not specified above.	3,807	18,838	6,652	19,977	2,845	1,139	.....	.....	
Total ...	110,743	4,81,811	108,608	4,77,223	24,092	96,827	26,227	1,01,416	

J. LIGHTFOOT,
Chief Auditor,

GORAKHPUR, *the 20th August 1902.*

SEGOWLIE-RAKSAUL BRANCH RAILWAY.

Statement of Goods Traffic for the month of March 1902 compared with the corresponding period in 1901.

Description of Goods.	1901.		1902.		Increase.		Decrease.		Explanation of fluctuations by the Traffic Manager.
	Mds.	Rs.	Mds.	Rs.	Mds.	Rs.	Mds.	Rs.	
I.—Apparel, including drapery, haberdashery, millinery, uniforms, accoutrements, boots and shoes.	17	1	12	3	...	2	5	...	
II.—Coal and Coke carried for the Public and Foreign railways.	3,871	71	9,415	128	5,544	57	...	...	Demand for brick-burning.
III.—Cotton—									
1. Raw	149	12	220	26	71	14	...	...	
2. Manufactured—									
(a) (b) Twist and yarn { European	5	1	2	1	...		...		
(a) (b) Twist and yarn { Indian ...	680	37	930	57	250	20	3	...	
(c) (d) Piece-goods ... { European	1,753	101	1,319	115	...	14	...	...	
(c) (d) Piece-goods ... { Indian ...	1,195	60	1,353	90	158	31	434	...	
(e) Others	...	...	36	4	36	4	...	...	
IV.—Chemicals, excepting saltpetre	...	...	...	...	...	...	...	...	
V.—Drugs—									
1. Intoxicating, other than opium,	...	...	...	...	...	...	...	...	
2. Non-intoxicating—									
(a) Medicinal preparations	...	...	...	...	...	...	...	...	
(b) Others	11	1	39	1	28	...	...	...	
VI.—Dyes and Tans—									
1. Al (Morinda citrifolia) ...	...	...	...	...	...	...	...	...	
2. Alizarine and aniline dyes	...	...	...	...	...	...	...	...	
3. Cutch	...	...	...	...	...	...	...	...	
4. Indigo	...	...	11	1	11	1	...	...	
5. Myrabolams	...	...	...	...	...	...	...	...	
6. Tanning barks	...	...	...	...	...	...	...	...	
7. Turmeric	...	...	...	...	...	...	...	...	
8. Others	...	...	70	6	70	6	...	...	
VII.—Fodder—									
1. Oilcake	...	...	...	...	...	...	...	...	
2. Hay, straw and grass ...	...	...	...	...	...	...	...	...	
VIII.—Fruits and vegetables, fresh ...	176	3	98	3	...	...	...	...	
IX.—Grain and Pulse—							78	...	
1. Gram and pulse	63	2	762	18	699	16	...	...	
2. Jawar and bajra	...	...	...	...	...	...	...	...	
3. 4. Rice { in the husk ...	4,782	102	4,378	81	...	...	...	...	
3. 4. Rice { not in the husk ...	14,325	231	5,012	73	...	...	404	21	} Defective crops.
5. Wheat	...	...	3	1	3	...	9,313	158	
6. Wheat-flour	20	1	37	1	17	1	...	...	
7. Makai	...	...	...	...	...	...	...	...	
8. Others	181	5	20	1	...	...	161	4	
X.—Hides and Skins—									
1. Hides of cattle—									
(a) Dressed or tanned ...	...	...	...	...	...	...	...	...	
(b) Raw	126	5	305	5	179	...	...	...	
2. Skins of sheep and other animals—									
(a) Dressed or tanned ...	...	...	...	...	...	...	...	...	
(b) Raw	149	5	29	1	...	...	120	4	
XI.—Horns	...	...	...	...	...	...	...	...	
XII.—Hemp (Indian) and other fibres, excluding jute.	...	...	6	1	6	1	...	...	
XIII.—Jute—									
1. Raw	15	1	6	1	...	...	9	...	
2. Gunny-bags and cloth ...	1,373	44	408	19	...	...	965	25	
XIV.—Lac	...	...	...	...	...	...	...	...	
XV.—Leather—									
1. Unwrought	...	...	...	...	...	...	...	...	
2. Wrought, excepting boots and shoes.	...	...	10	1	10	1	...	...	
XVI.—Liquors—									
1. Ale and Beer	...	...	...	...	...	...	...	...	
2. Spirits of all kinds, including country spirits.	...	...	...	...	...	...	...	...	
3. Wine	...	...	...	...	...	...	...	...	
4. All other sorts, including toddy and fermented liquor, other than ale and beer.	...	...	...	...	...	...	...	...	
XVII.—Metals—									
1. Brass, unwrought	...	...	8	1	8	1	...	...	
2. ,, wrought	25	1	106	11	81	10	...	...	
3. Copper, unwrought ...	...	...	...	...	...	...	...	...	
4. ,, wrought	...	...	4	1	4	1	...	...	
5. Iron and steel—									
(a) Cast	135	15	302	6	167	...	...	...	
(b) Unwrought	...	...	23	1	23	1	...	9	
(c) Wrought	1,495	40	361	13	...	...	...	...	
(d) Manufactures	1,040	103	774	27	...	...	1,334	27	} Less demand in Nepal.
6. Others	68	3	94	10	26	7	266	76	
XVIII.—Oils—							...	...	
1. Kerosine	1,719	40	4,790	69	3,071	29			
2. Castor	..	...	20	1	20	1	...	...	Increased demand.
3. Cocoanut	...	...	8	1	8	1	...	...	
4. Mustard and rape	...	...	...	...	...	...	...	...	
5. Others	20	2	143	9	117	7	...	...	

Description of Goods.	1901.		1902.		Increase.		Decrease.		Explanation of fluctuations by the Traffic Manager.
	Mds.	Rs.	Mds.	Rs.	Mds.	Rs.	Mds.	Rs.	
XIX.—Oilseeds—									
1. Castor	...	...	...	...	...	...	...	...	
2. Earthnuts	...	...	...	...	...	...	...	...	
3. Linseed	...	...	13	2	13	2	...	...	
4. Poppy	...	...	...	...	...	...	...	...	
5. Rape and mustard	937	2	440	13	...	11	491	...	
6. Til or jinjili	...	...	...	...	...	...	...	...	
7. Others	1,189	27	486	12	...	...	703	15	Less production.
XX.—Opium	...	...	...	...	...	...	...	...	
XXI.—Paper and pasteboard	9	1	2	1	...	...	7	...	
XXII.—Provisions—									
1. Dried fruits and nuts	70	3	58	3	...	...	12	...	
2. Ghee	11	1	...	...	...	...	11	1	
3. Others	44	3	39	1	...	...	5	2	
XXIII.—Railway plant and rolling-stock carried for the public and foreign railways—									
1. Locomotive engines and tenders and parts thereof	...	...	...	...	...	...	...	...	
2. Carriages and trucks and parts thereof.	...	...	...	...	...	...	...	...	
3. Materials—									
(a) Steel rails and fish-plates.	...	...	...	...	...	...	...	...	
(b) Sleepers and keys of steel and cast-iron.	...	...	...	...	...	...	...	...	
(c) Others	...	...	...	...	...	...	...	...	
XXIV.—Salt	6,837	137	5,476	66	...	...	1,361	71	
XXV.—Saltpetre and other saline substances—									
1. Saltpetre	...	...	...	...	...	...	...	...	
2. Other saline substances	...	...	355	6	355	6	...	...	
XXVI.—Silk—									
1. Raw—									
(a) Foreign	...	...	...	...	...	...	...	...	
(b) Indian	...	...	...	...	...	...	...	...	
2. Piece-goods—									
(a) Foreign	...	...	...	...	...	...	...	...	
(b) Indian	...	...	...	...	...	...	...	...	
XXVII.—Spices—									
1. Betelnuts	470	23	212	14	...	...	258	9	
2. Cardamoms	...	...	...	...	...	...	...	...	
3. Chillies	...	...	81	1	81	1	...	...	
4. Ginger	...	...	...	...	...	...	...	...	
5. Pepper	22	2	84	6	62	4	...	...	
6. Others	68	3	362	18	294	15	...	...	
XXVIII.—Stone and lime	...	...	...	...	...	...	...	...	
XXIX.—Sugar—									
1. Refined or crystallized, including sugarcandy.	1,415	56	1,380	10	...	...	35	46	
2. Unrefined—									
(a) Sugar	69	3	63	5	...	2	6	...	
(b) Gur, rab, jaggree, molasses, and other saccharine produce.	68	1	8	1	...	...	78	...	
XXX.—Tea—									
1. Foreign	...	...	...	...	...	...	...	...	
2. Indian	...	...	...	...	...	...	...	...	
XXXI.—Tobacco—									
1. Unmanufactured	1,212	56	737	16	...	...	475	40	Less demand.
2. Manufactured—									
(a) Cigars	16	2	123	15	107	13	...	...	
(b) Other sorts	6	1	9	1	3	...	...	...	
XXXII.—Wood—									
1. Timber, unwrought	...	...	3,419	57	3,419	57	...	...	Increased demand and output from Nepal.
2. Logs	1,994	29	9,603	147	7,609	118	...	...	
3. Poles	...	...	...	...	...	...	...	...	
4. Manufactures	18	1	170	18	152	17	...	...	
XXXIII.—Wool—									
1. Raw	...	...	2	1	2	1	...	...	
2. Manufactured—									
(a) Carpets and rugs	...	...	9	2	9	2	...	...	
(b) (c) Piece-goods { European / Indian	...	...	30	2	30	2	...	...	
(d) Other sorts of manufactures.	...	...	...	...	...	...	...	...	
XXXIV.—All other articles of merchandise—									
1. Indigo-seed	...	...	...	...	...	...	...	...	
2. Firewood	...	...	...	...	...	...	...	...	
3. Others not specified above	9,706	324	2,393	154	...	...	7,313	170	
Total	57,578	1,571	56,674	1,360	22,743	467	23,647	678	

GORAKHPUR, *the 21st August 1902.*

J. LIGHTFOOT,
Chief Auditor.

Weekly Return of Traffic Receipts on Indian Railways

EAST INDIAN RAILWAY.

Approximate Return of Traffic for week ended 9th August 1902 on 1,913·49 miles open.

	Coaching Traffic.		Merchandise and Mineral Traffic.		Other earnings (estimated).	Total earnings.	Traffic Train-miles run.		
	Number of passengers.	Coaching receipts.	Weight carried.	Receipts.			Coaching.	Merchandise.	Total.
		Rs. A. P. (a)	Mds. s.	Rs. A. P. (b)	Rs. A. P.	Rs. A. P.			
Total traffic for the week ...	351,528	3,46,767 8 9	40,99,289 30	7,13,079 11 0	22,546 0 0	10,82,393 3 0	109,751	162,257	272,008
Or per mile of railway ...	... ..	181 3 7	...	372 10 7	11 12 6	565 10 8	.....	.....	... ..
For previous 4½ weeks of half-year.	1,859,371	17,82,922 10 0	2,12,96,405 0	36,67,481 3 0	1,17,521 0 0	55,67,924 13 0	512,731	823,672	1,336,402
Total for 5½ weeks ...	2,210,899	21,29,690 2 0	2,53,95,694 30	43,80,560 14 0	1,40,067 0 0	66,50,318 0 0	622,482	985,929	1,608,411
Comparison.									
Total for corresponding week of previous year.	418,883	4,53,908 12 10	53,28,299 0	8,91,355 14 9	20,578 8 2	13,65,743 3 0	113,264	205,882	319,146
Per mile of railway corresponding week of previous year.	.....	240 15 3	.....	484 14 4	11 3 1	743 0 8	.....	.....	.....
Total for corresponding 5½ weeks of previous year.	2,375,526	25,13,889 12 11	3,15,22,457 10	57,09,057 4 5	1,14,249 12 3	83,37,796 13 7	643,379½	1,249,125½	1,892,498

(*a*) The decrease is due to the running of several extra troop trains from Kidderpore Docks and extra passenger trains for "Rajgir Mela" during the corresponding period of 1901.
(*b*) The decrease is chiefly in coal.

1902. *Abstract of progressive weekly returns of all earnings for 1902 in comparison with 1901.*

Open mileage.	Period.	Coaching Traffic.		Merchandise and Mineral Traffic.		Other earnings.	Total.	Per mile of Railway.	Train mileage.	
		No. of Passengers.	Rs.	Mds.	Rs.	Rs.	Rs.	Rs.	No.	Rate. Rs. A. P.
1,913·49	12 days of July ...	704,605	6,77,571	84,01,481	14,45,113	38,006	21,60,689	1,129	496,763	4 5 7
1,913·49	Week ended 19th July ...	439,028	3,82,393	45,08,891	7,77,213	27,287	11,86,883	620	281,380	4 3 6
1,913·49	,, ,, 26th ,, ...	389,578	3,76,190	42,41,383	7,30,928	29,483	11,35,610	593	273,900	4 2 4
1,913·49	,, ,, 2nd August	348,160	3,47,770	41,34,650	7,14,328	22 748	10,94,743	567	254,300	3 13 1
1,913·49	,, ,, 9th ,, ...	351,528	3,46,767	40,99,290	7,13,080	22,546	10,82,393	566	272,008	3 15 8
	Totals up to date ...	2,210,899	21,29,690	2,53,85,095	43,80,561	1,40,067	66,50,318	608	1,608,411	4 2 2

Abstract of progressive weekly returns of all earnings for 1902 in comparison with 1901—concluded. *1901*

		No. of Passengers.	Rs.	Mds.	Rs	Rs.	Rs.	Rs.	No.	Rate. Rs. A. P.
1,837·46	13 days of July ...	707,203	7,62,573	1,04,38,391	18,92,791	34,036	26,89,400	1,464	586,902	4 9 4
1,837·79	Week ended 20th July ..	385,810	3,75,644	54,41,787	9,82,248	19,453	13,77,344	740	325,917	4 3 7
1,838·04	,, ,, 27th ,, ...	436,637	4,34,998	50,18,440	9,75,870	20,231	14,31,099	779	325,316	4 6 5
1,838·04	,, ,, 3rd August	427,584	4,36,760	53,95,540	9,67,492	19,932	14,74,210	803	335,217	4 6 4
1,838·04	,, ,, 10th ,, ...	418,883	4,53,909	53,28,299	8,91,256	20,579	13,65,744	743	319,146	4 4 6
	Totals up to date ...	2,375,526	25,13,890	3,15,22,457	57,09,057	1,14,250	83,37,797	775	1,892,498	4 6 6

TARKESSUR BRANCH RAILWAY.

Approximate Return of Traffic for week ended 9th August 1902 on 22·23 miles open.

	Coaching Traffic.		Merchandise and Mineral Traffic.		Other earnings (estimated).	Total earnings.	Traffic Train-miles run.		
	No. of passengers.	Coaching receipts.	Weight carried.	Receipts.			Coaching.	Merchandise.	Total.
		Rs. A. P.	Mds. s.	Rs. A. P.	Rs. A. P.	Rs. A. P.			
Total traffic for the week ...	19,044	4,716 8 0	17,068 30	908 14 0	7 0 0	5,632 6 0	1,058	130	1,188
Or per mile of railway ...	.....	212 2 6	... ..	40 14 2	·0 5 1	253 5 11	.....	.....	... ..
For previous 4½ weeks of half-year	107,402	25,539 10 0	56,806 30	1,801 14 0	34 0 0	27,375 8 0	5,140	492	5,632
Total for 5½ weeks ...	126,446	30,256 2 0	73,965 20	2,710 12 0	41 0 0	33,007 14 0	6,198	622	6,820
Comparison.									
Total for corresponding week of previous year.	21,089½	4,806 7 8	6,936 20	312 3 0	9 15 0	5,128 9 8	1,153	36	1,189
Per mile of railway corresponding week of previous year.	.....	216 3 6	.....	14 0 8	0 7 2	230 11 4	.....	.....	.....
Total for corresponding 5½ weeks of previous year.	137,366	31,150 0 1	46,065 :0	1,909 9 0	46 8 9	33,106 1 10	6,645	395	7,040

TARKESSUR BRANCH RAILWAY - *concluded.*

1902. *Abstract of progressive weekly returns of all earnings for 1902 in comparison with 1901.*

Open mileage.	Period.	Coaching Traffic.		Merchandise and Mineral Traffic.		Other earnings.	Total.	Per mile of railway.	Train mileage.	
		No. of passengers.	Rs.	Mds.	Rs.	Rs.	Rs.	Rs.	No.	Rate. Rs. A. P.
22·23	12 days of July ...	38,151	9,696	16,401	653	12	10,361	466	2,068	5 0 2
22·23	Week ended 19th July	29,831	6,624	11,762	414	7	7,045	317	1,188	5 14 11
22·23	,, ,, 26th ,,	21,637	5,123	13,686	371	8	5,502	247	1,188	4 10 1
22·23	,, ,, 2nd August	17,793	4,097	15,096	363	7	4,467	201	1,188	3 13 3
22·23	,, ,, 9th ,, ,,	19,044	4,717	17,069	909	7	5,633	253	1,188	4 11 10
	Totals up to date ...	126,446	30,257	73,966	2,710	41	33,008	200	6,820	4 13 5

Abstract of progressive weekly returns of all earnings for 1902 in comparison with 1901—concluded. *1901.*

		No. of passengers.	Rs	Mds.	Rs.	Rs.	Rs.	Rs.	No.	Rate. Rs. A. P.
22·23	13 days of July ,,	41,388	9,010	20,302	786	18	10,714	482	2,244	4 13 5
22·23	Week ended 20th July ...	19,522	4,533	5,910	267	8	4,808	216	1,188	4 0 9
22·23	,, ,, 27th ,,	30,403	6,411	7,851	310	6	727	303	1,232	5 7 4
22·23	,, ,, 3rd August	24,864	5,480	5,586	234	5	5,738	258	1,188	4 13 3
22·23	,, ,, 10th ,,	21,089	4,807	6,937	312	10	5,129	231	1,188	4 5 1
	Totals up to date ...	137,266	31 150	46,086	1,909	47	33,106	254	7,040	4 11 8

DELHI-UM BALLA-KALKA RAILWAY.

Approximate Return of Traffic for week ended 9th August 1902, on 162·24 miles open.

	Coaching Traffic.		Merchandise and Mineral Traffic.		Other earnings (estimated).	Total earnings.	Traffic Train-miles run.		
	No. of Passengers.	Coaching Receipts.	Weight carried.	Receipts.			Coaching.	Merchandise.	Total.
		Rs. A. P.	Mds. S.	Rs. A. P.	Rs. A. P.	Rs. A. P.			
Total traffic for the week	21,855	17,891 8 0	77,219 10	9,040 6 0	45 0 0	27,585 14 0	8,415	4,861	13,276
Or per mile of railway	... 110	4 5	..	59 7 8	0 4 5	170 0 6	...	...	...
For previous 4½ weeks of half-year	107,044	86,227 0 0	4,31,511 10	42 763 10 0	226 0 0	1,29,216 10 0	39,918	20,297	60,215
Total for 5½ weeks ...	128,899	1,04,118 8 0	5,09,030 20	52,413 0 0	271 0 0	1,56,802 8 6	48,333	25,158	73,491
COMPARISON.									
Total for corresponding week of previous year	21,587½	19,225 2 1	1,98,343 30	11,530 15 0	34 4 9	30,799 5 10	8,344	3,516½	11,860½
Per mile of railway corresponding week of previous year.	...	118 8 0	...	71 2 1	0 3 4	189 13 5	...	...	...
Total for corresponding 5½ weeks of previous year.	130,605	1,00,561 1 0	7,82,663 0	74,893 5 7	268 2 8	1,84,723 8 10	47,505½	20,607½	68,113

1902. *Abstract of progressive weekly returns of all earnings for 1902 in comparison with 1901.*

Open mileage.	Period.	Coaching Traffic.		Merchandise and Mineral Traffic.		Other earnings.	Total.	Per mile of railway.	Train mileage.	
		Number of Passengers.	Rs.	Mds.	Rs.	Rs.	Rs.	Rs.	No.	Rate. Rs. A. P.
162·24	12 days of July ...	38,150	29,888	1,46,156	17,706	84	46,768	288	21,604	2 2 8
162 24	Week ended 19th ,, ...	23,810	18,459	97,123	8,972	54	27,485	169	12,560	2 3 6
162·24	,, ,, 26th ,, ...	26,020	19,806	93,854	7,900	47	27,753	171	12,928	2 2 4
162·24	,, ,, 2nd Aug. ...	20,064	19,074	94,678	8,096	41	27,211	167	13,123	2 1 3
162·24	,, ,, 9th ,, ...	21,855	17,892	77,210	9,649	45	27,588	170	13,276	2 1 5
	Totals up to date ..	128,899	1,04,119	5,00,030	52,413	271	1,56,803	169	73,491	2 2 2

Abstract of progressive weekly returns of all earnings for 1903 in comparison with 1901—concluded. *1901.*

		Number of Passengers.	Rs.	Mds.	Rs.	Rs.	Rs.	Rs.	No.	Rate. Rs. A. P.
162·24	13 days of July	41,953	31,192	3,15,809	30,744	62	62,018	382	21,945	2 13 5
162·24	Week ended 20th ,, ...	25,979	17,801	88,181	10,705	49	28,555	176	11,711	2 7 0
162·24	,, ,, 27th ,, ...	22,024	18,927	85,677	10,093	43	29,062	179	11,244	2 9 5
162 24	,, ,, 3rd Aug. ..	21,031	22,416	94,502	11,813	60	34,288	211	11,363	3 0 2
162·24	,, ,, 10th ,,	21,857	19,225	1,98,344	11,540	34	30,799	190	11,860	2 9 7
	Totals up to date	130,605	1,09,561	7,82,663	74,893	268	1,84,722	194	68,113	2 11

SOUTH BEHAR RAILWAY.

Approximate Return of Traffic for week ended 9th August 1902, on 78·76 miles open.

	Coaching Traffic.		Merchandise and Mineral Traffic.		Other earnings (estimated).	Total earnings.	Traffic Train-miles run.		
	Number of passengers.	Coaching receipts.	Weight carried.	Receipts.			Coaching.	Merchandise.	Total.
		Rs. A. P.	Mds. s.	Rs. A. P.	Rs. A. P.	Rs. A. P.			
Total traffic for the week	(d) 10,236	(d) 5,774 5 0	31,647 20	1,846 7 0	30 0 0	7,630 12 0	1,992	843	2,835
Or per mile of railway		73 5 1		23 7 1	0 6 1	97 2 3	...	...	...
For previous 44 weeks of half-year	53,293	28,474 3 0	1,64,191 0	10,493 12 0	103 0 0	39,069 15 0	9,044	4,344	13,388
Total for 5½ weeks ..	63,529	34,248 8 0	2,15,838 20	12,339 3 0	133 0 0	46,720 11 0	11,036	5,187	16,223
Comparison.									
Total for corresponding week of previous year ...	31,942½	13,849 4 7	49,143 10	3,541 4 0	34 6 0	17,424 15 4	2,104	1,203½	3,307½
Per mile of railway corresponding week of previous year	...	175 13 5	...	44 15 5	0 7 0	221 3 10	...	...	...
Total for corresponding 5½ weeks of previous year	117,495	51,511 0 3	2,87,224 20	18,937 10 0	98 4 6	70,546 14 9	11,895	7,556½	19,451½

(d) The decrease is due to the running of extra passenger trains for "Rajgir Mela" in the corresponding period of 1901.

1902 *Abstract of progressive weekly returns of all earnings for 1902 in comparison with 1901.*

Open mileage.	Period.	Coaching Traffic.		Merchandise and Mineral Traffic.		Other earnings.	Total.	Per mile of railway.	Train mileage.	
		Number of passengers.	Rs.	Mds.	Rs.	Rs.	Rs.	Rs.	No.	Rate. Rs. A. P.
78·76	12 days of July ..	20,060	9,776	65,612	4,388	36	14,100	179	5,119	2 12 1
78·76	Week ended 19th ,, ...	11,624	6,037	38,848	1,771	18	8,426	107	2,909	3 3 11
78·76	,, ,, 26th ,, ...	11,195	6,518	46,118	2,251	21	8,790	112	2,758	3 3 0
78·76	,, ,, 2nd Aug. ...	10,414	5,543	33,613	2,163	28	7,754	98	2,914	2 10 7
78·76	,, ,, 9th ,,	10,236	5,775	31,648	1,846	30	7,651	97	2,835	2 11 2
	Totals up to date ...	63,529	34,249	2,15,830	12,339	133	46,721	104	16,223	2 14 1

Abstract of progressive weekly returns of all earnings for 1902 in comparison with 1901—concluded. *1901.*

		No. of Passengers.	Rs.	Mds.	Rs.	Rs.	Rs.	Rs.	No.	Rate. Rs. A. P.
78·76	13 days of July	20,350	10,058	67,747	6,177	24	16,260	206	6,143	2 10 4
78·76	Week ended 20th ,, ...	12,298	5,865	50,336	3,121	8	8,994	114	3,307	2 11 6
78·76	,, ,, 27th ,, ...	19,907	8,084	40,002	2,883	18	10,984	139	3,308	3 5 2
78·76	,, ,, 3rd Aug ...	32,988	13,656	51,096	3,215	14	16,885	214	3,386	4 15 9
78·76	,, ,, 10th ,, ...	31,942	13,849	49,144	3,542	34	17,425	221	3,307	5 4 8
	Totals up to date ...	117,485	51,511	2,87,325	18,938	98	70,547	153	19,451	3 10 0

BENGAL CENTRAL RAILWAY COMPANY, LIMITED.

Approximate Return of Traffic and Mileage for the week ended 9th August 1902 on 139 miles open.

	Coaching Traffic.		Merchandise and Mineral Traffic.		Other earnings.	Total earnings.	Traffic Train-miles run.		
	Number of passengers.	Coaching receipts.	Weight carried.	Receipts.			Coaching.	Merchandise.	Total.
		Rs. A. P.	Mds. s.	Rs. A. P.	Rs. A. P.	Rs. A. P.			
Total traffic for the week ...	38,660	13,896 0 0	70,680 0	8,881 0 0	56 0 0	22,763 0 0	3,354	3,214	6,568
Or per mile of railway	297	106 0 0*	509 0	64 0 0	.....	170 0 0	.....	... ..	.....
For previous 5 weeks of half-year	170,234	69,671 0 0	1,90,021 0	16,672 0 0	557 0 0	86,900 0 0	15,802	12,673	28,475
Total for 6 weeks ...	208,894	83,567 0 0	2,60,720 0	25,553 0 0	613 0 0	1,09,663 0 0	19,156	15,887	35,043
Comparison.									
Total for corresponding week of previous year	44,341	14,056 0 0	1,11,017 0	12,508 0 0	354 0 0	27,518 0 0	3,081	4,610	7,691
Per mile of railway corresponding week of previous year ...	341	113 0 0	799 0	90 0 0	3 0 0	205 0 0	.....	.....	.....
Total to corresponding date of previous year	223,154	79,690 0 0	4,38,493 0	43,549 0 0	26,853 0 0	1,50,092 0 0	18,917	18,894	37,811

* Coaching traffic calculated on 130 miles only.

EASTERN BENGAL STATE RAILWAY.

(INCLUDING N. B., K.-D., DACCA, AND ASSAM-BEHAR SECTIONS)

Approximate Return of Traffic and Mileage for the week ended 16th August 1902 on 861† miles open.

	COACHING TRAFFIC.		MERCHANDISE AND MINERAL TRAFFIC.		Other earnings (including ferry).	Total earnings.	TRAFFIC TRAIN-MILES RUN.		
	No. of passengers.	Coaching receipts.	Weight carried.	Receipts.			Coaching.	Merchandise.	Total.
		Rs. A. P.	Mds. S.	Rs. A. P.	Rs. A. P.	Rs. A. P.			
Total traffic for the week ...	199,220	90,850 0 0	9,36,820 0	2,00,540 0 0	9,250 0 0	3,00,040 0 0	37,942	38,884	76,826
Or per mile of railway	231	106 0 0	1,088 0	233 0 0	1 0 0*	340 0 0*	...	...	...
For previous 6 weeks of half-year	1,289,770	6,05,990 0 0	47,43,870 0	8,07,840 0 0	73,490 0 0	14,87,320 0 0	216,620	204,390	421,010
Total for 7 weeks ..	1,488,990	6,96,840 0 0	56,80,690 0	10,08,380 0 0	82,740 0 0	17,87,960 0 0	254,562	242,774	497,336
COMPARISON									
Total for corresponding week of previous year	185,496	81,410 0 0	9,34,934 0	1,03,154 0 0	10,476 0 0	2,85,040 0 0	37,237	49,963	87,220
Per mile of railway corresponding week of previous year ..	217	95 0 0	1,093 0	226 0 0	1 0 0	342 0 0	...	...	...
Total to corresponding date of previous year	1,541,971	6,57,511 0 0	61,79,461 0	9,86,979 0 0	99,671 0 0	17,44,161 0 0	253,066	260 098	513,764

* Excluding ferry earnings.
† Corrected up to date.

BRAHMAPUTRA-SULTANPUR RAILWAY.

Approximate Return of Traffic and Mileage for the week ended 16th August 1902 on 59·19 miles open.

	COACHING TRAFFIC.		MERCHANDISE AND MINERAL TRAFFIC		Other earnings (including ferry).	Total earnings	TRAFFIC TRAIN-MILES RUN.		
	No. of passengers.	Coaching receipts.	Weight carried.	Receipts.			Coaching.	Merchandise.	Total.
	*	Rs. A. P.	Mds. S.	Rs. A. P.	Rs. A. P.	Rs. A. P.			
Total traffic for the week ...	6,330	1,970 0 0	30,230 0	3,460 0 0	20 0 0	5,450 0 0	1,078	1,418	2,496
Or per mile of railway ...	107	33 0 0	675 0	59 0 0	...	92 0 0	...	...	...
For previous 6 weeks of half-year	38,500	11,580 0 0	1,32,740 0	12,500 0 0	330 0 0	24,410 0 0	6,368	5,812	12,180
Total for 7 weeks ..	44,830	13,550 0 0	1,72,670 0	15,960 0 0	350 0 0	29,860 0 0	7,446	7,230	14,676
COMPARISON.									
Total for corresponding week of previous year	5,857	1,608 0 0	34,626 0	3,534 0 0	19 0 0	5,161 0 0	698	1,462	2,160
Per mile of railway corresponding week of previous year ..	99	27 0 0	587 0	60 0 0		87 0 0	...	...	...
Total to corresponding date of previous year	42,757	11,894 0 0	1,60,482 0	15,160 0 0	143 0 0	27,217 0 0	6,036	9,759	15,795

MYMENSINGH-JAGANNATHGANJ RAILWAY.

Approximate Return of Traffic and Mileage for the week ended 16th August 1902 on 53·37 miles open.

	COACHING TRAFFIC.		MERCHANDISE AND MINERAL TRAFFIC.		Other earnings (including ferry).	Total earnings.	TRAFFIC TRAIN-MILES RUN.		
	No. of passengers.	Coaching receipts.	Weight carried.	Receipts.			Coaching.	Merchandise.	Total.
		Rs. A. P	Mds. S.	Rs. A P.	Rs. A. P.	Rs A P.			
Total traffic for the week ..	7,670	2,090 0 0	27,230 0	960 0 0	40 0 0	3,090 0 0	1,114	969	2,083
Or per mile of railway ..	144	39 0 0	510 0	18 0 0	1 0 0	58 0 0	...	...	...
For previous 6 weeks of half-year	44,850	12,300 0 0	83,640 0	3,750 0 0	130 0 0	16,240 0 0	6,955	5,003	11,958
Total for 7 weeks ...	52,520	14,450 0 0	1,10,870 0	4,710 0 0	170 0 0	19,330 0 0	8,069	5,972	14,041
COMPARISON.									
Total for corresponding week of previous year	6,001	1,603 0 0	17,366 0	691 0 0	28 0 0	2,412 0 0	1,072	447	1,519
Per mile of railway corresponding week of previous year ...	129	32 0 0	325 0	13 0 0	...	45 0 0	...	...	..
Total to corresponding date of previous year	51,733	13,660 0 0	67,401 0	2,988 0 0	177 0 0	16,825 0 0	7,689	5,542	13,231

DACCA STATE RAILWAY.

Approximate Return of Traffic and Mileage for the week ended 16th August 1902 on 86 miles open.

	Coaching Traffic.		Merchandise and Mineral Traffic.		Other earnings.	Total earnings.	Traffic Train-miles run.		
	No. of passengers.	Coaching receipts.	Weight carried.	Receipts.			Coaching.	Merchandise.	Total.
		Rs. A. P.	Mds. s.	Rs. A. P.	Rs. A. P.	Rs. A. P.			
Total traffic for the week ...	22,590	6,510 0 0	25,210 0	1,040 0 0	150 0 0	8,300 0 0	2,778	1,530	4,308
Or per mile of railway	263	76 0 0	293 0	19 0 0	2 0 0	97 0 0	...	...	...
For previous 6 weeks of half-year	155,130	42,730 0 0	1,00,120 0	8,950 0 0	1,430 0 0	53,110 0 0	16,876	9,113	25,988
Total for 7 weeks ...	177,720	49,240 0 0	1,25,330 0	10,590 0 0	1,580 0 0	61,410 0 0	19,654	10,642	29,996
Comparison.									
Total for corresponding week of previous year	19,998	5,917 0 0	37,796 0	3,347 0 0	42 0 0	9,306 0 0	2,866	2,050	4,916
Per mile of railway corresponding week of previous year ...	233	69 0 0	439 0	39 0 0	...	108 0 0	...	...	...
Total to corresponding date of previous year	168,648	48,040 0 0	1,78,800 0	15,856 0 0	4,041 0 0	68,537 0 0	19,885	13,605	33,490

COOCH BEHAR STATE RAILWAY.

Approximate Return of Traffic and Mileage for the week ended 16th August 1902 on 33·78 miles open.

	Coaching Traffic.		Merchandise and Mineral Traffic.		Other earnings (including ferry).	Total earnings.	Traffic Train-miles run.		
	No. of passengers.	Coaching receipts.	Weight carried.	Receipts.			Coaching.	Merchandise.	Total.
		Rs. A. P.	Mds. s.	Rs. A. P.	Rs. A. P.	Rs. A. P.			
Total traffic for the week ...	2,250	770 0 0	6,770 0	930 0 0	10 0 0	1,710 0 0	248	2,088	2,336
Or per mile of railway ...	67	23 0 0	200 0	28 0 0	...	51 0 0	...	...	...
For previous 6 weeks of half-year	15,690	5,330 0 0	41,950 0	5,280 0 0	110 0 0	10,730 0 0	1,710	11,538	13,248
Total for 7 weeks ...	17,940	6,100 0 0	48,720 0	6,210 0 0	120 0 0	12,440 0 0	1,958	13,626	15,584
Comparison.									
Total for corresponding week of previous year	1,767	701 0 0	8,664 0	1,185 0 0	123 0 0	2,009 0 0	275	2,978	3,253
Per mile of railway corresponding week of previous year ...	52	21 0 0	256 0	35 0 0	...	56 0 0	...	...	...
Total to corresponding date of previous year	13,861	5,096 0 0	44,973 0	4,780 0 0	950 0 0	10,826 0 0	1,559	5,816	7,375

Ballast train-miles, 1,860.

SEGOWLIE-RAKSAUL BRANCH RAILWAY.

(Worked by the B. & N.-W. Railway.)

Audited Return of Traffic for the week ending 21st June 1902 on 18 miles open.

	Coaching Traffic.		Merchandise and Mineral Traffic.		Other earnings.	Total earnings.	Traffic Train-miles run.		
	Passengers carried.	Receipts.	Weight carried.	Receipts.			Coaching.	Merchandise.	Total.
	No.	Rs. A. P.	Mds.	Rs. A. P.	Rs. A. P.	Rs. A. P.			
Total traffic for the week on 18 miles open	2,094	288 9 5	15,501	254 9 6	10 6 0	553 8 11	336	168	504
Or per mile of railway	116·33	16 0 6	861·17	15 13 0	0 9 3	32 6 9	.....	.....	.....
For previous 23½ weeks of half-year	61,239	10,342 1 0	3,08,157	7,831 13 1	851 2 0	19,025 0 1	8,795	3,121	11,916
Total for 24½ weeks ...	63,333	10,630 10 5	3,21,658	8,116 6 7	861 8 0	19,608 9 0	9,131	3,289	12,420
Comparison.									
Total for corresponding week of previous year on 18 miles open	1,886	300 14 10	13,343	385 4 6	4 14 0	691 1 4	353	151	504
Per mile of corresponding week of previous year	104·78	16 11 6	741·50	21 6 6	0 4 4	38 6 4	.....	.....	.....
Total to corresponding date of previous year	50,772	8,463 4 6	3,48,972	9,878 7 1	772 14 0	19,114 9 7	8,928	3,069	11,997

ASSAM-BENGAL RAILWAY.

Approximate Return of Traffic for the week ended 9th August 1902 on 558 miles open for all descriptions of traffic, and an additional 31 miles for goods and parcels traffic only.

	Coaching Traffic.		Merchandise and Mineral Traffic.		Other earnings.	Total earnings.	Traffic Train-miles run.		
	No. of passengers.	Coaching receipts.	Weight carried.	Receipts.			Coaching.	Merchandise.	Total.
		Rs. A. P.	Mds. s.	Rs. A. P.	Rs. A. P.	Rs. A. P.			
Total traffic for the week ...	16,633	16,052 0 0	1,33,795 0	12,601 0 0	1,381 0 0	30,124 0 0	6,432	7,484	13,916
Or per mile of railway	47·73	28·77	227·16	21·35	2·34	52·60	11·53	13·71	24·24
For previous 5 weeks of half-year	141,687	81,191 0 0	8,11,173 0	73,010 0 0	6,875 0 0	1,61,976 0 0	30,911	40,559	71,470
Total for 6 weeks ...	158,320	97,243 0 0	9,44,967 0	86,601 0 0	8,256 0 0	1,92,100 0 0	37,343	48,043	85,386
Comparison.									
Total for corresponding week of previous year	25,876	15,539 0 0	99,848 0	14,464 0 0	764 0 0	30,767 0 0	5,916	6,337	12,253
Per mile of railway corresponding week of previous year ...	46·37	27·85	172·75	25·02	1·32	54·19	10·60	10·96	21·56
Total to corresponding date of previous year	161,722	97,911 0 0	6,73,231 0	1,00,638 0 0	8,333 0 0	2,06,932 0 0	37,180	37,116	74,296

FINANCIAL YEAR.

Approximate Statement of Gross Receipts of the Assam-Bengal Railway.

Receipts for week ended 9th August 1902.			Receipts for week ended 10th August 1901.			Total receipts from 1st April 1902 to 9th August 1902.			Total receipts from 1st April 1901 to 10th August 1901.			Total increase in 1902.	Total decrease in 1902.
Mean mileage worked.	Receipts.	Per mile worked.	Mean mileage worked.	Receipts.	Per mile worked.	Mean mileage worked.	Total receipts.	Per mile worked.	Mean mileage worked	Total receipts.	Per mile worked		
	Rs.	Rs.		Rs.	Rs.		Rs.			Rs.		Rs.	Rs.
589	30,134	52·66	578	30,767	54·19	589	6,47,073	...	578	7,27,729	...	.....	80,656

DARJEELING-HIMALAYAN RAILWAY COMPANY, LIMITED.

			Rs. A. P.	Rs. A. P.
Approximate earnings for the week ending 16th Aug. 1902 ...	Coaching ...	2,246 0 0		
	Goods ...	3,775 0 0		6,167 0 0
	Other earnings ...	146 0 0		
Audited earnings for the corresponding period of 1901 ...	Coaching ...	4,535 0 0		
	Goods ...	7,889 0 0		12,485 0 0
	Other earnings ...	61 0 0		
		Decrease ...		6,318 0 0
Receipts per mile for the week ending 16th Aug 1902				120 14 9
Ditto for the corresponding period of 1901				244 12 10
		Decrease ...		123 14 1
Receipts from 1st July to 16th Aug. 1902				89,588 0 0
Ditto for the corresponding period of 1901				94,423 0 0
		Decrease ...		4,835 0 0

Printed at the Printing Office, and published by the Book Depôt, of the Bengal Secretariat, Writers' Buildings, in the City of Calcutta, on 27th August 1902.

REGISTERED No. C209.]

No. 36 of 1902.

The Calcutta Gazette.

WEDNESDAY, SEPTEMBER 3, 1902.

CONTENTS.

	Page
PART I.—Orders and Notifications by the Lieutenant-Governor of Bengal, the High Court, Government Treasury, &c.	1171—1207
PART IA.—Orders and Notifications by the Government of India	139—141
PART IB.—Orders by the Lieutenant-Governor of Bengal	165—166
PART II.—Advertisements	1073—1114
PART III.—Acts of the Bengal Council	*Nil*
PART IV.—Bills of the Bengal Council	*Nil*
PART IVA.—Proceedings of the Bengal Legislative Council :—	
Proceedings of the Meeting, dated the 25th August 1902	89—93
PART V.—Acts of the Governor-General's Council assented to by the Governor-General	*Nil*
PART VI.—Bills introduced into the Council of the Governor-General for making Laws and Regulations, or published under Rule 23	*Nil*
APPENDIX.—Marine Notifications	333—339
SUPPLEMENT No. 36:—	
Statistical Return of Crops, Traffic by land and sea, Gauge readings, Circular and Eastern Canal, Meteorological Observation, Railway Traffic Receipts, &c., &c. ...	1239—1253

PART I

Orders and Notifications by the Lieutenant-Governor of Bengal, the High Court, Government Treasury, &c.

ORDERS BY THE LIEUT.-GOVERNOR OF BENGAL.

No. 4060A.

APPOINTMENTS AND TRANSFERS.

GENERAL.—*No. 2323A.D.—The 1st September 1902.*—Mr. L. S. S. O'Malley, Officiating Joint-Magistrate and Deputy Collector, on leave, is posted to the head-quartors station of the Bankura district.

Bankura.

This cancels so much of the order of the 26th August 1902 as relates to Mr. O'Malley's posting to the head-quarters station of the Monghyr district.

Monghyr.

REGISTRATION.—*No. 2265A.D.—The 29th August 1902.*—Babu Joges Chandra Sanyal, Special Sub-Registrar, Nadia, is appointed to be Special Sub-Registrar of Midnapore, *vice* Maulvi Syed Abdur Rohoman Muzaffar, deceased.

Nadia.
Midnapore.

No. 2267A.D.—The 29th August 1902.—Babu Sotish Chunder Mukherjee, Special Sub-Registrar, Malda, is appointed to be Special Sub-Registrar of Nadia.

Malda.
Nadia.

No. 2269A.D.—The 29th August 1902.—Babu Kripa Nath Dutt, Rural Sub-Registrar, Sealdah, 24-Parganas, is appointed to be Special Sub-Registrar of Malda.

24-Parganas.
Malda.

No. 2277A.D.—The 1st September 1902.—Maulvi Syed Abul Mansoor, Special Sub-Registrar, Ranchi, is appointed to be Special Sub-Registrar of Dinajpur, *vice* Maulvi Abdul Gaffoor, deceased.

Ranchi.
Dinajpur.

No. 2279A.D.—The 1st September 1902.—Maulvi Abdul Wali, Special Sub-Registrar, Rajshahi, is appointed to be Special Sub-Registrar of Ranchi.

Rajshahi.
Ranchi.

No. 2281A.D.—The 1st September 1902.—Babu Anunda Gopal Mookerjee, Rural Sub-Registrar, Ulubaria, Howrah, is appointed to be Special Sub-Registrar of Rajshahi.

Howrah.
Rajshahi.

EDUCATION.—*No. 4021A.—The 27th August 1902.*—Rai Sarat Chandra Das Bahadur, C.I.E., Provincial Educational Service, on special duty, is appointed to be Assistant Inspector of Schools, Chota Nagpur Division, with effect from the 15th September 1902, *vice* Babu Brajendra Kumar Guha, about to retire.

Chota Nagpur Division.

This cancels the order of the 15th July 1902, appointing Babu Mohini Mohan Chaudhuri, Professor, Hooghly College, to be Assistant Inspector of Schools, Chota Nagpur Division, with effect from the 15th September 1902.

Hooghly.
Chota Nagpur Division.

No. 4028A.—The 30th August 1902.—Babu Mohini Mohan Chaudhuri, Professor, Hooghly College, is appointed to act as a Professor in the Presidency College, during the absence, on leave, of Babu Sarada Prasanna Das, or until further orders.

Hooghly.
Calcutta.

LEAVE.

GENERAL.—*No. 2286A.D.—The 1st September 1902.*—Mr. C. H. Bompas, Deputy Commissioner, Sonthal Parganas, is allowed leave for one day, under article 291 of the Civil Service Regulations, in extension of the leave granted to him under the order of the 20th June 1902.

Sonthal Parganas.

No. 2288A.D.—The 1st September 1902.—Mr. E. G. Drake-Brockman, I.C.S., has been granted by His Majesty's Secretary of State for India an extension of furlough for seventeen days.

No. 2290A.D.—The 1st September 1902.—Mr. C. W. E. Connolly, substantive *pro tempore* Deputy Magistrate and Deputy Collector, Dinajpur, is allowed leave for one month, under article 273 (*a*) of the Civil Service Regulations, with effect from the 6th September 1902.

Dinajpur.

No. 2296A.D.—The 1st September 1902.—Babu Shyama Pada Chowdhry, Deputy Magistrate and Deputy Collector, Supaul, Bhagalpur, is allowed leave for three months, under article 291 of the Civil Service Regulations, with effect from the 8th August 1902, or any subsequent date on which he availed himself of it.

Bhagalpur.

No. 2300A.D.—The 1st September 1902.—Maulvi Syed Mohamed Abul Hayat, substantive *pro tempore* Deputy Magistrate and Deputy Collector, Hooghly, is allowed leave for two months, under article 369 (1) of the Civil Service Regulations, with effect from the afternoon of the 18th August 1902.

Hooghly.

EDUCATION.—*No. 4026A.—The 30th August 1902.*—Babu Sarada Prasanna Das, Professor, Presidency College, is allowed leave for one month, under article 309 of the Civil Service Regulations, with effect from the 4th September 1902, or such subsequent date as he may be relieved.

Calcutta.

The following orders are republished from the *Assam Gazette* :—

No. 6631G.—The 23rd August 1902.—Under the provisions of section 22 of the Code of Criminal Procedure (Act V of 1898), the Chief Commissioner appoints Mr. J. G. Dunlop, I.C.S., Assistant Commissioner, to be a Justice of the Peace within the Province of Assam.

No. 6687G.—The 28th August 1902.—Mr. G. P. Whalley, Assistant Superintendent of Police and Assistant to the Superintendent of the Lushai Hills, having passed an examination in the Lushai language according to the tests laid down in Rule 43 of the Rules for the encouragement of the study of Frontier languages, published under Notification No. 4389G., dated the 28th April 1893, is presented with the authorised reward of Rs. 1,000.

No. 6688G.—The 28th August 1902.—With effect from the 31st July 1902, in consequence of the absence, on privilege leave, of Captain H. M. Halliday, I.S.C., Officiating Deputy Commissioner, second grade, Mr. J. F. Gruning, I.C.S., Officiating Deputy Commissioner, third grade, to officiate as Deputy Commissioner, second grade.

C. E. BUCKLAND,
Chief Secy. to the Govt. of Bengal.

REVENUE DEPARTMENT.

NOTIFICATIONS.

No. 3426 O.—The 28th August 1902.—In line 2 of Notification No. 1854-O., dated the 21st March 1902, ordering certain promotions owing to the retirement of Mr. P. J. Luard's Sub-Deputy Opium Agent, published in Part I, page 438 of the *Calcutta Gazette* of the 26th idem, *for* "11th" *substitute* "12th".

No. 3378L R.—The 27th August 1902.—Whereas a settlement of land revenue is about to be made in respect of estate Char Katihari, bearing tauzi No. 4975, pargana Hussenshahi, in the district of Mymensingh: Mymensingh.

In exercise of the powers conferred upon him by section 101 (2) (*d*) of the Bengal Tenancy Act, VIII of 1885, as amended by Act III (B.C.) of 1898, the Lieutenant-Governor is pleased to direct that a survey shall be made and a record of rights prepared in respect of all lands included within the external boundaries of the said estate.

The particulars to be recorded in the survey and settlement shall be the following:—

(*a*) The name of each tenant or occupant.

(*b*) The class to which each tenant belongs, that is to say, whether he is a tenure-holder, raiyat holding at fixed rates, settled raiyat, occupancy raiyat, non-occupancy raiyat or under-raiyat; and if he is a tenure-holder, whether he is a permanent tenure-holder or not, and whether his rent is liable to enhancement during the continuance of his tenure.

(*c*) The situation and quantity and one or more of the boundaries of the land held by each tenant or occupier.

(*d*) The name of each tenant's landlord.

(*e*) The money rent payable at the time the record of rights is being prepared, or if a produce rent, the fact that a produce rent is paid.

(*f*) The mode in which that rent has been fixed, whether by contract, by order of a Court, or otherwise.

(*g*) If the rent is a gradually increasing rent, the time at which, and the steps by which, it increases.

(*h*) The special conditions and incidents, if any, of the tenancy.

(*i*) If the land is claimed to be held rent-free, whether or not rent is actually paid, and, if not paid, whether or not the occupant is entitled to hold the land without payment of rent, and, if so entitled, under what authority.

(*j*) The name of each proprietor, with the character and extent of his interest, and the situation, quantity, and one or more of the boundaries of each proprietor's private lands, as defined in Chapter XI of the Act.

No. 3427 Agri.—The 28th August 1902.—Under the authority vested in him by section 6, clause (2) of the Prevention of Cruelty to Animals Act, XI of 1890, the Lieutenant-Governor is pleased to declare the District Board Veterinary Dispensary at Comilla, situated within the limits of the Comilla Municipality, to be an infirmary for the treatment and care of such animals in respect of which any offence under section 6, clause (1) of the same Act, has been committed. Tippera.

W. C. MACPHERSON,
Offg. Secy. to the Govt. of Bengal.

GENERAL DEPARTMENT.

NOTIFICATIONS.

No. 2866.—The 28th August 1902.—In the statement showing the proportionate number of posts of Inspecting Pandits or Guru Instructors to be held by Hindus and Muhammadans in certain districts, published at page 601 of Part I of the *Calcutta Gazette* of the 7th May 1902, under this Department's Notification No. 96T.G., dated the 29th April 1902, for the entries in columns 3, 4, 5 and 6 against the 24-Parganas, *read* 17, 11, 6 and 5 *for* 8, 5, 3 and 3, respectively.

No. 2892.—The 2nd September 1902.—The following notification is published in the *Calcutta Gazette* for general information:—

No. 1793—23-8, dated Simla, the 16th August 1902.

NOTIFICATION—By the Govt. of India, Dept. of Revenue and Agriculture.

IN exercise of the power conferred by section 80 of the Indian Emigration Act, 1883 (XXI of 1883), the Governor-General in Council is pleased to direct that the following amendment be made in the rules as published with the Notification of the Government of

India in the Department of Revenue and Agriculture, No. 94E., dated the 18th March 1886, and subsequently amended, namely:—

In Schedule A for the rule regarding "Iron decks," the following shall be substituted :—

"*Iron decks.*—Every vessel bound to any place west of the Cape of Good Hope, or to Fiji *viâ* South Australia, having iron between-decks, shall have either a substantial watertight wooden deck properly laid over it, or sleeping platforms properly fitted on each side of the vessel in a fore and aft direction equal in area to the between-deck accommodation. These platforms shall be in two tiers at most; but, where the platforms do not provide sufficient accommodation, then additional platforms may be similarly fitted amidships either in a single or double row as may be required, care being taken to provide sufficiently wide clear passages fore and aft between the rows of platforms. The bottom of the lower tier shall be not less than twelve inches from the deck, and the bottom of the upper tier not less than two feet six inches from the bottom of the tier below, and the bottom boards of the lower tier shall be fitted loose in an athwartship direction in sections convenient for easy removal and deck cleaning. A margin board six inches high shall be fitted along the edges of the platforms and, where a double row of platforms is fitted amidships, a board nine inches high shall be fitted fore and aft, dividing such platforms into two equal widths of six feet."

"Mats and extra blankets shall also be supplied for the use of the emigrants to such extent as may be determined by the Surgeon-Superintendent in charge."

W. C. MACPHERSON,
Offg. Secy. to the Govt. of Bengal

MEDICAL DEPARTMENT.

No. 1442 Medl. P.—The 30th August 1902.—Major H. E. Deane, R.A.M.C., is allowed, under article 291 of the Civil Service Regulations, privilege leave from the 3rd September to the 22nd October 1902.

No. 1473T.M.—The 30th August 1902.—Dr. J. L. Hendley has been granted by His Majesty's Secretary of State for India an extension of four months' extraordinary leave without pay on medical certificate.

E. W. COLLIN,
Offg. Secy. to the Govt. of Bengal.

JUDICIAL DEPARTMENT.

No. 4061A.

APPOINTMENTS AND TRANSFERS.

No. 1921A.D.—The 11th July 1902.—Babu Raj Krishna Bandopadhyaya, Munsif, is appointed to be a Munsif in the district of Bhagalpur, to be ordinarily stationed at the Sadar station, and is vested with the powers of a Judge of a Court of Small Causes for the trial of suits cognizable by such a Court up to the value of Rs. 100, within the local limits of the Sadar Munsifi of Bhagalpur.

Bhagalpur.

No. 3996A.—The 26th August 1902.—Babu Sasi Kumar Ghose, B.L., is appointed to act as a Munsif in the district of Dacca, to be ordinarily stationed at Munshiganj, during the absence, on leave, of Babu Bunwari Lal Banerji, or until further orders.

Dacca.

No. 4019A.—The 27th August 1902.—Babu Pasupati Basu, M.A., B.L., is appointed to act as a Munsif in the district of Dinajpur, to be ordinarily stationed at the Sadar station, during the absence, on leave, of Babu Apurva Chandra Ghose, or until further orders.

Dinajpur.

No. 2310A.D.—The 1st September 1902.—Babu Nundo Lal Dey, Munsif of Tamluk, in the district of Midnapore, is appointed to act as Subordinate Judge of Midnapore, during the absence, on furlough, of Babu Jadupati Banerji, or until further orders.

Midnapore.

No. 3902J.—The 27th August 1902.—Mr. William Jameson Tomes is re-appointed to be an Honorary Magistrate of the Independent Bench at Jamalpur, in the district of Monghyr.

Monghyr.

LEAVE.

No. 2292A.D.—The 1st September 1902.—Babu Syam Chand Ray, Subordinate Judge, Birbhum, under orders of transfer to Tirhut, is allowed leave for thirty days, viz, fifteen days under article 309 of the Civil Service Regulations, and the remaining period under article 306 (*b*) of the Regulations, with effect from the 19th August 1902.

Birbhum. Tirhut.

No. 4058A.—The 27th August 1902.—Babu Rajendra Lall Lahiry, Munsif of Arrah, in the district of Shahabad, is allowed leave for six months, under article 369 of the Civil Service Regulations, in extension of that granted to him on the 12th June 1902.

Shahabad.

The 27th August 1902.—Babu Khetra Mohan Mitra, Munsif of Arambagh, in the district of Hooghly, is allowed furlough for eight months, under article 371 of the Civil Service Regulations, in continuation of the privilege leave for three months granted to him on the 8th May and 8th July 1902.

Hooghly.

The 27th August 1902.—Babu Srish Chandra Mukerji, Munsif of Jessore, is allowed leave for three weeks, under article 369 of the Civil Service Regulations, with effect from the 14th June 1902.

Jessore.

The 27th August 1902.—Babu Chunder Kumar Chatterji, Munsif of Raiganj, in the district of Dinajpur, under orders of transfer to Brahmanbaria, in the district of Tippera, is allowed leave for fifteen days, under article 306 (*b*) of the Civil Service Regulations, with effect from the date on which he availed himself of it.

Dinajpur. Tippera.

No. 4059A.—The 29th August 1902.—Babu Aghor Chandra Hazra, Munsif of Faridpur, is allowed leave for twenty days, under article 306 (*b*) of the Civil Service Regulations, in extension of that granted to him on the 28th July 1902.

Faridpur.

RESIGNATIONS.

No. 2297J.D.—The 1st September 1902.—The Lieutenant-Governor accepts the resignation tendered by the Rev. William Ernest Cooper of his appointment as an Honorary Magistrate of the Supaul Independent Bench, in the district of Bhagalpur.

Bhagalpur.

No. 2307J.D.—The 1st September 1902.—The Lieutenant-Governor accepts the resignation tendered by Mr. John Dunn Boylan of his appointment as an Honorary Magistrate of the Independent Bench at Jamalpur, in the district of Monghyr.

Monghyr.

POWERS.

No. 2298A.D.—The 1st September 1902.—In exercise of the power conferred by sub-section (1) of section 565 of the Code of Criminal Procedure, 1898, the Lieutenant-Governor is pleased to empower the following Magistrate of the first class in the district of Saran, viz., Mr. T. S. Macpherson, to order, at the time of passing sentence of imprisonment on any person referred to in that sub-section, that the residence or change of residence of such person after release shall be notified as provided by the rules made under sub-section (3) of the said section.

Saran.

Mr. Macpherson is also vested with powers under sections 110, 133, 143, 144 and 186 of the Code of Criminal Procedure.

No. 2314A.D.—The 1st September 1902.—Babu Siva Prasanna Sen, Deputy Magistrate, Tippera, is vested with powers under sections 110 and 133 of the Code of Criminal Procedure. He is also vested with the power to try summarily the offences mentioned in section 260 of the Code.

Tippera.

No. 3903J.—The 27th August 1902.—Mr. William Jameson Tomes, who has been re-appointed to be an Honorary Magistrate of the Independent Bench at Jamalpur, in the district of Monghyr, is vested with the powers of a Magistrate of the third class.

Monghyr.

C. E. BUCKLAND,
Chief Secy. to the Govt. of Bengal.

NOTIFICATIONS.

No. 3981J.—The 29th August 1902.—In exercise of the powers conferred by section 2 of Bengal Act II of 1867 (*an Act to provide for the punishment of public gambling and the keeping of common gaming-houses in the territories subject to the Lieutenant-Governor of Bengal*), the Lieutenant-Governor is pleased to extend all the sections of that Act to the Khulna Municipality, with effect from the 1st October 1902.

Khulna.

No. 2316J.D.—The 1st September 1902.—In exercise of the power conferred by section 1 (2) of Act XI of 1890 (The Prevention of Cruelty to Animals Act, 1890), the Lieutenant-Governor is pleased to extend the whole of that Act (except section 1, which is already in force), from the date on which this notification is published in the *Calcutta Gazette*, to the town of Gaibanda, in the district of Rangpur, within the boundaries specified below:—

Rangpur.

On the north by the Ghagat, on the south by the District Board culvert in the first mile of Gaibanda-Jumarbari road, by the house of Nadia Shaha, and by the police-station, on the east by the Ghagat, and on the west by the junction of the District Board road (Gaibanda-Sadullapara road) with the Local Board.

2. So much of the notification of the 21st June 1892, published at pages 652 and 653, Part I of the *Calcutta Gazette* of the 22nd idem, as relates to the town of Gaibanda, is hereby cancelled.

No. 2318J.D.—The 1st September 1902.—In exercise of the power conferred by section 34 of Act V of 1861 (The Police Act, 1861), the Lieutenant-Governor is pleased to extend that section to the town of Gaibanda, in the district of Rangpur, within the boundaries specified below:—

Rangpur.

On the north by the Ghagat, on the south by the District Board culvert in the first mile of Gaibanda-Jumarbari road, by the house of Nadia Shaha, and by the police-station, on the east by the Ghagat, and on the west by the junction of the District Board road (Gaibanda-Sadullapara road) with the Local Board.

2. The notification of the 15th September 1886, published at page 1019, Part I of the *Calcutta Gazette* of the 22nd idem, by which section 34 of Act V of 1861 was extended to Gaibanda, is hereby cancelled.

C. E. BUCKLAND,
Chief Secy. to the Govt. of Bengal.

PROCLAMATION—No. 4065J.

The 29th August 1902.—Under section 15, Act V of 1861 (as amended by Act VIII of 1895), the Lieutenant-Governor declares that the conduct of the inhabitants of village Mahrail, in the jurisdiction of the Jhanjharpur outpost, subordinate to the Madhubani police-station, within the Madhubani subdivision, in the district of Darbhanga, has rendered it expedient to increase the number of police force by the appointment of an additional police force, to be quartered therein, at the cost of the inhabitants of the aforesaid village.

Darbhanga.

The proclamation shall remain in force for a period of six months, with effect from this date.

C. E. BUCKLAND,
Chief Secy. to the Govt. of Bengal.

PUBLIC WORKS DEPARTMENT.

ESTABLISHMENT.

The 2nd September 1902.

No. 178.—The following notification issued by the Government of India in the Public Works Department is republished for information:—

No. 304, dated the 28th August 1902.—Mr. B. K Finnimore, Executive Engineer, first grade, Bengal, is appointed to officiate as a Superintending Engineer, with effect from the 18th August 1902 during the absence of Mr. A. F. Higgins, on privilege leave.

No. 179.—With reference to Government of India, Public Works Department Notification No. 304, dated the 28th August 1902, Mr. B. K. Finnimore (Under-Secretary to Government) is appointed Officiating Superintending Engineer, Northern Circle, during the absence of Mr. A. F. Higgins, on privilege leave, or until further orders.

No. 180.—With reference to Bengal Government Notification No. 179, dated 2nd September 1902, Mr. H. H. Green, Executive Engineer, second grade (Inspector of Works, Bhagalpur Circle), is appointed to officiate as Under-Secretary to this Department, until further orders.

No. 181.—With reference to Bengal Government Notification No. 180, dated 2nd September 1902, Rai K. C. Banerjee Bahadur, Inspector of Works, Burdwan Circle, is appointed to officiate as Inspector of Works, Bhagalpur Circle, in addition to his own duties, until further orders.

No. 182.—With reference to Bengal Government Notification No. 180, dated 2nd September 1902, Babu Madhusudan Sen Gupta, Executive Engineer, Upper Rajshahi Division, is appointed to the charge of the Imperial and Provincial Civil Works and Repairs in the districts of Purnea and Bhagalpur, in addition to his own duties, until further orders.

No. 183.—The following extract from a notification issued by the Government of India in the Public Works Department is republished for information:—

No. 294, dated the 23rd August 1902.—The following promotions are ordered in the Superior Accounts Branch:—

NAMES.	From—	To—	Nature of promotion.	With effect from—
*	*	*	*	*
F. W. Eicke ...	Examiner, Class IV, 1st grade, sub. *pro tem.*	Examiner, Class IV, 1st grade.	Permanent ...	21st April 1902.
*	*	*	*	*

W. A. INGLIS,
Offg. Secy. to the Govt. of Bengal.

CIVIL BUILDINGS.

The 29th August 1902.

No 177.—Declaration.—Whereas it appears to the Lieutenant-Governor of Bengal that land is required to be taken by Government at the public expense for a public purpose, viz., for the construction of a third class mortuary in the village of Deodharpore Tikari, pargana Sanout, zilla Gaya, it is hereby declared that for the above purpose a piece of land measuring, more or less, 3 cottahs 7·5 chitaks of standard measurement, bounded on the north, south and east by the jagir of the late Bakshu khansama, and on the west by Hospital road land, is required within the aforesaid village of Deodharpore Tikari.

This declaration is made, under the provisions of section 6 of Act I of 1894, to all whom it may concern.

A plan of the land may be inspected in the office of the Collector of Gaya.

W. A. INGLIS,
Offg. Secy. to the Govt. of Bengal.

RAILWAY DEPARTMENT.

The 2nd September 1902.

No. 178R.—Notification.—The following papers are published for general information. It is to be understood that Government do not hold itself responsible for the reports or figures or for the opinions expressed.

W. A. INGLIS,
Offg. Secy. to the Govt. of Bengal.

SHIBNIBASH (KISHENGUNJ) MAGURA RAILWAY SURVEY.
REPORT AND ESTIMATES.

1.—PRELIMINARY.

THIS is a revised project for a standard guage line from Shibnibash (Kishengunj) station on the Eastern Bengal State Railway to Magura *vid* Kotchandpur and Jhenida, on the alignment surveyed in 1897-98 for a 2′ 6″ guage line, with alternatives as required by the Director of Railway Construction.

The orders of Government are as follows:—

No. 1110R.C., dated Simla, the 26th July 1900.

From—T. W. BARTLETT, Esq., Director of Railway Construction,
To—The Manager, Eastern Bengal State Railway.

"WITH reference to your letter No. 788D.G.R., dated the 22nd October 1897, to the address of the Director-General of Railways, forwarding a report and an approximate estimate of the cost of constructing a branch line on the 2′ 6″ guage from Kishengunj to Magura *vid* Kotchandpur and Jhenida, I have the honour to request that with the information then collected an approximate estimate for a branch on the 5′ 6″ guage may now be compiled and submitted as soon as practicable.

2. It has been proposed that a preferable line would be *vid* Moheshpur and Kotchandpur to Magura, with a branch from Kaliganj to Sulkopa *vid* Jhenida, the alignment to Magura and the site for the station there being selected with a view to a convenient crossing of the river, and to a future extension to Faridpur possibly *vid* Mahomedpur, and I request that this proposal may be considered as far as available information permits, and an approximate estimate for the branch prepared.

3. The services of Mr. Bartlett, who is under your orders, may be utilized for this work."

2.—REPORT.

(*a*) The special object of the Railway is to connect the fertile and thickly populated districts of Kotchandpur, Jhenida, and Magura with the existing railway at Shibnibash. Special object.

(*b*) The former project for a 2′ 6″ gauge line was submitted to the Director-General of Railways with Manager, Eastern Bengal State Railway's No. 788D.G.R., dated 22nd October 1897. Previous reports, &c.

The railway was estimated to cost Rs. 27,324 per mile, and with gross earnings of Rs. 55 per mile per week to give a return of 5·2 per cent. on the capital outlay.

General description of the country.

The general aspect of the country traversed by the proposed line is that of a vast alluvial plain, dotted with villages and clusters of trees, generally well wooded and covered in many parts with groves or rather forests of date palms. It is the region of the *aus* or autumn rice and winter green crops. The configuration of the country is that everywhere characteristic of deltaic lands, the margins of the rivers and channels are the highest land, from which the ground slopes away, so that the surface seems to be a series of basins into which the waters flow through the khals, which, leading from the rivers, penetrate the high marginal land. The rivers are beyond the reach of the tides, and except during the height of the rains remain within the bounds of their high banks.

The towns and villages are large and numerous, and the dwellings of the people comfortable.

The average rainfall is 65 inches.

The gauge.

The gauge is 5′ 6″, the same as that of the Eastern Bengal State Railway, with which connection will be made at Shibnibash station. Gauge.

The fixed point from which the mileage is reckoned is 700 feet north of the centre of Shibnibash station. Fixed point.

The total lengths of the different alternatives are— Total length.

No. I	...	...	...	63·75 miles.
„ II	...	...	...	67·75 „
„ III	...	...	...	67·00 „

all in the Province of Bengal.

3.—LOCATION.

Scheme No. 1.—Total length 63·75 miles. Shibnibash station, being on a high bank surrounded with very deep borrow-pits, is a most inconvenient place to make a terminal station, and it is therefore proposed to make Bogoola, which is only 7½ miles distant on the main line, the terminus for trains running, and start the extension at Shibnibash from the end of the present dead end siding alongside the down line, and continue it parallel to the main line for about a mile, then curving to the right run eastward over low paddy fields towards Jibannagar which is reached at mile 7.

Jibannagar is the centre of four villages—Jibannagar, Dowlatganj, Narainpur, and Chanderpur—none of which are important; but there is a police thana at Dowlatganj. Continuing in the same direction for about half a mile, the line then curves to the left on to a high ground where very little banks will be required, and continues on it for about five miles passing on the right at mile 10, the village of Hansadah, where a large weekly *hât* is held and crossing the boundary of the Nadia and Jessore districts at mile 11

The line curves to the right again at mile 12, to avoid the large deep Poorundurpur jheel, and reaches Khallispur station at mile 15.

There are several large villages near Khallispur. Just beyond the station, the line crosses the Bhairab or Cobaduk river with a bridge of 5 spans of 40 feet girders; this river is not navigable in the dry weather, being too shallow, while the district board bridge blocks it in the floods.

The neck of the large Kagmaree Baor, known as the Baramasi khal, is crossed at mile 18½ with 5 spans of 20 feet girders, and Kotchandpur station on fairly high ground is reached at mile 20.

Kotchandpur, population 9,500, contains many pucca houses and is the seat of considerable trade. It is situated on a bend of the Cobaduk river and is a large sugar manufacturing centre, the country for miles round being covered with date palms from which the sugar is obtained. At present nearly all the trade is carried on by boats on the Cobaduk, but some carts ply on the pucca road between this place and Shibnibash; the road in the Nadia district is, however, in very bad repair.

About 8 miles due east of Kotchandpur, and connected with it by a pucca road, is the town of Kaliganj, a centre of considerable trade in sugar and country produce A kutcha road from Chooadangah, and pucca ones from Jhenida, Jessore, and Kotchandpur, all meet here.

From Kotchandpur, the line runs in a general north-easterly direction, crossing the Poora beel, to avoid which would entail too great a detour, and the Chitra river on 3 × 20 feet girders at mile 25 4 This river is navigable during a portion of the rainy season only, being blocked at high flood by a masonry bridge at Kaliganj, situated some 7 miles below the proposed Railway crossing.

From the Chitra river, the line runs north-east through a very thickly populated country to Durgapur station at mile 27¾. Durgapur is the centre of a number of large villages; from this place to Magura, the line runs through indigo and jute lands, but indigo cultivation is fast disappearing. Leaving Durgapur, the line runs in a northerly direction for about 4 miles, crossing the Raja Ram khal and then, curving to the right, reaches Jhenida station at mile 34½.

Jhenida is a very unhealthy place of no commercial importance; but as it is the head-quarters of a subdivision with two Munsifs' cutcherries, a Subdivisional Officer's court and a police-station, there will probably be considerable passenger traffic to and from it. From Jhenida, the line runs eastward over low paddy-fields, crossing the Dhubaghata khal at mile 35·07 with a bridge of 5 spans of 40 feet girders. In the former survey, the line continued in the same direction to mile 42, where it curved slightly to the south, reaching Gopalpur station at mile 43 42. A much better line can, however, be obtained by turning north-eastward at mile 37, crossing the Jhenida-Magura road about mile 39½, and continuing on the north side of the road up to about mile 44·5, a very convenient site for a station being between miles 43 and 44 adjacent to the road and river.

From mile 44·5, the line would run on the south of, and approximately parallel to, the road to mile 49·5 there crossing it. A sharp curve is necessary at mile 50·5 to get the station suitably situated for an extension towards Faridpur. The end of the line will be at mile 51·75.

Magura town is the centre of a thickly populated district. The census of 1891 showed 748 per square mile. It is the head-quarters of a subdivision and contains the cutcherries of the Subdivisional Officer and two Munsifs, a police-station, charitable dispensary, Sub-Registrar's office, high class English school, &c. It is situated on a bend of the Nobogunga river, a river that is navigable for small steamers throughout the year up to within 6 miles of Magura, but not right up to the town. The Mocheekhalee khal, joining the Nobogunga river at Magura, forms a communicating channel with the Gorai river, but lately it has silted up a good deal and does not bring down enough water to make the Nobogunga navigable throughout the year.

There appears to be a general idea throughout the district that the rivers and water channels are gradually diminishing.

The Gorai or Mudhoomutee is the largest river in the district navigable for the greater part of the year, and it appears desirable to carry on the line for some 8 miles beyond

Magura, so as to tap the traffic on it: this could be done by extending the line about 6 miles to Beenodpur on the Nobogunga in the Faridpur direction, building a bridge across that river about 7 spans of 60 feet girders, and running a temporary line for about 2 miles in a northerly direction to the bank of the Gorai near Alookhdeea village.

If it should be intended to continue the line to Faridpur, the best alignment will be in a south-easterly direction from Beenodpur to Beeljanee, where the old Calcutta-Dacca road crosses the Gorai and there is a favourable site for a bridge over that river.

Between Beenodpur and Beeljanee the land is low, and a high bank will be necessary, but there are no other difficulties. Mahomedpur will lie about two miles south of this alignment, and there is no object in going any closer to it; once an important place; it is now but a mass of ruins buried in dense cane jungle.

From this alignment a branch to Sulkopa would take off at Jhenida and cross the Nobogunga about one mile north of the junction. From the Nobogunga bridge the line would run in a northerly direction, crossing the Jhenida-Sulkopa road about three-fourths of a mile from the bridge, and then run parallel to it for about 5 miles to Battay, where there is a *hât* and where an intermediate station might be placed. From Battay the line would turn slightly eastward and run straight to the bank of the Koomar river opposite Sulkopa at (the 12th mile from Jhenida) mile 45 from Shibnibash.

Between the Nobogunga and Kumar rivers there are no channels that will require thing larger than a few 20 feet girders, and the ground is all fairly high.

Sulkopa itself is situated on the left or north bank of the Koomar river. It is occupied by a number of Shahas, Hindu merchants, whose head-quarters are in Calcutta. They do a considerable amount of both import and export trade along the river, but there is not much actual local traffic and the bazar is not a large one.

There would be no advantage in crossing the river which would require a large high bridge, and it is proposed to terminate the line on the south bank where there is a large open plain very suitable for a station site.

The traders are quite agreeable to this proposal.

Scheme No. II.—Total length 67·75 miles In this scheme, which is the most direct to Magura, the alignment will be the same as in scheme No I.

From Shibnibash to mile 18, where it will continue in the previous direction instead of turning north-east and reach a site for Kotchandpur station at mile 19¼. To get past the town it will be necessary to go to the north of it, and then turn east about mile 21: from this point the line will run straight for about 5 miles and then run north-east for about 4 miles to mile 30, the Chitra being crossed at mile 27·60 and Kaliganj station placed at mile 28 5 in the open plain north-east of the bazar.

The embankment of the Kotchandpur-Kaliganj road is from 5 to 6 feet in height, but flood water is said not to rise within 3 feet of its surface. There are no large bridges and the smaller openings vary from 2 feet to 2 × 8 feet.

The Chitra river itself is crossed by a bridge of 2 spans 15 feet arches, which stops all boating traffic above it.

From mile 30, the line runs nearly due east for 5 miles, and then turns north-east again at mile 35 for about 4 miles.

The Bang nadi is crossed at mile 30·40; up to mile 33 the ground is fairly high, but from there onwards is a stretch of low country for about 6 miles, where the water lies from 4 to 7 feet deep in the rainy season; moderate bank and a good many flood openings will be necessary.

From Tekurea at mile 39, where the line turns east onwards, the country is a good deal higher, and probably nothing more than a four feet bank will be required.

It is proposed to place a station at mile 39½. At mile 42 the line turns north east again and reaches the alignment of scheme No. I at mile 46.

In this scheme, the Sulkopa branch would leave the main line at Kaliganj and be about 19·75 miles long.

From Kaliganj to Jhenida, the country is rather low and a 7 feet bank would probably be necessary. The Bang nadi is the only waterway, about 5 miles from Kaliganj, which the road crosses rather higher up with 2 spans of 20 feet girders.

Jhenida is reached at mile 37¼. From there onwards the alignment would be the same as for the branch in scheme No. I.

Scheme No. III is the same as No. II, as far as Sulkopa *viâ* Kaliganj and Jhenida, and as No. I from Jhenida to Magura. If the line be taken *viâ* Moheshpur instead of Khallispur, the through distance will be increased by two miles in all three schemes: but as the country between mile 7, where the diversion would leave the alignment, and Kotchandpur *viâ* Moheshpur is higher and the waterways fewer, the cost would be no greater except in permanent-way.

Without knowing the main object of making the railway, it is difficult to decide which alignment to recommend. If the idea is to make a line to Faridpur, I should recommend scheme No. II, but would at the same time point out that a line from Faridpur to Dum-Dum Junction *viâ* Jessore and the Bengal Central Railway would be 20 miles shorter than *viâ* Magura and Shibnibash.

If the main object is to open out the country and make a paying line, I should recommend scheme No. III, but *viâ* Moheshpur instead of Khallispur.

4.—ALTERNATIVE ROUTES.

Paragraph 2 of Director of Railway Construction's No. 1110R.C., dated 26th July 1900, to Manager, Eastern Bengal State Railway, is as follows:—

"It has been proposed that a preferable line would be *vid* Moheshpur and Kotchandpur to Magura, with a branch from Kaliganj to Sulkopa *vid* Jhenida, the alignment to Magura and the site for the station there being selected with a view to a convenient crossing of the river and to a future extension to Faridpur possibly *vid* Mahomedpur, and I request that this proposal may be considered as far as available information permits, and an approximate estimate for the branch prepared."

The alternative routes are—

	Miles.
I.—*Vid* Khallispur, Durgapur and Jhenida, as already surveyed and now improved	51 75
Branch—Jhenida to Sulkopa	12·0
Total ...	63·75
II.—*Vid* Khallispur and Kaliganj direct	48 00
Branch—Kaliganj to Sulkopa	19·75
Total ...	67·75
III.—*Vid* Khallispur, Kaliganj and Jhenida	55·0
Branch—Jhenida to Sulkopa	12·0
Total ...	67·0

A detour *vid* Moheshpur would add 2 miles in length to any of the above; but as the country is higher and there would be less bridging, the extra cost would only be in permanent-way materials.

5.—GRADIENTS AND CURVES.

Gradients. The ruling gradient has been taken as 1 in 500 or 0·2 per cent.

Curves. The sharpest curve on the 2′ 6″ gauge is 1,433 feet radius or 4°. On the standard gauge, it is proposed that none should be sharper than 2,865 feet radius or 2°.

6.—CONSTRUCTION AND ENGINEERING.

Datum. (*a*) The datum used is mean sea-level. There is a difference of level of 1·61 feet only between the starting and terminal points: the major portion of the line is level.

Bench marks, &c. (*b*) On Lieutenant King's alignment, branded jack-wood pegs have been put in at every 10 chains, and pieces of old iron rails at every apex and at every mile on the straight. Bench marks on pieces of iron rails have been put in at every half mile. The other alignments are not marked out in any way.

General character of works. (*c*) The general character of the works will be moderately heavy, owing to the country generally being low and subject to floods.

Linear feet of waterway per mile. (*d*) The amount of waterway, 28·68 l. ft. per mile, is small for a line like this crossing the drainage of the country, but the peculiar Z alignment necessitated by the three obligatory points adds considerably to the length of the line.

Description of important works. (*e*) The only works of any importance are the following bridges:—

IN SCHEME No. I—

	Miles.	Spans.	Feet girders.
1. Cobaduk river	15·32	5	40
2. Baramasi khal...	18·52	5	20
3. Dhubaghata khal	35·07	5	40
4. Alumkhali khal	43·51	5	20
5. Kasinathpur Haor	48·77	4	40
On branch—			
6. Nobogunga	31·45	3	40

IN SCHEME No. II—

	Miles.	Spans.	Feet girders.
1. Cobaduk river	15·32	5	40
2. Baramasi khal	18·52	5	20
3. Khalseekhali	37	3	40
4. Patekel khal	43·5	5	20
5. Kasinathpur Haor	46	4	40
On branch—			
6. Nobogunga	37·5	3	40

	Miles.	Spans.	Feet girders.
IN SCHEME No. III—			
1. Cobaduk river	15·32	5	40
2. Baramasi khal	18·52	5	20
3. Dhubaghata khal	38·60	5	40
4. Alumkhali khal	47·5	5	20
5. Kasinathpur Haor	53	4	40
On branch—			
6. Nobogunga	37·5	3	40

The foundations will, in most cases, have to be on wells or blocks sunk from 25 to 30 feet below low water. No particular difficulties are anticipated. Abutments and piers will be of brickwork.

(*f*) Fencing is proposed of five wires with iron standards of usual type. Fencing.
It is proposed to fence the line throughout.

(*g*) (1) It is proposed to lay the line with steel rails 60 lbs. per yard, flat-footed, with 4-holed fish-plates on sâl sleepers $9\frac{1}{2}' \times 10'' \times 5''$. Permanent way.

(2) Ballast of broken brick, 12 c. ft. per foot run, or 79,200 c. ft. per mile, has been estimated for: this quantity includes 25 per cent. for maintenance and wastage until line is opened.

(*h*) Passenger platforms at Kotchandpur, Sulkopa and Magura are proposed 600 feet × 30 feet, 2′ 6″ above rail level; at the intermediate stations, 600′ × 30′, 1′ 2″ above rail level. Platforms.
Goods platforms at Kotchandpur and Magura are proposed, 200′ × 40′, and at Jhenida and Sulkopa 100′ × 40′, all at rail level.

(*i*) No workshops are proposed. All repairs can be carried out in the Eastern Bengal State Railway shops at Kanchrapara. Workshops.

(*j*) Water is obtainable from wells which must be sunk where required. It is proposed to make Durgapur mile $27\frac{7}{8}$ and Magura mile $51\frac{1}{2}$, also Sulkopa the watering stations, sinking 12 feet wells for the purpose; at the other stations 6 feet wells for drinking purposes will be necessary Water supply.

(*k*) Bogoola on the main line, where there are watering arrangements, turn-table, &c., being only $7\frac{1}{2}$ miles distant, it will be best to run trains to and from that station instead of from Shibnibash, where the bank is very high and terminal arrangements would be very expensive. Engine changing stations.

The run to and from Bogoola to Sulkopa and Magura would be 142·5 miles by scheme No. I, 150·5 miles by scheme No. II, and 150 miles by scheme No. III.

A small running-shed for one engine and a triangle will be necessary at Magura and Sulkopa, and have been provided in the estimate

Judging from the number of engines required on the Bengal Central Railway, it appears probable that about 7 will be required on the proposed line.

7.—LABOUR AND MATERIALS.

(*a*) All work could be carried out by petty contract. Some coolies could be obtained locally for earthwork, but probably a number would have to be imported. Labour.

Bricklayers from the Nadia district travel to other parts of Bengal, and could therefore be obtained locally.

Smiths and carpenters would come from Calcutta, bridge-erectors from the Chittagong district.

No military or prison labour would be required.

(*b*) No stone is avilable, but there is good brick-earth all along the line. Wood fuel is scarce, but coal could be obtained *vid* the Eastern Bengal State Railway. Materials. roofing, &c.

Lime would have to be imported from Sylhet or Kutni.

Ballast must be of broken brick prepared locally.

Sâl sleepers would be obtained from Chota Nagpur, or possibly jharrah wood from Western Australia.

Teak timber would be obtained from Calcutta.

All roofing would be of corrugated iron.

(*c*) A depôt would be formed at Shibnibash (Kishenganj), which is only 65 miles from Calcutta, and all imported materials delivered there; small materials being thence carted by the road that runs approximately parallel to the proposed line. The line will be laid telescopically from Kishenganj, and girders railed to site as the bridges are reached. During the rains it might be possible to send coal, &c., by boat to various points on the line. Depôts and means of transport.

(*d*) In the previous estimate the rates for local work are those current on the open line, Eastern Section, Eastern Bengal State Railway. It is not, however, probable that on construction, these rates will be sufficient, as nothing has been provided for carting the materials. A schedule of local Public Works Department rates is attached in the appendix. Prevailing rates and wages.

(*e*) The local conditions that are likely to affect the construction are (*i*) the short working season, (*ii*) the unhealthiness of the district during the working season. Local conditions.

8.—ARRANGEMENT OF STAFF.

Division of the line

(*a*) The line would form one division with an Executive Engineer under the orders of the Engineer-in-Chief, Eastern Bengal State Railway, and two Assistant Engineers, each in charge of a subdivision of about half the total length. The head quarters of the Executive Engineer and one Assistant Engineer would be at Kishenganj and of the other at Gopalpur.

Staff quarters

(*b*) It would be necessary to build temporary quarters and offices for construction, no suitable accommodation being obtainable.

Petty contractors would house their own men.

Sanitary condition,

(*c*) The district is unhealthy. The people suffer much from malarial fever; cholera is endemic, and breaks out in epidemic form nearly every year.

An Assistant Surgeon with two Hospital Assistants will be required. Dispensaries should be placed at the subdivisional head-quarters at Kishenganj and Gopalpur.

9.—RELATIONS WITH THE PUBLIC AND GOVERNMENT DEPARTMENTS.

Interference with Military buildings, &c.

(*a*) There are no military cantonments, buildings or communications.

Bridges can be made passable for guns and other military traffic by planking over the sleepers

Works proposed for accommodation of the public.

(*b*) It is proposed to place stations as follows:—

Stations.

		Miles.
SCHEME No. I—		
1.	Shibnibash	0 00
2.	Jibannagar	6 81
3.	Khallispur	14·95
4.	Kotchandpur ...	19·84
5.	Durgapur	27·87
6.	Jhenida	34·21
7.	Gopalpur	43·42
8.	Magura	51 50
9.	Battay	39·40
10.	Sulkopa	44·50
SCHEME No. II—		
1.	Shibnibash	0·00
2.	Jibannagar	6·81
3.	Khallispur	14·95
4.	Kotchandpur	19·25
5.	Kaliganj	28·5
6.	Tekurea	39·5
7.	Magura	47·75
On branch—		
1.	Kaliganj	28·5
2	Jhenida	37·25
3.	Battay	42·75
4.	Sulkopa	48
SCHEME No. III—		
1.	Shibnibash	0·00
2.	Jibannagar	6·81
3.	Khallispur	14·95
4.	Kotchandpur	19·25
5.	Kaliganj	28·5
6.	Jhenida	37·25
7.	Gopalpur	47
8.	Magura	54 75
On branch—		
1.	Jhenida	37 25
2.	Battay	42·75
3.	Sulkopa	48

(*c*) The station sites have been selected near large towns or clusters of villages, and also with a view to dividing the line as evenly as possible.

At Magura, a station site has been selected that is convenient to the public, and from which an extension is possible in the Faridpur direction *viâ* Binodpur, where there is a good site for crossing the Nobogunga river.

Goods Sheds

(*d*) Goods sheds are estimated for Kotchandpur, Jhenida, Magura, Kaliganj, and Sulkopa.

Level Crossings.

(*e*) Level crossings are estimated at one per every two miles.

Adaptation of Railway bridges for ordinary traffic.

(*f*) It is not proposed to adapt the Railway bridges to take ordinary traffic or foot passengers.

Interference with religious edifices

(*g*) No religious edifices or places considered sacred are interfered with.

10.—LAND.

The rates quoted in the previous estimate are—

			Rs.	
Arable	...	...	80	per acre.
Homestead	...	...	157	ditto.

As remarked by the Manager, Eastern Bengal State Railway, in his No. 788D.G.R., dated 22nd October 1897, when forwarding the project, these rates seem low.

To them must be added 10 per cent. for value of trees and huts on homested land and 15 per cent. for compulsory acquisition, making—

			Rs.	
Arable	...	...	92	per acre.
Homestead	...	...	197	ditto.

On the Bengal Central, a line through an adjacent and very similar country, land has cost Rs. 6,048 per mile, and it is considered imprudent to estimate for less than Rs. 6,000 per mile in the proposed line.

11.—TRAFFIC AND STATISTICS.

No traffic recording posts were established in connection with the former survey, and there is no reliable information available regarding the trade of the district.

The report on the river-borne traffic of the Lower Provinces of Bengal and on the inland trade of Calcutta for the year 1898-99 gives a certain amount of information; but as native boats are not registered, it cannot be taken to show anything like what the traffic is except by Railway.

The registered traffic booked by railway to the nearest existing railway stations and thence carted to the principal places on the proposed line is exceedingly small, amounting in 1898-99 to 1,862 tons only, and by boat 5,355 tons.

The same report shows that the traffic of the town of Kotchandpur in 1898-99 amounted to 1,714 tons by rail and 1,637 tons by boat; but the Chairman of the Kotchandpur Municipality supplied a statement (printed as Appendix A of the former report) showing that in 1896-97 the trade amounted to 51,772 tons by boat and 3,969 tons by rail, a very different story.

The adjacent Bengal Central Railway opened in 1882-84, runs through very similar country to that between Kishenganj and Magura, and the condition of the people is much the same; only that, being nearer Calcutta, the suburban passenger traffic is heavier than can be expected on the new line and the boat competition probably greater.

For the first five years the average gross earnings per mile per week of the Bengal Central Railway amounted to Rs. 91 only, and for 15 years to Rs. 119. For 1898 they reached Rs. 158, of which 73 per cent. was for coaching and 27 per cent. for goods.

The means of communication by water in flood-time are so easily available that boat competition will be severe, and it is hardly likely the proposed line will pay a satisfactory dividend at first.

The Manager, Eastern Bengal State Railway, in his No. 788D.G.R., dated 22nd October 1897, forwarding the former project to the Director-General of Railways, said: "With river competition, it is difficult to say what the goods traffic will be. I should expect the line to earn Rs. 40 per mile per week from passenger traffic within a short period of its opening, and the goods traffic should be at least Rs. 15 per mile per week and it may be considerably more."

12.—CONCLUSIONS.

The Manager's estimate appears very low, and it does not seem too much to expect that the average gross earnings for the first five years will at least amount to Rs. 90 per mile per week.

Allowing 50 per cent. for working expenses, Rs. 45 per mile per week net earnings would give a return of 2·64 per cent. on a capital outlay of Rs. 88,628 per mile.

EASTERN BENGAL STATE RAILWAY EXTENSION SURVEYS.

Kishenganj-Magura Line.

5' 6" Gauge.

	Miles.
Vid Khallispur, Durgapur and Jhenida, as already surveyed and now improved	51·75
Branch—Jhenida to Sulkopa	12·00
TOTAL LENGTH ...	63·75

FORM E. I. ABSTRACT OF COST OF RAILWAY. SCHEME No. I.

HEADS OF ACCOUNT.	TOTAL COST IN RUPEES.			
	SUB-HEADS.		MAIN-HEADS.	
	Total cost.	Rate per mile.	Total cost.	Rate per mile.
	Rs.	Rs.	Rs.	Rs.
I.—PRELIMINARY EXPENSES ...	...	...	38,250	600
(*a*) Survey expenses ...				
(*b*) Plant	38,250	600	...	...
(*c*) Establishment ...				
II.—LAND	3,82,500	6,000	3,82,500	6,000
III.—FORMATION	...	...	6,97,935	10,948
(*a*) Earthwork	6,97,935	10,948	...	...
(*b*) Tunnels	...	...	...	...
IV.—BRIDGEWORK	...	...	4,28,591	6,723
(*a*) Major bridges ...	2,15,156	3,375	...	...
(*b*) Minor „ ...	2,13,435	3,348	...	...
V.—FENCING, &c.	...	...	2,53,279	3,973
(*a*) Fencing	2,28,480	3,584	...	...
(*b*) Road crossings ...	23,205	364	...	...
(*c*) Mile and gradient posts ...	1,594	25	...	...
VI.—ELECTRIC TELEGRAPH ...	...	...	...	...
VII.—BALLAST AND PERMANENT-WAY	...	...	24,95,366	39,143
(*a*) Ballast	6,35,205	9,964	...	...
(*b*) Permanent-way ...	18,60,161	29,179	...	...
VIII.—STATIONS AND BUILDINGS ...	...	...	4,50,458	7,066
(*a*) Stations and offices ...	1,69,384	2,657	...	...
(*b*) Workshops, Store-buildings, &c.	...	...	...	...
(*c*) Staff quarters	1,12,965	1,772	...	...
(*d*) Station machinery ...	1,68,109	2,637	...	...
IX.—PLANT	...	...	63,750	1,000
(*a*) Engineering	9,563	150	...	...
(*b*) Construction	31,875	500	...	...
(*c*) Locomotive	6,375	100	...	...
(*d*) Carriage and Wagon ...	3,187	50	...	...
(*e*) Station and office furniture	12,750	200	...	...
(*f*) Steamers or boats required for the general purposes of the Railway, but not for public traffic ...	...	...	...	...
X.—FERRIES, &c.	...	...	...	...
(*a*) Ferries	...	...	...	...
(*b*) Floating bridges ...	...	...	...	...
XI.—ROLLING-STOCK	...	...	6,37,500	10,000
(*a*) Locomotive	2,77,312	4,350	...	...
(*b*) Carriage and Wagon ...	3,60,188	5,650	...	...
XII.—GENERAL CHARGES ...	...	...	2,02,406	3,175
(*a*) Direction or General ...	6,375	100	...	...
(*b*) Engineering	1,72,125	2,700	...	...
(*c*) Stores	11,156	175	...	...
(*d*) Audit and Account ...	6,375	100	...	...
(*e*) Medical and Sanitation ...	6,375	100	...	...
(*f*) Locomotive	...	...	...	...
(*g*) Traffic	...	...	...	...
TOTAL EXPENDITURE ...			Rs. 56,50,035	
Total rate per mile ...			„ 88,628	

English expenditure ... Rs. 12,50,000.
Indian ditto ... „ 44,00,035.

EASTERN BENGAL STATE RAILWAY EXTENSION SURVEYS.

Kishenganj-Magura Line via *Khallispur, Durgapur and Jhenida, including Branch—Jhenida to Sulkopa.*

5′ 6″ Gauge.

Length ... ... 63·75 miles.

FORM R. I. CURVE ABSTRACT. SCHEME No. I.

ANGLE OF CURVATURE.	Number of each.	Total length.	Total Curvature.
		Miles.	Degrees.
Curves not set out	.....	.....	.....
Total ...	.....	.....	.....

FORM R. II. GRADIENT ABSTRACT. SCHEME No. I.

INCLINATION.	Number of each.	Total length.	Percentage of total length of line.
		Miles.	
1 in 500, or 0·20 per cent....	13	3·22	6·22
1 in 1,000, or 0·10 per cent.	13	6·72	12·98
Flatter than 1 in 1,000, including levels ...	.....	41·81	80·80
The above gradient abstract refers to the section of main line between Shibnibash and Magura (51·75 miles), and the length (12 miles) between Jhenida and Sulkopa, which has not been surveyed, has not been included in the abstract.			
TOTAL ...	.....	51·75	100·00

FORM R. III. BRIDGE ABSTRACT SCHEME No. I.

TYPE OF BRIDGE.		Total number of spans.	WATER-WAY.
Class.	Spans.		Lineal feet.
Open tops ...	2 feet, 2 of two spans	4	8
Flat tops ...	Nil	...	...
Arched culverts ...	4 feet, 2 of two spans	4	16
	6 „ 1 of one span	1	6
	8 „ 6 of one „	6	48
Girder bridges ...	6 „ 12 of one „	12	72
	6 „ 1 of three spans	3	18
	12 „ 23 of one span	23	276
	12 „ 1 of two spans	2	24
	20 „ 6 of one span	6	120
	20 „ 5 of two spans	10	200
	20 „ 2 of three „	6	120
	20 „ 2 of five „	10	200
	40 „ 1 of one span	1	40
	40 „ 1 of three spans	3	120
	40 „ 1 of four „	4	160
	40 „ 2 of five „	10	400
	TOTAL FOR WHOLE LINE ...	.....	1,828
	Average per mile ...	.....	28·68

EASTERN BENGAL STATE RAILWAY EXTENSION SURVEYS.

Kishenganj-Magura Line viâ *Khallispur, Durgapur and Jhenida, including Branch—Jhenida to Sulkopa.*

5' 6" Gauge.

Length ... ... 63·75 miles.

FORM R. IV. IMPORTANT BRIDGES (FOR BRIDGES HAVING A TOTAL WATERWAY OF 1,200 SQUARE FEET OR UPWARDS). SCHEME No. I.

NAME OF RIVER.	Mileage.	Drainage area.	Rise of ordinary flood above low water.	Slope of bed per mile.	Mean velocity in flood per second.	Sectional area in flood.	Discharge per second.	Span.		Height of underside of Girders.		Average depth of founds.
										Above low water.	Above flood level.	
		Sq. m.	Feet.	Feet.	Feet	Sq. ft.	C. feet.	Feet.	No.	Feet.	Feet.	Feet.
Bhairab or Cobaduk ...	15·32		14	..	.....	.....	..	40	5	19·25	5 25	25
Baramasi khal	18·32	...	16	.....	.....	.....	.....	20	5	19·25	3 25	25
Dhubaahata khal	35·07	.....	15	.....	.....	.....	. ...	40	5	20·25	5·25	7
Kasinathpur Haor	48·77	.....	13	.....	.....	... '	.....	40	4	18·25	5·25	6
JHENIDA-SULKOPA BRANCH.												
Noboganga	34·45	...	12	...	.. ...	.....	....	40	3	.....	.....	.....

EASTERN BENGAL STATE RAILWAY EXTENSION SURVEYS.

Kishenganj-Magura Line viâ *Khallispur, Durgapur and Jhenida, including Branch—Jhenida to Sulkopa.*

5' 6" Gauge.

Length ... ... 63·75 miles.

FORM R. V. LIST OF STATIONS, STATION BUILDINGS, &c. SCHEME No. I.

NAME OF STATION.	Class.	Mileage.	Distance apart.	Station building.	Goods shed.	PASSENGER PLATFORM.		Goods platform.	Well—diameter.
						Length.	Height above rails		
			Miles.	Sq. ft.	Sq. ft.	Feet.	Feet.	Feet.	Feet.
Shibnibash (Kishenganj.	3rd	0	...	...	...	600	2·5	...	...
Jibanmagar ...	,,	6 7/8	6 7/8	1,825	...	600	1·16	...	6
Khallishpur ...	,,	15	8 1/8	1,825	...	600	1·16	...	6
Kotchandpur ...	,,	19 7/8	4 7/8	2,490	2,000	600	2·5	200	6
Durgapur ...	,,	27 1/8	8	1,825	...	600	1·16	...	...
Jhenida ...	,,	34 1/4	6 3/8	1,825	1,000	600	1·16	100	6
Gopalpur ...	,,	43 3/8	9 1/8	1,825	...	600	1·16	...	6
Magura ...	,,	51 1/2	8 1/8	2,490	2,000	600	2·5	200	...
JHENIDA-SULKOPA BRANCH.									
Battay ...	,,	39 3/8	5 1/8	1,825	...	600	1·16	...	6
Sulkopa ...	,,	44 1/2	5 1/8	1,825	1,000	600	2·5	100	...

EASTERN BENGAL STATE RAILWAY EXTENSION SURVEYS.

Kishenganj-Magura Line viâ *Khallispur, Durgapur and Jhenida, including Branch—Jhenida to Sulkopa.*

5′ 6″ Gauge.

Length ... ... 63·75 miles.

FORM R. VI. STAFF QUARTERS. SCHEME No. I.

NAME OF STATION.	Class.	Mileage.	Distance apart.	Station Master's quarters.		Assistant Station Master's, Signallers' or Clerks, quarters.		Menials' quarters.		Guards' or Drivers' quarters.		Permanent-way Inspector's or Sub-Permanent-way Inspector's quarters.		Permanent-way Gang-men's quarters.		Running room.	
				No.	S. ft.	No.	S. ft.	No.	S. ft.	No.	S. ft.	No.	S. ft.	No.	S. ft.	No.	S. ft.
Shibnibash (Kishenganj).	3rd	0		...	...	...	...	...	...	...	...	...	...	...	...	...	...
Jibannagar ...	,,	6½	6½	1	901	1	436	6	636	...	...	1	901	...	...	...	...
Khallispur ...	,,	15	8½	1	901	1	436	6	636	...	...	...	...	...	...	...	...
Kotchandpur ...	,,	19½	4½	1	901	2	872	8	636	...	...	1	1,166	...	...	...	...
Durgapur	,,	27½	8	1	901	1	436	10	1,060	...	...	...	...	*192	...	...	...
Jhenida	,,	34½	6½	1	901	1	436	6	636	...	...	1	901	...	...	...	...
Gopalpur	,,	43½	9½	1	901	1	436	6	636	...	...	...	...	...	...	...	...
Magura	,,	51½	8½	1	901	2	872	14	1,484	...	...	...	...	...	...	2	1,300
JHENIDA-SULKOPA BRANCH.																	
Battay	,,	39½	5½	1	901	1	436	6	636	...	...	...	...	...	...	...	...
Sulkopa	,,	44½	5½	1	901	2	872	14	1,484	...	...	...	...	...	...	...	...

* Along the line.

EASTERN BENGAL STATE RAILWAY EXTENSION SURVEYS.

Kishenganj-Magura Line viâ *Khallispur, Durgapur and Jhenida, including Branch—Jhenida to Sulkopa.*

5′ 6″ Gauge.

Length ... ... 63·75

FORM R VII. STATION MACHINERY. SCHEME No. I.

NAME OF STATION.	Station ash-pits.	WATER-COLUMNS.		PIPING.		WATER-TANK.	WELL.	Steam-pump.	Hand-pump or water-lift.	SWITCHES.			CROSSINGS.				Main signals.	Distant signals.	WEIGH-BRIDGE.		ENGINE-SHED.	Loco. ash-pits.	Engine turn-table.
		Number.	Diameter.	Length.	Diameter.	Capacity.	Diameter.			15 feet.	12 feet.	Total.	1 in 12.	1 in 9½.	1 in 6.	Total.			Number.	Capacity.	Area.		
	No.	No.	In.	Ft.	In.	C. ft.	Ft.	No.	No.	No.	No.	No.	No.	No.	No.	No.	No.	No.	No.	Tons.	S. ft.	No.	No.
Shibnibash	...	..	...	...	...	...	...	...	...	...	2	2	...	2	...	2	1	1	...	...	...	...	...
Jibannagar	...	...	...	...	...	...	...	...	...	2	1	3	2	1	...	3	2	2	...	...	...	...	...
Khallispur	...	...	...	...	...	...	...	...	...	2	1	3	2	1	...	3	2	2	...	...	...	...	...
Kotchandpur	...	...	...	...	...	...	...	...	...	2	2	4	2	2	...	4	2	2	...	...	...	...	...
Durgapur	2	2	8	1,275 / 150	8 / 9	1,024	12	...	1	2	1	3	2	1	...	3	2	2	...	...	...	...	...
Jhenida	...	...	...	...	...	...	...	...	...	2	2	4	2	2	...	4	2	2	...	...	...	...	...
Gopalpur	...	...	...	...	...	...	...	...	...	2	1	3	2	1	...	3	2	2	...	...	...	...	...
Magura	1	1	8	175 / 75	8 / 9	1,024	12	...	1	2	8	10	2	7	1	10	1	1	...	...	1,250	1	1*
Jhenida-Sulkopa Branch.																							
Battay	...	...	...	...	...	...	...	...	...	2	1	3	2	1	...	3	2	2	...	...	...	...	...
Sulkopa	1	1	8	175 / 75	8 / 9	1,024	12	...	1	2	8	10	2	7	1	10	1	1	...	...	1,250	1	...

* Triang'e.

EASTERN BENGAL STATE RAILWAY EXTENSION SURVEYS.

Kishenganj (Shibnibash) Magura Line.

5′ 6″ Gauge.

	Miles.
Vid Khallispur and Kaliganj direct	48
Branch—Kaliganj to Sulkopa	19·75
TOTAL LENGTH ...	67·75

FORM E. I. ABSTRACT OF COST OF RAILWAY. SCHEME No. II.

HEADS OF ACCOUNT.	TOTAL COST IN RUPEES.			
	SUB-HEADS.		MAIN-HEADS.	
	Total cost.	Rate per mile.	Total cost.	Rate per mile.
	Rs.	Rs.	Rs.	Rs.
I.—PRELIMINARY EXPENSES ...	...	...	40,650	600
(*a*) Survey expenses ...				
(*b*) Plant	40,650	600	...	...
(*c*) Establishment ...				
II.—LAND	4,06,500	6,000	4,06,500	6,000
III.—FORMATION	...	...	7,41,727	10,948
(*a*) Earthwork	7,41,727	10,948	...	...
(*b*) Tunnels	...	...	...	...
IV.—BRIDGEWORK	...	...	4,55,483	6,723
(*a*) Major bridges ...	2,28,656	3,375	...	...
(*b*) Minor bridges ...	2,26,827	3,348	...	...
V.—FENCING, &c.	...	...	2,69,171	3,973
(*a*) Fencing	2,42,816	3,584	...	...
(*b*) Road crossings ...	24,661	364	...	...
(*c*) Mile and gradient posts ...	1,694	25	...	...
VI.—ELECTRIC TELEGRAPH ...	...	...	...	...
VII.—BALLAST AND PERMANENT-WAY	...	...	26,51,938	39,143
(*a*) Ballast	6,75,061	9,964	...	...
(*b*) Permanent-way ...	19,76,877	29,179	...	...
VIII.—STATIONS AND BUILDINGS ...	..	...	4,78,722	7,066
(*a*) Stations and Offices ...	1,80,012	2,657	...	...
(*b*) Workshops, Store-buildings, &c.	...	...	...	...
(*c*) Staff quarters	1,20,053	1,772	...	...
(*d*) Station machinery ...	1,78,657	2,637	...	...
IX.—PLANT	...	...	67,750	1,000
(*a*) Engineering	10,163	150	...	...
(*b*) Construction	33,875	500	...	...
(*c*) Locomotive	6,775	100	...	...
(*d*) Carriage and Wagon ...	3,387	50	...	...
(*e*) Station and office furniture	13,550	200	...	...
(*f*) Steamers or boats required for the general purposes of the Railway, but not for public traffic ...	...	...	...	...
X.—FERRIES, &c.	...	...	...	...
(*a*) Ferries	...	...	...	...
(*b*) Floating bridges ...	...	...	...	...
XI.—ROLLING STOCK	...	...	6,77,500	10,000
(*a*) Locomotive	2,94,712	4,350	...	...
(*b*) Carriage and Wagon ...	3,82,788	5,650	...	...
XII.—GENERAL CHARGES ...	...	...	2,15,106	3,175
(*a*) Direction or General ...	6,775	100	...	...
(*b*) Engineering	1,82,925	2,700	...	...
(*c*) Stores	11,856	175	...	...
(*d*) Audit and Account ...	6,775	100	...	...
(*e*) Medical and Sanitation ...	6,775	100	...	...
(*f*) Locomotive	...	...	...	...
(*g*) Traffic	...	...	...	...
TOTAL EXPENDITURE ...			Rs. 60,04,547	
Total rate per mile ...			,, 88,628	

	Rs.
English expenditure	13,28,000
Indian ditto	46,76,547

EASTERN BENGAL STATE RAILWAY EXTENSION SURVEYS.

Kishenganj-Magura Line via *Khallispur and Kaliganj, including Branch—Kaliganj to Sulkopa.*

5′ 6″ Gauge.

Length ... ... 67·75 miles.

FORM R. V. LIST OF STATIONS, STATIONS BUILDINGS, &c. SCHEME No. II.

NAME OF STATION.	Class.	Mileage.	Distance apart.	Station building.	Goods shed.	PASSENGER PLATFORM.		Goods platform.	Well diameter.
						Length.	Height above rails.		
			Miles.	S. ft.	S. ft.	S. ft.	S. ft.	Feet.	Feet.
Shibnibash (Kishenganj).	3rd	0		...	...	600	2·5	...	...
			6⅞						
Jibannagar ...	,,	6⅞		1,825	...	600	1·16	...	6
			8⅛						
Khallispur ..	,,	15		1,825	...	600	1·16	...	6
			4¼						
Kotchandpur .	,,	19¼		2,490	2,000	600	2·5	200	6
			9¼						
Kaliganj ...	,,	28½		1,825	1,000	600	1·16	100	...
			11						
Tekurea ...	,,	39½		1,825	...	600	1·16	...	6
			8¼						
Magura ...	,,	47¾		2,490	2,000	600	2·5	200	...
KALIGANJ-SULKOPA BRANCH.									
			8¾						
Jhenida ...	,,	37¼		1,825	1,000	600	1·16	100	6
			5½						
Battay ...	,,	42¾		1,825	...	600	1·16	...	6
			6¼						
Sulkopa ...	,,	48		1,825	2,000	600	2·5	200	...

EASTERN BENGAL STATE RAILWAY EXTENSION SURVEYS.

Kishenganj-Magura Line via *Khallispur and Kaliganj, including Branch—Kaliganj to Sulkopa.*

5′ 6″ Gauge.

Length ... ... 67·75.

FORM R. VI. STAFF QUARTERS. SCHEME No. II.

NAME OF STATION.	Class.	Mileage.	Distance apart.	Station Master's quarters.		Assistant Station Masters, Signallers' or clerks' quarters.		Menials' quarters.		Guards' or Drivers' quarters.		Permanent-way Inspector's & Sub-Permanent-way Inspector's quarters.		Permanent-way Gangmen's quarters.		Running room.	
				No.	S. ft.	No.	S. ft.	No.	S. ft.	No.	S. ft.	No.	S. ft.	No.	S. ft.	No.	S. ft.
Shibnibash (Kishenganj).	3rd	0		..	...	...	...	...	...	.	...	...	..	...	...	..	.
			6⅞														
Jibannagar	,,	6⅞		1	436	1	901	6	636	..	..	1	901	...	...	..	...
			8⅛														
Khallispur	,,	15		1	436	1	901	6	636	..	..	...	...	...	...	...	...
			4¼														
Kotchandpur	,,	19¼		9	872	1	901	6	636	.	...	...	...	*192	...	...	...
			9¼														
Kaliganj	,,	28½		1	436	1	901	10	1,060	4	2,332	1	1,166	...	...	...	...
			11														
Tekurea	,,	39½		1	436	1	901	6	636	...	..	1	901	...	...	...	...
			8¼														
Magura	,,	47¾		2	872	1	901	14	1,484	...	...	...	...	..	...	2	1,300
KALIGANJ-SULKOPA BRANCH.																	
			8¾														
Jhenida	,,	37¼		1	436	1	901	6	636	.	...	1	901	...	...	...	.
			5½														
Battay	,,	42¾		1	436	1	901	6	636	...	...	...	...	...	...	...	...
			6¼														
Sulkopa	,,	48		1	436	1	901	10	1,060	...	...	...	...	...	..	1	650

* Along line.

EASTERN BENGAL STATE RAILWAY EXTENSION SURVEYS.

Shibnibash (Krishengunj) Magura Line.

5' 6" Gauge.

	Miles.
Vid Khallispur, Kaliganj and Jhenida	55
Branch—Jhenida to Sulkopa	12
TOTAL LENGTH ...	67

FORM E. I. ABSTRACT OF COST OF RAILWAY. SCHEME NO. III.

HEADS OF ACCOUNT.	TOTAL COST IN RUPEES.			
	SUB-HEADS.		MAIN-HEADS.	
	Total cost.	Rate per mile.	Total cost.	Rate per mile.
	Rs.	Rs.	Rs.	Rs.
I.—PRELIMINARY EXPENSES ...	...	...	40,200	600
(*a*) Survey expenses ...				
(*b*) Plant	40,200	600	...	...
(*c*) Establishment ...				
II.—LAND	4,02,000	6,000	4,02,000	6,000
III.—FORMATION	...	...	7,33,516	10,498
(*a*) Earthwork	7,33,516	10,948	...	...
(*b*) Tunnels	...	...	...	...
IV.—BRIDGEWORK	...	...	4,50,441	6,723
(*a*) Major Bridges ...	2,26,125	3,375	...	...
(*b*) Minor „ ...	2,24,316	3,348	...	...
V.—FENCING, &c.	...	..	2,66,191	3,973
(*a*) Fencing	2,40,128	3,584	...	...
(*b*) Road crossings ...	24,388	364	...	...
(*c*) Mile and Gradient posts ...	1,675	25	...	...
VI.—ELECTRIC TELEGRAPH ...	...	...	..	...
VII.—BALLAST AND PERMANENT-WAY...		...	26,22 581	39,143
(*a*) Ballast	6,67,588	9,964	...	...
(*b*) Permanent-way .	19,54,993	29,179	...	...
VIII.—STATIONS AND BUILDINGS ...	...	...	4,73,422	7,066
(*a*) Stations and Offices ...	1,78,019	2,657	...	...
(*b*) Workshops, Store-buildings, &c.	...	...	...	...
(*c*) Staff quarters	1,18,724	1,772	..	...
(*d*) Station machinery ...	1,76,679	2,637	...	...
IX.—PLANT	...	...	67,000	1,000
(*a*) Engineering	10,050	150	...	...
(*b*) Construction	33,500	500	...	...
(*c*) Locomotive	6,700	100	...	...
(*d*) Carriage and Wagon ...	3,350	50	...	...
(*e*) Station and office furniture	13,400	200	...	...
(*f*) Steamers or boats required for the general purposes of the railway, but not for public traffic.	...	...	...	...
X.—FERRIES, &c.	...	...	...	...
(*a*) Ferries	...	...	...	...
(*b*) Floating bridges ...	...	...	...	...
XI.—ROLLING STOCK	...	...	6,70,000	10,000
(*a*) Locomotive	2,91,450	4,350	...	...
(*b*) Carriage and Wagon ...	3,78,550	5,650	...	...
XII.—GENERAL CHARGES ...	...	...	2,12,725	3,175
(*a*) Direction or General ...	6,700	100	...	...
(*b*) Engineering	1,80,900	2,700	...	...
(*c*) Stores	11,725	175	.	...
(*d*) Audit and Account ...	6,700	100	...	...
(*e*) Medical and Sanitation ...	6,700	100	...	...
(*f*) Locomotive	.	...	...	...
(*g*) Traffic	...	...	...	...
TOTAL EXPENDITURE ...			59,38,076	
Total rate per mile ...			88,628	

English expenditure ... ... Rs. 13,14,000
Indian „ ... ... „ 46,24,076

EASTERN BENGAL STATE RAILWAY EXTENSION SURVEYS.

Kishenganj-Magura Line viâ Khallispur, Kaliganj and Jhenida, including Branch—Jhenida to Sulkopa.

5' 6" Gauge.

Length ... . 67·00 miles.

FORM R. V. LIST OF STATIONS, STATION BUILDINGS, &c. SCHEME No. III.

NAME OF STATION.	Class.	Mileage.	Distance apart.	Station building.	Goods shed.	PASSENGER PLATFORM. Length.	PASSENGER PLATFORM. Height above rails.	Goods platform.	Diameter. Well.
			Miles.	S. ft.	S. ft.	Ft.	Ft.	Ft.	Ft.
Shibnibash (Kishenganj).	3rd	0		...	...	600	2·5	...	...
Jibannagar ...	,,	6⅞	6⅞	1,825	...	600	1 16	...	6
Khallispur ...	,,	15	8⅛	1,825	...	600	1·16	...	6
Kotchandpur ...	,,	19¼	4⅞	2,490	2,000	600	2·5	200	6
Kaliganj ...	,,	28½	8⅝	1,825	...	600	1·16	...	...
Jhenida ...	,,	37¼	8¾	1,825	1,000	600	1 16	100	6
Gopalpur ...	,,	47	9¾	1,825	...	600	1·16	...	6
Magura ...	,,	54¾	7¾	2,490	2,000	600	2 5	200	...
JHENIDA-SULKOPA BRANCH.									
Battay ...	,,	42¾	5½	1,825	...	600	1·16	...	6
Sulkopa ...	,,	48	5¼	1,825	1,000	600	2 5	100	...

EASTERN BENGAL STATE RAILWAY EXTENSION SURVEYS.

Kishenganj-Magura Line viâ Khallispur, Kaliganj and Jhenida, including Branch—Jhenida to Sulkopa.

5' 6" Gauge

Length ... ... 67·00 miles.

FORM R. VI. STAFF QUARTERS. SCHEME No. III.

NAME OF STATION.	Class.	Mileage.	Distance apart.	Station Master's quarters.		Assistant Station Master's, Signallers' or Clerks' quarters.		Menials' quarters.		Guards or Drivers' quarters.		Permanent-way Inspector's or Sub-Permanent-way Inspector's quarters.		Permanent-way Gangmens' quarters.		Running room.	
				No.	S. ft.	No.	S. ft.	No.	S. ft.	No.	S. ft.	No.	S. ft.	No.		No.	S. ft.
Shibnibash (Kishenganj).	3rd	0		..	...	...	...	...	...	...	.	...	.	...	...	...	.
Jibannagar	,,	6¾	6¾	1	436	1	901	6	636	...	..	1	901	...	...	...	...
Khallispur	,,	15	8¼	1	436	1	901	6	636		...		...	192*	...	..	...
Kotchandpur ...	,,	19¼	4¼	2	872	1	901	6	636	..		...			.	...	...
Kaliganj ...	,,	28½	9¼	1	436	1	901	10	1,060	...	...	1	1,166	..	...	...	..
Jhenida ...	,,	37½	8¾	1	436	1	901	6	636		.	1	901	...	...	...	
Gopalpur ..	,,	47	9½	1	436	1	901	6	636	...	..	1	901	...	...	...	...
Magura	,,	54¾	7¾	2	872	1	901	14	1,484		...	...	...	...	..	2	1,900
JHENIDA-SULKOPA BRANCH.																	
Battay .	,,	42¾	5½	1	436	1	901	6	636	...	..	.	..	...			.
Sulkopa ...	,,	48	5¼	1	436	1	901	10	1,060	4	2,332		...	...	...	1	650

*Along line.

APPENDIX.

Schedule of Rates current in Circular and Eastern Canals Division—Jessore.

PARTICULARS.	Rate.				PARTICULARS.	Rate.			
	Rs.	A.	P.	Per		Rs.	A.	P.	Per
Earthwork in 3 ft. bank ...	3 0 0 to 6 4 0			1,000 c. ft.	Cement plaster, being 1 part of cement and 2 parts of sand.	5	6	0	100 s ft.
Ditto for additional 3 ft. in height.	0	4	0	1,000 „	Colourwashing, 2 coats ...	0	4	3	100 „
Ditto lead over 600 ft.	0	8	0	1,000 „ for every chain.	Brick-on-edge flooring over 1 brick flat.	24	11	0	100 „
Turfing and dressing ...	1	4	0	100 s. ft.	Terrace flooring, 4" beaten to 3".	25	12	0	100 „
Concrete	29	13	0	100 c. ft.	Painting, 1 to 3 coats ...	1 8 0 to 3 8 0			100 „
Brickwork	30 0 0 to 32 9 0			100 „	Varnishing woodwork, 1 coat	1	12	0	100 „
Cement pointing ...	4	8	0	100 s. ft.	Ditto ditto 2 coats	2	3	0	100 „
Woodwork, teak ...	4	4	0	C. ft.	Oiling doors	0	6	0	100 „
Petty ironwork, cast ...	12 0 0 to 14 0 0			Cwt.	Oiling windows ..	0	6	0	100 „
Ditto, wrought ...	22 0 0 to 25 0 0			Cwt.	Putting up doors ...	0	1	0	S. ft.
Coal-tarring, 2 coats ...	1	3	0	100 s. ft.	Putting up windows ...	0	1	0	S. ft.
Whitewashing, 3 coats ...	0	5	0	100 „	9" thatching, including bamboo frame.	11	0	0	100 s ft.
Doors	1	4	6	S. ft.	3" . ditto, ditto ...	6	0	0	100 „
Brick ballast	8	3	0	100 c. ft.	Wattle and daub ...	2 0 0 to 3 0 0			100 „
Jhama ballast ...	10	0	0	100 „	Jaffrey work, bamboo ...	0 8 0 to 0 11 0			100 „
Pucca plaster (lime and surki).	3	9	0	100 s. ft.	Double mat walling ...	1 8 0 to 3 0 0			100 „
Pucca plaster (lime and sand).	3	4	0	100 „	Nuri tiled roofing in bamboo, frame cane tied.	14	13	0	100 „
Kutcha plaster (mud plaster).	0	13	0	100 „	Road metalling, spreading and consolidating.	2	14	0	100 c. ft.
Pucca plaster, cement ...	3	2	0	100 „	Spreading ballast ...	0	4	0	100 „
Cement plaster in floor ½" thick, being 1 part of cement and 1 part of sand	6	15	0	100 „	Ballast breaking ...	1	4	0	100 „
					Surki, 1st class ...	15	0	0	100 „

No. 283D.G.R., dated Calcutta, the 11th March 1902.

From—J. H. REAKS, Esq., Assistant Traffic Superintendent,
To—The Traffic Superintendent, Eastern Bengal State Railway, Calcutta.

I HAVE the honour to inform you that, acting under instructions received from you, I left Calcutta by train on the night of the 10th December 1901 for the purpose of conducting enquiries in the Jessore district respecting trade statistics, prospective traffic, etc., in connection with the proposed branch railway from Shibnibash to Magura.

I visited the principal trade centres in the aforementioned district and obtained information relative to the probable amount of traffic which would be secured, in the event of railway communication being established, between Shibnibash and these centres of trade.

Trade Centres.—The following are the chief centres of trade in the district:—

Kotchandpur.	Jhenida.
Kaliganj.	Magura.
Sulkopa.	

The trade of each of these centres is almost, but not entirely, independent of the trade of any of the others. In support of the foregoing statement, witness the following instance. A small portion of the import trade of Kaliganj is with Kotchandpur, and large quantities of jaggree are also sent from Kaliganj to Kotchandpur, to be manufactured into sugar, at the latter place. I may mention here that, in the statistics of trade which I am furnishing for each of these centres, due allowance has been made for this fact.

In the course of my tour, I made it a point of visiting and interviewing the principal zamindars and civil officers in the district, in order to obtain information bearing on points of value in connection with the project. I feel it my duty to acknowledge my indebtedness to these gentlemen for the help extended to me.

Before proceeding to furnish detailed information regarding the export and import trade of each of these centres, it might be as well to give a general idea of the character, products, and communications of the whole district under consideration.

Character and Products.—The country situated between Kotchandpur and Shibnibash hardly merits mention. At the time of my visit, only a very small portion was under cultivation. Jute is grown, to a small extent, in the immediate vicinity of Shibnibash; seeds and grain being the chief products as Kotchandpur is approached. A marked improvement, however, is noticeable in the nature of the produce of that portion of the district lying within the trangular area, formed by the points, Kotchandpur, Kaliganj and Jhenida, but I was particularly impressed with that section of the country enclosed between the roads running from Jhenida to Magura and Sulkopa, respectively. Mr. T. C. Tweedie, of Porahattee, an estate 3 miles distant from Jhenida, is the zamindar of the larger part of this area. I interviewed Mr. Tweedie, who informed me that the soil was exceedingly rich, and without the help of manure yields at least two crops yearly. He stated that land in this locality had been sold for as much as Rs. 150 per bigha, and that he himself had obtained a rent of Rs. 52 per bigha for land required for raising brinjal crops. A great portion of this land has, until very lately, been under indigo cultivation, but this industry has gradually declined, and the land is now being utilised for the production of jute. In addition to jute, the principal products of this area are seeds, especially linseed and mustard seed, and grain of all descriptions. Mr. Tweedie further informed me that the tract of country situated to the south of the Jhenida-Magura road was almost entirely inundated during the rains, and that the only product was coarse rice, of which the local consumption was greater than the output.

Communications.—The country is intersected by rivers, in consequence of which the bulk of the traffic in these parts is conducted by boats, this being especially the case in the eastern part of the district. The principal rivers are—

Cobaduk.	Kumar.
Chitra.	Gorai.
Nobogunga.	

These rivers are all navigable for country boats to a greater or less extent throughout the year, but trouble has been experienced during the last year or two with regard to the navigation of the Nobogunga, owing to the silting up of the Mocheekhalee khal, which connects the Nobogunga with the Gora.

As means of transport by water are at hand everywhere, very little attention has hitherto been paid to land communication, the only roads in the district being those which connect the following places with one another, viz.—

Shibnibash to Kaliganj *viâ* Kotchandpur, length 28 miles.
Jessore to Jhenida *viâ* Kaliganj, length 28 miles.
Jhenida to Chuadanga, length 22 miles.
Jhenida to Magura, length 17 miles.
Jhenida to Sulkopa, length 12 miles.

Carting charges throughout the district are very high.

I left Shibnibash for Kotchandpur on the morning of the 11th December 1901, passing on my way through the villages of Dowlatganj and Khallispur. The village of Moheshpur, which is a few miles off the main road, I visited on my return journey. So

far as prospective traffic is concerned, none of these villages is of much importance. Dowlatganj possesses a police thana, but is entirely destitute of trade. Of the two villages, Khallispur and Moheshpur, the former is of far greater importance, as, although the population of Moheshpur, owing to its being the head-quarters of certain zamindars of the district, exceeds that of Khallispur, the trade afforded by the latter is in excess of the trade of the other place. In view of the foregoing, I am of opinion that no advantage will be secured by running the line through Moheshpur instead of Khallispur, as has been suggested; in fact, I feel confident that loss of traffic, to say nothing of increased expenditure, will ultimately result if such a course were to be adopted.

Kotchandpur.—This large town, situated on the Cobaduk river, is distant about 20 miles from Shibnibash, and is the seat of a considerable export and import trade. The chief industry here is the manufacture of sugar, which is obtained from the date palms growing in the surrounding country. Molasses, grain, seeds, and turmeric form the remaining articles exported from this place. The chief imports are salt, lime, coal, gunnies, piece-goods, mustard, castor and kerosine oil, iron, seeds, tobacco and potatoes.

Khotchandpur is connected with the Eastern Bengal State Railway by road with the Bengal Central Railway at Jhikergachi by river, and has river communication with Calcutta and the eastern districts of Bengal.

The trade of the town is chiefly with Calcutta and Narainganj, molasses being despatched in very large quantities to the latter place. The whole of this traffic is conducted by country boats. The rate is 4 annas per maund.

As you are fully aware, a great portion of the trade with Calcutta, which was formerly conveyed by the Eastern Bengal State Railway—being carted between Shibnibash and the Kotchandpur out-agency—has, owing to the establishment at Kotchandpur by the Bengal Central Railway of a steamer agency, whose rates are cheaper, been diverted to that line *viâ* Jhinkergachi. From the records of the Eastern Bengal State Railway out-agency at Kotchandpur, I found that the exports *viâ* Shibnibash, for the year 1901 were 1,176 *tons less* than the exports of the preceding year.

There is no doubt that, were railway communication established, the whole of the export and import trade of the town, with the exception of molasses, would be secured, as cheaper and more rapid means of transport would be afforded. It is doubtful whether the railway would secure any of the molasses traffic. Mr. E. G. MacLeod, the largest merchant in Kotchandpur, is of opinion that it would not, as molasses is sent in large earthen jars, each weighing between 2 and 3 maunds, and the traders fear damage and loss, in the course of transit and handling, in the event of despatch by rail; moreover, the rate by country boat is very low.

Kaliganj.—I stayed a day at Kaliganj on my return journey from Magura. I had previously written to the Manager of the estate of the Raja of Nuldanga, to whom the land in this quarter belongs, stating that I was making enquiries in this district, and should be glad of any information he could give me, and appointed a date for meeting him at Nuldanga. He was unfortunately away at the time, and was consequently unable to meet me. The information I gathered regarding this place was given me by the traders. Kaliganj is situated on the Chitra river, about 8 miles east of Kotchandpur, and is connected with the latter place by a good metalled road. The road from Jessore to Jhenida passes through Kaliganj; the distance to Jessore is 18 miles and to Jhenida 10 miles. This is also a metalled road in good order. A kutcha road from Chooadanga also terminates at Kaliganj. There are a number of large villages along this road, the trade of which centres on Kaliganj. It will thus be seen that the town occupies an important situation.

Like Kotchandpur, it is indebted to its commerce in sugar for its prominence. Though not actually a manufacturing centre, it is a large distributing nucleus for the sugar manufactories in the adjacent country. Most of these manufactories are situated on the banks of the Chitra river below Kaliganj.

The chief exports are gur, mustard seed, linseed and grain. Kerosine oil, mustard oil, castor oil, salt, and rice form the principal imports.

The trade of this village is chiefly with Calcutta.—A small portion of the imports is obtained from Kotchandpur. Gúr, as has been already stated, is distributed to the manufacturing centres in the vicinity A great portion of the export and import trade flows along the road between Kaliganj and Jessore, whence railway communication to Calcutta is available. Kerosine oil, salt and rice—the latter from Barisal—is conveyed *by boats from Calcutta.* The sugar and molasses obtained from the gúr, distributed by Kaliganj to the manufacturing centres on the banks of the Chitra river, are also conveyed *by boats to Calcutta* and Narainganj respectively.

A railway line running through Kaliganj would *not* be likely to secure this traffic, but it may be confidently assumed that all the traffic now carried on by means of the *Jessore road* and a large portion of the trade *viâ* the Chitra river would be carried by rail, as, in addition to the saving of time, the traffic now carried by road could be railed at very much cheaper rates, while rates not much in excess of those now charged by boats could be quoted in the case of traffic now going by river. As regards existing charges, I beg to refer you to the schedule of rates appended to this report.

Jhenida.—Jhenida, situated on the Nobogunga river, is the head-quarters of a subdivision. It is the centre of a large and exceedingly fertile district, and is connected by roads with Chooadanga, Kaliganj, Sulkopa and Magura, the distance to Chooadanga, which is the

nearest railway station, being 22 miles. The Nobogunga is only navigable by small country boats for a few months in the year. Owing to this fact, and to its great distance from the nearest railway station by road, involving heavy carting charges for transport, the trade of the place has been naturally restricted. I have no doubt that, were railway communication established, there would be a marked development in the trade.

The chief exports are gúr, mustard seed, linseed and grain; the chief imports kerosine oil, salt, mustard oil, castor oil and piece-goods. Almost the entire trade is conducted by carts between this village and Chooadanga. A certain amount of gúr is sent by carts to Alamdanga, Eastern Bengal State Railway.

Magura.—I left Jhenida on the morning of the 15th December, and reached Magura early on the same day after traversing 17 miles of kutcha road. Magura is also the head-quarters of a subdivision, and is situated just below the junction of the Nobogunga and Kumar rivers. The only communication by land are the roads to Jhenida and Jessore and a road 6 miles in length to Benodepur on the Nobogunga river. The town, or rather the *village of Magura, is practically the trade centre of the whole subdivision.* The exports consist of grain and pulses, jute, linseed, mustard seed, gúr and oilcakes. The chief imports are paddy, salt, mustard oil, kerosine oil, piece-goods, cotton twist and tobacco. *The entire trade is carried on by boats on the Nobogunga river.* With the exception of rice, which is imported from *Barisal*, the remainder of the trade is with Calcutta.

A service of steamers runs, on alternate days, between Khulna and Benodepur.

During the rainy season, this place is cut off from direct communication by land with the western parts of the district, as the roads, being kutcha, are rendered impossible to all descriptions of traffic. The inhabitants suffer much inconvenience in consequence. In order to travel westward, they have first to travel by boat as far south as Khulna and take the rail from that place.

There are some traders in jute at Magura.

Boat competition is sure to be very severe, should an alternative route by railway be afforded the town. Saving of time will, of course, be in favour of the railway. The journey by boat to Calcutta occupies about two weeks. The traders express willingness to despatch their goods by rail.

Sulkopa.—After completing my enquiries at Magura, I proceeded to Sulkopa by way of Jhenida, there being no road of any description between Magura and the former place. It is on the left bank of the Kumar river, about 12 miles distant from Jhenida. It is the seat of a fairly large export and import trade. The chief exports are jute, linseed, grain, gúr, mustard seed, tamarind and onions, the imports being salt, kerosine oil, cloth, iron, cotton twist, sugar, mustard oil, timber, coal, betelnuts and rice. *It is the trade centre of a large area lying on both banks of the Kumar river.*

During the rainy season communication by water with Kushtea and Kumarkhally is possible, and cloth, iron and timber are obtained by these routes. The remainder of the import and export trade is with Calcutta by the Nobogunga river. A certain amount, however, is carried by boat as far as Singia and Nawapara stations on the Bengal Central Railway and railed thence to Calcutta. This fact led me to think that, if railway communication were opened to Magura, the greater portion, at any rate, of the Sulkopa trade would take the rail at that point. If this could be attained, it would obviate the necessity of running a branch line to Sulkopa. In my opinion with the severe competition with boats for the trade of the centres on the Nobogunga river, which may be expected, *it will not be profitable at first*, at any rate, *to have two lines with hardly a distance of 20 miles between their terminal points running to the river.* The traders inform me that, unless the railway ran direct to Sulkopa, they would continue to despatch their goods by boats to Calcutta, as they are now doing; but as they are naturally desirous of having railway communication as near at hand as possible, I do not attach much importance to their statement.

Between Sulkopa and Magura, lying on the banks of the Kumar river are a few villages which carry on an independent trade, *wholly in jute, with Calcutta by country boat.* The most important are Abaipur, about midway between Sulkopa and Magura and Barasat at no great distance from Magura. From the estimates furnished me from various sources I should place *the whole of the jute trade from this country at about 8,00,000 maunds yearly.* From Baraset alone, Mr. Tweedie informed me more than 1,00,000 maunds was despatched last year. Abaipur despatches a great deal more than this amount.

Conclusions.—From what has been stated in the foregoing paragraphs, I think the following points will be apparent:—

(1) That, in regard to the trade of Magura and Sulkopa, competition with country boats will be very keen

(2) That, so far as the other trade centres are concerned, little fear need be entertained of the result of competition with country boats.

(3) That the trade of both Kaliganj and Jhenida, specially that of the latter place, are likely to develop greatly in the event of railway communication through these centres being established.

(4) That Kaliganj being a large trading centre should be made an obligatory point.

Proposals.—In order, therefore, to secure the greatest amount of traffic, I am of opinion that the most advantageous route would be *viâ Khallispur, Kaliganj and Jhenida*, and that the construction of the branch to Sulkopa should be postponed, until the competition by boats

at Magura has been reduced, and it has been seen what route the traffic on the Kumar river north of Magura takes. The difference in length between this route and the route to Magura direct *vid* Kaliganj is 7 miles; but in the event of the latter route being selected, and should it be subsequently considered desirable to construct a branch line to Sulkopa, rail connection between Jhenida and Kaliganj would be necessary. The total length of the whole line, including the branch, would then be the same.

Again, the line between Jhenida and Magura would traverse a more fertile tract of country than that traversed by the line between Kaliganj and Magura, and would consequently pay better.

I am unable to say to what extent the line will be used by passengers, as I had no means of obtaining figures on this point. As *the country traversed is thickly populated*, and the line passes through the head quarters of two of the subdivisions, it may be confidently assumed that the local passenger traffic will be heavy.

A statement of the trade statistics of each of the centres and a schedule of rates charged by boat and cart are appended. As regards the former, the figures were furnished me by the traders of the place, and I have reason to believe that they are approximately correct, as in the instance of Kotchandpur I submitted the estimates to Mr. MacLeod, who informed me that they were approximately true.

SCHEDULE OF RATES.

Rate by cart per maund.

From		To		Rate.
Shibnibash	...	Kotchandpur	...	2 annas 3 pie.
Kaliganj	...	Jessore	...	2 ,, 3 ,,
Jhenida	...	Chooadanga	...	2 ,, 3 ,,
Ditto	...	Magura	...	4 ,,
Ditto	...	Sulkopa	...	2 ,,
Ditto	...	Kaliganj	...	2 ,,
Kotchandpur	...	Ditto	...	1 anna 6 pie.

Rate by boat.

Kotchandpur	..	Jhikergachi	...	1 anna per maund.
Ditto	...	Narainganj	...	4 annas per maund.
Sulkopa	...	Calcutta	...	From 25 to 30 rupees per boat of 100 maunds from January to August and 30 to 35 rupees from August to January.
Magura	...	Ditto	...	From 20 to 25 rupees per boat of 100 maunds.
Kaliganj	...	Ditto	...	From 12 to 16 rupees per boat of 100 maunds.
Ditto	...	Naraingunge	...	From 20 to 25 rupees per boat of 100 maunds.

TRADE STATISTICS.

NAMES OF ARTICLES.	KOTCHANDPUR.		KALIGANJ.		JHENIDA.		MAGURA.		SULKOPA.	
	Imports	Exports.	Imports.	Exports.	Imports.	Exports.	Imports	Exports	Imports.	Exports.
	Mds.	Mds.	Mds.	Mds	Mds.	Mds.	Mds.	Mds.	Mds.	Mds.
Coal	1,30 000									
Cotton, including piece-goods and twist.	15,200	..	8,500	.	2,000	. .. ..	15,600 9,500	... .	18,300 7,400	....
Gram and pulses	.	34,000		6,000		3,400		23,700	..	25,600
Gunnies	2,600					..				
Jute	..	... .	.	.				50,600		1,70,000
Lime	20,400	..						..		.....
Metals, including iron ...	5,200	.. .	..		..		4,800		4,600	. .
Oils, including kerosine ...	21,300	..	12,400		4,700		17,800		12,400	.....
Rice and paddy	..	.	40,000		5,000		35,000	.		. .
Salt	20,300		18,600		2,800		25,800		14,000	
Oilseeds		12,000		6,400		3,000		25,700		8,200
Sugar	...	1,00,000	,				..			
Jaggree				2,30,000		8,600		14,400		15,600
Molasses		2,50,000								
Tobacco	5,000		2,000		1,500		3,800		2,100	
Potatoes	25,000						..		..	
Miscellaneous	5,800	7,200	3,100		2,300		6,200	12,000	3,700	4,200

The 2nd September 1902.

No. 177R —Declaration.—Whereas it appears to the Lieutenant-Governor of Bengal that land is required to be taken by Government at the public expense for a public purpose, viz., for Indrabil station yard on the Midnapore-Jherria extension of the Bengal-Nagpur Railway, in the villages of Mehalkooka, Pathareyagoda, Gopalpur, Saldeeha, Enderbir, pargana Barpara, zilla Manbhum, it is hereby declared that for the above purpose a piece of land measuring, more or less, 12 acres 2 roods 24¼ poles, being equivalent to 38 bighas 5 cottahs 6 71 chitaks of standard measurement, is required within the aforesaid villages.

This declaration is made, under the provisions of section 6 of Act I of 1894, to all whom it may concern.

A plan of the land may be seen in the office of the District Engineer, Adra District, Bengal-Nagpur Railway, at Adra.

No. 179R.—Declaration.—Whereas it appears to the Lieutenant-Governor of Bengal that land is required to be taken by Government at the public expense for a public purpose, viz , for Midnapore-Jherria extension of the Bengal-Nagpur Railway, in the village of Patanpur Chatua, zilla Bankura, it is hereby declared that for the above purpose a piece of land measuring, more or less, 20 acres 3 roods 10 poles, being equivalent to 62 bighas 19 cottahs 4¾ chitaks of standard measurement, is required within the aforesaid village of Patanpur Chatua.

Mines of coal, iron-stone, slate or other minerals lying under the land, except only such parts of the mines or minerals as it may be necessary to dig or carry away or use in the construction of the works for the purpose of which the land is being acquired, are not needed.

This declaration is made, under the provisions of section 6 of Act I of 1894, and section 3, clause (1) of Act XVIII of 1885, to all whom it may concern.

A plan of the land may be seen in the office of the District Engineer, Adra District, Bengal-Nagpur Railway, at Adra.

No. 180R.—Declaration.—Whereas it appears to the Lieutenant-Governor of Bengal that land is required to be taken by Government at the public expense for a public purpose, viz., for Midnapore-Jherria extension of the Bengal-Nagpur Railway, in the village of Murara, zilla Bankura, it is hereby declared that for the above purpose a piece of land measuring, more or less, 2 acres 1 rood 7¼ poles, being equivalent to 6 bighas 18 cottahs 14¼ chitaks of standard measurement, is required within the aforesaid village of Murara

Mines of coal, iron-stone, slate or other minerals lying under the land, except only such parts of the mines or minerals as it may be necessary to dig or carry away or use in the construction of the works for the purpose of which the land is being acquired, are not needed.

This declaration is made, under the provisions of section 6 of Act I of 1894, and section 3, clause (1) of Act XVIII of 1885, to all whom it may concern.

A plan of the land may be seen in the office of the District Engineer, Adra District, Bengal-Nagpur Railway, at Adra.

No. 181R.—Declaration.—Whereas it appears to the Lieutenant-Governor of Bengal that land is required to be taken by Government at the public expense for a public purpose, viz., for Midnapore-Jherria extension of the Bengal-Nagpur Railway, in the village of Jhantapahari, zilla Bankura, it is hereby declared that for the above purpose a piece of land measuring, more or less, 16 acres 32 poles, being equivalent to 49 bighas 3 chitaks of standard measurement, is required within the aforesaid village of Jhantapahari.

Mines of coal, iron-stone, slate or other minerals lying under the land, except only such parts of the mines or minerals as it may be necessary to dig or carry away or use in the construction of the works for the purpose of which the land is being acquired, are not needed.

This declaration is made, under the provisions of section 6 of Act I of 1894, and section 3, clause (1) of Act XVIII of 1885, to all whom it may concern.

A plan of the land may be seen in the office of the District Engineer, Adra District, Bengal-Nagpur Railway, at Adra.

W. A. INGLIS,
Offg. Secy. to the Govt. of Bengal.

MARINE DEPARTMENT.

The 28th August 1902.

No. 114Marine.—Mr. I. A. B. Mackinnon, Senior Master Pilot, is appointed to act as a Branch Pilot, *vice* Mr. R. A. Hopkins, or until further orders, with effect from the date he is put on the running list.

D. B. HORN,
Secy. to the Govt. of Bengal.

The 29th August 1902.

No. 115 Marine.—The following notification No. 1953, dated the 22nd August 1902, by the Government of India, relative to the imposition of quarantine on arrivals from Yamo, is republished for general information.

D. B. HORN,
Secy. to the Govt. of Bengal.

No. 1953, dated Simla, the 22nd August 1902.

NOTIFICATION—By the Government of India, Home Department.

The following telegram is published for general information:—

Telegram dated Therapia, the 16th August 1902.

From—His Britannic Majesty's Ambassador Extraordinary and Plenipotentiary at Constantinople,

To—His Excellency the Viceroy.

Ten days' quarantine on arrivals from Yambo.

The 1st September 1902.

No. 116 Marine.—Mr. W. H. Ridler, Junior Master Pilot, is granted, under Articles 264A and 743 of the Civil Service Regulations, combined leave for one year, of which the first three days will be treated as privilege leave, with effect from the 8th August 1902.

D. B. HORN,
Secy. to the Govt. of Bengal.

The 2nd September 1902.

No. 117 Marine.—The following Notification No. 1711 $\frac{\text{Sanitary}}{\text{Plague}}$, dated the 18th July 1902, issued by the Government of India, is republished for general information.

D. B. HORN,
Secy. to the Govt. of Bengal.

No. 1711 $\frac{\text{Sanitary}}{\text{Plague}}$, dated Simla, the 18th July 1902.

NOTIFICATION—By the Government of India, Home Department.

THE Home Department Notification No. 486, dated the 28th February 1901, prohibiting, under section 2, sub-section (1) of the Epidemic Diseases Act, 1897 (III of 1897), the bringing, taking, sending or consigning of soiled linen and used bedding (except when carried as the personal baggage of travellers), rags and waste paper into or through any other part of India to which the provisions of the said Act extend or have been applied, from certain specified plague-infected areas, is cancelled so far as the Marwar State in Rajputana is concerned.

The 2nd September 1902.

No. 118 Marine.—The following Notification No. 1887 $\frac{\text{Sanitary}}{\text{Plague}}$, dated the 7th August 1902, issued by the Government of India, is republished for general information.

D. B. HORN,
Secy. to the Govt. of Bengal.

No. 1887 $\frac{\text{Sanitary}}{\text{Plague}}$, dated Simla, the 7th August 1902.

NOTIFICATION—By the Government of India, Home Department.

THE notification of the Government of India in the Home Department, No. 2021, dated the 1st November 1901, prohibiting, under section 2, sub-section (1) of the Epidemic Diseases Act, 1897 (III of 1897), the bringing, taking, sending, or consigning of soiled linen and used bedding (except when carried as the personal baggage of travellers), rags and waste, paper from certain districts into or through any other part of India to which the provisions of the said Act extend or have been applied, is cancelled so far as it affects the bringing, taking, sending, or consigning of waste paper from the Allahabad district.

The 2nd September 1902.

No. 119 Marine.—It is hereby notified for general information that the port of Mandvi is declared free from plague, and that the regulations for the prevention of the introduction of plague by sea, which were imposed in the ports of Orissa and in the port of Chittagong against vessels arriving from that port, are hereby withdrawn.

D. B. HORN,
Secy. to the Govt. of Bengal.

The 2nd September 1902.

No. 120Marine.—Mr. E. W. J. Bartlett, Acting Branch Pilot, is granted privilege leave under Article 746 (*a*) of the Civil Service Regulations, from the 3rd August to the 4th September 1902.

D. B. HORN,
Secy. to the Govt. of Bengal.

The 2nd September 1902.

No. 121Marine.—In accordance with the provisions of section 50 of the Indian Ports Act, 1889, the following account of the receipts and charges of the Hospital Port Dues Fund, Chittagong, for the year 1901-1902 is published for general information. It forms a supplement to the abstract account of the receipts and charges of the Chittagong Port Fund for the year 1901-1902, published in page 643, Part I of the *Calcutta Gazette* of the 14th May 1902.

D. B. HORN,
Secy. to the Govt. of Bengal.

RECEIPTS.	Amount.	Total.	EXPENDITURE.	Amount.	Total.
	Rs. A. P.	Rs. A. P.		Rs. A. P.	Rs. A. P.
Balance on the 1st April 1901 ...	.....	2,247 15 6	Pay of Health Officer	2,325 0 0	
Hospital Port Dues collection ...	8,310 15 0		Pay of Health Officer's boat establishment.	661 13 4	
Miscellaneous ...	12 8 0		Contingencies	68 6 5	
		8,323 7 0	Servant	108 0 0	
			Contribution towards the repayment of loan.	2,309 15 6	
			Contribution towards the maintenance of the General Hospital.	1,930 0 0	
			Refund	10 11 0	
			Percentage on Treasury Establishment.	38 15 8	
					7,415 0 7
			Total ...	.....	7,462 13 11
			Balance on the 31st March 1902 ...	...	3,118 8 7
GRAND TOTAL ...	.....	10,571 6 6	GRAND TOTAL ...	...	10,571 6 6

SUBORDINATE CIVIL SERVICE.

No. 4062A.

No. 2283A.D.—The 1st September 1902.—Maulvi Mohammed Faizullah Khan, Sub-Deputy Collector, Bhagalpur Division, is posted temporarily to the Araria subdivision of the Purnea district.

Purnea.

No. 2312A.D.—The 1st September 1902.—Mr. J. W. Engelbregt, Sub-Deputy Collector, is allowed leave for six months, under article 369 of the Civil Service Regulations, in extension of the leave granted to him under the order of the 8th April 1902.

C. E. BUCKLAND,
Chief Secy. to the Govt. of Bengal.

REGISTRATION DEPARTMENT.

No. 2271A.D.—The 29th August 1902.—Sahibzada Mohamed Karim Shah is appointed to be Rural Sub-Registrar of Sealdah, in the district of the 24-Parganas.

24-Parganas.

C. E. BUCKLAND,
Chief Secy. to the Govt. of Bengal.

JAIL DEPARTMENT.

No. 10337, dated Calcutta, the 1st September 1902.—Captain C. J. Robertson Milne, I.M.S., made over charge of the Barisal Jail to Lieutenant-Colonel R. Cobb, I.M.S., on the afternoon of the 22nd August 1902.

No. 10338, dated Calcutta, the 1st September 1902.—Mr. M. S. Emerson made over charge of the Alipore Central Jail to Mr. G. A. Davis on the afternoon of the 27th August 1902.

JOHN MULVANY, CAPTAIN, I.M.S.,
Depy. Inspr.-Genl. of Jails, Bengal.

CIVIL MEDICAL DEPARTMENT, BENGAL.

No. 2383D, dated the 27th August 1902.—Assistant Surgeon Hari Pada Mukerjee, of the Madaripur Subdivision and Dispensary, in the Faridpur district, is appointed to the Jamui Subdivision and Dispensary, in the Monghyr district, *vice* Assistant Surgeon Bhola Nath Pal, retired.

No 2390D, dated the 27th August 1902.—Assistant Surgeon Mohendra Nath Indra is appointed to do supernumerary duty at the Medical College Hospital, Calcutta, until further orders.

No. 2404D., dated the 28th August 1902.—Assistant Surgeon Upendra Nath Brahmachari, Teacher of Materia Medica and Pharmacy in the Dacca Medical School, is allowed privilege leave for three months, under article 291 of the Civil Service Regulations, with effect from the 15th September 1902, or any subsequent date on which he may avail himself of it.

No. 2415D., dated the 28th August 1902 —Assistant Surgeon Chandra Kanta Chakravarti did supernumerary duty at the Chapra Dispensary from the 2nd to the 23rd July 1902, both days inclusive.

No. 2418D, dated the 28th August 1902.—Assistant Surgeon Chandra Kanta Chakravarti is appointed to act at the Chapra Dispensary, with effect from the 24th July 1902, during the absence, on deputation, of Assistant Surgeon Kunja Lal Sanyal, or until further orders.

No. 2451D., dated the 30th August 1902.—Assistant Surgeon Hari Charan Sen, of the Deoghur Subdivision and Dispensary, in the Sonthal Parganas district, is allowed leave for six months, viz., privilege leave for eleven days under article 264 (*a*) of the Civil Service Regulations, with effect from the date on which he is relieved of his duties, and sick leave for the remaining period under article 369 of the Regulations.

No. 2454D., dated the 30th August 1902.—Assistant Surgeon Ganendra Nath Mitra is appointed, with effect from the 17th June 1902, as Medical and Surgical Registrar in the Medical College Hospital, Calcutta, *vice* Assistant Surgeon Satya Saran Chakravarti, transferred.

No. 2457D, dated the 30th August 1902.—Assistant Surgeon Ganendra Nath Mitra did supernumerary duty at the Medical College Hospital, Calcutta, from the 29th April to the 16th June 1902, both days inclusive.

T. H. HENDLEY, COL., I.M.S.,
Inspector-General of Civil Hospitals, Bengal.

EDUCATION DEPARTMENT, BENGAL.

Subordinate Educational Service.

The 18th August 1902.—Babu Rati Kanta Laha, a Sub-Inspector of Schools under the District Board of Nadia, was granted by the Board privilege leave for ten days in continuation of that already granted to him.

The 19th August 1902.—Babu Mon Mohan Chandra, B.A., an Assistant Master, Birbhum Zilla School (class V), is allowed leave of absence for fifteen days, under article 306 (*b*) of the Civil Service Regulations, in extension of that granted to him under the orders of the 21st July 1902

The 21st August 1902.—Babu Purna Chandra Bhattacharjea, M A., an Assistant Master in the Ranchi Zilla School (class VIII), is allowed leave for one month, under article 306 (*b*) of the Civil Service Regulations, with effect from the 2nd August 1902, or the date on which he availed himself of it.

Babu Sri Lal Som, B.A., Assistant Head Master of the Hooghly Collegiate School (class IV), is allowed leave of absence for four weeks, under article 306 (*b*) of the Civil Service Regulations, with effect from the 4th August 1902.

Babu Siddheswar Ganguli, M.A., an Assistant Master of the Hooghly Collegiate School (class VII), is appointed to act as Assistant Head Master of the same institution, during the absence, on leave, of Babu Sri Lal Som, or until further orders.

Babu Dhanush Dhary Prasad Sinha, M.A, an Assistant Master in the Bihar School of Engineering (class VIII), is allowed leave for three months, under article 369 of the Civil Service Regulations, with effect from the 2nd August 1902.

Babu Mahendra Kumar Sen Gupta is appointed to act as an Assistant Master in the Bihar School of Engineering and in class VIII of the Subordinate Educational Service, during the absence, on leave, of Babu Dhanush Dhary Prasad Sinha, or until further orders.

The 23rd August 1902.—Babu Aghor Nath Banerjea, M A., Head Master of the Barasat Government School (class IV), is appointed, on probation for three months, to be an Assistant in the office of Director of Public Instruction, on the pay of his own grade, *vice* Babu Hari Nath Sen, deceased.

Babu Kali Prasanna Banerjea, B.A., Assistant Head Master of the Barasat Government School (class VII), is appointed substantive *pro tempore* Head Master of the Barasat Government School, on the pay of his own grade, *vice* Babu Aghor Nath Banerjea, transferred.

Babu Bisseswar Banerjea, B.A., an Assistant Master, and now Officiating Assistant Head Master of the Jessore Zilla School (officiating in class VIII), is appointed to be substantive *pro tempore* Assistant Head Master of the Barasat Government School, *vice* Babu Kali Prasanna Banerjea, promoted.

Babu Bisseswar Banerjea is also appointed substantively *pro tempore* to class VIII of the Subordinate Educational Service, with effect from the 12th July 1902, in the resulting vacancy consequent on the death of Babu Hari Nath Sen.

The 25th August 1902.—Babu Har Kisor Chaudhuri, an Assistant (Drawing) Master of the Chittagong Collegiate and Training Schools and Chittagong Madrasah (class VI), is allowed leave for two months, under article 306 (*b*) of the Civil Service Regulations, with effect from the 17th July 1902.

Babu Rajani Kanta De is appointed to act as an Assistant (Drawing) Master of the Chittagong Collegiate and Training Schools and Chittagong Madrasah and in class VIII of the Subordinate Educational Service, during the absence, on leave, of Babu Har Kisor Chaudhuri, or until further orders.

A. PEDLER,
Director of Public Instruction, Bengal.

ORDERS BY THE HON'BLE THE VICE-CHANCELLOR AND SYNDICATE OF THE CALCUTTA UNIVERSITY.

1. The undermentioned candidates have passed the B. E. Examination, 1902:—

FIRST DIVISION.

(IN ORDER OF MERIT).

1.	Kar, Upendranath	... ...	Civil Engineering College, Sibpur.
2.	Deb, Munindranath	... ...	Ditto.
3.	Nandi, Kalicharan	... ...	Ditto.
4	Chattopadhyay, Herambanath	...	Ditto.
5.	„ Madhusadan	...	Ditto.

SECOND DIVISION.

(IN ORDER OF MERIT).

1.	Sinha, Mahendranath	... ...	Civil Engineering College, Sibpur.
2.	Sen, Satischandra	... ...	Ditto.
3.	Chaudhuri, Jamininath	... ...	Ditto.
4.	Chattopadhyay, Nagendranath	...	Ditto.
5.	Sengupta, Jaminikanta	... ...	Ditto.
6.	Stone, T. S. F.	... ...	Ditto.
7.	Chakrabarti, Munindranath	.. ...	Ditto.
8.	Sarma, Rohindranath	... ...	Ditto.

2. Jogindranath Datta of the Presidency College is hereby declared to have obtained Second Class Honours in Geology at the last B.A. Examination.

K. C. BANURJI, *Offg. Registrar.*

SENATE HOUSE, *the 20th August 1902.*

Office Memorandum of the Inspector of Schools, Bhagalpur Division.

UNIVERSITY ENTRANCE EXAMINATION, 1903.

TEST-EXAMINATION OF PRIVATE STUDENTS.

1. A student who does not appear from any school, or who has been transferred since the 1st September next preceding the examination, without the consent of the Inspector, to the school from which he appears, will be treated as a private student.

2. All private students are required to appear at the test-examination of a zilla school. No private student will be admitted to the test-examination, unless accompanied, for the purpose of identification, by some person known to the Head Master.

3. The first day of the test-examination in all zilla schools in the Bhagalpur Division will be the 15th December 1902.

4. Each private student will have to pay a fee of Rs. 2 for permission to appear at the test-examination to the head of the institution at which he appears. The balance of fees, after payment of expenses (stationery, &c.), will go as remuneration to the examiners.

5. Candidates for the test-examination should apply to this office not later than the 8th November 1902. They should forward the certificates granted to them under the transfer rules by the Head Master of the school in which they last read. In the case of a candidate who had failed at a previous Entrance Examination and did not join a school afterwards, the Registrar's receipt, in original, will be accepted in lieu of the transfer certificate.

6. A student, who had failed to pass the annual examination for promotion to the first class at the end of session 1901-1902 and then left the school, cannot under any circumstances be allowed to appear at the Entrance Examination that will be held on the 2nd March 1903 and following days.

7. Each candidate should submit with his application a statement showing—

(1) Age.
(2) Residence.
(3) Father's name.
(4) Second language, besides English.
(5) Whether he appeared at any previous Entrance Examination.

8. *Bonâ fide* teachers employed in any of the recognised schools in the Bhagalpur Division may be admitted to the test-examination on payment of the prescribed fee, provided they can produce certificates of service and character from their employers, or from the Deputy Inspector of the district concerned.

9. The forms of application for permission to appear at the Entrance Examination will be signed by the Head Master of the zilla school at which the candidates have undergone the test, and will be forwarded by him to the Inspector for countersignature.

10. Applications and fees for admission to the Entrance Examination must be forwarded to the Registrar of the Calcutta University by the private candidates themselves, so as to reach his office on or before the 22nd January 1903.

F.A. AND B.A. EXAMINATION, 1903.

1. Deputy Inspector of Schools, Sub-Inspector of Schools, and *bonâ fide* teachers of recognised English schools, in the Bhagalpur Division of two years' standing, *i.e.*, who have served as such for full two academical sessions, or for six months in the case of those who were admitted to a former examination of the same class, will be admitted to the above examinations. These latter must have served for six months prior to the submission of their applications to the Inspector for countersignature. School-masters should produce certificates of character and length of service (with dates) from the Managers of the schools in which they are employed. Their applications must reach this office not later than the 5th January 1903.

2. Candidates for the B.A. Examination must forward with the applications their F.A. certificates, and those for the F.A. Examination their Entrance certificates.

3. Candidates should read carefully the certificate which this office will have to sign, and must be careful to supply all information and documents required, without which the Inspector must decline to sign it.

4. The F.A. and B.A. Examinations in 1903 will be held on the 16th March 1903 and following days.

5. Applications and fees for admission to the above examination must be forwarded to the Registrar, Calcutta University, by the candidates themselves so as to reach his office on or before the 2nd February 1903.

BHAGALPUR,
The 23rd August 1902.

P. CHATTERJEE,
Inspector of Schools, Bhagalpur Division.

Office Memorandum of the Inspector of Schools, Chota Nagpur Division.

UNIVERSITY ENTRANCE EXAMINATION, 1903.

TEST-EXAMINATION OF PRIVATE STUDENTS.

1. A student who does not appear from any school, or who has been transferred after the 31st August, without the consent of the Inspector, to the school from which he appears, will be treated as a private student. The term "private student" includes *School Masters*.

2. All private students are required to appear at the test-examination of a zilla school. No private student will be admitted to the test-examination, unless accompanied, for the purpose of identification, by some person known to the Head Master of the institution at which he appears.

3. The first day of the test-examination in all zilla schools in the Chota Nagpur Division will be the 15th December 1902.

4. Each private student will have to pay a fee of Rs. 2 for permission to appear at the test-examination to the head of the institution at which he appears. The balance of such fees, after payment of expenses (stationery, &c.), will go as remuneration to the Examiners.

5. Candidates for the test-examination should apply to this office not later than the 11th November 1902. They should forward the certificates granted to them under the transfer rules by the Head Master of the school in which they last read. In the case of a candidate who had failed at a previous Entrance Examination and did not join a school afterwards, the Registrar's receipt, in original, will be accepted in lieu of the transfer certificate.

6. A student who had failed to pass the annual examination for promotion to the first class at the end of session 1901-1902 and then left the school will not, under any circumstances, be allowed to appear at the Entrance Examination of 1903.

7. Each candidate should submit with his application a statement showing—

(1) Age.
(2) Residence.
(3) Father's name.
(4) Second language, besides English.
(5) Whether he appeared at any previous Entrance Examination.

8. *Bonâ fide* teachers employed in any of the recognised schools in the Chota Nagpur Division may be admitted to the test-examination on payment of the prescribed fee, provided they can produce certificates of service and character from their employers, or from the Deputy Inspectors of the districts concerned.

9. The forms of application for permission to appear at the Entrance Examination will be signed by the Head Master of the zilla school at which the candidates have undergone the test, and will be forwarded by him to the Inspector for countersignature.

10. The applications and fees for admission to the Entrance Examination must be forwarded to the Registrar of the Calcutta University by the private candidates themselves, so as to reach his office on or before the 22nd January 1903.

11. The Entrance Examination in 1903 will be held on the 2nd March 1903 and following days.

F.A. AND B.A. EXAMINATION, 1903.

1. Deputy Inspectors of Schools, Sub-Inspectors of Schools, and *bonâ fide* teachers of recognised English schools in the Chota Nagpur Division of two years' standing, *i.e.*, who have served as such for full two academical sessions, or for six months in the case of those who were admitted to a former examination of the same class, will be admitted to the above examinations. These latter must have served for six months prior to the submission of their applications to the Inspector for countersignature. School Masters should produce certificates of character and length of service (with dates) from the Managers of the schools in which they are employed. Their applications must reach this office not later than the 3rd January 1903.

2. Candidates for the B.A. Examination must forward with the applications their F.A. certificates, and those for the F.A. Examination their Entrance certificates.

3. Candidates should read carefully the form of the certificate which this office will have to sign, and supply all information and documents required, without which the Inspector will decline to sign it.

4. The F.A. and B.A. Examinations in 1903 will be held on the 16th March 1903 and following days.

5. Applications and fees for admission to the above examinations must be forwarded to the Registrar, Calcutta University, by the candidates themselves so as to reach his office on or before the 2nd February 1903.

M. GHOSE,
Inspector of Schools, Chota Nagpur Division.

PURULIA, *the 24th July 1902.*

OFFICE MEMO.

RULES FOR APPEARING AT THE F.A. AND B.A. EXAMINATIONS FOR CANDIDATES FROM THE RAJSHAHI DIVISION WHO ARE NOT STUDENTS OF ANY AFFILIATED INSTITUTION.

DEPUTY INSPECTORS of Schools, Sub-Inspectors of Schools, and *bonâ fide* masters of English schools, who have served as such for the full period of two academical years, or of six months after the examination of the same class last held by the University, in the case of those only who were admitted to a former examination of that class, will be admitted to the abovementioned examinations. The applications of school-masters should be accompanied by

certificate of length of service from the Secretaries or Managers of the schools in which they are employed, and should reach this office not later than the 6th January 1903. The application of a school-master for permission to appear at the F.A. or B.A. examination should be signed by him in the *presence* of the Secretary or a Member of the Managing Committee of the school in which he is employed. The application should be forwarded to this office for countersignature, together with the Registrar's certificate, to prove, if this be the case, that the candidate has appeared at the examination in a previous year, and the certificate in proof of his having passed the Entrance or F.A. examination, as the case may be, and it will be sent back to him (the candidate), who will have to send it, together with the examination fee, to the Registrar of the University *direct*. School-masters are not required to pay any fee for getting their application for permission to appear at either of the abovementioned examinations countersigned by this office.

2. Candidates should read carefully the form of the certificate which this office is required to sign, and should be careful to supply all information and documents required, including the Registrar's receipt in the case of those school-masters who have been admitted to a former examination of the same class, without which the Inspector must decline to sign the certificate.

3. By *bonâ fide* masters of schools are to be understood masters who hold regularly paid appointments in English schools, teaching at least the M.E. course.

JALPAIGURI,
The 4th August 1902.

N. L. HALLWARD,
Offg. Inspector of Schools, Rajshahi Division.

Rajshahi Divisional Inspector's Office Memo.

UNIVERSITY ENTRANCE EXAMINATION.

PRIVATE STUDENTS.

1. *Private students* are those who do not appear from any school or who have been transferred from one school to another after the 31st August without the consent of the Inspector. The term 'private student' includes *school-masters*.

2. Private students must appear at the test-examination of one of the following institutions:—

Those from the—	At the test-examination of—	Date of test-examination.
1	2	3
1. Rajshahi district...	Rajshahi Collegiate School (with the Principal's permission).	On the dates fixed by the Principal of the Rajshahi College.
2. Pabna ,, ...	Pabna Zilla School ...	15th December 1902.
3. Bogra ,, ..	Bogra ditto ...	
4. Rangpur ,, ...	Rangpur ditto ...	
5. Dinajpur ,, ...	Dinajpur ditto ...	
6. Jalpaiguri ,, ...	Jalpaiguri ditto ...	
7. Darjeeling ,, ...	Darjeeling High School ...	

The examinations will begin as stated above, and each private student will pay a fee of Rs. 2 to the head of the institution at which he appears for examination. The balance after payment of expenses (stationery, etc.) will go as remuneration to the examiners.

3. Applications for permission to appear must be sent so as to reach *this office* not later than the 24th November with the following information, etc.—

From Private Candidates proper.

(*a*) The name of the school in which the candidate last studied.
(*b*) The transfer certificate (in original) granted to the candidate from the same; or
(*c*) In the case of a candidate who previously appeared at the Entrance examination, the Registrar's receipt (in original) for the fee paid.
(*d*) Age of the candidate.

From School-masters.

(*e*) A certificate from the Secretary or Proprietor of the school in which the candidate is serving to the effect that he has been a *bonâ fide paid* teacher of the school in which he teaches, and has been so ever since the 1st June 1902. In case of a school-master who has served *in more than one school*, he must produce certificates from the several schools in proof of his having been a *bonâ fide paid* teacher all along since the 1st June 1902.

Failing to produce the above certificate or certificates, a school-master will be subject to the rules applicable to *bond fide* private candidates, as given above.

4. If this office is satisfied that all is in order, the Inspector will countersign and return the application, and this then will be the candidate's passport for admission *to the test-examination.*

5. The Head Master of an institution (one of those named above) should direct private students to appear before him not later than the 2nd January with their applications for admission to the Entrance examination, and in the case of those candidates who have satisfied the test, he will cause them to sign their application forms in his presence, and will grant the necessary certificates, and then forward the applications to this office for countersignature, after which they will be sent by the Inspector *direct* to the candidates.

6. Expedition is necessary in carrying out all these instructions, and candidates should be *most careful* to give their names and addresses written legibly and distinctly, so that no mistake may be likely to occur.

7. *Under no circumstances should the entrance fee be sent to this office.*

8. Private students will understand that the test-examination of any schools other than those named above will not be accepted by this office.

9. Addresses of private students should be supplied to this office.

JALPAIGURI,
The 4th August 1902.

N. L. HALLWARD,
Offg. Inspector of Schools, Rajshahi Division.

NOTIFICATIONS OF THE BOARD OF REVENUE.

No. 2229B.

NOTICE is hereby given that the Tenth Sale of Opium, the Provision of 1900-1901, will be held at the Government Opium Sale-room, No. 2 Bankshall Street, on Monday, the 29th September 1902, at 11 A.M., and will comprise 4,000 chests, viz:—

	Chests.
Opium manufactured at the Patna Factory, consisting of	2,000
Ditto ditto at the Ghazipur Factory, consisting of ...	2,000
Total ...	4,000

2nd.—The general conditions of the sale now advertised will be the same as usual. They may be ascertained by reference to the Notification issued on the 19th November 1901, and published in the *Government* and *Exchange Gazettes*, or on personal application at the Office of the Board of Revenue.

3rd.—The latest dates for deposit and clearance will be the 4th and 14th October 1902, respectively, that is to say, no Bank of Bengal Receipts, Government Promissory Notes, or other public securities that may be tendered for deposit in redemption of Promissory Notes given by purchasers in the sale-room will be received after 1-30 P.M. of Saturday, the 4th October 1902, and no Bank of Bengal Receipts in full payment of lots will be accepted after 3-30 P.M. of Tuesday, the 14th October 1902.

4th.—In addition to the quantity above advertised for sale, the following quantities, more or less, of the opium manufactured at the Patna and Ghazipur Factories will be brought to sale down to December next, on or about the dates specified below. The Board of Revenue, however, reserve to themselves the right of altering these dates, should circumstances render it expedient to do so:—

DATES.	Manufactured at the Patna Factory; about chests.	Manufactured at the Ghazipur Factory; about chests.	Total; about chests.
On or about Monday, 3rd November 1902 ...	2,000	2,000	4,000
On or about Monday, 1st December ,, ...	2,000	2,000	4,000
Total ...	4,000	4,000	8,000

By order of the Board of Revenue, L. P.,

H. WHEELER, *Secretary.*

BOARD OF REVENUE, L. P., CALCUTTA, *the 25th August 1902.*

ELECTION OF MUNICIPAL COMMISSIONERS.

NOTIFICATION.

IT is hereby notified for general information that a bye-election will be held on Monday, the 29th September 1902, under section 27 of the Bengal Municipal Act, III (B.C.) of 1884, as amended by Act IV (B.C.) of 1894, in the Siwan Municipality, in the district of Saran, for the election of a Commissioner for that Municipality in the place of Maulvi Shaikh Abdul Rahman, deceased.

E. F. GROWSE, *Addl. Commissioner.*

PATNA COMMR.'S OFFICE, BANKIPORE, *the 27th August 1902.*

NOTIFICATION.

IT is hereby notified for general information that the following gentlemen have been elected, under section 9 of the Local Self-Government Act, III (B C.) of 1885, at the recent general elections, to be members of the several Local Boards in the district of Nadia representing the thanas noted against each :—

Name of Local Board.	Name of thana.	Name of person elected.
Sadar ...	Kotwali ...	Mr. Bipra Das Pal Chowdhuri.
		Babu Pulin Behari Lahiri.
	Hanskhali ...	,, Mohini Mohan Gupta.
	Chapra ...	,, Ratan Lal Haldar.
	Krishnagunge ...	,, Nanda Gopal Bhaduri.
	Nakashipara ...	,, Hemadri Nath Mukerjee.
		,, Baidya Nath Dutta.
	Kaligunge ...	,, Ram Renu Banerjee.
Ranaghat ...	Ranaghat ...	,, Hrishikesh Ganguli.
		,, Nagendra Nath Roy.
	Chakdaha ...	,, Hari Mohon Dutt.
		,, Bonomali Mukerjee.
		,, Rajani Kanta Mukerjee.
	Santipur ...	Munshi Mahamed Kayem.
Kushtia ...	Kumarkhali ..	Babu Rai Charan Das.
		Mir Mohsen Ali.
	Nawpara ...	Munshi Fazlar Rahaman.
Meherpur ...	Meherpur ...	Babu Ratan Lal Biswas
	Tehatta ...	,, Josoda Kumar Dutt.
		,, Asutosh Sarkar.
	Gangni ...	,, Bhupati Chandra Biswas.
	Karimpur .	,, Rajendra Narain Bagchi.
		,, Ram Prosad Bagchi.
Chuadanga ...	Chuadanga ...	Munshi Abdar Rahim Mullick.
	Alamdanga ...	Babu Radha Madhab Das Mohanta.
		,, Shyama Charan Biswas, B L.
	Damurhuda ...	,, Beni Madhab Pal Chowdhuri.
		,, Jyotish Chandra Pal Chowdhuri.
	Jivannagar ...	,, Jogendra Nath Sinha, B L.

M. FINUCANE, *Commissioner.*

COMMR.'S OFFICE, PRESY. DIVN., CALCUTTA, *the 28th August 1902.*

NOTIFICATION.

IT is hereby notified for general information that, under Rule 21 (*b*) of the Rules for the management of Hospitals and Dispensaries under the supervision of the Government of Bengal, Babu Lalit Madhab Roy is appointed Member and Secretary of the Committee for the management of the Manihari Dispensary, in the district of Purnea, in place of Babu Krishna Chandra Bose, resigned.

H. C. WILLIAMS, *Commissioner.*

COMMR.'S OFFICE, BHAGALPUR, *the 26th August 1902.*

NOTIFICATION.

IT is hereby notified for general information that the undermentioned gentlemen have been appointed, under Rule 21 (*b*) of the Rules for the management of the Charitable Hospitals and Dispensaries in Bengal, to be members of the Committee for the management of the Raghunathpur Dispensary, in the district of Manbhum :—

1. Babu Kalipada Chatterjee, Municipal Commissioner—Member.
2. ,, Kulada Prosad Sarkar, ,, ,, ,,
3. ,, Binode Behari Chakrabarti, ,, ,, ,,
4. ,, Upendra Krishna Dutt, Pleader—Member.
5. ,, Gobinda Chandra Bhuttacharjee, Pleader—Member and Secretary.
6. ,, Kali Proshad Banerjee, Landholder—Member.
7. Civil Medical Officer, Purulia—*Ex-officio* Member.
8. Munsif, Raghunathpur—*Ex-officio* Member and President.

F. A. SLACKE, *Offg. Commissioner.*

COMMR.'S OFFICE, CAMP PURULIA, *the 27th August 1902.*

NOTIFICATION.

IT is hereby notified for general information, under Rule 21 (*b*) of the Dispensary Rules, that the Bazitpur Charitable Dispensary Managing Committee, at a meeting held on the 29th June 1902, appointed Babu Upendra Nath Biswas, 2nd Munsif of Bazitpur, to be a member of the said Committee, *vice* Babu Ramesh Chandra Sen, transferred.

GUNGA N. ROY, *Pers. Asst.*, for *Commissioner.*

DACCA COMMR.'S OFFICE, *the 27th August 1902.*

NOTIFICATION.

IT is hereby notified for general information that, under Rule 21 (*b*) of the Dispensary Manual, Babus Rajani Kanta Kundu and Radha Raman Shaha have been appointed members of the Managing Committee of the Charitable Dispensary at Kumarkhali, in the district of Nadia, *vice* Babus Rajani Kanta Lahiri and Debendra Nath Kundu, resigned.

M. FINUCANE, *Commissioner.*

COMMR.'S OFFICE, PRESY. DIVN., CALCUTTA, *the 27th August 1902.*

NOTIFICATION.

IT is hereby notified for general information, under Rule 21 (*b*) of the Dispensary Rules, that the following gentlemen have been appointed members of the Managing Committee of the Katwa Dispensary :—

The Subdivisional Officer of Katwa.
The Civil Surgeon of Burdwan.
Babu Sarat Chandra Sur.
,, Sita Nath Bhobani.
Babu Radhaballav Roy.
,, Pramatha Krishna Singh.
,, Bepin Behari Chaudhuri.
,, Govinda Pada Singh.

R. CARSTAIRS, *Commissioner.*

COMMR.'S OFFICE, BURDWAN DIVN., CHINSURA, *the 29th August 1902.*

The Calcutta Gazette.

WEDNESDAY, SEPTEMBER 3, 1902.

PART IA.

Orders and Notifications by the Government of India, &c.

[*Reprinted from the "Gazette of India."*]

The following orders, issued by the Government of India in the Home Department, are republished for general information.

C. E. BUCKLAND,
Chief Secy. to the Govt. of Bengal.

NOTIFICATIONS.

ESTABLISHMENT.

Simla, the 29th August 1902.

No. 514.—Mr. H. H. Risley, C.I.E., of the Indian Civil Service, is appointed to officiate as Secretary to the Government of India in the Home Department, with effect from the date of assuming charge of that office.

MEDICAL.

The 28th August 1902.

No. 1089.—The services of Captain H. J. Walton, M.B., F.R.C.S., I.M.S. (Bengal), are placed temporarily at the disposal of the Government of the United Provinces.

J. P. HEWETT,
Secy. to the Govt. of India.

The following order, issued by the Government of India in the Military Department, is republished for general information.

C. E. BUCKLAND,
Chief Secy. to the Govt. of Bengal.

Simla, the 29th August 1902.

VOLUNTEER CORPS.

APPOINTMENTS, PROMOTIONS AND RESIGNATIONS.

No. 794.—Calcutta Volunteer Rifles—

Lieutenant-Colonel William Benjamin Oldham, C.I.E., Supernumerary List, resigns his commission, with effect from the 22nd June 1902, and is permitted, on retirement, to retain his rank and to wear the uniform of the Corps.

E. G. BARROW, *Major-General,*
Secy. to the Govt. of India.

LOCAL CELEBRATIONS ON THE 1ST JANUARY 1903 OF THE CORONATION OF THEIR IMPERIAL MAJESTIES KING EDWARD VII, EMPEROR OF INDIA, AND QUEEN ALEXANDRA.

No. 2634, dated Simla, the 28th August 1902.

RESOLUTION—By the Government of India, Home Department.

IN a Proclamation dated the 14th February 1902, His Excellency the Viceroy and Governor-General of India declared his intention to hold an Imperial Darbar for the purpose of celebrating in India the Coronation of their Imperial Majesties King Edward VII, Emperor of India, and Queen Alexandra. The Coronation Darbar will take place at Delhi on January 1st, 1903, and will be followed by other public functions there between that date and the departure of His Excellency the Viceroy and Governor-General on January 10th. The Governor-General in Council is now pleased to issue the following orders for local celebrations of this solemn and auspicious event throughout the rest of His Majesty's Indian Dominions, except Calcutta, on the above-mentioned date. In accordance with the wishes of the community at Calcutta—the head-quarters of the Government of India—the celebration at that place will be deferred till near the end of January, when His Excellency the Viceroy and Governor-General and the Members of the Government of India will be present there.

2. His Excellency in Council desires that the Royal Proclamation, which will be communicated to the Local Governments and Administrations in due time, be publicly read out in English and in the vernacular of the district at the head-quarters of each Local Government and Administration and of each district, by the senior civil officer present at a convenient hour on January the 1st, and that a Royal Salute of 101 guns be fired wherever this is practicable. The hour at which the Proclamation should be read will depend on the date on which the Muhammadan festival of the *Id-ul-Fitr* is celebrated, which again depends on the date of the appearance of the new moon. If the *Id* is celebrated on 31st December 1902, the Proclamation should be read at midday on January 1st, 1903; if the celebration of the *Id* takes place on January 1st, the reading of the Proclamation should be postponed for such time as may be necessary to enable the Muhammadan community to be present after attending the religious service at the *Idgah*. Wherever this can be conveniently arranged, the Proclamation should be read at a local Darbar at which any local honours that may have been conferred by His Majesty the King, Emperor of India, or His Excellency the Viceroy and Governor-General should be announced, and also any certificates of the kind described below that may be granted by the Local Government or Administration should be distributed.

3. The Governor-General in Council directs that, in the evening, the District and Court houses, Telegraph Offices and Post Offices, be illuminated; and invites all local bodies to arrange for the illumination of their public buildings at the same time.

4. It is desired that, as on the occasion of the assumption of the title of Empress of India by Her late Majesty Queen Victoria, and of Her Jubilee in 1897, certificates should be granted by the Local Governments and Administrations to native gentlemen of distinction in the form annexed to this Resolution. It is essential that these certificates should be granted with discrimination, and that they should be reserved for those who have actually rendered services meriting recognition by Government and capable of being distinctly specified in the body of the certificate. It is also necessary that the number of certificates to be granted should be limited in such a manner as to secure that they shall be properly valued.

5. It is the particular desire of the Governor-General in Council that the rejoicings should, as far as possible, be general; that the poor should take part in them; and that by the entertainment of school children, this auspicious event should be impressed on the minds of the younger members of the different communities throughout the country. His Excellency in Council would be glad if arrangements could be made for the feeding of the poor on January 1st, 1903, at all district, subdivisional, tahsili and taluk head-quarters, and for entertainments to the school children at, at all events, the head-quarters of each Local Government and Administration. He hopes, moreover, that it will be found possible to arrange for the feeding of the poor or the entertainment of school children at places other than those just mentioned. The greater the number of places at which entertainments of either or both kinds are given, the better. It appears to His Excellency in Council that the cost of these entertainments ought to be met from the funds of local bodies and the liberality of private individuals, who cannot, in the opinion of the Government of India, better demonstrate their loyalty on this occasion than by providing fireworks or other displays which will be enjoyed by all, by distributing food to the collected poor of the locality, or by giving a treat to the school children of the town or village.

6. January 1st is a holiday under the Negotiable Instruments Act, and of the preceding eight days five will be holidays under that Act. The Governor-General in Council fears that it would be impossible to notify any more holidays under the Act during the period for which rejoicings will be held at Delhi without causing a dislocation of business and inconvenience to the mercantile community throughout the country. His Excellency in Council has therefore determined not to notify any further holidays under the Act, but directs that, subject to the condition that arrangements are made for the despatch of urgent business, all public offices under the Government of India, except those which must remain

open for the proper transaction of commercial business, be closed from the 2nd to the 8th January 1903, inclusive, and requests Local Governments and Administrations to issue similar orders with regard to the offices under their control.

FORM OF CERTIFICATE.

BY Command of His Excellency the Viceroy and Governor-General in Council, this certificate is presented in the name of His Most Gracious Majesty King Edward VII, Emperor of India, to (here enter name, father's name and description) in recognition of (here enter nature of his services or grounds upon which the certificate is given).

The Calcutta Gazette.

WEDNESDAY, SEPTEMBER 3, 1902.

PART IB.

ORDERS BY THE LIEUT.-GOVERNOR OF BENGAL.

MUNICIPAL AND LOCAL.

NOTIFICATIONS.

No. 2475M.—The 29th August 1902.—It is hereby notified for general information that the Lieutenant-Governor is pleased to cancel paragraph 2 of the Government Notification, dated the 24th May 1889, fixing the rate for the levy of fees under section 8 of Bengal Act IV of 1871, as amended by Act II of 1879, in certain bazars and chatties on the Orissa Trunk Road, in the district of Balasore, which was published at page 119, Part IB of the *Calcutta Gazette* of the 5th June 1889.

Balasore.

No. 2473M.—The 30th August 1902.—It is hereby notified that, under section 23 of the Bengal Municipal Act, III of 1884, as modified up to 1st November 1896, the Lieutenant-Governor is pleased to appoint the Subdivisional Officer of Kishanganj to be the *ex-officio* Chairman of the Kishanganj Municipality, in the district of Purnea.

Purnea.

No. 2500M.—The 30th August 1902.—It is hereby notified that, under section 27 of the Bengal Municipal Act, III of 1884, as modified up to 1st November 1896, the Lieutenant-Governor is pleased to appoint Mr. G. Peddie to be a Commissioner of the Sahebganj Municipality, in the district of Sonthal Parganas, *vice* Mr. K. S. Lawrie, resigned.

Sonthal Parganas.

No. 2506L.S.-G.—The 30th August 1902.—It is hereby notified that, under section 19 of the Bengal Local Self-Government Act, III of 1885, the Lieutenant-Governor is pleased to appoint Mr. B. Coventry to be a member of the District Board of Darbhanga, *vice* Mr. M. Smith, resigned.

Darbhanga.

No. 2508L.S.-G.— The 30th August 1902.—It is hereby notified for general information that the Lieutenant-Governor has been pleased to make the following rule, under clause (*i*), section 138 of the Bengal Local Self-Government Act, III of 1885, in supersession of rule 22, Part IXA of the rules made under that section and published under Government Notification, dated 1st July 1888 :—

Rule 22.—All advances to contractors and others shall be made from the District Board's office, and all deposits shall be paid direct into the Treasury, but in special cases the Board may authorise the District Engineer to make such petty advances within prescribed limits as may be considered necessary. The accounts of advances and deposits to be kept in the District Engineer's office will therefore be but memoranda for the guidance of District Engineer in issuing certificates for payment The accounts shall be kept in Forms Nos. 17 and 18, a separate folio being opened for each, and shall be balanced every month.

No. 1475T.M.—The 30th August 1902.—It is hereby notified for general information that, under section 6 (*f*) of the Bengal Ferries Act, I of 1885, the Lieutenant-Governor is pleased to discontinue the public ferry at Ashutia on the Hosseinpur to Kaliachapra Road in the Kishorganj subdivision of the district of Mymensingh.

Mymensingh.

No. 1477T.M.—The 30th August 1902.—It is hereby notified that, under section 27 of the Bengal Municipal Act, III of 1884, as modified up to 1st November 1896, the Lieutenant-Governor is pleased to appoint the Revd. T. E. F. Cole to be a Commissioner of the Darjeeling Municipality, *vice* Mr. B. K. Finnimore, resigned.

Darjeeling.

No. 1480T.M.—The 1st September 1902.—It is hereby notified that, under section 19 of the Bengal Local Self-Government Act, III of 1885, the Lieutenant-Governor is pleased to appoint Babu Ganapati Das to be a member of the Bhadrak Local Board, in the district of Balasore, *vice* Maulvi Abdul Ruf, deceased.

Balasore.

E. W. COLLIN,
Offg. Secy. to the Govt. of Bengal.

The Calcutta Gazette.

WEDNESDAY, SEPTEMBER 3, 1902.

PART II

Advertisements.

[N. B.—Advertisements, Notices, &c., intended for insertion in this part of the Gazette cannot be received after Noon on Monday.]

LAND SALE NOTICES

APPENDIX XXX.

[See Chapter III, Rule 9.]

Advertisement of Sale.

NOTICE is hereby given that the undermentioned plots of land, no longer required by Government, situated along the Assam-Bengal Railway, in the district of Chittagong, will be put up to sale at 11 o'clock on Monday the 22nd September 1902, corresponding with the 6th of Ashwin 1309 B.S., at the Collector's office, Chittagong.

The purchasers of the several plots of land will be subject to the following conditions :—

1st.— The purchasers will have no power to make any excavation on the land nearer than fifteen feet from the Railway fencing, or plough the land closer than three feet from its foundation.

2nd.—If the amount of purchase-money does not exceed Rs. 100, the whole amount must be paid down at once.

3rd.—If the amount of purchase-money exceeds Rs. 100, one-fourth of the amount must be immediately deposited. If the balance be not paid by noon of the fifteenth day after the sale, reckoning the day of sale as one, or if that day be a close holiday, then by noon of the first succeeding office day, the sale shall be cancelled, the sum deposited being forfeited to Government and the lot again put up for sale at the risk of the defaulting purchaser, after issue of advertisement, as in the case of original sale.

4th.— The plots of land will be sold revenue-free to the highest bidders.

5th.—The purchasers shall be put in possession on receipt by the Collector of the orders of the Board confirming the sales.

Consecutive lot number.	Name of district.	Mauza	Number of mile on which land is situate.	Situated on which side of the Railway.	Approximate area of lot in kanis and acres		Land excluded from sale from each plot.		Commencement and termination of lot.	Boundary of lot.
					Maghi kani.	Acre.	Reasons for exclusion.	A. R. P.		
1	2	3	4	5	6		7		8	9
					Kani	A. R. P.				
1	Chittagong	Bhatiary ..	8th mile	East side	43·63	17 2 5	Nil	Nil	Nil	Nil.
2	Ditto ...	Sonaicherry	14th do.	West side	28·57	11 1 27	,,	,,	,,	,,
3	Ditto ..	Bansberia ...	18th do.	Ditto	25·68	10 1 3	,,	,,	,,	,,
4	Ditto ...	Katear	20th do.	East side	35·80	14 1 11	,,	,,	,,	,,
5	Ditto ..	Turial ..	27th do.	West side	29·37	11 2 38	,,	,,	,,	,,
6	Ditto .	Wahedpur ..	32nd do.	Ditto	20·31	9 3 29	,,	,,	,,	,,
7	Ditto ..	Gobania	36th do.	Ditto	23·30	9 1 11	,,	,,	,,	,,
8	Ditto ...	Azamnagar	45th do.	East side	21·10	8 1 30	,,	,,	,,	,,

Chittagong, the26th July 1902.

E. GRAKE, *Collector.*

Notification A.

NOTICE is hereby given, under sections 6 and 13, Act XI of 1859, that the undermentioned estates and shares of estates in the district of Hooghly will be put up for sale at the office of the Collector of that district on the 25th September 1902 at 12 noon for arrears of revenue and other demands which by law are realisable as arrears of land revenue.

When in columns 5, 7, and 9 of the appended statement it is stated that only a share is to be sold, it is to be understood that a separate account is kept for that share.

Tauzi No.	Name of mahal and pargana.	Sadar jama of whole estate.	Whether the whole estate is to be sold.	If only a share is to be sold, specification of such share or shares.	Names of proprietors of property to be sold.	If only a share is to be sold, the sadar jama of such share.	If the whole estate is to be sold, the arrears due from it.	If only a share is to be sold, the arrears due from it.
1	2	3	4	5	6	7	8	9
4082, residuary.	Kalupukhuria, thana Pandua, pargana Arambagh.	Rs. A. P. 13,536 1 1	.....	Residuary, *i. e.*, 2 annas 13 gandas 1 cora 1 kranti share of the estate.	Prem Chand Roy, Rama Podo Roy, and others of Madhobpur, thana Arambagh.	Rs. A. P. 2,253 9 5	Rs. A. P.	Rs. A. P. 7,874 10 4

Hooghly Collectorate, Chinsura, the 30th July 1902.

R. C. HAMILTON, Collector.

Notification A.

NOTICE is hereby given, under sections 6 and 13, Act XI of 1859, that the undermentioned estates and shares of estates in the district of Chittagong will be put up for sale at the office of the Collector of that district on the 8th September 1902 at 12 A.M. for arrears of revenue and other demands which by law are realizable as arrears of land revenue.

When in columns 5, 7 and 9 of the appended statement it is stated that only a share is to be sold, it is to be understood that a separate account is kept for that share.

Tauzi No.	Name of mahal and pargana.	Sadar jama of whole estate.	Whether the whole estate is to be sold.	If only a share is to be sold, specification of such share or shares.	Names of proprietors of property to be sold.	If only a share is to be sold, the sadar jama of such share.	If the whole estate is to be sold, the arrears due from it.	If only a share is to be sold, the arrears due from it.
1	2	3	4	5	6	7	8	9
4098 4119 3113	Thana Chakaria, taraf Sher Masta Khan Chowdhury.	Rs. A. P. 527 6 6	The whole estate will be sold.		Badiajjama, Abdul Majid and others.	Rs. A. P.	Rs. A. P. 60 4 5	Rs. A. P. .....

The amount shown in column 8 represents the arrears due for kist ending 25th February 1902.

Chittagong Collectorate, the 28th July 1902.

E. GEAKE, Collector.

Notification A.

NOTICE is hereby given, under sections 6 and 13, Act XI of 1859, that the undermentioned estates and shares of estates in the district of Tippera will be put up for sale at the office of the Collector of that district on the 26th September 1902 at 12 o'clock for arrears of revenue and other demands which by law are realisable as arrears of land revenue.

When in columns 5, 7 and 9 of the appended statement it is stated that only a share is to be sold, it is to be understood that a separate account is kept for that share.

Tauzi No.	Name of mahal and pargana.	Sadar jama of whole estate.	Whether the whole estate is to be sold.	If only a share is to be sold, specification of such share or shares.	Names of proprietors of property to be sold.	If only a share is to be sold, the sadar jama of such share.	If the whole estate is to be sold, the arrears due from it.	If only a share is to be sold, the arrears due from it.
1	2	3	4	5	6	7	8	9
985	Taluq Sribatsha Das, pargana Gunanundi.	Rs. A. P. 1,232 11 7	Whole ...	.....	Srimati Monyakhoya Chowdhurani, manager on behalf of minor Harendra Chandra *alias* Har Kumar Pal Chowdhury and others.	Rs. A. P.	Rs. A. P. 18 12 2	Rs. A. P. .....
430	Gazipur Monipur Chur No. 24-71, pargana Maizardi.	1,338 1 0	Do. ...	.....	Kashi Chandra Pal Chowdhury and others.	.....	84 14 4	.....
1925	Char near Nogarerkandi No. 311, pargana Uttershahapur.	1,296 10 9	Do. ...	...	Ishan Chandra Dutt and others.	..	202 9 4	.....
1933 21	Pargana Bardakhat Doulatpurjoar: the term is from 1261 to 1310 B.S.	1,879 3 10	Do. ...	.. .	Bepra Charan Ghosh and others.	.....	174 1 0	.....
2396	Shonapur Tajpur, pargana Zasira.	870 10 0	Do. ...		Totammal Ali Chowdhury and others.	.....	200 0 0	.....

Tippera Collectorate, the 26th July 1902.

H. W. SCHOOPE, Collector.

Notification A.

NOTICE is hereby given, under sections 6 and 13, Act XI of 1859, that the undermentioned estates and shares of estates in the district of Muzaffarpur will be put up for sale at the office of the Collector of that district on the 8th September 1902, corresponding with 20th Bhado 1309 F.S., for arrears of revenue and other demands which by law are realisable as arrears of land revenue.

When in columns 5, 7 and 9 of the appended statement it is stated that only a share is to be sold, it is to be understood that a separate account is kept for that share.

Sausi No.	Name of mahal and pargana.	Sadar jama of whole estate.	Whether the whole estate is to be sold.	If only a share is to be sold, specification of such share or shares.	Names of proprietors of property to be sold.	If only a share is to be sold, the sadar jama of such share.	If the whole estate is to be sold, the arrears due from it.	If only a share is to be sold, the arrears due from it.
1	2	3	4	5	6	7	8	9
		Rs. A. P.				Rs. A. P.	Rs. A. P.	Rs. A. P.
806 Rs.	Amwa Kalan Newazun, pargana Babra Champaran.	2,000 12 9	..	Residuary share, 5a. 7p. ... All other shares besides that specified will be excluded from sale.	Babu Isre Prosad and others.	698 9	.....	17 9 7
1680	Baijnathpur Krishn Coomar, pargana Gadhsund.	671 8 1	The whole		Babu Durga Coomar Upadhea and others.	... ..	161 3 0	.....
2485 Rs.	Pojha-Basunt, Chukla Gurjaul, pargana Bisara.	1,693 10 7	.....	Residuary share— A. G. C. KT. Pojha-Basunt ... 5 1 2 2 Barehia and Pojha Zamin ... ... 5 1 2 2 Jahanabad ... ... 5 1 2 2 Ghataro-khas-zamin ... 5 1 2 2 Chuk Rahmat ... ... 5 1 2 2 Hansi Gharam ... ... 5 1 2 2 Ghataro doolum ... 3 16 2 1 Raghoonathpur ... 3 16 0 0 All other shares besides that specified will be excluded from sale.	Babu Zoolumdhari Prosad Singh and others.	537 3 8	.....	106 3 5
5150	Poorab Chhupra Vishwnath Singh, pargana Nanpur.	643 8 7	The whole	...	Babu Dabi Prosad Singh and others.	.. ...	33 10 9	.. ...
1277	Chatarbhoojpur Bhairo Missar, pargana Lutti.	645 12 3	Ditto ...		Rai Manindra Bahadur, minor under the guardianship of Musamat Goolab Kuner, mother, and Babu Moti Chand and others.	. .	849 3 2	.....
1714	Kasnaldah, pargana Tirsath.	855 13 4	Ditto .	... .	Mirza Nasir Hossen and others.	.....	207 2 10	.....

Muzaffarpur Collectorate, the 25th July 1902.

E. V. LEVINGE, Collector

Notification A.

NOTICE is hereby given under sections 6 and 13, Act XI of 1859, that the undermentioned estates and shares of estates in the district of Backergunge will be put up for sale at the office of the Collector of that district on the 26th September 1902 at 12 o'clock for arrears of revenue and other demands which by law are realisable as arrears of land revenue.

When in columns 5, 7 and 9 of the appended statement it is stated that only a share is to be sold, it is to be understood that a separate account is kept for that share.

Tauzi No.	Name of mahal and pargana.	Sadar jama of the whole estate.	Whether the whole estate is to be sold.	If only a share is to be sold, specification of such share or shares.	Names of proprietors of property to be sold.	If only a share is to be sold, the sadar jama of such share.	If the whole estate is to be sold, the arrears due from it.	If only a share is to be sold, the arrears due from it.
1	2	3	4	5	6	7	8	9
		Rs. A. P.				Rs. A. P.	Rs. A. P	Rs. A. P.
1094	Taluq Biswa Nath Sen, of pargana Khanya Bahadurnager.	570 6 11½	Whole estate.	... ..	Ram Narain Sen and others	...	142 6 9	.....
2740	Taluq Durga Gangeswar of pargana Uttar Sahabazpur.	1,037 11 2½	...	Separate account No. 1 for 8 annas' share.	Guru Prosanna Roy and others	518 13 8	.....	54 6 5
4534	Char Sarikol of pargana Jazira.	3,441 11½ 3	Whole estate.	...	Mr. G. L. Garth and Mr. H. L. Weatheral, trustees to the estate of Tojambal Ali Choudhury and others.	..	2,841 11 3	.....
4686	Char Jahapur of pargana Jazira.	5,000 0 0	Ditto .	.....	Ditto ...	.. ...	300 0 0	.....
5235	Gar Makarari, howla No. 1, of Char Tabgi of pargana Dakshin Sahabazpur.	3,677 0 0	Whole howla.	.....	Basanta Kumar Guha	.....	460 0 0	... .

Backergunge Collectorate, the 31st July 1902.

D. WESTON, Collector.

Advertisement of Sale.

NOTICE is hereby given that the undermentioned plots of land, no longer required by Government, situated along the Assam-Benga Railway, in the district of Tippera, will be put up to sale at 12 o'clock on the 26th day of September 1902, corresponding with the 10th Asvin 1309 Fasli, at the office of the Collector of Tippera.

The purchasers of the several plots of land will be subject to the following conditions:—

1st.—The purchasers will have no power to make any excavations on the land nearer than 15 feet from the railway fencing, or plough the lands closer than 3 feet from its foundation.

2nd.—If the amount of purchase-money does not exceed Rs. 100, the whole amount must be paid down at once.

3rd.—If the amount of purchase-money exceed Rs. 100, one-fourth of the amount must be immediately deposited. If the balance be not paid by noon of the fifteenth day after the sale, reckoning the day of sale as one, or if that day be a close holiday, then by noon of the first succeeding office day, the sale shall be cancelled, the sum deposited being forfeited to Government, and the lot again put up for sale at the risk of the defaulting purchaser, after issue of advertisement, as in the case of original sale.

4th.—The plots of land will be sold revenue-free to the highest bidders.

5th.—The purchasers shall be put in possession on receipt by the District Collector of the orders of the Board confirming the sale.

Consecutive lot No.	Name of district.	Pargana and mauza.	Number of mile on which land is situate.	Situated on which side of the railway.	Approximate area of lot in bighas and in acres. B. K. C.	Approximate area of lot in bighas and in acres. A. R. P.	Land excluded from sale from each lot. Reasons for exclusion.	Land excluded from sale from each lot. A. R. P.	Commencement and termination of lot.	Boundary of lot.
1	2	3	4	5	6		7		8	9
1	Tippera ...	Pargana Homnabad, mauza Uttarkul.	At mile No. 78.	South-west of Railway line.	3 6 2	1 0 14·9	.....	.....	Lots Nos. 1 to 18	*North*—Mauza Uttarkul. *South*—Mauza Uttarkul and Railway line. *East*—Mauza Uttarkul. *West*—Railway line.
2	Ditto ...	Pargana ditto, mauza Noagaon.	Ditto	Ditto	0 15 5	0 1 ·4	.....	.....	Ditto	*North*—Mauza Uttarkul and Railway line. *South*—Mauza Noagaon. *East*—Railway line and mauza Noagaon. *West*—Mauza Noagaon.
3	Ditto ...	Pargana ditto, mauza Ashkanta.	At mile No. 75.	East of Railway line.	1 17 0	0 2 19·5	.....	.....	Ditto	*North*—Railway line. *South*—Mauza Ashkanta. *East*—Railway line. *West*—Mauza Ashkanta.
4	Ditto ...	Pargana Homnabad, mauza Lakshanu.	At mile No. 0.	Within ¼ mile of the Railway station.	1 8 11	0 1 35·5	.....	.....	Ditto ...	*North*— *South*— *East*— *West*— Mauza Lakshanu. District Board road.
5	Ditto ...	Pargana Mehar, mauza Upalata.	At mile No. 11.	East of Railway line.	0 17 15	0 1 7·4	.....	.....	Ditto ...	*North*—Mauza Upalata. *South*—Railway line. *East*— *West*— Mauza Upalata.
6	Ditto ...	Pargan Meharkul mauza Bejoypur.	At mile No. 10.	North of Railway line.	2 16 4	0 3 28·7	.....	.....	Ditto ...	*North*—Mauza Bejoypur. *South*—Bikrampur land attached to the Railway fencing. *East*—Bejoypur mauza. *West*—Railway line.
7	Ditto ...	Pargana Mehar, mauza Naora.	At mile No. 91.	East of Railway line.	5 0 8	1 2 25·7	.....	.....	Ditto ...	*North*—Railway line. *South*—Southern bank of Dighi. *East*—Khal or boundary of mauza Borulia. *West*—Dighi water.
8	Ditto ...	Ditto ...	Ditto	Ditto	8 7 8	2 3 2·9	.....	.....	Ditto	*North*—Railway line. *South*—Southern bank of Naora Dighi. *East*—Naora Dighi. *West*—Chandra Kumar Chakerbutty Jahiraddi Patwari and Monirum Dhupi.
9	Ditto ...	Pargana Meharkul mauza Saidpur.	At mile No. 7.	South of Railway line.	47 5 14	15 2 21·4	.....	.....	.....	*North*— *South*— Gangjuri khal. *East*—District Board road. *West*—Gangjuri khal.
10	Ditto ...	Ditto ...	Ditto	Ditto	32 12 8	10 3 5·6	.....	.....	.....	*North*—Gangjuri khal. *South*—Saidpur. *East*—Railway line. *West*—District Board road.
11	Ditto ...	Ditto ...	Ditto	Ditto	10 14 4	3 2 6·6	.....	.....	.....	*North*—Gangjuri khal. *South*—Jirat Gasi and khash patit. *East*—District Board road. *West*—Gangjuri khal.
12	Ditto ...	Ditto ...	Ditto	Ditto	14 12 12	4 3 11·2	.....	.....	.....	*North*—Rajjabali. *South*—Dakatia river. *East*—District Board road. *West*—Gangjuri khal.
13	Ditto ...	Pargana ditto, mauza Harapara.	At mile No. 10.	North of Railway line.	10 12 13	3 2 2·8	.....	.....	.....	*North*—Gangjuri khal. *South*—Khal or Charpara mauza. *East*—Khal, khal side and District Board road. *West*—Dakshin Bejoypur.
14	Ditto ...	Pargana Tora, Tapa Ibrahimpur.	At mile No. 17.	East of Railway line.	120 13 14	39 3 23·8	.....	.....	.....	*North*—Mauza Toragor. *South*—Railway line. *East*—Mauza Toragor. *West*—Hajigunge khal.
15	Ditto ...	Pargana ditto, mauza Kangnish Hatila.	At mile No. 15.	Ditto	98 0 4	32 2 0·9	.....	.....	Lots Nos. 1 to 18...	*North*—Railway line. *South*—Kangnish mauza. *East*—Khal of Sholkhali. *West*—Kangnish.
16	Ditto ...	Pargana ditto, mauza Panchbaria.	At mile No. 23.	Ditto	31 14 13	10 1 38·6	.....	.....	.....	*North*—Debpur brickfield. *South*— *East*— *West*— Mauza Panchbaria.
17	Ditto	Pargana ditto, mauza Debpur.	Ditto	Ditto	43 7 14	14 1 10·9	.....	.....	.....	*North*—Railway line. *South*—Debpur brickfield. *East*— *West*— Debpur mauza.
18	Ditto ...	Pargana ditto, mauza Panchbaria Sota Sundar.	Ditto	Ditto	2 13 8	0 3 21·4	.....	.....	.....	*North*—Panchbaria brickfield. *South*—Dakatia river. *East*—Mauza Panchbaria Sota Sundar. *West*—Mauza Punchbaria Sota Sundar.

Tippera Collectorate, the 2nd August 1902.

H. W. P. SCROOPE, Collector.

Advertisement of Sale.

NOTICE is hereby given that the undermentioned plots of land, no longer required by Government, situated along the Assam-Bengal Railway, in the district of Noakhali, will be put up to sale at 12 o'clock on Monday, the 29th September 1902, corresponding with the 13th Ashwin 1309 B. S., in the office of the Collector of Noakhali.

The purchasers of the several plots of land will be subject to the following conditions:—

1st.—The purchasers will have no power to make any excavations on the land nearer than 15 feet from the railway fencing, or plough the lands closer than 3 feet from its foundation.

2nd.—If the amount of purchase-money does not exceed Rs. 100, the whole amount must be paid down at once.

3rd.—If the amount of purchase-money exceed Rs. 100, one-fourth of the amount must be immediately deposited. If the balance be not paid by noon of the fifteenth day after the sale, reckoning the day of sale as one, or if that day be a close holiday, then by noon of the first succeeding office day, the sale shall be cancelled, the sum deposited being forfeited to Government, and the lot again put up for sale at the risk of the defaulting purchaser, after issue of advertisement, as in the case of original sale.

4th.—The plots of land will be sold revenue-free to the highest bidders.

5th.—The purchasers shall be put in possession on receipt by the District Collector of the orders of the Board confirming the sale.

Consecutive lot number.	Name of district.	Pargana and mauza.	Number of mile on which land is situate.	Situated on which side of the Railway.	Approximate area of lot in bighas and in acres.		Land excluded from sale from each lot.		Commencement and termination of lot.	Boundary of lot.
					B. K. C.	A. R. P.	Reasons for exclusion.	A. R. P.		
1	2	3	4	5	6		7		8	9
					Case No. 1.					
1	Noakhali	Pargana Bedrabad, mauza Sahadebpur.	50	South-west	1 10 6	0 2 0	.....	.....	.....	*North*—Road to Railway station. *South*—Feni school compound. *East*—Ditch. *West*—Cart stand.
2	Ditto ...	Pargana Bedrabad, mauza Barahipur.	56	North-east	4 8 12	1 1 35	.....	.....	.....	*North*—Village road. *South*—, *East*—, *West*— } Khal.
3	Ditto ...	Ditto ...	56	Ditto ...	4 9 0	1 1 35	.....	.....	.....	*North*—Cultivated land. *South*—Village road. *East*—Cultivated land. *West*—Tank.
					Case No. 2.					
4	Ditto ...	Pargana Alahabad, mauza Fatehpur.	58	South-west	0 11 1	0 0 29	.....	.....	.....	*North*—Railway land. *South*—, *East*—, *West*— } Cultivated land.
5	Ditto ...	Pargana Bedrabad, mauza Matbaria.	58	North ...	0 8 14	0 0 23	.....	.....	.....	*North*—Cultivated land. *South*—Railway land. *East*—, *West*— } Cultivated land.
6	Ditto ...	Ditto ...	58	North-east	0 4 8	0 0 12	.....	.....	.....	*North*—Cultivated land. *South*—Railway land. *East*—, *West*— } Cultivated land.
7	Ditto ...	Pargana Amirabad, mauza Fazilpur.	50	Ditto ...	0 13 14	0 0 37	.....	.....	.....	*North*—Cultivated land. *South*—Railway land. *East*—, *West*— } Cultivated land.
					Case No. 3.					
8	Ditto ...	Pargana Amirabad, mauza Rajnagar.	49	North ...	14 15 3	4 3 21	.....	.....	.....	*North*—Homestead land. *South*—Railway land. *East*—Muhuri river. *West*—Railway land.

Noakhali, the 29th July 1902.

SASI BHUSAN SEIN, Depy. Collector in charge.

Notification B.

NOTICE is hereby given, under sections 5 and 13, Act XI of 1859, that unless the arrears mentioned below are paid on or before the next latest date of payment, viz., the 28th June 1902, the undermentioned estates or shares of estates in the district of Tippera will be put up for sale at the office of the Collector of that district on the 26th September 1902 at 12 o'clock for the said arrears.

When in columns 5, 7 and 9 of the appended statement it is stated that only a share is to be sold, it is to be understood that a separate account is kept for that share.

Tauzi No.	Name of mahal and pargana.	Sadar jama of whole estate.	Whether the whole estate is to be sold.	If only a share is to be sold, specification of such share or shares.	Names of proprietors of property to be sold.	If only a share is to be sold, the sadar jama of such share.	If the whole estate is to be sold, the arrears due from it.	If only a share is to be sold, the arrears due from it.	Nature and amount of demand for which to be sold.
1	2	3	4	5	6	7	8	9	10
		Rs. A. P.				Rs. A. P.	Rs. A. P.	Rs. A. P.	Rs. A. P.
1925	Pargana Uttar Sahapur chur near Nagarer Kandi, No. 211.	1,206 10 9	Whole ...	.....	Ishan Chandra Datta and others.	.....	202 9 4	.....	202 9 4

Tippera Collectorate the 29th May 1902.

H. W. SCROOPE, Offg. Collector.

Notification A.

NOTICE is hereby given, under sections 6 and 13, Act XI of 1859, that the undermentioned estates and shares of estates in the district of Midnapore will be put up for sale at the office of the Collector of that district on Friday, the 26th September 1902 for arrears of revenue and other demands which by law are realisable as arrears of land revenue.

When in columns 5, 7 and 9 of the appended statement it is stated that only a share is to be sold, it is to be understood that a separate account is kept for that share, and that the other share or shares in the estate are excluded from the sale

Tauzi No.	Name of mahal and pargana.	Sadar jama of whole estate.	Whether the whole estate is to be sold.	If only a share is to be sold, specification of such share or shares.	Names of proprietors of property to be sold.	If only a share is to be sold, the sadar jama of such share.	If the whole estate is to be sold, the arrears due from it.	If only a share is to be sold, the arrears due from it.
1	2	3	4	5	6	7	8	9
		Rs. A. P.				Rs. A. P.	Rs. A. P.	Rs. A. P.
154	Pargana Bajarpore, mahal Panchbajari.	650 10 8	Entire ...	.....	Sarat Chandra Jana and others.	.....	71 2 8	.....
276	Pargana Balisita, mahal Bhitarbinode.	1,658 14 10	Do. ...	.. .	Maheswar Masanta and others.	.....	180 4 9	.....
374	Pargana Bhaitgar Bahirimutha, mahal Bhagabanpore *alias* Bar Bhagabanpore.'	1,010 9 5	.....	S. A. I	Madhusudan Das	505 4 9	.....	37 12 0
588	Pargana Dakhinmal, mahal Haripore.	6,769 1 5	... ..	S. A. II	Haripriya Devi	3,384 5 9	.....	740 0 3
921	Pargana Kasijora, mahal Chakdaha *alias* Radhaballavpore.	2,163 8 0 with police.	.....	Residuary share excluding S. A. Nos. I, II, III, IV, V, VI.	Srimaty Niroda Moyi Dasi and others.	1,232 9 5	.....	283 11 9
937	Pargana Kasijora, mahal Gar Purusothampore *alias* Chaitannapore.	738 10 8	....	Residuary share excluding S. A. Nos. I and II.	Ganga Narain Maity and others.	590 14 8	.....	86 7 3
939	Pargana Kasijora, mahal Gazni.	2,467 8 3	Entire ...	.....	Srinarain Pal	.....	270 0 0	.....
944	Pargana Kasijora, mahal Gumukpota.	3,185 0 0 with police.	.....	S. A. I	Mani Mohon Ray proprietor Jogendra Nath Pathak mortgagee.	1,592 8 0	.....	174 8 0
947	Pargana Kasijora, mahal Gogras Patna.	1,513 2 3 with police.	.....	Residuary share excluding S. A. 1.	Shaikh Sorfuddin and others	604 9 9	.....	55 3 9
948	Pargana Kasijora, mahal Gogras Keshabbar.	1,005 8 8	Entire ...	.....	Srimotya Niroda Moyi Dasi and others.	.....	110 0 0	.....
974	Pargana Kasijora, mahal Khandakhola.	936 11 2	Do. ...	.....	Srimotya Kailashi Dasi and others.	.....	102 8 0	... ..
979	Pargana Kasijora, mahal Manahorpur *alias* Prasad Chak.	1,625 15 6	Do. ...	... ..	Srimotya Niroda Moyi Dasi and others.	.....	178 8 0	.....
1007	Pargana Kasijora, mahal Purba Itra.	43,145 8 3 with police.	.....	Residuary share excluding S. A. Nos. 1, 3, 4, 5, 6, 7, 8, and 9.	Manik Lal Seal	13,109 5 7	.....	75 7 6
1019	Pargana Kasijora, mahal Sadhuapota.	675 1 11	Entire ...	.....	Srimotya Tarangini Dassi ...	.....	74 4 0	... .
1030	Pargana Kasijora, mahal Uther Usatpore.	3,473 9 7	.....	S. A 8	Nimai Chand De and others	640 0 0	.....	70 0 0
1066	Pargana Kasijora, kismat mahal Palsa Uther.	2,030 1 2 with police.	.....	Residuary share excluding S. A. 1, 2, 3, 4.	Amarnath Ghose and others	532 5 2	.....	59 4 9
1346	Pargana Khatnagor, mahal Dewli.	1,069 5 9	Entire ...	.....	Nimai Chand De	.....	117 14 3	.....
1467	Pargana Khander, mahal Bansgeria *alias* Sahorda.	2,098 8 6	.....	Residuary share excluding S. A. Nos. 4, 5, 6, 8, 9, 10, 11, 12, 13, 14, 15, 16.	Sibaprasad Bhakhat and others.	975 12 4	.....	24 4 1
1730	Pargana Moynachore, mahal Anandapore.	5,657 4 9	.....	S. A. 8	Sripati Charan De	1,795 3 8	.....	196 14 0
1731	Pargana Moynachore, mahal Ankhua Purba.	1,001 7 2	.....	Residuary share excluding S. A. I.	Ganganarain Maity	500 11 7	.....	53 4 6
1884	Pargana Mujnamutha, mahal Nankar Bajapti.	2,130 9 0	.....	Residuary share excluding S. A. Nos. 1, 2, 4, 5, 6, 7.	Purna Chandra Mitra and others.	740 13 2	.....	163 5 1
1884	Ditto ditto ...	2,130 9 0	.....	S A. I	Kritarthamoyi and others ...	703 12 5	.....	154 0 0
2246	Pargana Sabang, mahal Mahar.	1,302 1 0	Entire ...	.....	Syed Matanath Ali and others	.....	83 8 0	.....
2247	Ditto ditto ...	1,445 9 0	Do. ...	.....	Sarat Chandra Jana and others.	.....	156 9 0	.....
2427	Pargana Sahapur, mahal Hasimpore.	1,014 2 10 with police.	Do. ...	.....	Girish Chandra Jana and others.	.....	110 12 6	.....
				Temporary-settled Estates, Part II.				
2884	Pargana Pataspore, mahal Mangolpore.	2,401 0 0	.....	Residuary share excluding S. A. No. 2.	Upendra Nandan Das Mohapatra.	2,016 2 6	.....	14 8 0

Midnapore Collectorate, Arrear Collection Department, the 16th August 1902. H. LUSON, Collector of Midnapore.

Notification.

NOTICE is hereby given, under sections 6 and 13, Act XI of 1859, that the undermentioned estates or shares of estates in the district of Dacca will be put up for sale at the Collector's office of that district on the 23rd September 1902 for arrears of revenue and other demands which by the Regulations and Acts in force are directed to be realised in the same manner as arrears of revenue.

When in columns 5, 7, and 9 of the appended statement it is stated that only a share is to be sold, a separate account is kept for such share and the other share or shares in the estate are excluded from the sale :—

Tauzi No.	Name of mahal and pargana.	Sadar jama of whole estate.	Whether the whole estate is to be sold.	If only a share is to be sold, specification of such share or shares.	Names of proprietors of property to be sold.	If only a share is to be sold, the sadar jama of such share.	If the whole estate is to be sold, the arrears due from it.	If only a share is to be sold, the arrears due from it.
1	2	3	4	5	6	7	8	9
3433	Pargana Khijirpur Gogchar Krokchar within char Bhedar.	Rs. A. P. 558 0 0	16 annas ...	.....	Lalit Mohan Rai ...	Rs. A. P. . .	Rs. A. P. 212 0 0	Rs. A. P. ... ..

Dacca Collectorate, the 19th August 1902. J. T. RANKIN, Collector of Dacca.

Notification A.

NOTICE is hereby given, under sections 6 and 13, Act XI of 1859, that the undermentioned estates and shares of estates in the district of Saran will be put up for sale at the office of the Collector of that district on the 22nd September 1902 at 11 A.M. for arrears of revenue and other demands which by law are realisable as arrears of land revenue.

When in columns 5, 7 and 9 of the appended statement it is stated that only a share is to be sold, it is to be understood that a separate account is kept for that share.

Tauzi No.	Name of mahal and pargana.	Sadar jama of whole estate.	Whether the whole estate is to be sold.	If only a share is to be sold, specification of such share or shares.	Names of proprietors of property to be sold.	If only a share is to be sold, the sadar jama of such share.	If the whole estate is to be sold, the arrears due from it.	If only a share is to be sold, the arrears due from it.
1	2	3	4	5	6	7	8	9
				Part I.		Rs. A. P.	Rs. A. P.	Rs. A. P.
78	Deopoor, pargana Bal	3,309 12 10	Entire ..	Nil	Babu Gulab Chand ...	.....	320 0 3	.....
								As.
394	Benut, pargana Bal ...	883 15 8		Ijmali— Benut ... ... 8 Mashantola ... ... 12 Rampoor ... ... 16 Birtimihdar Bhadaur ... ... 16 All other shares besides that specified will be excluded from sale.	Harihar Pd. and others	650 2 8	... .	2 15 3
								As. P.
2074	Batardeh, pargana Dangsi.	1,425 0 0	..	Ijmali— Bhagar Jallaur ... ... 8 0 Birsioha ... ... 2 0 Bhadeya ... ... 5 4 Kotwa ... ... 8 0 Bhadkuian ... ... 6 8 Panditpura ... ... 8 0 Dangsi ... ... 2 0 Bochea ... ... 8 0 Batardoh ... ... 2 8 Pipra ... ... 1 4 Bhagwar ... ... 6 8 Sorahia ... ... 2 0 Parsowna ... ... 8 0 Parsa ... ... 8 0 All other shares besides that specified will be excluded from sale.	Sarjoo Pd. Narain Singh, Siri Pd. Narain Singh and others.	661 8 7	.....	54 4 4
				Part II.				
2080	Doara Baghwar or Baghwar Doara, pargana Dangsi.	696 0 0	Entire ...	... ..	Babu Sheopertap Sahai and others.	... ..	0 7 0	.....
				Part I.				
						A. P. K. M. D. K. B. T.		
2492	Kerwakatsa, pargana Goa.	3,124 6 8		Ijmali— Kerwa ... .. 0 8 7 2 10 0 0 0 Parsa ... ... 0 7 8 10 0 0 0 0 Bajrahia ... 0 9 4 10 0 0 0 0 Katsakseopoor 8 8 0 0 0 0 0 0 Kumhaila ... 0 9 8 15 0 0 0 0 Rampcoratowli 12 6 0 0 0 0 0 0 Pearapoor ... 10 1 17 10 0 0 0 0 Siawa ... ... 6 0 7 10 0 0 0 0 Sarayabasant ... 9 4 10 0 0 0 0 0 Sarayarathnagar 10 2 17 10 0 0 0 0 Faridpur ... 4 8 5 0 0 0 0 0 Fatehpur ... 8 10 5 0 0 0 0 0 Ardewa ... ... 12 6 0 0 0 0 0 0 Akolhi ... ... 8 10 5 0 0 0 0 0 Usai ... ... 8 5 11 5 0 0 0 0 Galibpur ... 10 1 17 10 0 0 0 0 Chowrasi ... 8 10 5 0 0 0 0 0 Agahra ... ... 10 11 5 0 0 0 0 0 Achitpur ... 9 7 0 9 12 13 2 10 Ghurna ... 12 6 0 0 0 0 0 0 Chhapramahesh 8 10 5 0 0 0 0 0 Downgodhua ... 8 10 5 0 0 0 0 0 All other shares besides that specified will be excluded from sale.	Isar Sahai and others ...	1,834 1 2	... ..	112 6 2
						A. P. K.		
2612	Mithepoor pargana ...	747 11 8		Ijmali— Repura ... ... 9 0 0 Mithepoor ... ... 10 9 10 Sirsa *alias* Parsa ... ... 11 5 18 Bhualpoor ... ... 13 3 0 All other shares besides that specified will be excluded from sale.	Musamat Jagpati Kuar and others.	525 11 10	.....	13 5 7
								As.
3474/1	Gamhari, pargana Madhal.	4,218 13 0	...	Separate account No. 1— Gamhari Mathia ... ... 2 Hamidpur ... ... 2 Sanwalia ... ... 2 Kamalmarwa ... ... 1 Sitalpur paraya ... ... 2 Ghasigarora ... ... 1 Rewteh ... ... 2 Banskali ... ... 2 Khaira Azam ... ... 2 Dewkuti ... ... 2 Hakam ... ... 2 Sisai ... ... 2 Safiabad ... ... 2 Mangroochapra 2	Chitrkut Nath, Badri Nath and Rameshar Nath and others.	527 5 8	... ..	0 11 11

Tauzi No.	Name of mahal and pargana.	Sadar jama of whole estate.	Whether the whole estate is to be sold.	If only a share is to be sold, specification of such share or shares.	Names of proprietors of property to be sold.	If only a share is to be sold, the sadar jama of such share.	If the whole estate is to be sold, the arrears due from it.	If only a share is to be sold, the arrears due from it.
1	2	3	4	5	6	7	8	9
				As. Separate account No. 1—*concld.* Rahra ... ... 2 Rehuatal ... ... 2 Gaura ... . 2 Gauri ... ... 2 Sankarpoora ... . 2 Fakharpoora ... ... 2 Ramgadh ... ... 2 Bamoo ... ... 2 All other shares besides that specified will be excluded from sale.		Rs. A. P.	Rs. A. P.	S. A. P.
4397/9	Sheodiari, pargana Manjhi.	13,840 15 6	.....	A. Separate account No. 9— Sheodiari ... . 1 All other shares besides that specified will be excluded from sale.	Ba Lal Singh, through Musamat Pachrattan Kuar.	865 1 0	.. ...	216 4 0
4397/10	Ditto ...	13,840 15 6	.....	P. K. Separate account No. 10— Sheodiari ... ... 9 12 All other shares besides that specified will be excluded from sale.	Bhirgunath Singh and others.	692 0 9	.....	129 11 0

Saran Collectorate, the 18th August 1902.

P. G. ROGERS, *for* Collector.

Advertisement of Sale.

NOTICE is hereby given that the proprietary right of Government, as specified in the conditions of sale below, to the undermentioned estate, situate in the district of Khulna, will be put up to sale at the Khulna Collectorate on the 29th September 1902, corresponding to 13th Aswin 1309 B.S.

The purchasers will be subject to the following conditions of sale:—

Conditions of Sale.

1st.—The estate to be sold to the highest bidder above the upset price, which will be fixed by the Collector at the time of sale. The purchaser of this estate will be considered as the proprietor of the estate, and the entire proprietary right of Government in such estate will be transferred to him subject to the revenue fixed in perpetuity.

2nd.—The sale to be subject to existing leases and to the rights conferred by the settlement proceedings and by the laws in force, and purchasers to be bound to respect the rights of resident cultivators who have signed the schedule of assessment prepared by the revenue authorities.

3rd.—If the amount of purchase-money do not exceed Rs. 100, the whole amount to be paid down at once.

4th.—If the amount of purchase-money exceed Rs. 100, one-fourth of the amount of bid to be immediately deposited. If the balance be not paid by noon of the fifteenth day after the sale, reckoning the day of sale as one, or if that day be a close holiday, then by noon of the first succeeding office day, the sale is to be cancelled (the sum deposited being forfeited to Government), and the estate to be again put up to sale at the risk of the defaulting purchaser, after issue of advertisement, as in the case of original sale—

Number on the district roll.	Name of estate and pargana.	APPROXMIATE AREA—		Government revenue assessed.	REMARKS.
		In bighas.	In acres.		
1	2	3		4	5
		B. K. CH.	A. R. P.	Rs. A.	
944	Haridaskati, pargana Malui	1 13 0	0 2 13	1 2	

Collector's Office, Khulna, the 18th August 1902.

S. C. MUKERJEE, Collector.

NOTICE is hereby given, under sections 6 and 13, Act XI of 1859, that the undermentioned estate or share of estate in the district of Darbhanga will be put up for sale at the office of the Collector of that district on the 5th September 1902, corresponding with 17th Bhado 1309 Fasli, at 12 A.M. on Friday for arrears of revenue and other demands, which by law are realizable as arrears of land revenue.

When in columns 5, 7 and 9 of the appended statement it is stated that only a share is to be sold, it is to be understood that a separate account is kept for that share. All other shares besides that specified will be excluded from the sale.

Tauzi No.	Name of estate, thana or pargana.	Sadar jama of whole estate.	Whether the whole estate is to be sold.	If only a share is to be sold, specification of such share or shares.	Names of proprietors of property to be sold.	If only a share is to be sold, the sadar jama of such share.	If the whole estate is to be sold, the arrears due from it.	If only a share is to be sold, the share due from it.
1	2	3	4	5	6	7	8	9
11810	Ahiari, pargana Bharmara, thana Darbhanga.	Rs. A. P. 1,831 2 4	Whole .	.....	Lala Binda Prasad, Lala Shew Charan Lal, Lala Chedi Lal, Lala Sital Prasad, Lala Jagar Nath Prasad, &c.	.....	Rs. A. P. 457 11 9	.....

Darbhanga Collectorate, the 24th July 1902.

S. L. MADDOX, Collector.

Notification A.

NOTICE is hereby given, under sections 6 and 13, Act XI of 1859, that the undermentioned estates and shares of estates in the district of Chittagong will be put up for sale at the office of the Collector of that district on the 26th September 1902 at 12 A.M. for arrears of revenue and other demands which by law are realisable as arrears of land revenue.

When in columns 5, 7 and 9 of the appended statement it is stated that only a share is to be sold, it is to be understood that a separate account is kept for that share.

Tauzi No.	Name of mahal and pargana.	Sadar jama of whole estate.	Whether the whole estate is to be sold.	If only a share is to be sold, specification of such share or shares.	Names of proprietors of property to be sold.	If only a share is to be sold, the sadar jama of such share.	If the whole estate is to be sold, the arrears due from it.	If only a share is to be sold, the arrears due from it.
1	2	3	4	5	6	7	8	9
2093 2100 1512	Thana Hathazari, Taraf Krishna Kishore Kanungoe.	Rs. A. P. 645 6 7	Only a share will be sold.	Only share No. 1 and no other share will be sold.	Fazal Ahmed, Bazal Samad and others.	Rs. A. P 524 13 6	Rs. A. P.	Rs. A. P. 131 3 4

N.B.—The amount shown in column 9 represents the arrear due for kist ending 25th May 1903.

Chittagong, the 16th August 1902.

P. E. CAMMIADE, Offg. Collector.

Notification A.

NOTICE is hereby given, under sections 6 and 13, Act XI of 1859, that the undermentioned estates and shares of estates in the district of Hooghly will be put up for sale at the office of the Collector of that district on the 25th September 1902 at 12 noon for arrears of revenue and other demands which by law are realisable as arrears of land revenue.

When in columns 5, 7 and 9 of the appended statement it is stated that only a share is to be sold, it is to be understood that a separate account is kept for that share.

Tauzi No.	Name of mahal and pargana.	Sadar jama of whole estate.	Whether the whole estate is to be sold.	If only a share is to be sold, specification of such share or shares.	Names of proprietors of property to be sold.	If only a share is to be sold, the sadar jama of such share.	If the whole estate is to be sold, the arrears due from it.	If only a share is to be sold, the arrears due from it.
1	2	3	4	5	6	7	8	9
33	Mandalghat, pargana Mandalghat.	Rs. A. P. 2,23,423 3 8	.....	Residuary share consisting of 3a. 13g. 3c. 3kag 5½til share of the estate.	Manic Lal Seal and others	Rs. A. P. 51,616 8 6	Rs. A. P.	Rs. A. P. 477 13 10
62	Ramjangal, pargana Mandalghat.	19,342 4 9	.....	Residuary share consisting of 7a. 5g. share of the estate.	Amrita Lal Seal and others.	8,760 9 8	.....	1,138 4 8

Hooghly Collectorate, the 16th August 1902.

MAHESH CHANDRA SEN, Sale Deputy Collector.

Advertisement of Sale.

NOTICE is hereby given that the undermentioned plots of land, no longer required by Government, situated along the Assam Bengal Railway, in the district of Tippera, will be put up to sale at 12 o'clock on the 3rd day of October 1902, corresponding with 17th Assin (1309 Fusli) at the office of the Collector of Tippera.

The purchasers of the several plots of land will be subject to the following conditions:—

1st.—The purchasers will have no power to make any excavations on the land nearer than 15 feet from the railway fencing, or plough the lands closer than three feet from its foundation.

2nd.—If the amount of purchase-money does not exceed Rs. 100, the whole amount must be paid down at once.

3rd.—If the amount of purchase-money exceed Rs. 100, one-fourth of the amount must be immediately deposited. If the balance be not paid by noon of the fifteenth day after the sale, reckoning the day of sale as one, or if that day be a close holiday, then by noon of the first succeeding office day, the sale shall be cancelled, the sum deposited being forfeited to Government, and the lot again put up for sale at the risk of the defaulting purchaser after issue of advertisement as in the case of original sale.

4th.—The plots of land will be sold revenue-free to the highest bidders.

5th.—The purchasers shall be put in possession on receipt by the District Collector of the orders of the Board confirming the sale.

Consecutive lot No.	Name of district.	Pargana and mauza.	Number of mile on which land is situate.	Situated on which side of the railway.	Approximate area of lot in bighas and in acres.		Land excluded from sale from each lot.		Commencement and termination of lot.	Boundary of lot.
					B. K. C.	A. R. P.	Reasons for exclusion.	A. R. P.		
1	2	3	4	5	6		7		8	9
19	Tippera....	Pargana Mohar-kul, mauza Dharmapur.	At mile No. 95.	West of Railway line.	6 •6 2	2 0 13·5	.....	.....	Lot Nos. 19 to 26	(1) *North*—Comilla station yard. *South*—Level cross in Comilla station yard. *East*—Comilla Railway station. *West*—Mauza Dharmapur or District Board road.
20	Ditto ...	Ditto ...	Ditto	Ditto	1 2 12	0 1 20·2	.....	.....	Ditto ...	(2) *North*—Comilla station yard. *South*—District Board road. *East*— } Relinquished land. *West*— }
21	Ditto ...	Pargana ditto, mauza Badarpur.	At mile No. 97.	North of Railway line.	7 19 9	2 2 21·9	.....	.....	Ditto ...	(3) *North*—District Board road or embankment of Gumti river. *South*—Golapkha, Kadirboksh and mauza Badarpur. *East*—Homestead land and cultivated land of Golapkha and Kadirboksh. *West*—Railway line.
22	Ditto ...	Pargana Lauha-gar, mauza Ram Chandrapur.	At mile No. 110.	Ditto	23 6 10	7 2 34·1	.....	.....	Ditto ...	(4) *North*— } Ramchandrapur. *South*— } *East*—Railway line. *West*—Ramchandrapur.
23	Ditto ...	Ditto ...	Ditto	Ditto	18 1 2	5 3 35·1	.....	.....	Ditto ...	(5) *North*— } *South*— } Ramchandrapur. *East*— } *West*—Railway line.
24	Ditto ...	Pargana Homna-bad, mauza Kakaia.	At mile No. 5.	East of Railway line.	94 5 10	31 0 26·7	.....	.....	Ditto ...	(6) *North*—Mauza Kakaia. *South*—Railway line. *East*—Mauza Kakaia. *West*—Kurjan khal.
25	Ditto ...	Pargana Nun-nagar, mauza Nakhora.	At mile No. 114.	South of Railway line.	1 11 4	0 2 2·5	.....	.....	Ditto ...	(7) *North*—Nakhora and Railway line. *South*—Nakhora. *East*—Railway line. *West*—Nakhora.
26	Ditto ...	Pargana Lauha-gar, mauza Pa-chara.	At mile No. 106.	Noth of Railway line.	1 1 11	0 1 17·255	.....	.....	Ditto ...	(8) *North*—Asad Gani. *South*—Bank of tank. *East*—Nabab Ali. *West*—District Board road.

Comilla, the 12th August 1902.

H. W. P. SCROOPE, Collector.

NOTICE is hereby given, under sections 5 and 13, Act XI of 1859, that unless the arrears mentioned below are paid on or before the next latest date of payment, viz., the 28th September 1902, the undermentioned estates or shares of estates in the district of Muzaffarpur will be put up for sale at the office of the Collector of that district on the date to be fixed for the sale of the estates and shares in arrears of revenue for the kist of September 1902:—

Tauzi No.	Name of mahal and pargana.	Sadar jama of whole estate.	Whether the whole estate is to be sold.	If only a share is to be sold, specification of such share or shares.	Names of proprietors and property to be sold.	If only a share is to be sold, the sadar jama of such share.	If the whole estate is to be sold, the arrears due from it.	If only a share is to be sold, the arrears due from it.	Nature and amount of demands for which to be sold.
1	2	3	4	5	6	7	8	9	10
280	Jarung Vishnath Singh, pargana Barail.	Rs. A. P. 566 9 1	The whole	.....	Babu Dabi Prosad Singh and others.	Rs. A. P.	Rs. A. P. 35 5 9	Rs. A. P.	Rs. 35-5-9 on account of arrears of land revenue due for kist June 1902.
2153 R.S.	Abul Hassanpur Manraj, Chakia Gurjaul, pargana Bisara.	810 3 6	.....	Residuary share— As. G. C. K. D. R. Abul Hassanpur... 10 0 0 0 0 0 Tejaul Buzrug ... 9 0 0 0 0 0 Rampur Pauni ... 16 0 0 0 0 0 Pauni-Jairam ... 16 0 0 0 0 0 Barahroop ... 9 12 0 0 0 0 Kanti ... 9 12 0 0 0 0 Barahroop Baharam ... 16 0 0 0 0 0 Ghataro Chatterbhooj ... 9 0 0 0 0 0 Ghataro Gopi Singh ... 9 0 0 0 0 0 Bahloipur ... 16 0 0 0 0 0 Dharampur Jarung ... 9 0 0 0 0 0 Mohamadpur Rohua ... 16 0 0 0 0 0 Bhugwanpur Tand 13 4 0 0 0 0 Sherpur ... 13 4 0 0 0 0 Pertap Tand ... 5 17 1 1 0 0 Wafapur Banthoo 16 0 0 0 0 0 Rampur Banthoo 16 0 0 0 0 0 Bidhichundpur ... 16 0 0 0 0 0 Rangoputti ... 16 0 0 0 0 0 Chuk Mohamad Warris ... 13 4 0 0 0 0 Sinhwa Kalban ... 8 17 3 1 1 10	Rashihari Singh and others.	538 1 11	.....	268 5 8	Rs. 268-5-8 due on account of arrears of revenue for the kists of March and June 1902, i.e., Rs. 133-13-4 for kist March 1902 and Rs. 134-8-4 for kist June 1902.

Muzaffarpur Collectorate, the 27th August 1902.

E. V. LEVINGE, Collector.

[Sale Notification under Section 7, Act XI of 1859.]

Notification A.

NOTICE is hereby given, under sections 6 and 13, Act XI of 1859, that the undermentioned estates and shares of estates in the district of Patna will be put up for sale at the office of the Collector of that district on the 22nd September 1902 at 12 A.M. for arrears of revenue and other demands which by law are realisable as arrears of land revenue.

When in columns 5, 7 and 9 of the appended statement it is stated that only a share is to be sold, it is to be understood that a separate account is kept for that share.

Tauzi No.	Name of mahal and pargana.	Sadar jama of the whole estate.	Whether the whole estate is to be sold.	If only a share is to be sold, specification of such share or shares.	Names of proprietors of property to be sold.	If only a share is to be sold, the sadar jama of such share.	If the whole estate is to be sold, the arrears due from it.	If only a share is to be sold, the arrears due from it.
1	2	3	4	5	6	7	8	9
56	Damodarpur Beldha, pargana Pilich.	Rs. A. P. 4,468 5 9	.....	4a. 16d. ijmal ... ... All other shares than that specified will be excluded from sale.	Lalan Sahu, Lachhoo-man Sahu and others.	Rs. A. P. 1,340 6 1	Rs. A. P.	Rs. A. P. 947 1 8
109	Rampur Bedhna Nist, pargana Bhimpur.	998 8 0	.....	15a. 8d. 13k. 6b. 10p. 7r. ijmal. All other shares than that specified will be excluded from sale.	Kesho Lal Vogairah...	963 1 6	.....	9 5 10
220	Salampur Ajaipur, pargana Beswak.	641 1 1	Entire ...	.....	Jia Ram	.....	39 15 6	.....
227	Shahpur Augari, mauze Shahpur Augari Chandipur Maijra Sitalpur, pargana Beswak.	5,334 6 5	Do. ...	.....	Ikbal Ali Khan Vogairah.	.....	6 5 10	.....
760	Sham Manohar Singh Emadpur Sahra Batora, Khosropur ufrol, pargana Ghyaspur.	1,022 3 9	.....	Sahra Batora, 3a. 13d. 15k. 8b. 14p. 16r. 2t. 9 tilwasi 10 bat. Khosropur ufrol, 16a. ijmal. All other shares than that specified will be excluded from sale.	Shah Khane Zad Husain Vogairah. Balmakund Singh Vogairah.	512 13 0	.....	14 4 10

J. G. CUMMING, Collector.

INSOLVENT ESTATES.

QUARTERLY STATEMENT MADE UP TO 30TH SEPTEMBER 1901.

ESTATES.	Whole amount of receipts.	WHOLE DISBURSEMENTS.		Balance.	Portion of balance applicable to dividends now payable.	Net balance.	Probable outturn of the dependencies.
		Dividends paid.	Other payments.				
	Rs. A. P.	Rs. A. P.	Rs. A. P.	Rs. A. P.	Rs. A. P.	Rs. A. P.	
Alexander & Co. ...	2,91,087 1 9	2,32,428 3 10	48,899 13 8	9,759 0 3	8,954 5 1	804 11 2	Nothing further recoverable.
Adam, Scott & Co. ...	1,31,609 5 4	1,06,547 4 0	23,086 5 1	1,975 12 3	1,109 15 0	865 13 3	Ditto ditto.
Allen, Deffell & Co. ...	1,57,553 10 4	1,26,063 13 5	30,521 2 3	968 10 8	946 1 5	22 9 3	Ditto ditto.
Anderson & Co., William ...	2,678 8 1	.....	1,845 4 3	833 3 10	625 11 6	207 8 4	Ditto ditto.
Asiatic Marine Insurance Office ...	8,40,361 11 1	6,92,443 5 11	1,38,990 12 9	8,927 8 5	8,621 4 0	306 4 5	Ditto ditto.
Alexander Wallace & Co. ...	24,142 11 7	16,356 2 7	6,404 3 1	1,382 5 11	1,268 10 4	113 11 7	Ditto ditto.
Anstruthers & Co. ...	17,005 3 3	7,366 11 6	3,747 4 1	5,891 3 8	5,496 3 11	394 15 9	Ditto ditto.
Anderson, George ...	1,806 12 6	.....	953 9 3	853 3 3	733 0 2	120 3 1	Ditto ditto.
Atkinson & Co., W. L. ...	17,234 12 9	5,630 9 6	8,863 2 11	2,741 0 4	2,058 0 4	683 0 0	Ditto ditto.
Arrakie, J. G. ...	1,024 5 6	52 6 0	394 15 9	576 15 8	129 2 7	447 13 1	Ditto ditto.
Audhur Chunder Shaw ...	18,849 9 11	8,134 4 9	8,242 15 4	2,472 5 10	1,207 3 3	1,265 2 7	Ditto ditto.
Aycobe Hadjee Abdool Rohomon ...	11,461 10 3	7,959 6 6	2,088 9 11	1,413 9 10	1,299 3 10	114 6 0	Ditto ditto.
Anundo Mohun Dutt and another ...	3,739 2 3	530 1 1	2,540 9 5	668 7 9	668 7 9	.....	Ditto ditto.
Anderson, G. (2nd) ...	4,963 9 4	2,759 15 3	1,560 1 9	643 8 4	292 7 1	351 1 3	Ditto ditto.
Andrews, J. ...	1,939 8 5	950 10 0	348 5 8	640 8 9	45 3 3	595 5 6	Ditto ditto.
Albertini, Cesar (F. Acerboni & Co.) ...	20,143 7 1	15,348 8 6	2,086 13 1	2,708 1 6	147 3 9	2,560 13 9	Ditto ditto.
Adam Ahamed ...	7,545 1 7	5,330 4 5	1,296 2 3	918 10 11	918 10 11	.....	Ditto ditto.
Ashutosh Mookerjee ...	9,572 9 5	.....	7,958 7 3	1,614 2 2	.....	1,614 2 2	Outstandings: in course of recovery.
Abdool Gunny ...	1,802 11 0	.....	550 4 0	1,252 7 0	.....	1,252 7 0	Ditto ditto.
Balfour & Co. ...	5,61,316 3 6	3,04,469 3 11	2,55,181 14 1	1,665 2 1	713 10 2	951 7 11	Nothing further recoverable.
Boyd & Co. ...	30,673 14 3	10,773 10 4	13,425 1 11	6,475 2 0	6,364 3 4	110 14 8	Ditto ditto.
Bruce, Shand & Co. ...	8,36,536 3 5	4,96,777 1 0	3,32,316 3 0	7,442 15 5	6,618 1 2	824 14 3	Ditto ditto.
Bodry, John (1st) ...	1,705 7 1	79 1 11	547 6 0	1,076 15 2	582 1 8	496 13 6	Ditto ditto.
Bluett, James ...	873 0 0	40 0 11	222 14 2	610 0 11	610 0 11	.....	Ditto ditto.
Bhoobun Mohan Mitter ...	4,000 0 0	.....	2,163 7 9	1,836 8 3	1,794 12 6	41 11 9	Ditto ditto.
Baboo Lall Shaw and others ...	1,35,530 2 7	88,917 10 9	30,736 10 9	15,875 13 1	15,628 5 1	247 8 0	Ditto ditto.
Buldeo Dass (Buldeo Dass Chuttoorbhooj)	3,802 3 1	1,424 5 4	985 1 6	1,392 12 3	1,386 12 11	5 15 4	Ditto ditto.
Bhore Mull Gondaka ...	16,319 3 6	11,202 10 2	3,226 1 6	1,890 7 10	1,760 10 11	129 12 11	Ditto ditto.
Brunet Saliz and Latapie ...	15,235 0 0	8,047 9 5	5,625 0 5	1,562 6 2	1,445 10 8	116 11 6	Ditto ditto.
Bagott, W. N. ...	4,149 4 9	49 3 7	3,498 4 2	601 13 0	392 4 5	209 8 7	Ditto ditto.
Bodry, John (3rd) ...	4,425 4 6	1,112 3 5	2,384 6 10	928 10 3	642 13 0	285 13 3	Ditto ditto.

Besso Nath Mandel ...	2,200 4 7	......	......	2,200 4 7	......	2,200 4 7	Ditto	ditto.
Belletty, M. ...	6,180 0 0	1,024 13 10	116 13 10	538 4 4	370 9 10	167 10 6	Ditto	ditto.
Bhoobun Mohun Bannerjee and another	1,58,927 12 8	36,824 1 11	1,16,251 7 2	5,852 3 7	5,823 11 6	28 8 1	Ditto	ditto.
Bungshee Dhur Khettry (Nannoo Mull Khettry).	1,04,279 10 2	79,164 14 6	16,555 1 2	8,559 10 6	8,078 2 10	481 7 8	Ditto	ditto.
Bhola Nath Dass ...	8,100 0 0	29 11 2	2,449 11 7	620 9 3	524 5 11	96 3 4	Ditto	ditto.
Beer Chund Coondoo and another ..	2,201 8 3	642 5 2	968 9 6	590 9 7	590 9 7	......	Ditto	ditto.
Brewcester, C. C., and W. Nicholl (Wilson, Mackenzie & Co.).	794 0 10	......	......	794 0 10	......	794 0 10	Ditto	ditto.
Baker, F. W. (separate account) ...	2,337 15 3	1,010 14 10	123 9 0	1,203 7 5	1,157 14 6	45 8 11	Ditto	ditto.
Bheekum Chand Ratty ...	1,452 6 4	857 10 8	74 6 5	520 5 3	286 10 5	233 10 10	Ditto	ditto.
Benode Kanto Nathuck and another ...	562 13 6	......	30 15 2	531 14 4	......	531 14 4	Ditto	ditto.
Bungsheedhur Singania (Kriparam Sookdoyal).	2,849 2 6	76 4 11	1,661 8 10	1,111 4 9	1,018 2 11	93 1 10	Ditto	ditto.
Bhujendra Bhusun Chatterjee ...	3,580 10 3	893 4 8	629 15 10	2,057 5 9	725 5 9	1,332 0 4	Ditto	ditto.
Beer Nursing Dutt ...	92,826 10 5	7,701 8 10	77,898 10 0	7,226 7 7	2,318 11 2	4,907 12 5	Ditto	ditto.
Bhoyrubdan Boid and another (Bhoyrubdan Lab Chand).	7,705 11 10	5,085 3 9	902 10 0	1,717 14 1	359 12 9	1,358 1 4	Ditto	ditto.
Bucktwar Chand and Balkissen (Johur Mull Bucktwar Chand).	46,315 15 9	22,313 1 11	10,419 2 4	13,583 11 6	8,096 13 1	5,486 14 5	Ditto	ditto.
Brij Mohon Dobay ...	23,156 4 11	......	20,724 10 3	2,431 10 8	......	2,431 10 8	Ditto	ditto.
Bhoobun Mohun Dass ...	1,698 0 0	389 7 2	71 2 9	1,237 7 1	771 9 6	465 13 7	Ditto	ditto.
Bal Chand Neem Chand ...	3,894 9 0	......	1,172 4 6	2,722 4 6	......	2,722 4 6	Ditto	ditto.
Briggs, W. M. ...	1,360 13 0	114 0 0	37 1 11	1,209 11 1	365 15 0	843 12 1	Ditto	ditto.
Barrow, C. F. ...	6,479 7 4	1,928 5 2	293 10 0	4,257 8 2	3,419 4 0	838 4 2	Ditto	ditto.
Bowen, S. W. ...	1,581 7 0	......	......	1,581 7 0	......	1,581 7 0	Ditto	ditto.
Bal Chand Soorana ...	1,575 0 0	......	......	1,575 0 0	......	1,575 0 0	Ditto	ditto
Calvin & Co. ...	1,84,427 8 8	1,36,470 10 10	31,296 10 8	16,660 3 2	6,586 15 0	10,073 4 2	Ditto	ditto.
Cruttenden, Mackillop & Co. ...	99,959 11 1	72,895 6 5	20,263 11 4	6,800 9 4	5,743 13 4	1,056 12 0	Ditto	ditto.
Cockerell & Co. ...	17,19,733 5 0	3,86,102 12 10	13,26,584 4 11	7,046 3 3	6,701 5 10	344 13 5	Ditto	ditto.
Canoy Lall Burral and another ...	21,208 5 11	17,472 10 1	2,990 11 5	745 0 5	632 14 3	112 2 2	Ditto	ditto.
Crompton, G. F. ...	5,413 5 4	2,747 14 3	2,124 12 6	540 10 7	487 13 3	52 13 4	Ditto	ditto.
Cannyram, Choonee Lall ...	9,623 9 3	5,676 2 8	2,212 5 4	1,735 1 3	1,523 9 7	211 7 8	Ditto	ditto.
Charles, Nephew & Co. ...	5,15,143 12 9	3,99,340 6 4	98,146 12 8	17,656 9 9	15,958 7 10	1,698 1 11	Ditto	ditto.
Castello, M. G. ...	3,201 7 9	2,227 5 6	264 10 2	709 8 1	372 14 3	336 9 10	Ditto	ditto.
Carr, Robert ...	11,349 3 8	9,779 11 7	966 1 8	603 6 5	603 6 5	......	Ditto	ditto.
Cantopher, Robert ...	907 10 6	196 15 8	167 15 9	542 11 1	542 11 1	......	Ditto	ditto.
Child, W. C. ...	22,090 10 0	16,599 6 0	4,704 11 10	786 8 2	691 4 8	95 3 6	Ditto	ditto.
Christophoridi, C. ...	5,587 12 2	4,099 9 3	697 9 10	880 9 1	787 10 5	92 14 8	Ditto	ditto.
Cole, George (Perry & Co.) ...	3,018 10 4	1,310 12 1	937 1 11	770 12 4	770 12 4	......	Ditto	ditto.
Colville, Gilmore & Co. ...	1,77,067 4 8	5,281 4 11	88,601 4 8	83,184 11 1	74,761 10 10	8,423 0 3	Ditto	ditto.
Chutta Lall Sewprasad ...	44,733 11 0	18,597 9 9	19,610 14 10	5,774 7 0	5,632 1 11	142 5 1	Ditto	ditto.
Conti, G. A. ...	3,567 10 8	849 7 7	1,092 4 4	1,625 14 9	883 3 11	1,242 10 10	Ditto	ditto.
Cohen, S. E., and E. E. Cohen ...	1,806 3 0	280 1 10	1,012 9 4	513 7 10	317 12 5	195 11 5	Ditto	ditto.

Estates.	Whole amount of receipts.	Whole Disbursements.		Balance.	Portion of balance applicable to dividends now payable.	Net balance.	Probable outturn of the dependencies.
		Dividends paid.	Other payments.				
	Rs. A. P.	Rs. A. P.	Rs. A. P.	Rs. A. P.	Rs. A. P.	Rs. A. P.	
Chunder Kanto Shaw ...	43,972 1 6	6,315 7 7	36,831 6 6	825 3 5	825 3 5	.....	Nothing further recoverable.
Coleman, C.	1,716 8 0	986 7 5	119 3 2	610 13 5	610 13 5	.....	Ditto ditto.
Coverjee Bomanjee ...	985 6 6	157 11 7	59 6 8	768 4 3	690 2 6	78 1 9	Ditto ditto.
Collins, W. R. ...	2,581 6 8	.....	.....	2,581 6 8	.....	2,581 6 8	Ditto ditto.
Clark, A. M. (J. H. Fergusson & Co.) ...	23,198 8 2	12,913 0 9	7,606 9 11	2,678 13 6	1,482 12 5	1,196 1 1	Ditto ditto.
Croft, John Radcliffe and others (Croft, Wells & Co.).	9,022 11 6	.....	4,704 0 0	4,318 11 6	.....	4,318 11 6	Ditto ditto.
Cohen, J. A. ...	2,603 6 7	.....	1,374 11 7	1,228 11 0	1,160 3 1	68 7 11	Ditto ditto.
Chogmull Chatta Lall ...	3,237 12 6	490 3 10	1,493 3 4	1,254 5 4	445 5 8	808 15 8	Ditto ditto.
Chand Mull Jurwar Mull ...	9,658 11 6	5,974 10 4	2,457 2 2	1,227 15 0	803 8 10	424 6 2	Ditto ditto.
Choonee Lall Bond and another (Chogmull Maloom Chand).	6,620 14 3	3,196 7 0	1,736 2 0	1,688 5 3	1,435 4 7	253 0 8	Ditto ditto.
Choonee Lall Doodhuria ...	1,990 12 3	.....	60 15 3	1,929 13 0	.....	1,929 13 0	Ditto ditto
Cowie David and another (Calvin Cowie & Co.).	1,63,039 10 11	91,447 1 7	64,023 3 4	7,569 6 0	6,904 4 0	665 2 0	Ditto ditto.
Cohen, A. A. ...	1,666 2 0	.....	.....	1,666 2 0	.....	1,666 2 0	Ditto ditto.
Dickson, William ...	1,843 0 2	1,039 2 3	297 0 3	506 13 8	506 13 8	.....	Ditto ditto.
Dove, J. M. ...	12,991 0 0	10,202 12 8	2,214 0 8	574 2 8	316 11 4	257 7 4	Ditto ditto.
Dorret Brothers ...	2,164 9 6	34 7 7	1,470 1 6	660 0 5	660 0 5	.....	Ditto ditto.
DeSilva, John Emanuel ...	14,275 15 10	11,131 11 5	894 2 6	2,250 1 11	1,936 3 6	313 14 5	Ditto ditto.
DeSouza, John ...	1,334 0 3	.....	805 9 0	528 7 3	.....	528 7 3	Ditto ditto.
Dumat, Alfred ...	6,224 5 6	1,051 12 9	2,024 3 5	3,148 5 4	2,815 3 0	333 2 4	Ditto ditto.
Durrant, Edward ...	2,223 1 6	816 5 4	890 8 5	516 3 9	479 10 8	36 9 1	Ditto ditto.
Dennison, G. R. ...	29,828 14 7	26,967 6 10	1,607 6 4	1,254 1 5	787 0 0	467 1 5	Ditto ditto.
Duff, David ...	2,137 12 9	1,041 8 5	489 15 9	606 4 7	483 9 4	122 11 3	Ditto ditto.
Deno Nath De ...	12,218 11 11	7,804 8 7	2,315 6 4	2,098 13 0	1,631 1 4	467 11 8	Ditto ditto.
Dwarka Nath Mitter ...	5,938 12 0	731 10 10	4,641 13 5	565 3 9	447 8 9	117 11 0	Ditto ditto.
Deno Nath Paul ...	834 4 3	.....	119 12 9	714 7 6	.....	714 7 6	Ditto ditto.
Damoodur Dass ...	4,018 15 9	1,715 1 4	999 14 6	1,303 15 11	1,160 13 4	143 2 7	Ditto ditto.
Debrunner, Julius ...	65,912 4 7	58,106 7 4	7,188 1 7	617 4 8	491 5 3	126 6 5	Ditto ditto.
Doyal Chand Pyne and others ...	54,590 3 0	174 8 0	52,107 10 5	2,308 0 7	.....	2,308 0 7	Ditto ditto.
Dawood Khan Esabhoy ...	1,797 3 9	31 11 4	1,238 4 7	527 8 10	190 5 0	337 3 10	Ditto ditto.
Debsarain Bysack and another ...	5,691 14 6	3,385 4 9	1,447 4 7	859 5 2	859 5 2	.....	Ditto ditto.
DeSantos, R. J. ...	2,050 7 2	795 0 0	649 1 5	606 5 9	3 11 8	602 10 1	Ditto ditto.

Duggan, A. ...	2,400 0 0	531 7 9	123 11 1	1,744 13 2	1,679 14 5	64 14 9	Ditto	ditto.
Dwarka Nath Daw and another ...	7,866 9 6	4,736 7 9	1,980 12 10	1,149 4 11	904 10 3	244 10 8	Ditto	ditto.
Dhurrum Chand (Golab Chand Dhurrum Chand).	22,338 2 10	15,042 4 3	3,184 10 7	4,111 4 0	2,697 3 11	1,414 0 1	Ditto	ditto.
Dover, M. ...	3,465 10 9	250 0 0	1,439 9 1	1,776 1 8	1,393 15 1	382 2 7	Ditto	ditto.
Dhattry Coomar Shaw ...	8,307 9 7	3,270 8 3	1,725 13 0	3,811 4 4	1,204 0 6	2,107 2 10	Ditto	ditto.
Durham, J. R. L. ...	600 0 0	......	40 0 3	559 15 9	537 13 0	22 2 9	Ditto	ditto.
Duraut, W. E. ...	3,253 3 9	......	1,144 14 0	2,108 5 9	......	2,108 5 9	Ditto	ditto.
Debendro Nath Chander (separate account)	2,514 14 10	......	......	2,514 14 10	......	2,514 14 10	Ditto	ditto.
Debendro Nath Chunder and another (C. D. Mongas & Co.).	1,012 14 0	......	310 7 6	702 6 6	......	702 6 6	Ditto	ditto.
Ewing, Aird and Anderson ...	3,11,323 1 8	59,611 6 10	2,42,032 15 9	9,678 11 1	9,516 3 7	162 7 6	Ditto	ditto.
Ellias, M. B. ...	7,283 13 6	3,428 10 7	1,263 15 10	2,541 3 1	2,218 0 3	323 2 10	Ditto	ditto.
Espino, Manuel Deb ...	3,800 1 3	1,419 8 11	1,298 6 11	1,082 1 5	935 15 7	146 1 10	Ditto	ditto.
Eagleton, F. A. ...	3,653 3 6	72 11 2	2,841 4 4	739 4 0	446 0 1	293 3 11	Ditto	ditto.
Emmett, Chambers ...	23,491 8 3	7,305 15 2	13,092 11 0	3,092 14 1	3,075 12 0	17 2 1	Ditto	ditto.
Fergusson & Co. ...	1,96,005 7 4	1,48,653 6 2	33,097 7 10	14,254 9 4	11,828 3 11	2,426 5 5	Ditto	ditto.
Fergusson Brothers ...	1,47,924 5 4	68,637 12 4	75,113 15 2	4,172 9 10	3,761 0 8	411 9 2	Ditto	ditto.
Foster, Rogers & Co. ...	6,376 9 10	857 3 7	2,294 7 11	3,224 14 4	2,542 11 8	682 2 8	Ditto	ditto.
Fabian, E. D. ...	776 10 0	263 3 3	......	513 6 9	......	513 6 9	Ditto	ditto.
Ferris, G. R. ...	2,650 0 0	67 7 6	813 2 3	1,769 6 3	1,292 1 6	477 4 9	Ditto	ditto.
Fanshaw, R. F. ...	876 0 10	176 8 6	96 15 1	602 9 3	425 4 7	177 4 8	Ditto	ditto.
Fornaro, C. (Fornaro and Huni) ...	27,288 4 3	17,381 1 4	9,001 15 7	905 3 4	453 12 4	451 7 0	Ditto	ditto.
Forbes, H. T. ...	3,000 0 0	497 8 0	1,248 15 7	1,253 8 5	21 8 0	1,232 0 5	Ditto	ditto.
Freck, D. ...	504 10 6	......	......	504 10 6	......	504 10 6	Ditto	ditto.
Floyd, E. M. ...	614 0 9	......	......	614 0 9	......	614 0 9	Ditto	ditto.
Gilmore & Co. ..	47,267 5 4	23,186 11 8	19,717 10 7	4,362 15 1	......	4,362 15 1	Ditto	ditto.
Griffiths, Curtis & Co. ...	49,784 9 8	23,262 15 3	19,201 1 0	7,320 9 5	6,991 13 5	328 12 0	Ditto	ditto.
Gordon, Stewart & Co. ...	78,183 10 4	39,924 6 8	35,568 12 4	2,690 7 4	2,632 0 10	58 6 6	Ditto	ditto.
Gubboy, A. J. ...	9,055 7 0	6,088 9 2	2,095 4 0	891 9 10	565 5 11	326 3 11	Ditto	ditto.
Gocool Doss Soonderjee ...	18,266 14 1	11,879 7 1	5,760 12 11	626 10 1	584 4 8	42 5 5	Ditto	ditto.
Golaub Chand Hem Chand ...	1,586 2 0	......	200 9 0	1,385 9 0	......	1,385 9 0	Ditto	ditto.
Gordon, J. G. ...	570 0 0	......	76 2 1	493 13 11	493 13 11	......	Ditto	ditto.
Goberdhone Muilick ...	2,869 14 9	1,371 10 5	963 12 4	545 8 0	473 12 3	71 11 9	Ditto	ditto.
Golam Hossain Virjee ...	1,26,756 14 4	40,928 6 8	85,314 2 4	514 5 4	318 1 0	196 4 4	Ditto	ditto.
Ghose & Co., R. G. ...	29,911 1 2	21,218 2 4	7,954 3 8	738 11 2	536 2 0	202 9 2	Ditto	ditto.
Gregory, M. ...	17,186 2 5	12,174 13 6	4,154 14 4	856 6 7	717 5 5	139 1 2	Ditto	ditto.
Ghaseeram ...	38,350 5 10	10,535 5 6	25,967 15 3	1,847 1 1	1,231 11 2	615 5 11	Ditto	ditto.
Gasper, N. M. ...	7,010 0 9	4,872 0 8	657 12 0	1,480 4 1	1,188 9 1	291 11 0	Ditto	ditto.
Gilmour, J. A. G. ...	512 8 0	......	......	512 8 0	......	512 8 0	Ditto	ditto.
Gubboy, E. S. ...	53,783 3 0	17,176 15 8	36,070 3 1	536 0 3	432 14 9	103 1 6	Ditto	ditto.
Greedhary Lall Kanoy Lall ...	26,621 12 4	15,961 3 1	3,418 3 4	7,242 5 11	7,242 5 11	......	Ditto	ditto.
Gopal Chunder Bose ...	3,891 0 0	2,267 1 4	876 10 0	747 4 8	535 8 6	211 12 2	Ditto	ditto.
Gobin Chand Doogur and Setab Chand (Nunsee Inder Chand).	1,07,816 2 7	59,539 6 4	41,217 9 11	7,059 2 4	7,059 2 4	......	Ditto	ditto.

Estate.	Whole amount of receipts.	Whole Disbursements.		Balance.	Portion of balance applicable to dividends now payable.	Net balance.	Probable outturn of the dependencies.
		Dividends paid.	Other payments.				
	Rs. A. P.	Rs. A. P.	Rs. A. P.	Rs. A. P.	Rs. A. P.	Rs. A. P.	
Gray, Walter and another (Robert and Charriol).	3,14,768 4 0	2,09,594 14 1	42,148 3 10	63,025 2 1	54,570 0 10	8,455 1 3	Nothing further recoverable.
Grish Chunder Marrick and others ...	13,956 0 5	5,818 11 2	5,481 2 2	2,656 3 1	1,776 13 7	879 5 6	Ditto ditto.
Gopal Chunder Rage ...	2,834 15 3	1,516 0 3	813 12 3	505 2 9	505 2 9	.....	Ditto ditto.
Gopal Chunder Shaw ...	25,446 12 9	14,914 4 3	10,224 4 3	308 4 3	308 4 3	.. ..	Ditto ditto.
Greedharee Lall Sadkhan and Cally Churn Sadkhan.	6,246 6 0	400 9 6	4,991 13 2	853 15 4	374 1 3	479 14 1	Ditto ditto.
Gosto Behary Seal ...	34,539 14 3	13,925 9 11	19,941 2 7	673 1 9	558 9 10	114 7 11	Ditto ditto.
Gopee Kanto Sen ...	986 14 1	.....	358 6 0	628 8 1	.....	628 8 1	Ditto ditto.
Gobindram and another ...	7,414 13 3	4,321 11 7	1,957 10 11	1,135 6 9	1,135 6 9	.....	Ditto ditto.
Gobin Dass and another ...	2,048 13 9	60 2 2	1,270 14 1	717 13 6	575 3 7	142 9 11	Ditto ditto.
Golabroy & another (Kally Sahoe Golabroy)	13,975 10 11	7,941 10 1	3,102 8 0	2,931 8 10	2,735 0 4	196 8 6	Ditto ditto.
Ghunesham Chandgotia (Juggernath Sirdar Mull).	24,599 6 1	6,377 6 11	3,346 6 5	14,875 8 9	4,127 3 8	10,748 5 1	Ditto ditto.
Gungaram Domany ...	2,183 2 9	245 6 4	1,253 13 8	683 14 9	263 5 11	420 8 10	Ditto ditto.
Gobindas Domany ...	14,329 10 9	1,319 1 8	12,383 12 4	626 12 9	230 15 4	395 13 5	Ditto ditto.
Griffiths, O. B. (W. Moran & Co.) ...	4,84,619 15 9	1,86,077 2 3	2,25,460 11 7	73,082 2 0	2,360 0 10	70,722 1 2	Ditto ditto.
Griffiths, O. B. (separate account) ...	11,820 7 0	6,861 10 9	356 13 4	4,601 14 11	.....	4,601 14 11	Ditto ditto.
Girindra Nath Dass ...	17,035 2 7	.....	11,984 2 10	5,050 15 11	.....	5,050 15 11	Ditto ditto.
Gopal Dass Mukerjee ...	635 12 6	.....	104 2 8	331 9 10	.....	531 9 10	Ditto ditto.
Gouri Dutt Mooraly Dhur ...	3,601 13 6	.....	1,861 8 6	1,750 5 0	.....	1,750 5 0	Ditto ditto.
Gungadhur and others ...	535 2 4	.. ...	135 2 4	400 0 0	.....	400 0 0	Ditto ditto.
Hurry, W. C. ...	2,763 9 2	.....	1,937 14 8	825 10 6	.....	825 10 6	Ditto ditto.
Hoffmann & Co. ...	25,170 12 5	6,933 13 3	17,650 8 0	586 7 2	356 3 4	230 3 10	Ditto ditto.
Hughesdon Brothers ...	2,44,226 5 7	39,290 4 8	2,04,248 13 9	687 3 2	542 5 9	144 13 5	Ditto ditto.
Hudson, Nathaniel ...	2,225 11 3	655 5 6	461 2 1	1,109 3 8	936 15 2	172 4 6	Ditto ditto.
Hoppe, William ...	1,346 8 6	2 0 0	672 1 1	672 7 5	613 3 1	59 4 4	Ditto ditto.
Huffnagle & Co., Charles ...	1,320 4 7	74 9 3	342 4 1	903 7 3	821 11 2	81 12 1	Ditto ditto.
Heeralall Hunnuntoram ...	752 14 3	.....	61 0 0	691 14 3	.....	691 14 3	Ditto ditto.
Halloway, William ...	1,055 11 11	76 8 8	324 8 7	654 10 8	614 10 6	40 0 2	Ditto ditto.
Honigberger, William ...	1,001 5 6	.....	344 0 0	657 5 6	.....	657 5 6	Ditto ditto.
Hanlon, E. ...	2,069 9 0	152 2 2	1,191 9 4	725 13 6	725 13 6	.....	Ditto ditto.
Howard Brothers ...	10,421 9 10	6,168 12 7	3,394 13 6	857 15 9	630 5 0	227 10 9	Ditto ditto.
Hill, James (Berham, Hill & Co.) ...	32,114 9 9	17,374 4 0	10,861 5 8	3,879 0 1	3,489 8 4	389 7 9	Ditto ditto.
Hurry Narain Khettry ...	10,178 5 9	4,209 9 3	3,808 13 1	2,159 15 5	2,095 4 6	64 10 11	Ditto ditto.
Huckting & Co., B. H. ...	4,872 5 3	2,018 15 3	1,846 12 9	1,006 9 3	939 13 7	66 11 8	Ditto ditto.
Hutcheson, J. H. (L. W. Toulmin & Co.)	4,326 0 3	2,036 15 8	507 9 0	1,781 7 7	1,442 7 11	338 15 8	Ditto ditto.

Heera Lall (Heera Lall, Munnoo Lall) ...	19,704 0 3	8,519 10 5	7,122 11 3	4,061 10 7	4,061 10 7	......	Ditto	ditto.
Hubbard, C. E. ...	4,154 2 8	2,265 9 3	698 0 2	1,190 9 3	1,190 9 3	......	Ditto	ditto.
Heera Lall Doodhooriah ...	2,965 14 3	1,498 4 4	357 4 10	1,110 5 1	395 1 10	715 3 3	Ditto	ditto.
Hay, William (Stuart & Co.) ...	1,999 10 3	......	1,002 3 9	997 6 6	......	997 6 6	Ditto	ditto.
Heeranund (Budder Mull Heeranund) ...	1,212 15 3	607 15 1	88 2 1	516 14 1	442 3 11	74 10 2	Ditto	ditto.
Hurro Nauth Mozumdar and others ...	7,700 0 0	3,516 2 0	2,306 7 5	1,877 6 7	1,877 6 7	......	Ditto	ditto.
Hadjee Hidiatoollah and others ...	1,25,835 9 8	1,01,399 1 3	17,809 4 8	6,627 3 9	6,584 15 6	42 4 3	Ditto	ditto.
Hurruck Chand and Johoory Mull (Kanyelall Hurruck Chand).	12,671 6 0*	11,277 7 0	753 15 4	639 15 8	162 4 4	477 11 4	Ditto	ditto.
Hadjee Noor Mahomed Jackeriah ...	1,68,850 9 4	1,08,717 1 0	50,944 7 2	9,189 1 2	4,771 6 7	4,417 10 7	Ditto	ditto.
Heins, Geo. (C. Gould & Co.) ...	12,502 2 11	8,061 15 0	3,726 2 0	714 1 11	579 14 4	134 3 7	Ditto	ditto.
Heera Lall Addy ...	6,132 1 10	......	541 8 10	5,590 9 0	......	5,590 9 0	Ditto	ditto.
Hogg, Thos. (Beak & Co.) ...	1,238 13 0	......	6 12 0	1,232 1 0	......	1,232 1 0	Ditto	ditto.
Hurro Nath Shaw ...	20,937 1 7	9,878 1 6	5,592 12 11	5,466 3 2	1,445 0 0	4,021 3 2	Ditto	ditto.
Hura Lall Lahooty ...	2,594 14 0	590 2 8	1,572 0 4	432 11 0	235 4 0	197 7 0	Ditto	ditto.
Hadji Sallay Mahomed Ellias ...	2,341 4 1	1,320 4 8	128 12 3	892 3 2	730 2 7	162 0 7	Ditto	ditto.
Herbert, W. J. E. ...	1,200 0 0	346 8 11	68 10 7	784 12 6	764 3 9	20 8 9	Ditto	ditto.
Hurry Churn Dey, No. 2 ...	1,633 0 9	24 13 2	177 2 6	1,431 1 1	1,029 12 11	401 4 2	Ditto	ditto.
Issur Chunder Mill ...	8,546 1 6	506 12 3	6,175 1 7	1,864 3 8	1,864 3 8	......	Ditto	ditto.
Issen Chunder Sen ...	12,037 10 9	5,835 13 1	5,633 6 0	568 7 8	568 7 8	......	Ditto	ditto.
Issur Chunder Sen and another ..	681 14 9	23 7 1	101 0 2	507 7 6	507 7 6	......	Ditto	ditto.
Issur Dass Jugger Nath ...	75,994 14 11	61,411 12 7	11,124 12 9	3,458 5 7	1,604 6 6	1,853 15 1	Ditto	ditto.
Issory Prosad and another ...	664 7 0	......	7 10 6	656 12 6	......	656 12 6	Ditto	ditto.
Jansen & Co. ...	20,002 10 9	139 11 5	15,872 5 0	3,990 10 4	3,766 5 1	224 5 3	Ditto	ditto.
Juggessor Laha ..	34,888 4 1	16,701 4 2	15,519 2 4	2,167 13 7	1,851 6 1	316 7 6	Ditto	ditto.
Jordon, J. S. ..	5,876 8 0	3,582 9 6	984 15 5	808 15 1	545 0 7	263 14 6	Ditto	ditto.
Juggunpersad ...	960 8 9	......	223 9 0	736 15 9	......	736 15 9	Ditto	ditto.
Jacob, Charles ..	933 8 0	......	415 13 4	517 10 8	454 6 7	63 4 1	Ditto	ditto.
Jadub Chunder Seal ..	2,094 6 7	374 1 10	907 2 9	813 2 0	580 12 8	232 5 4	Ditto	ditto.
Juddah, S. E. ...	2,186 15 0	......	1,450 4 7	736 10 5	643 2 11	93 7 6	Ditto	ditto.
Johur Lall Mookim ...	1,656 0 0	648 15 0	262 4 7	744 12 5	373 13 9	370 14 8	Ditto	ditto.
Joakim, M. C. ...	7,764 15 3	4,223 8 11	2,422 12 5	1,108 9 11	838 9 7	270 0 4	Ditto	ditto.
Jaitroop Chooney Lall ...	8,292 7 2	5,458 4 10	2,081 8 11	752 9 5	752 9 5	......	Ditto	ditto.
Joogul Kissore Sew Lall Futteh Chand ...	9,544 8 6	5,950 3 1	2,262 11 9	1,331 9 8	1,051 7 2	280 2 6	Ditto	ditto.
Jogendra Nauth Cowar ...	5,958 0 0	1,391 15 3	3,577 14 3	988 2 6	806 0 9	182 1 9	Ditto	ditto.
JoresMull Beganny aud another ...	918 15 6	......	71 8 0	847 7 6	......	847 7 6	Ditto	ditto.
Jeebun Coomari Bibee ...	1,46,826 1 5	94,529 15 5	29,419 5 5	22,876 12 7	13,353 5 9	9,523 6 10	Ditto	ditto.
Johury Lall Paul and another ...	86,142 3 8	41,828 6 3	30,525 7 10	13,788 5 7	11,976 6 6	1,811 15 1	Ditto	ditto.
Jodu Nath Dey and another ...	2,479 3 9	311 14 10	1,807 10 1	359 10 10	325 14 0	33 12 10	Ditto	ditto.
Jumno Dass ...	3,315 4 6	1,050 11 3	1,516 5 1	748 4 2	713 7 8	34 12 6	Ditto	ditto.
Jewanram and another ...	39,704 3 5	24,616 10 6	9,168 0 9	5,919 8 2	266 14 6	5,652 9 8	Ditto	ditto.
Kemp, H. C. (T. Hyde, Gardiner & Co.)	33,765 12 9	27,374 0 2	6,817 5 1	574 7 6	135 0 4	439 7 2	Ditto	ditto.
Khan Mahomed Dhurrumsee ...	55,247 9 1	83,008 1 8	11,149 7 7	11,089 15 10	1,312 7 6	9,777 8 4	Ditto	ditto.
Kissory Mohun Chunder ...	3,300 0 0	2,025 2 4	269 4 2	1,005 9 6	590 11 9	414 13 9	Ditto	ditto.

Estates.	Whole amount of receipts.	Whole Disbursements.		Balance.	Portion of balance applicable to dividends now payable.	Net balance.	Probable outturn of the dependencies
		Dividends paid.	Other payments.				
	Rs. A. P.	Rs. A. P.	Rs. A. P.	Rs. A. P.	Rs. A. P.	Rs. A. P.	
Kally Dass Dass and others ..	73,719 13 5	22,069 12 6	46,591 2 0	5,058 14 11	2,359 4 2	2,699 10 9	Nothing further recoverable.
Kullianjee Soonderjee (Soonderjee, Walljee & Co.).	12,444 6 0	2,351 3 3	6,936 8 0	3,156 10 9	3,093 13 10	62 12 11	Ditto ditto.
Khetter Mohun Chatterjee ...	2,371 8 9	.....	1,201 0 5	1,170 8 4	... .	1,170 8 4	Ditto ditto.
Kelly, H. ...	6,800 9 3	4,090 4 11	2,136 11 5	573 8 11	495 2 4	78 6 7	Ditto ditto.
Kemp, H. C. ...	2,469 15 10	168 12 6	436 2 5	1,865 0 11	1,600 0 0	265 0 11	Ditto ditto.
Kissen Chand Galeecha ...	2,43,271 1 11	1,38,446 8 4	96,486 11 0	8,337 14 7	5,641 11 10	2,696 2 9	Ditto ditto.
Kally Churn Roy ...	510 0 0	.....	4 0 0	506 0 0	.....	506 0 0	Ditto ditto.
Khetter Mohun Dass ...	1,133 8 5	.....	456 2 0	677 6 5	.....	677 6 5	Ditto ditto.
Kally Prasanna Bhattacherjee ...	2,327 11 0	.....	796 7 10	1,531 3 2	.....	1,531 3 2	Ditto ditto.
Keyser Shahebzada Mohamed ...	5,925 0 0	4,687 12 10	564 8 11	672 10 3	662 5 0	10 5 3	Ditto ditto.
Kasim Arif Bham ...	796 9 3	.....	257 8 0	539 1 3	... ..	539 1 3	Ditto ditto.
Kirtybas Paul and another (Annoda Prasad Banerjee and others).	3,976 9 3	.....	2,640 7 7	1,336 1 8	.....	1,336 1 8	Ditto ditto.
Kally Churn Ghose ...	9,432 9 3	4,998 6 1	3,120 12 9	1,313 6 5	744 8 3	568 14 2	Ditto ditto.
Koylas Chunder Sreemany and others ...	43,215 8 5	12,468 6 4	29,651 8 7	1,095 9 6	783 8 0	312 1 6	Ditto ditto.
King, Loraine ...	8,268 1 11	6,657 1 11	777 3 6	833 12 6	667 11 3	166 1 3	Ditto ditto.
Krieg & Co. ...	4,858 9 2	2,190 2 9	1,186 9 8	1,481 12 9	308 5 7	1,173 7 2	Ditto ditto.
Kallypado Nundy ...	660 12 3	.....	139 9 0	521 3 3	.....	521 3 3	Ditto ditto.
Kissory Chand Sheremull ...	5,756 10 5	2,016 3 1	2,180 1 7	1,559 5 9	1,210 2 9	350 3 0	Ditto ditto.
Kalooram Behaniwallah ...	1,740 7 3	113 3 3	860 9 11	766 10 1	766 10 1	.....	Ditto ditto.
Kapp, F. ...	942 13 10	.....	428 14 0	513 15 10	. ....	513 15 10	Ditto ditto.
Kristo Lall Dhur ...	1,160 14 0	447 10 8	81 12 9	631 6 7	631 6 7	.....	Ditto ditto.
Kashi Prosaud Luchmenarain ...	2,750 0 0	.. ...	.....	2,750 0 0	.....	2,750 0 0	Ditto ditto.
Kanhya Lall Daga ...	5,011 12 1	.....	315 5 9	4,696 6 4	.....	4,696 6 4	Ditto ditto.
Kalooram Heerawat (Heera Lall Sohun Lall).	84,694 14 11	... ..	1,165 14 2	83,529 0 9	.....	83,529 0 9	Ditto ditto.
Khodabux Mullick ...	4,612 8 6	.....	475 12 6	4,136 12 0	.....	4,136 12 0	Ditto ditto.
Lyall, Mathewson & Co. ...	3,68,485 13 8	2,81,882 10 8	84,883 12 0	1,719 7 0	1,285 5 1	434 1 11	Ditto ditto.
Larpent, Saunders & Co. ...	80,893 0 4	42,900 8 0	22,836 4 7	15,156 3 9	12,631 12 0	2,524 7 9	Ditto ditto.
Larmour, F. D. A. (separate account) ...	1,170 8 0	.....	.....	1,170 8 0	.....	1,170 8 0	Ditto ditto.
Langlois & Co. ...	33,718 2 8	1,620 6 4	23,592 8 7	8,505 3 9	8,170 3 9	335 0 0	Ditto ditto.
Letourneux, Labadie & Co. ...	7,483 10 3	1,098 13 8	5,463 14 7	920 14 0	538 7 3	382 6 9	Ditto ditto.
Luke Hamill & Co. ...	6,527 12 4	595 0 8	2,343 0 4	3,589 11 4	3,244 15 2	344 12 2	Ditto ditto.
Latapie, E. D. (2nd) ...	3,982 6 2	12 0 2	3,079 2 10	891 3 2	795 10 5	95 8 9	Ditto ditto.
Landeman, J. V. ...	1,008 10 5	234 3 6	243 15 10	530 7 1	480 12 4	49 10 9	Ditto ditto.

Lindsay, D. B. ...	1,430 3 0	......	557 4 0	872 15 0	......	872 15 0	Ditto	ditto.
Ledlie, A. H. (2nd) ...	1,654 8 7	180 6 6	658 12 11	815 5 2	52 8 2	762 13 0	Ditto	ditto.
Lutchmenarain Khettry ...	1,726 9 9	429 2 0	617 3 6	680 4 3	411 14 8	268 5 7	Ditto	ditto.
Langlois, J. P. ..	1,448 12 0	......	532 0 0	916 12 0	......	916 12 0	Ditto	ditto.
Loke Nath Shaw ...	8,323 8 6	5,175 6 2	2,494 13 6	653 4 10	653 4 10	... ..	Ditto	ditto.
Latapie, E. D., & Co. ...	2,444 10 6	286 6 6	487 6 0	1,670 14 0	1,557 12 4	113 1 8	Ditto	ditto.
Leisk, A. H. S. (2nd) ...	885 8 11	143 0 0	69 0 4	673 8 7	200 0 0	473 8 7	Ditto	ditto.
Linjeebhoy Dhunjeebhoy ...	4,781 8 5	2,836 15 7	992 9 8	951 15 2	951 15 2	... ..	Ditto	ditto.
Lyall, R. A., and another (Lyall, Rennie & Co.).	3,60,219 2 3	3,06,074 15 5	50,755 7 1	3,388 11 9	2,712 7 11	676 3 10	Ditto	ditto.
Leitch, J. K. (Kerr, Leitch & Co.) ...	1,853 3 0	588 2 9	520 14 6	744 1 9	51 13 3	692 4 6	Ditto	ditto.
Larmour, C. F., and another (C. Lazarus & Co.).	6,750 8 5	......	5,735 4 3	1,015 4 2	......	1,015 4 2	Ditto	ditto.
Leozander & Co. ...	37,331 4 11	30,200 7 9	5,639 10 3	1,491 2 11	905 15 4	585 3 7	Ditto	ditto.
Lehzen, E. F. W. (Marquarh, Lehzen & Co.).	17,282 10 0	12,483 10 5	3,369 13 3	1,429 2 4	312 10 3	1,116 8 1	Ditto	ditto.
Lekram Buldeo Dass ...	14,468 5 3	8,596 1 5	3,680 7 7	2,191 12 3	603 12 7	1,587 15 8	Ditto	ditto.
Larmour, C. F. (separate account) ...	2,822 12 2	......	25 6 6	2,797 5 8	......	2,797 5 8	Ditto	ditto.
Leckie, Thomas ...	1,010 1 6	......	171 8 0	838 9 6	......	838 9 6	Ditto	ditto.
Mackintosh & Co. ..	2,28,494 11 9	1,24,788 3 2	77,432 6 5	26,274 2 4	24,413 1 2	1,861 1 2	Ditto	ditto.
Macleod, Fagan & Co. ..	17,631 7 7	6,841 8 1	10,248 13 1	541 2 5	8 6 7	532 11 10	Ditto	ditto.
Macgregor, Hunter & Co. ...	10,719 11 10	......	9,875 11 3	844 0 7	......	844 0 7	Ditto	ditto.
Mackey & Co., D. C. ...	1,17,362 7 8	58,372 14 3	41,916 2 8	17,073 6 9	17,064 9 3	8 13 6	Ditto	ditto.
Minto & Co., William ...	9,560 5 4	3,988 0 5	2,759 2 7	2,863 2 4	2,863 2 4	.. ...	Ditto	ditto.
Martin, Pillan & Co. ...	96,154 3 7	19,123 12 4	71,924 2 4	5,106 4 11	5,078 15 2	27 5 9	Ditto	ditto.
Maclean, L. A. ...	885 4 9	18 8 8	342 2 8	524 9 5	430 15 10	93 9 7	Ditto	ditto.
Morris, James (Senior) ...	662 6 9	......	146 0 0	516 6 9	......	516 6 9	Ditto	ditto.
Melville, William ...	1,868 8 8	......	359 4 6	1,509 4 2	1,339 13 7	169 6 7	Ditto	ditto.
Monteith, John ...	821 0 3	20 12 0	189 4 0	611 0 3	......	611 0 3	Ditto	ditto.
Murdock, Mackenzie & Co. ...	5,598 2 8	17 10 1	5,037 6 4	543 2 3	458 0 8	85 1 7	Ditto	ditto.
Meyers, A. J. ...	3,876 3 6	4,248 9 10	2,804 7 10	1,823 1 10	1,580 10 0	242 7 10	Ditto	ditto.
Meer Dawood Ally ...	3,044 0 2	1,459 3 0	229 14 5	1,354 14 9	1,191 12 2	163 2 7	Ditto	ditto.
Munnoc Lall ...	1,410 4 10	......	647 10 7	762 10 3	......	762 10 3	Ditto	ditto.
Muddonjee Dhurrumsee ...	880 0 2	......	68 9 6	811 6 8	472 10 8	338 12 0	Ditto	ditto.
Michael, J. C. (3rd) ...	10,225 7 0	7,099 4 9	1,573 8 10	1,552 9 5	1,406 12 10	145 12 7	Ditto	ditto.
Mohamed Mamood Shah Shahibzada ...	16,074 5 7	10,017 10 7	1,496 13 0	4,559 14 0	712 8 0	3,847 6 0	Ditto	ditto.
Morgan, C. ...	1,978 6 3	685 1 2	200 1 11	1,093 3 2	813 3 5	279 15 9	Ditto	ditto.
Murray, James (Black and Murray) ...	14,154 7 2	9,637 3 3	2,570 12 5	1,946 7 6	1,927 8 8	18 15 10	Ditto	ditto.
Mugneeram ...	4,227 6 6	1,405 6 1	2,040 11 0	781 5 5	695 14 0	85 7 5	Ditto	ditto.
Modhusudun Dutt (No. 2) ...	8,150 7 5	6,026 15 11	1,224 7 5	899 0 1	896 9 3	2 6 10	Ditto	ditto.
Mudhusoodun Pyne ...	1,762 10 1	......	203 11 0	1,558 15 1	......	1,558 15 1	Ditto	ditto.
Marshall Brothers ...	12,811 4 11	6,749 8 9	4,650 2 0	1,411 10 2	1,294 8 4	117 1 10	Ditto	ditto.
Mangos, C. D. ...	13,687 12 10	4,643 6 11	8,055 1 1	989 4 10	858 0 9	131 4 1	Ditto	ditto.
Martin, J. C. ...	2,327 4 4	840 5 5	159 13 4	1,327 0 7	1,239 1 1	87 15 6	Ditto	ditto.
Mohamed Baker Aga ...	2,098 2 9	1,032 11 3	432 2 10	633 4 8	534 8 1	98 12 7	Ditto	ditto.

Estates	Whole amount of receipts.	Whole Disbursements.		Balance.	Portion of balance applicable to dividends now payable.	Net balance.	Probable outturn of the dependencies.
		Dividends paid.	Other payments.				
	Rs. A. P.	Rs. A. P.	Rs. A. P.	Rs. A. P.	Rs. A. P.	Rs. A. P.	
Megraj Chogemull Kootary (Megraj Chogemull).	11,487 2 8	7,885 9 6	2,352 5 0	1,249 4 2	1,133 4 11	115 15 3	Nothing further recoverable.
McArthur, James ...	1,119 15 6	.....	62 14 8	1,057 0 10	965 14 3	91 2 7	Ditto ditto.
McRay, W. R. ...	864 6 6	122 7 4	23 14 6	718 0 8	146 1 6	571 15 2	Ditto ditto.
Mohabharut Roy ...	10,914 8 0	.....	4,062 1 0	6,852 7 0	.....	6,852 7 0	Ditto ditto.
Moorallydhur Bungsheedhur ..	10,977 9 11	5,374 6 2	4,453 11 6	1,149 8 3	1,039 13 4	109 10 11	Ditto ditto.
Muddun Mohun Dey and another ...	40,990 4 2	34,781 7 11	5,687 12 8	520 15 7	437 6 4	83 9 3	Ditto ditto.
Mohendra Nath Bose ...	3,094 3 9	.....	2,421 8 5	672 11 4	.....	672 11 4	Ditto ditto
Makhun Lall Sett ...	3,120 11 5	.....	1,681 10 7	1,439 0 10	.....	1,439 0 10	Ditto ditto.
Mason, W. M. ...	594 8 6	.....	0 9 0	593 15 6	.....	593 15 6	Ditto ditto.
Minna Mull ...	7,814 3 10	4,700 1 5	2,283 3 2	830 15 3	801 4 4	29 10 11	Ditto ditto.
Mohendra Nath Mullick ...	9,662 3 3	4,460 9 6	4,084 5 9	1,117 4 2	829 7 1	287 13 1	Ditto ditto.
Mohendra Nath Bose (2nd) ..	658 2 3	260 1 10	196 12 1	201 4 4	201 4 4	.....	Ditto ditto.
Mohamed Bhoy ...	3,774 9 10	1,503 12 10	1,533 8 1	737 4 11	586 1 7	151 3 4	Ditto ditto.
Moolchand and Jesraj .	7,691 13 11	3,899 0 3	2,290 12 5	1,502 1 3	1,008 3 5	493 13 10	Ditto ditto.
Mohamed Moosajee Atea ...	3,432 14 7	91 8 11	2,638 9 4	702 12 4	472 1 9	230 10 7	Ditto ditto.
Murdock, James (separate account) ...	66,289 0 9	54,572 10 0	2,860 4 1	8,856 2 8	.....	8,856 2 8	Ditto ditto.
Moran, S. (separate account) ...	60,401 2 3	56,169 0 4	2,940 1 2	1,292 0 9	.....	1,292 0 9	Ditto ditto.
Meyers, F. ...	1,263 13 6	.....	139 0 0	1,124 13 6	.....	1,124 13 6	Ditto ditto.
MacDonald, Daniel ...	1,691 14 2	247 8 0	589 13 2	854 9 0	609 11 3	244 13 9	Ditto ditto
Martin, William ...	2,106 11 8	75 0 0	552 6 2	1,479 5 6	1,425 0 0	54 5 6	Ditto ditto.
Michael, J. C. (2nd) ...	7,760 12 8	5,358 3 5	1,869 3 4	533 5 11	.....	533 5 11	Ditto ditto.
Meddlecoat, J. H. P ...	1,011 14 6	111 7 11	98 14 5	801 8 2	579 6 5	222 1 9	Ditto ditto
Meik, George ...	525 0 0	.....	.....	525 0 0	.....	525 0 0	Ditto ditto.
Nursing Chunder Bose ...	1,030 0 0	.....	202 11 0	827 5 0	.....	827 5 0	Ditto ditto.
Nyse, John ...	750 2 11	.....	171 4 0	578 14 11	.....	578 14 11	Ditto ditto.
Nemai Churn Byaack ...	1,210 13 0	.....	428 5 4	782 7 8	696 8 1	85 15 7	Ditto ditto.
Norman Brothers ...	19,569 14 7	9,267 15 3	5,906 1 4	4,395 14 0	4,395 14 0	.....	Ditto ditto.
Nobin Kristo Ghose ...	2,450 0 0	617 3 1	536 10 3	1,296 2 8	1,063 3 1	232 15 7	Ditto ditto.
Nundolall Shaw and Anuntolall Shaw ...	1,950 0 0	.....	249 6 6	1,700 9 6	.....	1,700 9 6	Ditto ditto.
Narain Sing & Co. ...	32,007 6 11	18,805 8 7	9,718 1 2	3,483 13 2	3,424 11 7	59 1 7	Ditto ditto.
Nicol, J. Dyce ...	23,409 1 11	9,527 9 10	5,556 0 4	8,325 7 9	1,549 5 8	6,776 2 1	Ditto ditto.
Nilcomole Mitter ...	500 0 0	.....	.....	500 0 0	.....	500 0 0	Ditto ditto.
Nicholls, W.. and another (W. Nicholls & Co.).	18,841 1 4	13,296 2 7	4,261 1 2	1,283 13 7	947 14 10	335 14 9	Ditto ditto.
Nobin Chunder Dey ...	1,375 1 7	542 8 0	247 1 10	585 7 9	585 7 9	.....	Ditto ditto.

Narain Sing and Dhumput Sing ...	2,443 7 5	716 14 10	1,225 13 4	500 11 3	403 4 8	97 6 7	Ditto	ditto.
Nilmadhub Shaw and Brothers ...	639 13 7	......	127 12 9	512 0 10	......	512 0 10	Ditto	ditto.
Nicholas, J. D. (Kelly & Co.) ...	12,300 9 3	5,409 12 1	2,807 11 6	4,583 1 8	2,371 14 8	2,211 3 0	Ditto	ditto.
Nooncurnmull and others (Nooncurnmull Surutram).	11,789 8 7	8,535 15 4	2,351 7 6	902 1 9	808 1 8	94 0 1	Ditto	ditto.
Nagendra Nath Sen ...	1,199 10 6	......	689 2 6	510 8 0	......	510 8 0	Ditto	ditto.
Owen, Allhuson & Co. ...	29,891 0 9	794 12 2	25,800 15 4	3,295 4 8	3,163 15 10	131 4 10	Ditto	ditto
Oliva, L. B. ...	23,729 2 7	17,569 15 0	5,445 11 5	713 8 2	......	713 8 2	Ditto	ditto.
Ogle & Co., John ...	2,03,140 10 8	1,56,004 1 7	31,309 4 11	15,827 4 2	15,462 10 5	364 9 9	Ditto	ditto.
Obhoy Churn Dutt ...	1,127 0 6	487 9 9	137 0 0	502 6 9	......	502 6 9	Ditto	ditto.
Obhoyram Buddree Chand ...	1,910 9 0	......	372 14 6	1,537 10 6	......	1,537 10 6	Ditto	ditto.
Ord, W. K. ...	679 8 4	57 7 10	53 4 9	568 11 9	503 11 10	64 15 11	Ditto	ditto.
Ord, William (Murdock & Co.) ...	3,515 2 3	......	2,944 14 7	570 3 8	511 1 0	59 2 8	Ditto	ditto.
O'Neil, Thomas ...	1,510 13 8	......	671 3 1	839 10 7	465 9 6	374 1 1	Ditto	ditto.
Omrao Sing ...	2,747 15 11	1,845 11 8	391 9 2	510 11 1	352 14 1	157 13 0	Ditto	ditto.
Osman Gunny ...	1,892 8 0	......	982 0 3	910 7 9	......	910 7 9	Ditto	ditto.
Palmer & Co. ...	5,69,984 6 1	4,01,103 3 11	1,67,389 8 10	1,491 9 4	542 6 10	949 2 6	Ditto	ditto.
Palmer, John ...	7,707 7 11	6,152 6 4	1,001 11 3	553 6 4	542 0 9	11 5 9	Ditto	ditto.
Palmer, Thomas ...	1,473 0 0	......	887 4 9	585 11 3	......	585 11 3	Ditto	ditto.
Pew, P. L. ...	52,965 13 1	34,068 0 5	12,875 1 11	6,022 10 9	5,847 11 2	174 15 7	Ditto	ditto.
Parry, John ...	4,996 8 11	1,744 7 6	1,616 0 2	1,636 1 3	1,549 15 9	86 1 6	Ditto	ditto.
Price, Henry ...	15,380 1 3	......	14,642 1 8	737 15 7	660 5 9	77 9 10	Ditto	ditto.
Posner, J. ...	7,075 8 6	2,972 1 0	3,003 4 3	1,100 3 3	806 10 9	293 8 6	Ditto	ditto.
Phillips, John ...	4,156 0 0	10 11 8	248 10 5	3,896 9 11	1,501 10 4	2,394 15 7	Ditto	ditto.
Phillipe, DeRahee G. W. ...	1,260 0 0	538 14 4	98 9 5	622 8 3	562 4 3	60 4 0	Ditto	ditto.
Prasana Kumar Bannerji ...	1,241 0 0	......	325 2 0	915 14 0	......	915 14 0	Ditto	ditto.
Prosun Chand Galeecha (Dhurrum Chand Poorun Chand).	96,847 4 1	42,332 11 4	33,592 7 0	20,922 1 9	19,981 12 7	940 5 2	Ditto	ditto.
Punchanon Dass Mungle Chand (Hatee Sing Sooraj Mull Mungle Chand).	6,183 14 3	......	2,744 3 0	3,439 11 3	......	3,439 11 3	Ditto	ditto.
Protap Chunder Chatterjee ...	748 11 7	......	7 1 0	741 10 7	......	741 10 7	Ditto	ditto.
Purmessur Khan and others (Purmessur Khan and Debendra Nath Khan, Purmessur Khan & Co.).	3,129 9 9	1,109 0 8	1,364 2 4	656 6 9	656 6 9	......	Ditto	ditto.
Payne & Co. (Bombay firm) (Walter Newton & Co.).	8,026 0 0	6,125 3 10	1,364 13 10	534 14 4	531 12 8	3 1 8	Ditto	ditto.
Palmer & Co., R. G. ...	35,446 13 0	15,056 7 5	11,148 4 1	9,242 1 6	310 1 3	8,932 0 3	Ditto	ditto.
Poolin Chunder Mitter ...	637 11 1	......	......	637 11 1	......	637 11 1	Ditto	ditto.
Panna Lall Addy ...	1,318 12 6	......	167 0 11	1,151 11 7	......	1,151 11 7	Ditto	ditto.
Pran Nath Paul ...	3,223 4 6	773 10 5	1,269 3 10	1,180 6 3	1,150 8 7	29 13 8	Ditto	ditto.
Pursuttum Lall ...	3,210 6 0	......	913 13 6	2,296 8 6	......	2,296 8 6	Ditto	ditto.
Panchaud, G. H. L. ...	519 9 5	......	......	519 9 5	......	519 9 5	Ditto	ditto.
Pasumarti Jagapa ...	9,184 7 10	......	2,403 7 0	6,781 0 10	......	6,781 0 10	Ditto	ditto.

ESTATES.	Whole amount of receipts.	WHOLE DISBURSEMENTS. Dividends paid.	WHOLE DISBURSEMENTS. Other payments.	Balance.	Portion of balance applicable to dividends now payable.	Net balance.	Probable outturn of the dependencies.
	Rs. A. P.	Rs. A. P.	Rs. A. P.	Rs. A. P.	Rs. A. P.	Rs. A. P.	
Quillet, DeGray & Co. ...	6,539 10 4	3,148 1 11	2,380 4 6	1,011 3 11	1,011 3 11	.....	Nothing further recoverable.
Runtz, Rees & Co. ...	19,490 12 2	3,907 1 1	10,031 14 8	5,551 12 5	5,551 12 5	.....	Ditto ditto.
Russell, C. D. ...	8,785 14 2	7,162 15 2	1,059 0 9	563 14 3	20 15 2	542 15 1	Ditto ditto.
Rughoo Nath Bose ...	1,778 13 4	702 12 10	444 4 0	631 12 6	591 11 0	40 1 6	Ditto ditto.
Rogers, Alexander ...	10,892 13 6	5,963 0 4	4,136 10 9	793 2 5	.....	793 2 5	Ditto ditto.
Rajkissore Dutt ...	4,683 12 2	... ..	665 13 6	4,017 14 8	.....	4,017 14 8	Ditto ditto.
Rousac, A. G. ...	12,304 10 3	8,940 2 5	1,063 11 3	2,300 12 7	2,300 12 7	.....	Ditto ditto.
Ramdhone Mitter ...	838 5 4	52 4 5	217 8 2	568 8 9	453 1 6	115 7 3	Ditto ditto.
Rustomjee, Cowasjee & Co. ...	11,032 15 0	3,373 5 8	6,015 1 6	1,644 7 10	1,285 10 3	358 13 7	Ditto ditto.
Ramsabuck Misser and others ...	1,23,206 9 4	76,538 6 6	29,912 4 9	16,755 14 1	16,382 14 4	372 15 9	Ditto ditto.
Robinson, S. W. ...	1,129 10 9	.....	132 0 0	997 10 9	.....	997 10 9	Ditto ditto.
Ram Narain Sreemaney ...	9,319 8 0	4,158 0 11	2,041 7 1	3,120 0 0	3,066 10 8	53 5 4	Ditto ditto.
Robinson, J. J. (Wallace & Co.) ...	3,052 8 8	282 0 0	2,027 4 6	743 4 2	309 14 9	433 5 5	Ditto ditto.
Ram Narain Janookey Persad ...	5,296 4 9	.....	2,792 3 0	2,504 1 9	.....	2,504 1 9	Ditto ditto.
Russick Lall Paul ...	702 5 3	.....	23 11 6	678 9 9	.....	678 9 9	Ditto ditto.
Ritz, Alfred ...	1,139 0 0	.....	208 7 6	930 8 6	690 13 5	239 11 1	Ditto ditto.
Ram Gopal Paul ...	8,141 12 6	4,391 8 3	2,408 6 8	1,341 13 7	1,143 9 1	198 4 6	Ditto ditto.
Ram Dass Paul ...	1,545 8 3	506 2 6	475 10 9	563 11 0	421 3 0	142 8 0	Ditto ditto.
Rakhal Chunder Banerjee (junior) ...	5,534 7 3	138 2 6	2,866 9 9	2,529 11 0	62 13 6	2,466 13 6	Ditto ditto.
Rushton, H. P., and others (Rushton Brothers). ...	81,120 10 6	47,540 3 8	26,799 11 0	6,780 11 10	5,409 13 3	1,370 14 7	Ditto ditto.
Rustomjee Cowasjee ...	3,796 13 7	1,637 9 1	425 11 10	1,733 8 8	1,537 12 2	195 12 6	Ditto ditto.
Rushton, Edward ...	2,784 3 9	1,418 6 4	708 1 11	657 11 6	657 11 6	.....	Ditto ditto.
Ramsarun Lall ...	57,280 1 1	31,982 11 9	21,011 11 2	4,285 10 2	4,128 9 5	157 0 9	Ditto ditto.
Ramkissen Kotary ...	7,527 14 3	4,686 9 5	1,842 6 5	998 14 5	998 14 5	.....	Ditto ditto.
Ramsamull Panna Lall ...	1,933 2 9	614 11 8	720 0 5	598 6 8	388 10 3	209 12 5	Ditto ditto.
Robertson, C. A. (1st) ...	1,500 0 0	477 2 10	81 12 9	941 0 5	726 4 9	214 11 8	Ditto ditto.
Ramdhone Mullick ...	46,978 0 3	455 4 3	45,512 6 2	1,010 5 10	.....	1,010 5 10	Ditto ditto.
Rajendra Coondoo and another ...	860 0 0	.....	262 7 0	597 9 0	.....	597 9 0	Ditto ditto.
Reinhold, H. (Reinhold & Co.) ...	13,795 10 0	10,430 3 10	2,663 9 1	701 13 1	519 7 0	182 6 1	Ditto ditto.
Reinhold, H. C., and another (Reinhold Brothers). ...	5,998 10 10	135 7 9	1,717 6 5	4,145 12 8	233 14 0	3,911 14 8	Ditto ditto.
Reinhold, H. C. (separate account) ...	790 0 0	7 11 2	53 1 8	729 3 2	718 3 3	10 15 11	Ditto ditto.
Ritz, Reinhold and Feilman ...	13,333 5 0	10,502 0 10	1,073 3 9	1,758 0 5	216 13 6	1,541 2 11	Ditto ditto.
Rashbehary Roy and Jallodhur Roy ...	33,065 14 4	4,904 4 5	23,266 11 6	4,894 14 5	1,193 12 6	3,701 1 11	Ditto ditto.
Ramkissen ...	10,32,481 9 6	2,73,173 9 8	7,53,667 5 10	5,642 10 0	4,278 15 7	1,363 10 5	Ditto ditto.

Rambox Rattey (Choonee Lall Jankey Persad).	5,329	3	8	3,223	2	6	1,546	6	7	559	10	7	541	11	1	17	15	6	Ditto	ditto.
Ram Chunder Tarafdar ...	633	14	9	.....			60	4	0	573	10	9	.....			573	10	9	Ditto	ditto.
Roghu Nath Dass Muddun Gopal ...	72,737	8	8	33,421	3	9	28,410	1	2	10,906	3	9	5,081	8	3	5,824	11	6	Ditto	ditto.
Ramdayal Ghose (1st) ...	753	0	0	.....			45	8	3	707	7	9	647	14	2	59	9	7	Ditto	ditto.
Raj Chunder Pakhira ...	1,363	0	6	324	6	2	233	9	4	805	1	0	544	13	8	260	3	4	Ditto	ditto.
Runghore Dass Dhunjee ...	26,104	7	3	9,689	7	8	10,303	7	3	6,111	8	4	4,617	2	11	1,494	5	5	Ditto	ditto.
Ramrick Dass and Nundram ...	11,036	10	6	2,906	4	0	1,691	6	3	6,439	0	3	3,393	12	0	3,045	4	3	Ditto	ditto.
Ramprotap Buldeb Dass ...	2,021	6	3	.....			1,187	10	0	833	12	3	.....			833	12	3	Ditto	ditto.
Rekub Dass Bagree and others ...	4,023	14	9	.....			1,711	12	3	2,312	2	6	.....			2,312	2	6	Ditto	ditto.
Ram Lall Mullick ...	1,396	5	11	542	7	9	654	11	7	199	2	7	167	1	1	32	1	6	Ditto	ditto.
Saunders, May and Fordyce ...	4,03,262	11	3	3,21,713	7	1	68,906	4	4	12,642	15	10	11,992	9	4	650	6	6	Ditto	ditto.
Stewart & Co., W. C. ...	8,040	4	10	2,515	5	5	1,414	11	0	4,110	4	5	3,953	12	5	156	8	0	Ditto	ditto.
Senaes, W. DeMonte ...	2,514	11	7	.....			912	2	6	1,602	9	1	1,533	5	10	69	3	3	Ditto	ditto.
Smith, W. S. ...	3,620	13	5	2,635	15	6	471	0	8	513	13	3	471	11	1	42	2	2	Ditto	ditto.
Stocquelor, J. H. ...	7,138	0	0	210	6	5	5,537	0	7	1,390	9	0	1,122	12	7	267	12	5	Ditto	ditto.
Schlatter, Michael ...	20,294	14	10	16,357	13	1	2,433	0	9	1,504	1	0	1,006	8	1	497	8	11	Ditto	ditto.
Smoult, W. H. ...	1,976	10	3	248	4	11	328	9	3	1,399	12	1	1,040	0	0	359	12	1	Ditto	ditto.
Sheppard, G. A. ...	5,598	2	10	4,179	1	11	662	0	7	757	0	4	652	6	0	104	10	4	Ditto	ditto.
Scott, C. C. J. ...	7,723	13	9	4,657	10	11	2,002	0	10	1,062	2	0	631	9	11	430	8	1	Ditto	ditto.
Sarkies & Co., P. J. ...	52,610	10	9	6,473	9	2	45,380	2	2	756	15	5	602	12	10	154	2	7	Ditto	ditto.
Smith, Huffnagle & Co. ...	26,632	14	5	13,828	7	4	10,798	4	10	2,006	2	3	.....			2,006	2	3	Ditto	ditto.
Stubbs, W. V. G. ...	3,491	6	5	81	3	10	1,649	12	7	1,760	6	0	262	2	3	1,498	3	9	Ditto	ditto.
Snook, J. V. ...	775	10	0	.....			158	0	0	617	10	0	.....			617	10	0	Ditto	ditto.
Sreegopal Misser ...	1,951	0	0	55	14	4	678	6	8	1,216	11	0	1,093	0	11	123	10	1	Ditto	ditto.
Solomon Moladina ...	64,041	6	10	43,579	4	11	17,498	10	0	2,963	7	11	2,682	12	0	280	11	11	Ditto	ditto.
Stewart, W. M. ..	24,989	4	9	12,513	15	1	6,325	15	7	6,149	6	1	5,610	9	8	538	12	5	Ditto	ditto.
Sarkies, P. J. ...	10,227	7	7	6,170	7	7	3,097	5	4	959	10	8	787	6	3	172	4	5	Ditto	ditto.
Sreenath Mullick ...	17,782	7	7	13,851	5	6	3,389	12	10	541	5	3	431	12	6	109	8	9	Ditto	ditto.
Sewnundun Panday ...	32,283	9	9	18,836	10	11	7,473	4	4	5,973	10	6	5,242	11	7	730	14	11	Ditto	ditto.
Smith, A. M. ...	2,800	10	7	244	1	6	801	15	7	1,754	9	6	1,371	10	8	382	14	10	Ditto	ditto.
Shib Chunder Seal ...	13,555	3	9	3,239	6	10	9,479	3	3	836	9	8	836	9	8	.....			Ditto	ditto.
Solomon & Co., D. H. ...	16,053	12	9	9,548	4	5	4,711	4	9	1,794	3	7	1,606	0	1	188	3	6	Ditto	ditto.
Schiller, F., and another (Borradaile, Schiller & Co.).	1,52,678	15	7	84,399	13	8	31,168	12	4	37,110	5	7	29,871	6	4	7,238	15	3	Ditto	ditto.
Smith & Co., Thomas ...	66,941	4	3	8,918	11	0	56,288	9	2	1,734	0	1	1,078	12	0	655	4	1	Ditto	ditto.
Schiller, F. ...	5,482	10	7	1,287	9	0	1,489	4	1	2,705	13	6	2,489	5	2	216	8	4	Ditto	ditto.
Sham Lall Khettry (Dewkey Nundon Lalljee Mull).	16,952	12	6	12,583	1	6	3,302	15	10	1,066	11	2	1,066	11	2	.....			Ditto	ditto.
Seetaram Rohatjee ...	945	8	3	.....			158	6	6	787	1	9	.....			787	1	9	Ditto	ditto.
Smallwood, A. (Lloyd & Co.) ...	6,736	11	3	1,402	0	9	2,790	9	2	2,544	1	4	.....			2,544	1	4	Ditto	ditto.
Soorjeemull Mugneeram and Hunmuntram (Soorjeemull Mugneeram).	3,728	8	6	1,065	11	7	1,541	0	1	1,121	12	10	1,121	12	10	.....			Ditto	ditto.

ESTATES.	Whole amount of receipts.	Whole Disbursements.		Balance.	Portion of balance applicable to dividends now payable.	Net balance.	Probable outturn of the dependencies.
		Dividends paid.	Other payments.				
	Rs. A. P.	Rs. A. P.	Rs. A. P.	Rs. A. P.	Rs. A. P.	Rs. A. P.	
Stewart, T. ...	2,202 15 3	.....	1,052 10 9	1,150 4 6	.....	1,150 4 6	Nothing further recoverable.
Soutendra Mohun Tagore ...	810 5 9	132 12 7	62 11 4	614 13 10	614 13 10	.....	Ditto ditto.
Stephen, A. J. (2nd) ...	1,201 8 0	212 14 5	42 1 2	946 8 5	326 1 3	620 7 2	Ditto ditto.
Shib Dass Moohury (Ram Dhone and Shib Dass Mohurry).	3,34,305 1 8	1,29,388 1 1	2,04,574 5 9	342 10 10	342 10 10	.. ...	Ditto ditto.
Shama Churn Sen ...	98,394 5 11	27,457 7 6	70,422 3 6	514 11 4	.....	514 11 4	Ditto ditto.
Sheodan Mull and another ...	8,847 1 4	6,962 3 4	818 4 5	1,066 9 7	487 14 1	578 11 6	Ditto ditto.
Schallay & Co. ...	1,077 2 1	212 9 7	191 10 4	672 14 2	214 2 8	458 11 6	Ditto ditto.
Soogun Chand Gopikissen ...	12,874 12 3	4,261 5 4	3,174 8 10	5,438 14 1	5,182 7 1	256 7 0	Ditto ditto.
Smith & Co., McGavin ...	678 13 3	.....	4 3 0	674 10 3	.....	674 10 3	Ditto ditto.
Sew Narain and another (Sewpal and Sew Narain).	57,542 0 5	23,259 3 3	31,582 13 2	2,700 0 0	.....	2,700 0 0	Ditto ditto.
Summers, A. (Watson and Summers) ...	12,382 14 2	5,529 15 0	5,901 15 9	950 15 5	358 9 7	592 5 10	Ditto ditto.
Stewart, C. ...	60,695 15 8	41,586 15 4	17,660 4 1	1,448 12 3	312 15 11	1,135 12 4	Ditto ditto.
Shookdeo Dass Mothura Dass ...	1,316 11 3	.....	246 6 6	1,070 4 9	... ..	1,070 4 9	Ditto ditto.
Soorjeemull Kadia (Sew Narain Soorjeemull).	2,442 15 10	.....	885 13 11	1,557 1 11	.....	1,557 1 11	Ditto ditto.
Sree Nath Sett and others ...	2,980 9 3	.....	1,223 13 1	1,756 12 2	.....	1,756 12 2	Ditto ditto.
Sreedam Chunder Seal ...	4,586 0 10	2,395 15 8	1,066 8 8	1,123 8 6	2 1 2	1,121 7 4	Ditto ditto.
Straw, F. T. ...	1,22,111 4 8	60,083 2 9	61,483 11 0	594 6 11	564 4 7	30 2 4	Ditto ditto.
Sarat Coomar Sen ...	4,620 6 0	.....	432 3 6	4,188 2 6	.....	4,188 2 6	Ditto ditto.
Sarat Chunder Sen ...	2,777 5 6	816 0 0	705 15 11	1,255 5 7	40 0 0	1,215 5 7	Ditto ditto.
Suresh Chunder Mookerjee ...	597 0 0	.....	.....	597 0 0	.....	597 0 0	Ditto ditto.
Shib Chunder Paul ...	2,184 9 3	.....	56 5 4	2,128 3 11	.....	2,128 3 11	Ditto ditto.
Sykes, G. S. (Sykes & Co). ...	14,633 11 5	.....	20 4 0	14,613 7 5	.....	14,613 7 5	Ditto ditto.
Tullah & Co. (1st) ...	1,21,128 2 10	68,615 10 0	50,626 7 9	1,886 1 1	1,139 10 6	746 6 7	Ditto ditto.
Tullah & Co. (2nd) ...	19,223 10 2	8,961 4 4	9,684 15 7	577 6 3	411 1 3	166 5 0	Ditto ditto.
Thomas & Co. ...	4,55,276 15 3	3,98,103 6 2	50,239 15 2	6,933 9 11	1,314 1 0	5,619 8 11	Ditto ditto.
Trower, Charles ...	2,177 9 0	240 0 0	72 0 0	1,865 9 0	811 7 5	1,054 1 7	Ditto ditto.
Twentyman & Co. ...	683 6 7	.....	152 2 1	531 4 6	.....	531 4 6	Ditto ditto.
Thomas, John ...	740 0 0	.....	.. ...	740 0 0	.....	740 0 0	Ditto ditto.
Tara Chand Koramull Dowlut Chand ...	22,970 1 11	6,210 6 9	14,187 12 0	2,571 15 2	2,199 13 3	372 1 11	Ditto ditto.
Teitkins, A. H. ...	5,671 12 10	3,819 12 0	1,248 0 5	604 0 5	.....	604 0 5	Ditto ditto.
Turton, Sir T. E. M. ...	2,49,996 3 10	1,48,440 1 3	1,00,447 2 8	1,108 15 11	661 10 1	447 5 10	Ditto ditto.
Troylakha Nath Roy and another ...	26,576 11 0	18,630 12 6	7,142 7 5	803 7 1	712 2 11	91 4 2	Ditto ditto.

Thorndike, A., and another (Atkinson, Tilton & Co.).	48,581	15	8	19,772	1	0	25,210	0	8	3,599	14	0	2,681	9	4	918	4	8	Ditto	ditto.
Tunsook Roy and Premsook Roy ...	27,590	9	11	9,941	11	1	10,889	8	2	6,759	6	8	5,755	3	2	1,024	3	6	Ditto	ditto.
Turnbull, R. A. ...	18,183	9	3	2,771	3	3	14,076	13	11	1,335	8	1	107	3	8	1,228	4	5	Ditto	ditto.
Templeton, A. N. (2nd) ...	1,600	0	0	58	10	0	77	9	9	1,463	12	3	1,231	1	8	232	10	7	Ditto	ditto.
Tincowry Dass ...	6,741	8	4	3,118	13	10	1,039	11	7	2,581	14	11	715	4	2	1,866	10	9	Ditto	ditto.
Teruthram ...	1,445	3	9	497	0	6	226	0	7	722	2	8	230	0	5	492	2	3	Ditto	ditto
Taraprasanna Sircar ...	1,62,699	9	6	63,824	2	7	83,375	6	10	15,500	0	1	12,562	9	9	2,937	6	4	Ditto	ditto.
Vandenberg, J. B. (2nd) ...	5,740	4	3	4,036	0	7	440	2	5	1,264	1	3	1,235	11	11	28	5	4	Ditto	ditto.
Voight & Co., S. E. ...	1,680	0	4	199	0	0	13	8	8	1,467	7	8	.....			1,467	7	8	Ditto	ditto.
Willis, Joseph ...	1,20,346	2	7	88,227	7	6	29,952	12	8	2,165	14	5	1,839	2	11	326	11	6	Ditto	ditto.
Willis, F. F. ...	7,102	7	11	892	13	4	2,906	1	7	3,303	9	0	2,932	2	8	371	6	4	Ditto	ditto.
Wood, Olliffe & Co. ...	3,276	6	10	.....			1,427	4	6	1,849	2	4	.....			1,849	2	4	Ditto	ditto.
Waring, E. S. S. ...	3,066	8	8	1,784	1	7	529	5	2	753	1	11	647	4	3	105	13	8	Ditto	ditto.
Williams, Stephen ...	20,504	1	5	17,453	13	10	2,207	14	7	842	5	0	474	9	9	367	11	3	Ditto	ditto.
Watson & Co. (Gibbon & Co.) ...	1,06,519	3	0	87,390	15	9	15,992	0	3	3,136	3	0	2,703	9	8	432	9	4	Ditto	ditto.
Wood, H. W. J. ...	2,589	13	0	712	3	7	885	5	3	942	4	2	785	11	9	156	8	5	Ditto	ditto.
Webb, John ...	4,457	8	3	2,391	0	8	1,103	4	5	963	3	2	890	14	9	72	4	5	Ditto	ditto.
Wood, David ...	1,414	3	0	56	7	3	809	0	3	548	11	6	548	11	6	.. ...			Ditto	ditto.
Wallis, C. B. ...	4,520	11	5	6,592	2	1	1,403	4	3	525	5	1	120	11	5	404	9	8	Ditto	ditto.
Woodin, W. (G. F. Hodgkinson & Co.)	25,413	4	5	1,022	8	2	22,444	3	9	1,946	8	6	1,549	5	6	397	3	0	Ditto	ditto.
Woomes Chunder Bannerjee (G. F. De-Lemans & Co.).	23,991	14	1	19,723	8	11	3,084	8	11	1,183	12	3	1,183	12	3	.....			Ditto	ditto.
Wildi, J. J. ...	1,200	0	0	126	6	4	21	7	1	1,052	2	7	.....			1,052	2	7	Ditto	ditto.
Wiseham, William ...	967	3	6	.....			32	0	0	935	3	6	.....			935	3	6	Ditto	ditto.
Winterscale, James ...	1,254	12	10	175	0	0	878	7	0	701	5	10	.....			701	5	10	Ditto	ditto.
Woopendra Nath Dey and another ...	6,164	5	9	1,744	0	6	1,302	15	9	3,117	5	6	1,548	13	11	1,568	7	7	Ditto	ditto.
Woopendra Chander Singha ...	6,166	0	9	.....			293	0	3	5,873	0	6	.....			5,873	0	6	Ditto	ditto.
Zunini, A. ...	4,860	2	9	1,002	1	3	2,984	10	3	873	7	3	534	6	9	339	0	6	Ditto	ditto.

In addition to the above, there are 2,197 estates with balances under Rs. 500 each, aggregating Rs. 2,13,337-3-8, the particulars of which may be learnt at this office. The Official Assignee has received for remuneration for the quarter ending 30th September 1901 Rs. 6,643-12-5.

CALCUTTA,
The August 1902.

A. B. MILLER,
Official Assignee.

Sale Notice.

NOTICE is hereby given, under sections 6 and 13, Act XI of 1859, that the undermentioned estates and shares of estates in the district of 24-Parganas will be put up for sale at the office of the Collector of that district on the 22nd September 1902 at 12 o'clock noon for arrears of revenue and other demands which by law are realisable as arrears of land revenue.

When in columns 5, 7 and 9 of the appended statement it is stated that only a share is to be sold, it is to be understood that a separate account is kept for that share, and that the other share or shares are excluded from sale.

Class I.—Permanently-settled estates.

Consecutive No.	Tauzi No.	Name of pargana and mahal.	Sadar jama of the whole estate.	Whether the whole estate is to be sold.	If only a share is to be sold, the specification of such share.	Names of proprietors of property to be sold.	If only a share is to be sold, the sadar jama of such share.	If the whole estate is to be sold, the arrears due from it.	If only a share is to be sold, the arrears due from it.
1	2	3	4	5	6	7	8	9	10
1	1	Magura, Chetla, and others.	Rs. A. P. 5,422 12 2	.....	Excluding 8a. share, the remaining 8a. share in each of the mouzas Sripore, Bagerkhola, and Rajumona chak; and excluding 3a. 4g. 2k. 12t. share, the remaining 12a. 15g. 9k. 1kr. 8t. share in all other mouzas will be sold.	Kali Chandra Roy Chowdhury and others.	Rs. A. P. 3,928 5 3	Rs. A. P.	Rs. A. P. 391 6 11½
2	3/1	Magura, Nuskerpore ...	8,304 3 11½	... .	Excluding 10a. share, 6a. share will be sold.	Bindu Bashini Debi and another.	3,122 7 2½	.....	148 13 11½
3	4	Magura, Kadamtolla, and others.	3,278 14 10	Whole ...	.....	Radha Binod Mandal and others.	...	199 14 4½	... .
4	85	Magura, Amgachia ...	984 14 7	.. .	Excluding 7a. in mouza chak Kantalia, the balance 9a., excluding 2a. 1g. 2k. share in each of the mouzas Habanpore and Nona, the remaining 13a. 18g. 2k., and the 16a share in the other mouzas will be sold.	Haricharan Bose ..	861 11 10	....	374 11 8
5	106	Magura, Bagdaha ..	998 1 10½	Whole ...	..	Narendra Kumar Bannerjea and others.	.....	35 6 8½	.. .
6	314	Muragacha, Harinarayanpur, and others.	12,212 13 4½	...	Excluding 8a. 8g. 6kg. 8t. 2k. 2kr. share, the balance 7a. 11g. 9kg. 11t. 1k. 1kr. share will be sold.	Troylukho Nath Biswas and others.	5,747 9 3	... .	47 11 0½
7	315/11	Muragacha, Raghunathpur, and others.	10,230 6 7	. ..	Excluding 14a. 17g. 2k. share, the remaining 1a. 2g. 2k. share will be sold.	Apurba Kumari Dasi	721 3 0	.....	130 5 11
8	385/9	Azimabad, Huda Rukhali, and others.	19,424 8 1½		Out of 33 mouzas, excepting mouza Kangramuri, and excluding 14a. 17g. 2k. share, the balance 1a. 2g. 2k. share will be sold.	Ditto ..	1,302 8 7½	. ....	142 12 5½

Alipore, the 1st September 1902.

MAHANANDA GUPTA, *for* Collector, 24-Parganas.

Notice of Deaths sent to the Administrator-General of Bengal under section 64 of Act II of 1874.

Name of deceased.	Place of death.	Date of death.	By whom death reported, and when.	REMARKS.
Mr. Percy Vaix, late 7th Assistant Superintendent, Port Blair Commission.	Andaman Settlements.	24th Feb. 1902 ...	Deputy Superintendent, Andaman Settlements, on 4th July 1902.	No Will. No application.
Mr. D. Geddes, late of S.S. *Flamingo*	Presidency General Hospital.	5th Aug. ,, ...	District Judge of 24-Parganas, Alipore, on 15th August 1902.	Not known whether or not the deceased has left any Will. No application.
Mr. J. Rodriques, late of 30 Creek Lane.	Ditto ...	8th ,, ,, ...	Ditto ditto ...	Ditto. Ditto.
Mrs. Emelia C. Thomas, late of No. 3-1 Karani Bagan West Lane.	Ditto ...	7th ,, ,, ...	Ditto ditto ...	Ditto. Ditto.
Mr. P. Morgan, late a Covenanted Driver.	Railway Hospital, Asansol.	6th July ,, ...	District Judge of Burdwan on 15th August 1902.	No Will.
Mr. R. P. Allen, late a Fireman on the East Indian Railway.	Tundla	22nd April ,, .	Judge of Agra on 14th August 1902.	Letters of Administration granted to Mr. A. S. Bailey, the Acting Locomotive Superintendent, East Indian Railway, on 13th August 1902.
Mr. G. E. Smith, late a Fireman on the East Indian Railway.	Do. ...	20th May ,, ..	Ditto ditto ...	Letters of Administration granted to Mr. A. S. Bailey, the Acting Locomotive Superintendent, East Indian Railway, on 12th August 1902.
Mr. Masters, late of the Salt Department.	Victor Hospital, Lahore.	24th ,, ,, .	District Judge of Lahore on 7th August 1902.	Will left, Mr. W. E. Browne, a Pleader of the Chief Court, Lahore, has applied for Probate on behalf of the widow of the deceased.
Mr. Frederick Marks, late a Fitter in the North-Western Railway.	Lahore	1st July ,, ..	Ditto ditto ..	No Will. No application.
Mrs. C. James, late of St. Vincent's Home.	Presidency General Hospital.	25th ,, ,, ...	District Judge of 24-Parganas, Alipore, on 2nd August 1902.	Not known whether the deceased has left any Will or not. No application.
Mr. Henry Drake, late of No. 4 Komedan Bagan Lane.	Ditto ...	23rd ,, ,,	Ditto ditto	Ditto. Ditto.
Mr. John K. Guest, late of No. 38 Komedan Bagan Lane.	Ditto .	20th ,, ,, ..	Ditto ditto .	Ditto. Ditto.

Calcutta, the 1st September 1902.

HENRY T. HYDE, Administrator-General of Bengal.

District Charitable Society.

Abstract of Cash Accounts of the Central Office for the month of July 1902.

Budget for 1902.	Receipts.	July 1902.	From 1st January to 31st July 1902.	Budget for 1902.	Payments.	July 1902.	From 1st January to 31st July 1902.
Rs.		Rs. A. P.	Rs. A. P.	Rs.		Rs. A. P.	Rs. A. P.
	Subscriptions—						
14,400	From Government	1,200 0 0	8,400 0 0	11,400	Grant to District Committees	958 0 0	6,760 0 0
11,441	,, the public	523 0 0	3,781 0 0	4,600	,, ,, Commissioner of Casual Relief ...	222 2 0	1,779 12 8
9,000	Donations and new subscriptions	*243 0 0	**2,946 14 4		,, ,, Police for Establishment	75 0 0	525 0 0
	Allowances towards cost of establishment—			20,895	,, ,, Native Committee	1,616 8 0	11,315 8 0
3,000	From Government	250 0 0	1,750 0 0	10,152	Pensions paid through Central Office... ...	831 0 0	5,740 0 0
.....	Interest on invested general fund ...	.....	.....	276	Schooling Fees ,, ,, ,, ...	13 0 0	131 0 0
39,803	,, ,, Trust Funds	96 4 0	18,963 9 6	3,000	Special Relief (on private orders)	201 6 0	1,306 5 0
684	Bakery proceeds	†76 3 6	††491 8 9	3,780	Alms House :—Establishment	310 0 0	2,214 8 0
4,047	Workshed proceeds	§211 0 0	§§1,826 10 6	10,500	Dieting	‡809 9 9	‡‡5,860 1 3
1,300	Refund on Casual Relief Account ...	143 11 6	667 8 6	1,080	Contingencies	128 6 0	736 8 0
3,200	,, ,, Special Relief ,, ...	69 0 0	1,025 1 0	.....	Roots and Shoes	.....	.....
500	Legacies	.....	.....	500	Clothing and Bedding ...	.....	267 4 0
150	Miscellaneous Accounts	0 3 2	12 2 3	700	Municipal Taxes	.....	383 3 0
....	Advances	.....	.....	250	Repairs	460 0 0	566 4 6
931	Deposits	162 9 3	534 8 9	3,282	Bakery	§248 5 0	§§1,780 0 3
460	Christmas dinner account	.....	5 0 0	5,238	Workshed	619 6 0	3,419 3 3
.....	G. P. Notes withdrawn from Bank's safe custody.	.....	600 0 0	7,368	Central Office :—Establishment	614 8 0	4,281 14 2
.....	G. P. Notes by corpus of Trust Funds	.....	.....	503	Commission on Collections...	31 6 10	205 11 7
.....	,, ,, by Security deposit ...	.....	500 0 0	300	Auditing Fees	.....	150 0 0
250	Donation to Native Committee ...	.....	.....	500	Rent (nett)	40 0 0	336 13 6
	Government grant for Alms House repairs.	2,000 0 0	2,000 0 0	550	Contingencies	55 10 3	338 3 10
				750	Printing and Advertising ...	29 0 0	504 2 0
				20	Interest on Overdraft	.. ..	2 4 0
				58	Bank's Commission	0 9 3	31 0 11
				5	Law Charges	.....	5 0 0
				800	E. I. Railway Co. for Passes	79 15 6	‡302 10 3
				.....	Advances	.....	10 0 0
				851	Deposits	179 9 10	912 4 8
				400	Christmas dinner account	.. ...	255 0 0
				.....	Safe custody deposit of G. P. Notes	.....	500 0 0
				.....	Security refunded	100 0 0	600 0 0
88,606	Total ...	4,074 15 5	48,503 15 7	88,514	Total ...	7,780 6 5	51,354 11 5

New subscriptions * Rs. 78; ** Rs. 304. ‡ Rupees 202-7 for Casual Relief; Rs. 50-5-3 for Special Relief.
Excluding cost of bread from Bakery for A. H. Dieting † Rs. 431-2; †† Rs. 2,942-15-6, Budget being Rs. 5,169.
Excluding cost of flour from Workshed to Bakery, § Rs. 123-7, §§ Rs. 804-5, Budget being Rs. 1,080.

MEMO.

	Rs. A. P.		Rs. A. P.
Receipts as above	48,503 15 7	Payments as above	51,354 11 5
Balance at credit in Bank of Bengal on 1st Jan. 1902	Rs. A. P. 2,774 0 8	Balance at credit in Bank of Bengal on 31st July 1902 ...	Rs. A. P. 438 2 8
Opening cash balance on that date	673 9 7	Cash balance in hand on that date	158 11 9
	3,447 10 3		596 14 5
Total ...	51,951 9 10	Total ...	51,951 9 10

CALCUTTA,
The 13th August 1902.

K. MALLIKA,
Accountant.

H. S. CASHMAN,
Secretary.

Statement of the Affairs of the Bank of Bengal for the week ending 25th August 1902.

LIABILITIES.

	Rs.	A. P.
Capital paid up	2,00,00,000	0 0
Reserve Fund	1,14,00,000	0 0
Public Deposits at Head Office ... ... Rs. 60,83,851 1 9		
Ditto ditto at Branches ,, 1,16,24,966 3 8	1,77,08,817	5 5
Other Deposits at Head Office and Branches...	8,65,01,226	10 3
Bank Post Bills, &c.	4,18,958	5 5
Sundries	14,03,209	2 8
Rupees ...	13,74,27,211	7 9

ASSETS.

	Rs.	A. P.
Government Securities	1,58,59,960	0 0
Other authorised investments	67,81,670	0 0
Loans on Government and other authorised securities	2,52,01,113	13 5
Accounts of Credit on ditto ditto ...	1,52,24,704	5 3
Bills discounted and purchased	1,94,87,385	10 11
Balances with other Banks	18,48,387	1 5
Bullion	.....	
Dead Stock	16,03,103	7 1
Stamps	12,834	0 11
Sundries	8,56,878	3 7
	8,68,76,036	10 7
Cash and Currency Notes at Head Office* ... ... Rs. 2,52,70,327 12 7		
Cash and Currency Notes at Branches† ,, 2,52,80,847 0 7	5,05,51,174	13 2
Rupees ...	13,74,27,211	7 9

* Includes Govs. & ½ Govs., value Rs. 1,62,205 0 0
† Do. do. do. ,, 1,50,097 3 0
Rs. 3,12,302 3 0

By order of the Directors,
W. D. CRUICKSHANK,
Secretary and Treasurer.

E. J. BIRCH,
Chief Accountant.

Rate for Demand Loans, 3 per cent.
Percentage 47·67.

BANK OF BENGAL,
Calcutta, the 28th August 1902.

(601—1)

SURVEY OF INDIA.

Rules for the supply of printed maps.

THE following rules are published in supersession of those published in Part II of the *Gazette of India* of the 13th February 1894. Special attention is directed to the regulation regarding cash payments in rule I :—

1. The Map Record and Issue Office, Calcutta, supplies printed maps on the public service, on book-debit, when the value exceeds Rs. 50, and on cash payment when up to that value. It also arranges for the colouring and mounting of maps when required. All charges for freight and postage of parcels must be borne by applicants themselves. Incidental charges for colouring, mounting, and binding maps, and for packing cases are included in the bills submitted by this office. When accounts are settled by book-debit, the rules as to the disposal of the duplicate and triplicate copies of the invoice, printed thereon, must be strictly adhered to. Cash payments include payments by Money Order Remittance Transfer Receipts, and Cheques (not crossed) on European Banks in Calcutta. Hundis and Receipts for payment into Treasuries are *not* accepted, but postage labels of the value of half or one anna are accepted for bills not exceeding one rupee in amount.

2. Maps can also be obtained by the general public from the abovementioned office on pre-payment, as well as from the following Local Agents, who, however, have no authority to issue maps on the public service except *on cash payment* :—

1. LONDON.—Mr. Edward Stanford.
2. CALCUTTA.—No agent. Maps can be obtained from the office, 13 Wood Street.
3. ALLAHABAD.—Superintendent, Government Press.
4. ASSAM.—Babu J. N. Barua, Debrugarh.
5. BOMBAY.—Messrs. Thacker & Co.
6. LAHORE.—Rai Sahib Munshi Gulab Singh & Sons.
7. MADRAS.—Messrs. Higginbotham & Co.
8. MANDALAY.—Manager, "Mandalay Herald Press"
9. MUSSOORIE.—Secretary, Musooree Book Society, Baring Institute.
10. POONA.—Superintendent, Government Photozincographic Department.
11. RAJKOT.—The Treasury Officer.
12. RANGOON.—Messrs. Myles, Standish & Co.
13. SIMLA.—Messrs. Cotton & Morris, The Exchange.

3. All applications for printed maps on the public service should be made to the Officer in charge of the Map Record and Issue Office, 13 Wood Street, Calcutta, and should give *full* and *clear* particulars as to the kind of map required and its scale; and any other information that will guide that office in knowing exactly what is required.

4. The mode of transit and address, or station to which the maps are to be sent, should invariably be specified. *All* addressees should be *clearly* written.

5. Indent forms for maps on the public service can be obtained from the Officer in charge of the Map Record and Issue Office.

6. Lists of all newly published maps are periodically notified in the *Gazettes of India* and Local Governments.

7. Indents for printed maps on the public service must be approved and countersigned by one of the undermentioned duly authorised officers, or by the Secretaries to Government under whom the indenting officer may be serving, before they can be complied with, viz.—

Survey of India Dept., Trigl. Branch,		by Supdt., Trigl. Surveys.
Ditto,	Top. do.,	„ Dy. Surveyor-Genl. } or by Surveyor-Genl.
Ditto,	Rev. do.,	„ ditto }
Public Works Department	...	„ Supdg. Engrs. or higher authorities.
		„ Superintendent of Works, Famine Relief Circles.
Telegraph Department	...	„ Provincial Supdts. or higher authorities.
Postal Department ...	...	„ Ditto Postmasters-Genl., Dy. P. M. G., Inspector-General, Railway Mail Service, or higher authorities.
Police Department ...	...	„ Provincial Inspectors-General.
Jails	...	„ Inspector-General of Prisons.
Army Department ...	...	„ Quartermaster-General.
		„ General Officers Commanding Districts.
		„ Lieut.-Generals Commanding the Forces in the Punjab, Bengal, Bombay, and Madras.
		„ Military Secretary to Commander-in-Chief.
		„ Secretary to Defence Committee.
		„ Inspector-General, Royal Artillery.
		„ Inspector-General, Imperial Service Troops.
		„ Inspector-General of Cavalry.
		„ Director, Army Remount Department.
		„ Director of Military Education.
		„ Secretary, Mobilization Committee.
		„ Adjutants-General and Dy. Adjutants-General.
		„ Commissaries-General.
		„ Commissary-General-in-Chief.
		„ Accountant-General.
		„ Superintendents of Army Clothing, Bengal and Madras.
		„ Controllers of Military Accounts, Eastern and Western Circles, Bengal.
		„ Chief Engineers of Commands, Military Works Department.
		„ Director-General of Ordnance.
		„ Inspectors-General of Ordnance.
		„ Principal Veterinary Officers in India.
Accounts Department ...	...	„ Comptroller and Auditor-General.
Marine Department ...	...	„ Comptrollers and Accountants-General.
		„ Director or Deputy Director, Indian Marine.
Medical Department ...	...	„ Surgeon-General with the Govt. of India.
		„ Administrative Medical Officer, Central Provinces.
		„ Principal Medical Officer, H. M.'s Forces.
		„ Principal Medical Officers with Local Governments and Administrations.
		„ Surgeon-General with the Governments of Madras and Bombay.

Political Department ...	...	by Political Agents, Genl. Supdt. of Operations for the Suppression of Thagi and Dacoity, or higher authorities.
Forest Department ...	...	„ Provincial Conservators and Deputy Conservator of Forests* (1). „ Director of Forest School at Dehra. „ Superintendent, Forest Surveys.
Archæological Department		„ Director-General of Archæology in India.
Geological Survey Department	...	„ Director, Geological Survey. „ Chief Inspector of Mines in India.
Meteorological Department	...	„ Meteorological Reporter to the Government of India.
Civil Veterinary Department	...	„ Inspector-General.
Opium Department ...	...	„ Opium Agents.
Educational Department	...	„ Directors of Public Instruction.
Revenue Officers	...	„ Reporter on Economic Products to the Government of India. „ Commissioners of Divisions* (2). „ Settlement Commissioners. „ Commissioner of Northern India Salt Revenue. „ Commissioner of Excise, Bengal. „ Directors of Land Records and Agriculture.
Judicial Officers ...	...	„ District and Sessions Judges. „ Registrar, High Court, U. P., Agra and Oudh and Bombay.
All other Civil Officers or Military Officers in Civil employ.		„ Secretaries to Government or Board of Revenue under which serving.
Agricultural Department	...	„ Agricultural Chemist to the Government of India. „ Inspector-General of Agriculture in India.

8. Power is reserved to the Surveyor-General to refer to the Local Government for orders any indent brought to his notice by the Officer in charge of the Map Record and Issue Office which may appear to him to require such reference, or to refuse compliance with any indent which he may consider unreasonable.

CALCUTTA;
The 1st November 1901.

ST. G. C. GORE, COLONEL, R E.,
Surveyor-General of India.

* NOTE.—Includes (1) The Principal Forest Officers in Coorg, the Andamans, and Baluchistan, and (2) the Commissioner of Ajmer-Merwara in Ajmer.

NOTIFICATION.

In the Court of the Subordinate Judge of Monghyr.

TITLE EXECUTION CASE No. 212 OF 1902.

Nawab Dildar Ally Khan, decree-holder, *versus* Khaja Mohamad Gowhar Ally Khan, &c., judgment-debtors.

NOTICE is hereby given that the following properties will be sold in the above case by the Nazir of this Court at 12 o'clock on the 8th September 1902, the right, title and interest of the judgment-debtors in the following properties:—

Serial No.	Description of properties.	Tauzi No.	Jama sadar	Approximate value stated by the decree-holder.
			Rs. a.	Rs.
	Four annas share out of 16 annas in mahal Islamnagar, Manikpur, Amba Jhajhra, Abunagar, *aslee* and *dakhlee*, pargana Samai, in district Monghyr.	4069	4,266 11	5,000

TARA PRASONNO BANERJEE, Subordinate Judge.

Monghyr, the 28th August 1902.

(606—1)

Pure Sulphate of Quinine.

MANUFACTURED AT THE BENGAL GOVERNMENT CINCHONA PLANTATION

FROM 1st April 1902 the price of this quinine will be as follows:—

1	Pound tin	Rs.	17,	or, post free,	Rs.	17-8
½	"	"	"	8-8	"	"	"	"	8-14.
¼	"	"	"	4-4	"	"	"	"	4-10

Analysis shows this quinine to be of the purest manufacture; and it is guaranteed to be free from wilful mixture with the inferior alkaloids, cinchonine and cinchonidine. It is for sale only to Government officers, and only for cash, and may be had from the Superintendent, Botanic Garden, Sibpur, near Calcutta.

Cinchona Febrifuge.

Cinchona Febrifuge can be purchased by all Government officers and by any one taking *six pounds* and upwards at a time from the Superintendent, Botanic Garden, Calcutta, for cash only at the following rates—

	Government officers.	General public.	Postage extra.
	Rs. A.	Rs.	As.
1 Pound tin ...	10 0	12	8
½ " " ...	5 0	6	6
¼ " " ...	2 8	3	4

BABU NAGENDRA NATH MITRA, B.A., B.L., intends to enrol himself as a Vakil of the High Court, Bengal.

(546—4 - 10)

WANTED an Overseer for the Deoghur Municipality on Rs. 50 per month, including allowances.

None need apply who is not qualified under the rules and does not possess good health.

Applications will be received up to 15th September 1902.

GIRIS CHANDRA NAG,
Vice-Chairman, Deoghur Municipality.

Deoghur, the 19th August 1902. (583—2)

WANTED a permanent Sharishtadar for the Court of the First Subordinate Judge of Gaya on a salary of Rs. 50 rising to Rs. 70. He must possess thorough knowledge of Civil Court business and of Hindi, Urdu, and English. Graduates will be preferred.

Applications will be received till 20th September.

C. W. E. PITTAR, District Judge.

Gaya, the 28th August 1902.

Wanted

A DRAFTSMAN on pensionable establishment at Rs. 55 per month rising to Rs. 85 by five annual increments of Rs. 6 each; also an Estimator on pensionable establishment. Salary Rs. 75 per month fixed.

Only first class men who can prepare drawings and estimates from notes and instructions need apply, sending specimens of their drawings and copies of testimonials, which latter will not be returned.

Applications will be received by undersigned up to 15th September 1902.

C. A. WHITE,
Offg. Supdg Engr., Orissa Circle.

Cuttack, the 29th August 1902.

Notice.

WANTED an experienced Overseer for the District Board, Hooghly. Pay Rs. 60 to Rs. 80 by biennial increment of Rs. 4 *plus* horse allowance of Rs. 30. Candidates must possess qualification under rule 7 (1) of the Government Notification No. 3334L S.-G., dated 20th December 1901. Applications with copies of testimonials will be received by the undersigned up to 10th September 1902. Selected candidate will have to join at once.

M. N. BAGCHI,
District Engineer, Hooghly.

Chinsurah, the 19th August 1902. (581—2)

Notice.

WANTED a Tax-Daroga for the Ranchi Municipality on Rs. 25 with a commission of 2 annas for every distress warrant personally executed by the Tax-Daroga.

Applications with copies of testimonials will be received by the undersigned till 10th September 1902. Candidates possessing official experience will be preferred.

He should furnish security for Rs. 200 in cash or Post Office pass-book.

SARODA KUMAR AIKATH,
Vice-Chairman, Ranchi Municipality.

Ranchi Municipal Office, the 18th August 1902. (584—2)

Notice.

WANTED at once a Sub-Inspector of Schools on a salary of Rs. 40 and travelling allowance admissible under the rules of the Civil Service Regulations subject to maximum of Rs. 25 a month, and six Inspecting Pandits on a salary of Rs 20 *plus* consolidated allowance of Rs. 10 a month each. Candidates for the Sub-Inspectorships must be qualified under the rules published under Bengal Government Notifications No. 486T.G., dated 2nd September 1893, and No. 105T.G., dated 24th May 1899, and must submit with the applications all the necessary certificates. Candidates for the posts of Inspecting Pandits must be ex-students of first grade training schools and must know English. They must be below 25 years of age and must produce certificates of health and good moral character. Qualified Muhammadan candidates will have preference. Applications with copies of testimonials will be received by the undersigned up to the 7th proximo.

W. N. DELEVINGNE, Chairman.

Jessore District Board, the 18th August 1902. (582—2)

Notice.

WANTED a Statistical Clerk for the Office of the Director of Land Records and Agriculture, Bengal. Pay Rs. 45 rising by biennial increments of Rs. 5 to Rs. 65 on approved work.

None need apply who has not passed the B.A. examination in the "B" Course and is not strong in Mathematics.

The selected candidate will have to stick to the appointment for at least five years.

Applications with copies of testimonials should reach the undersigned by the 10th September 1902.

C. G H. ALLEN, Offg. Director of the Department of Land Records and Agriculture, Bengal.

Writers' Buildings, Calcutta, the 25th August 1902.

Notice.

WANTED an Overseer for the Sadar subdivision under the District Board of Noakhali. Pay Rs. 70 and horse allowance Rs. 15 a month (he must keep a pony or a bicycle).

Candidates must possess qualifications under rule 7 (1) of Government Notification No. 3334L.S.-G., dated 20th December 1901, and have experience in building works.

Applications with copies of testimonials will be received by the undersigned up to 15th September 1902.

The selected candidate must join at once on receipt of appointment letter.

H. F. E. B. FOSTER, Chairman.

Noakhali District Board's Office, the 25th August 1902. (602—2)

Notice.

WANTED an Engineer on a salary of Rs. 100 per mensem with free quarters. He will be chiefly in charge of the Raj Rajeswari Water-works. The applicants should state their age and native place, and produce certificates of health, character, and qualifications. Applications will be received up to 15th of September 1902.

SHAMA CHARAN RAY, Chairman,
Nasirabad Municipality, Mymensingh.

Mymensingh, the 31st August 1902. (611—2)

Notice.

SEALED TENDERS for the conveyance of import, export and other Government stores, and for labour and the hire of boats for two periods—one of 1 year 3 months, from 1st January 1903 to 31st March 1904, and one for 3 years 3 months, from 1st January 1903 to 31st March 1906—will be received by the Agent for Government Consignments, Calcutta, up to noon on Friday, the 3rd October 1902.

Tenders should be superscribed "Tender for carrying contract for one year and three months" and "three years and three months," as the case may be.

Tenders must be prepared on forms to be obtained with full particulars from the undersigned on payment of one rupee for each form.

No tender will be received except on the prescribed form, and no additions or alterations must be made on the tender form.

Tenders must be supported by a Bank of Bengal or Treasury receipt for Rs. 700 as earnest-money. The earnest-money to be forfeited in the event of a tender withdrawn No tender will be received without a deposit of this earnest-money.

Tenders will be opened at noon on Friday, October 3rd, 1902, at No. 5 Strand Road, in the presence of tenderers by the undersigned, who does not bind himself to accept the lowest or any tender.

H. J. PATERSON, LIEUT., R.N.R.,
Offg. Agent for Govt. Consignments.

Calcutta, the 25th July 1902.

Notice.

List of unclaimed goods lying in the Custom House Wharf.

Vessels.	Marks and Nos.	Description of packages.	REMARKS.
S.S. "Orissa" ...	M M & Co ...	1 Case ...	Unknown.
" "Islanda" ...	P R, bottom A or Nil.	2 Bundles coir yarn.	
" "India" ...	W M H or Nil ...	2 Casks ...	Unknown.
" "Henzada"	G. Morrison & Co., 4, Hastings Street.	1 Crate ...	"
" "Kerbella"...	C D J ...	1 Bag cowries.	
" "Okhla" ...	M A	4 Casks cocoanut-oil.	
" "Scindia" ...	M V in diamond, Port Elizabeth.	1 Bale coir fibre.	
" "Umquizi"	Nil	1 Bag salt fish.	
" "Chelydra"	202 top, S.S. in block.	1 Case ...	Unknown.
" "Kumsang"	Nil	1 Basket earthenware.	Broken.
" "Suisang" ...	Nil	1 Box empty bottles.	"
" "Kumsang"	S or Nil	1 Case empty bottles.	
" "Sunda" ...	A. S. Constantide	1 Chair	Cane.
" "A. Apear"...	C. T. Dept.	1 "	
" "Goorkha"...	M. L. Westmacott	1 Trunk	Unknown.
" "Mussilia" ...	Nil	1 Bath tub ...	Zinc.
" " ...	Cantn. Wood ...	1 Chair	Deck.
" " ...	Nil	1 "	"
" "Candia" ...	Stables	1 "	"
" "Malta" ...	H. Hamber ...	1 "	"
" " ...	H. Bridge ...	1 "	"
" " ...	L. Hicks ...	1 "	"
" " ...	Oliver ...	1 "	"
" " ...	G L R ...	1 "	"
" " ...	C. H. Stewart ...	1 "	"
" " ...	Nil ...	1 "	"
" " ...	Nil ...	1 "	"
" ...	C. F. Gordon ...	1 "	"
" "E. F. Ferdinand."	H. Bonckel ...	1 "	"
" "	A. Voigt ...	2 Chairs	Cane.
" "Matian" ...	Miss Elkington ...	1 Case	Own.
" "Mussilia" ...	Bell	1 Bundle, 4 chairs.	
" "Pentakotta"	O. H. Elliott ...	1 Gun.	
" "	W. Wright ...	1 "	
" "Umta" ...	Hary Ram Sing ...	1 Sword.	
" "Madura" ...	Dr. Graham ...	1 Revolver.	
" "Workman"	A in diamond, top GA, bottom & Co., No. 3.	1 Case Revolver.	
" "	717 in inverted triangle, bottom M & Co., Nos. 9 3-4.	2 Cases Gun.	
" "Obra" ...	F in diamond ...	1 case dry fruits	Broken.
" "Eleora" ...	C G W ...	4 bundles wood.	
" " ...	N B ...	1 bundle chillies.	
" "Kumsang"	M M G in diamond	1 bag betel-nuts.	
" "Suisang" ...	M M G ...	1 " "	
" " ...	M M G ...	6 bags sago flour.	

The above will be sold if not cleared on or before the 5th September 1902.

L. F. MORSHEAD, Collector of Customs.

Calcutta, Custom House, the 19th August 1902.

Notice.

THE Government of Bengal, on the recommendation of the Port Commissioners, have sanctioned, under section 33 of the Port Commissioners' Act, IV (B C.) of 1887, the levy of a charge of Rs. 3 per diem for the use of each wire hawser and shackle supplied to vessels for mooring purposes.

R. S. GREENSHIELDS,
Chairman of the Port Commissioners.

Chittagong, the 21st August 1902. (592—3)

NOTICE.

Bank of Bengal.

THE Directors have appointed Mr. C. W. W. Carbery to act as Agent at Lahore during the absence of Mr. N. H. Y. Warren on short leave.

By order of the Directors,
W. D. CRUICKSHANK, Secretary and Treasurer.

Calcutta, the 22nd August 1902. (599—1)

Treasure Trove Notification.

IT is hereby notified, under section 5 of the Indian Treasure Trove Act, VI of 1878, that on the 22nd September 1901, a treasure, consisting of the undermentioned articles, valued at Rs. 42, was found in a pit in the earth in a path poramboke, Paimash No. 46, near Dombacheri tank in Dombacheri village, Dombacheri subdivision, Bodinaickanore zamindari, Periakulam taluk, Madura district.

2. All persons claiming the treasure or any part thereof are hereby required to appear personally or by agent before the Collector of Madura in his office at 12 o'clock on 1st September 1903 in view to the matter being enquired into and determined in accordance with the provisions of the Act.

List of property.

57 tolas of silver valued at Rs. 42.

A. G. CARDEW, Collector.

Madura Collector's Office, the 28th August 1902.

Notification

TO be peremptorily sold by the Registrar of this Court, pursuant to a decree made in suit No. 443 of 1899, Mussamut Mohari Bibee and another *versus* Kuppur Chand Johury, and dated the 18th day of April 1901, on Saturday, the 13th day of September 1902, in his sale-room in the Court-house, the undermentioned property of the defendant:—

List of moveable articles.

1. One piece of diamond, weighing about 40 ruttees or thereabouts.
2. One piece of diamond, weighing 140 carats or thereabouts.
3. One Goswara diamond, weighing 22 ruttees or thereabouts.
4. One uncut emerald, weighing 417 ruttees or thereabouts.
5. One uncut emerald, weighing 604 ruttees or thereabouts.
6. Two diamond necklaces, containing 56 pieces.
7. One pearl necklace, containing 40 pearls and 22 soojnee.
8. One diamond bina, containing diamond pearls and 9 soojnee.
9. One Sarasatee har made of diamond and pearls.
10. Two rows pearl necklace containing 34 pearls.
11. One bundle of panna, weighing 3,996 ruttees or thereabouts.

W. R. FINK, Registrar.

Manuel and Agarwalla, Attorneys.

Calcutta High Court, Original Side, the 27th day of August 1902. (600—1020—1)

Auction Sale of valuable landed property.

TO be sold in lots by public auction, unless previously disposed of privately and subject to conditions which will be produced at the time of the auction, at the Sheriff's sale-room in the High Court, Calcutta, on Wednesday, the 10th day of September 1902, by Jogi Lall Sunghania and Anant Ram Seraojee, Trustees under a deed of composition executed by Ram Prosad Sureka and others, at the hour of 12 o'clock noon, the undermentioned valuable properties, all of which are comprised in the said deed :—

Lot 1.—All that valuable Jute Press, known as "The Sulkea Jute Press," situate at Sulkea, in the district of Howrah, comprising a press-house and the usual buildings necessary for carrying on a jute-pressing business, together with all presses and machinery therein and the piece or parcel of land on which the same is erected, comprising an area of about 12 bigahs, more or less, and which piece of land is held on lease for a term of 50 years and 11 months, from the 24th of May 1893, at an annual rental of Rs. 2,400, and is bounded and butted as follows :—On the north by Mookhopadhya Ghat Road and a public drain, on the south by the land and Nayan Joolie of Ranee Hurry Sundery Dabee, on the west by the Old Ghoosery Road, and on the east by the River Hooghly. The above is in full working order and is fitted with electric light and will be sold as a going concern.

Lot 2.—All that the house and premises known as No. 9 Juggo Mohun Mullick's Street, in the town of Calcutta, together with the piece or parcel of land thereunto belonging and on part whereof the same is erected and built, containing by estimation 1 bigha and 10 cottahs, be the same a little more or less, and bounded on the north by the premises No. 8 Juggo Mohun Mullick's Street, on the east by Juggo Mohun Mullick's Street, on the south partly by the premises No. 78 Burtolla Street and partly by the premises No. 79 Burtolla Street, and on the west by a filled up drain. The annual Government revenue payable in respect of the said premises is Rs. 2-10-6.

Lot 3.—All those brick-built extensive godowns in Ghoosery Road, together with the leasehold interest in the land thereunto belonging and on part whereof the same are erected and built, containing by estimation 1 bigha 11 cottahs and 14 chitaks, be the same a little more or less, situate at Sulkea, in the district of Howrah, and known as the premises No. 35 Ghoosery Road, and bounded on the west by the Ghoosery Road, on the south by the land of Jogunnath Sing, on the east by the River Hooghly, and on the north by the lot 4.

The said land is held under a lease for a term of 13 years, expiring at the end of Kartick 1314 B. S., at an annual rent of Rs. 500.

Lot 4.—All that leasehold interest in the land, containing by estimation 3½ bighas, be the same a little more or less, situate at Sulkea, in the district of Howrah, and known as the premises No. 37 Ghoosery Road, butted and bounded on the north by the road leading to the bathing ghat and wall belonging to Rani Hurry Sundery Dabee, on the south by the premises described in lot 3, on the west by the road leading to the tank belonging to the Mujid Debutter estate and the timber yard of Koorisujee Hooja, and on the east by the River Hooghly. The said land is held under a lease expressed to be for a term of 13 years, expiring at the end of Kartick 1314 B S., at an annual rent of Rs. 549-12.

Lot 5.—All that piece or parcel of land situate at Lillooah, in the district of Hooghly, comprising by estimation 26¼ bigahs, more or less, upon part whereof a house is erected or built, known as the Lillooah Garden house of Bissendyal Hurdyal, and bounded and butted as follows :—On the south by the main road to Lillooah, on the west by the Railway line, on the east by the road to Bollore, and on the north by the land of Nabin and Nemy.

About 16 bigahs of the above property are lakhraj and the remainder are held under mourasi lease at an annual rental of Rs. 36-3.

Lot 6.—All that leasehold interest in the house and premises known as No 43 Armenian Street, in the town of Calcutta, together with the piece or parcel of leasehold land thereunto belonging and on part whereof the same is erected and built, containing by measurement 14 cottahs, more or less, bounded on the south by Armenian Street, on the north by No. 17 Armenian Street, on the west by No. 44 Armenian Street, and on the east by No. 42 Armenian Street. The above property is held on a lease for a residue of a term of 18 years and nine months from the 13th Jait 1299 (27th May 1892) at a rental of Rs. 166-10-6 per month. The municipal tax payable in respect of the said premises is Rs 165-13-7 per quarter.

Lot 7.—All that the leasehold interest in the three-storied house and premises known as No. 34 Armenian Street, in the town of Calcutta, together with the piece or parcel of leasehold land thereunto belonging and on part whereof the same is erected and built, bounded on the north by premises No. 69-5 Cross Street, on the east by premises No. 33 Armenian Street, on the south by Armenian Street, and on the west by premises No 35 Armenian Street.

The above is held under a lease for a term of 20 years, from the first day of June 1898, at a monthly rental of Rs. 255 per month. The municipal tax payable in respect of the above premises is Rs. 142-2-6 per quarter.

The house is at present unoccupied, but has been letting for Rs. 620 a month. The godowns attached to the property are let at Rs. 200 a month.

Lot 8.—All that the leasehold interest in the partly two- and partly three-storied house and premises known as 84 Radha Bazar, in the town of Calcutta, bounded as follows :—On the north by premises No. 80 Radha Bazar Street, on the east by Radha Bazar Street, on the south by premises No. 91 Radha Bazar Street, and on the west by Swallow Lane.

The above property is held under a lease for a term of 16 years, from the first day of May 1896, at a monthly rent of Rs. 65, the tenant paying the ordinary occupier's share of rates, amounting to Rs. 24 6 per quarter.

All further particulars regarding the above properties and copies of the conditions of sale can be obtained on application at the office of Messrs. Morgan & Co., Solicitors, No. 1 Hastings Street, Calcutta.

(585—1—1017)

Notification.

TO be peremptorily sold, pursuant to a decree and an order of the Calcutta High Court made in suit No. 812 of 1897 (Radhaprasad Dhur *versus* Sreemutty Surnomoyee Dasi and others), and dated, respectively, the 20th day of June 1898 and the 7th day of February 1902, by the undersigned in the sale-room of the Registrar of the said High Court in its Original Side on Saturday, the 6th day of September 1902, at 12 o'clock noon, the following properties :—

Lot No. 1.—The undivided three-fifths share of the defendants Sreemutty Surnomoyee Dasi, Mohendrolall Mullick and Nripendrolall Mullick in No 285 Bowbazar Street (subdivided into Nos 285 to 285-13) in the town of Calcutta, being a partly one-storied and partly two-storied brick-built tenanted house, together with the piece or parcel of land or ground thereunto belonging and on part whereof the same is erected and built, containing by estimation one bigha and three chitaks, be the same a little more or less, constituting Holding No. 35, Block No. IV, North Division of the said town of Calcutta, paying an annual revenue to Government of Rs. 7-8, and now or lately butted and bounded in the manner following, that is to say, on the north partly by No. 284 and partly by No 288 Bowbazar Street and partly by No. 13 Chattawalla Gullee, on the south partly by the public road called Bowbazar Street and partly by No. 284 Bowbazar Street, on the east by No. 284 Bowbazar Street, and on the west partly by No. 288 and partly by No. 286 Bowbazar Street.

Lot No. 2.—The right, title, interest and claim of the defendant Sreemutty Surnomoyee Dasi under the decree dated the 1st September 1893 in suit No. 85 of 1893 (wherein the said Sreemutty Surnomoyee Dasi was plaintiff and Bissessur Dass Puglia was defendant).

Lot No. 3.—The undivided one-fifth share of the defendant Mohendrolall Mullick in No. 92 Phear's Lane in Calcutta, being a two-storied brick-built house, together with the piece or parcel of land thereunto belonging and on part whereof the same is erected and built, containing by estimation five cottahs six chitaks and eighteen kutchas, be the same a little more or less, comprising, together with the premises Nos. 91 and 91-1 Phear's Lane, Holding No. 49, Block IV, N. D., and paying an annual Government revenue of Re. 1 pies 3 for the entire holding, and butted and bounded in the manner following, that is to say, on the north by the

premises No. 91-1 Phear's Lane, on the south by Chattawalla 1st Lane, on the east by the public road, called Chconam Gullee or Phear's Lane, and on the west by Chattawalla 1st Lane.

Lot No 4.—The undivided one-fifth share of the defendant Nripendrolall Mullick in the said premises No. 92 Phear's Lane last hereinbefore fully described.

Lot No. 5.—The undivided one-fifth share of the defendant Mohendrolall Mullick in No. 91-1 Phear's Lane in Calcutta, being a two-storied brick-built house, together with the piece or parcel of land thereunto belonging and on part whereof the same is erected and built, containing by estimation 2 cottahs, be the same a little more or less, and bounded on the north by the dwelling-house of Lakhmi Narain Dutt, on the south by the family dwelling-house of Amrito Lall Mullick and others, on the east by the public road called Phear's Lane, and on the west by the public road called Chattawalla Gullee 1st Lane.

Lot No. 6—The like undivided one-fifth share of the defendant Nripendrolall Mullick in the said premises No. 91-1 Phear's Lane fully described above.

Lot No. 7.—The undivided one-fifth share of the defendant Mohendrolall Mullick in Nos 18, 19, 20 and 21 Chattawalla Gullee in Calcutta, being all that lower-roomed brick-built house together with the piece or parcel of land thereunto belonging and on part whereof the same is erected and built, containing by estimation eight cottahs and thirteen chitaks, be the same a little more or less, Holding No. 82, Block IV, N. D., and butted and bounded in the manner following, that is to say, on the north by Nos. 3 and 4 Tiretta Bazar Street, on the south by the public road called Chattawalla Gullee, on the east by Raja Kamal Krishna's Lane, and on the west by Tiretta Bazar Street, paying an annual revenue to Government Re. 1 12 annas.

Lot No. 8.—The like undivided one-fifth share of the defendant Nripendrolall Mullick in the said premises Nos. 18, 19, 20 and 21 Chattawalla Gullee in Calcutta, fully described above.

The abstract of title and conditions of sale may be seen at the office of Babu Aghore Nath Chunder, Attorney for the plaintiff, at No. 2 Hastings Street in Calcutta, or at the office of the undersigned at the Court-house on any day before the sale and will be produced at the sale.

W. R. FINK, Receiver.

A. N. Chunder, Plaintiff's Attorney.

High Court, O. S., dated the 2nd day of August 1902.

(508—1—1019)

NOTICE.

In the 1st Court of the Munsif of Alipore.

EXECUTION CASE No. 968 OF 1902.

Raj Coomar Sarkar and another, decree-holders, *versus* Ardha Ch. Roy Chaudhury and others, judgment-debtors of Panihati.

Amount of claim Rs. 1,037-2-6.

THE right, title and interest of the judgment-debtors in village Tardah and others, police-station Bhangore, sub-registry Sealdah, in village Gouripur, and others, being estate No. 172 of 24-Parganas Collectorate, bearing Government revenue of Rs. 9,983-3-1, are to be sold by the Nazir of the District Judge's Court, Alipore, 24-Parganas, on 8th September at 12 A.M. in the District Judge's sale-room.

BIPIN BIHARI CHATTERJI, Munsif of Alipore.

Munsif's Court, Alipore, the 29th August 1902.

(603—1)

NOTICE.

In the Court of the Subordinate Judge, 2nd Court, Bhagalpur.

MONEY EXECUTION CASE No. 28 OF 1902

Rai Kamlasri Parsad Singh Bahadur, of Kasba, Bari Bazar, in the town of Monghyr, *versus* Kumar Nityea Nand Singh, of Taranagar, pargana Habali, district Purnea.

TO be sold in the above case by the Nazir of the District Judge's Court, Bhagalpur, at 12 A.M., on the 3rd November 1902, the properties detailed below for realisation of the judgment-debt, amounting to Rs. 17,933-12:—

Schedule of properties to be sold.

I. Two annas eight pies out of 16 annas of mauza Unbiahi, asli and dakhli and kamat lands, appertaining to mahal Dhaphar, pargana Dhaphar, thana Partapganj, sub-registry Partapganj, T. No. 3843, and jama sadar of entire mahal Dhaphar is Rs. 20,353-6; estimated value given by decree-holder is Rs. 2,000.

II. Two annas eight pies out of 16 annas of mauza Arraha, asli and dakhli, with kamat lands, appertaining to mahal Dhaphar, pargana Dhaphar, thana Partapganj, sub registry Partapganj, T. No. 3843, and jama sadar of entire Dhaphar is Rs. 20,353-6; estimated value given by decree-holder is Rs. 1,000.

Decree-holder has filed a verified petition stating that the above two properties along with other properties are mortgaged to Kumar Kala Nand Singh and Kumar Kirtya Nand Singh, for which they have obtained a mortgage decree No. $\frac{1}{3}$ of 1902, dated 11th March 1902, for Rs. 4,57,159-12-6.

MOTI LAL HALDER, Subordinate Judge, 2nd Court.

Bhagalpur, the 29th August 1902. (606—1)

In the 1st Court of the Subordinate Judge at 24-Parganas.

SALE NOTIFICATION.

EXECUTION CASE No. 98 OF 1902.

Sreemutty Barno Coomari Devi, decree-holder, *versus* Surendra Nath Ghose, judgment-debtor.

THE undermentioned properties of the judgment-debtor will be sold at public auction in the said execution case by the Nazir of the District Judge's Court at 12 o'clock on Monday, the 8th September 1902, in the District Judge's sale-room at Alipore:—

Schedule of properties.

In the Collectorate of Backergunge and Registration District of Backergunge—

(1) Eight annas share of the taluk or estate No. 1730 called Dayaram Dhoniram,

(2) Of the taluk or estate No. 1745 called Madan Mahan Ghose,

(3) Of the taluk or estate No. 3205 called Doardani Khanum,

(4) Four and half annas share of the estate or taluk, No 2048 called Rabi Lochan and Kriti Chunder Das,

all of the Backergunge Collectorate, situated in mauza Kajole Kalika Shairchawk and Chota Kajole, thana and Sub-Registry station Golachipa, pargana Chandradwip, Rahimnagar, Rampur taraf.

Sadar jamas of the whole estates are (1) Rs. 322-5-4, (2) Rs. 222 5-4, (3) Rs. 119-4-6, (4) Rs. 1,846-10-8 yearly, respectively.

Approximate values are (1) Rs 2,000, (2) Rs. 2,000 (3) Rs. 200, (4) Rs. 200, respectively.

X. (5) Eight annas share in that zamindari or taluk No. 4556 called Bara Bighai, ossat taluk Jagadamba, thana and Sub-Registry station Goolshikali, pargana Arangpore. Present jurisdiction is in thana Amtoli.

Annual Government revenue of the estate is Rs. 1,478-0-10. Estimated value is Rs. 1,000.

XI. (6) Eight annas share of the estate or taluk No. 4554 standing in the name of Golak Nath Ghose, situated in kismat Kabunia, mauza Bighai Peraibunia and Kiabunia, pargana, thana and Sub-Registry as in the above.

Annual sadar jama of the whole estate is Rs. 1,320-1-3. Estimated value is Rs. 500.

(7) Eight annas share of the estate or taluk No. 4728 called Golak Nath Ghose, kismat Chasaribunia, mauza as in the above, thana and Sub-Registry station Goolshikhali.

Annual Government revenue of the whole estate is Rs 462-12-5. Estimated value is Rs. 200.

XII. (8) Eight annas share of the excess of land in taluks Nos. 6474, 1730, 1745 in mauza Kajole, Kalirchawk, Shibairchawk and Chota Kajole, thana and Sub-Registry Golachipa, pargana Chandradwipa.

Annual sadar jama Rs. 1,138-4-9, Rs 1,164 and Rs. 1,294, respectively. Estimated value Rs. 500.

Incumbrance.—The eight annas share of some of the above properties whose numbers are 4556, 4554, 1730 and 1745, belonging to the judgment-debtor Surendra Nath Ghose, were previously mortgaged to Srimati Saroda Sundary Chowdhurani for Rs. 12,000. This mortgage was redeemed by Babu Lal Behari Mitter, deceased, at Rs. 18,560-9, but the above Saroda Sundary Chowdhurani being dissatisfied with the amount of interest allowed to her by the Lower Court, preferred an appeal to the Hon'ble High Court for Rs. 6,080, and that appeal is still pending and is numbered 119 of 1900.

KALI KUMAR BOSE, Sub-Judge, 1st Court, Alipore.

Alipore, the 25th August 1902. (604—1)

INSOLVENT NOTICES.

In the Court for the Relief of Insolvent Debtors at Calcutta.

In the matter of HANOOTHRAM LOHEA, an insolvent.

Notice that an application for an *ad-interim* protection order has been this day made by the said insolvent, and that such application will be heard and disposed of by the Acting Commissioner of the Insolvent Court on Monday, the 8th day of September instant, at the hour of 10-45 o'clock in the forenoon.

☞ Any creditor of the said insolvent desirous of opposing such application must appear before the said Court at the time and place aforesaid.

Kali Mohun Rakshit, Attorney. (608—1)

In the matter of BONOWARY LALL BOSE, an insolvent.

Notice that an application for an *ad-interim* protection order has been made by the said insolvent on the 30th day of August last, and that such application will be heard and disposed of by the Acting Commissioner of the Insolvent Court on Monday, the 8th day of September ins ant, at the hour of 10-45 o'clock in the forenoon.

☞ Any creditor of the said insolvent desirous of opposing such application must appear before the said Court at the time and place aforesaid.

C. A. Smith, Attorney. (609—1)

In the matter of CHOONI LALL DOODHOORIA and JESRAJ BOID, insolvents,

And

In the matter of THANMULL DHUDHURIA, an insolvent.

Notice that an application for an *ad-interim* protection order as regards the insolvent Thanmull Dhudhuria has been made by the said insolvent on the 1st day of September instant, and that such application will be heard and disposed of by the Acting Commissioner of the Insolvent Court on Monday, the 8th day of September instant, at the hour of 10 45 o'clock in the forenoon.

☞ Any creditor of the said insolvent desirous of opposing such application must appear before the said Court at the time and place aforesaid.

Fox and Mandal, Attorneys. (610—1)

Chief Clerk's Office, the 2nd day of September 1902.

NADIA RIVERS.

Report showing the least depths of water for the week ending Friday, the 29th August 1902.

Name of river.	Reach of river.	Least depth of water sounding.		REMARKS.
		Ft.	In	
Bhagirathi.	Entrance from Ganges	16	0	
	Thence to Giriah	9	0	Momintola.
	From Giriah to Jangipur	9	0	Nobokantapur.
	,, Jangipur to Berhampore	11	0	Margheri.
	,, Berhampore to Katwa	12	0	Mirzapur.
	,, Katwa to Nadia	17	0	Dafarpota.
Bhyrub-Jalangi.	Entrance from Ganges	15	6	
	Thence to Akriganj	19	0	Chakharpara.
	Akriganj to junction of the Bhyrub and Jalangi	15	6	Harharia.
	Thence to Patkabari	18	6	Lalnagar.
	Patkabari to Nadia	17	0	Rudranagar.
Matha-bhanga.	Entrance from Ganges	11	3	
	Thence to Dewanganj	12	0	Jamalpur.
	From Dewanganj to Shikarpur	12	6	Hakorah.
	,, Shikarpur to Boalia	13	6	Kadipur.
	,, Boalia to Chuadanga	14	3	Boalmari.
	,, Chuadanga to Kissenganj and Hanskhali	14	0	Krishnapur.

Gauge Readings

	Locality.	Date.	Hour.	Height above zero.	Height above mean sea level	REMARKS.
			A.M.	Ft.	Ft.	
Ganges	Jahebganj	29-8-1902	6	15·16	63·16	Fall.
	Rampur Boalia	30-8-1902	Noon	16·75	58·75	Do.
	Entrance of Bhagirathi Giriah	31-8-1902	A.M. 7	...	66 80	Do.
	Entrance of Bhyrub Jalangi					
	Akhriganj	31-8-1902	A.M. 7	...	57·10	Do.
Bhagirathi.	Entrance of Mathabhanga	29-8-1902	...	16 42	...	Do.
	Jangipur	31-8-1902	...	...	63·30	Do.
	Berhampore	1-9-1902	A.M. 10	19 25	53·00	Rise.
	Katwa	29-8-1902	P.M. 6	22 00	37·16	Fall.
Jalangi	Krishnagar	29-8-1902	...	16·58	...	Do.
Mathabhanga.	Sarupganj	29-8-1902	Noon	...	21·10	Do
	Hanskhali	30-8-1902	...	14 50	...	Do.

A. K. BANERJEE, *Accts.*,
For *Exe. Engr., Nadia Rivers Division.*
Berhampore, the 1st September 1902.

CALCUTTA POST OFFICE NOTICE.

Mails for—	Date and hour of closing at the General Post Office, Calcutta.		Route by which despatched.
	1902	P.M.	
United Kingdom, Aden, Egypt, Europe, America, West Africa *vid* United Kingdom and East Africa *vid* Aden (and also South Africa, if superscribed on the cover *vid* United Kingdom or Aden).	4th Sept.	At 6-30	Per P. & O. steamer from Bombay.
		Parcels P.M.	
Parcels and money-orders for the United Kingdom and other Foreign places.	3rd ,,	At 5 M.-O. P.M. At 4	Ditto ditto.
* Australasian Colonies ...	8th ,,	,, 7-30	*Vid* Tuticorin and Colombo.*
† Straits Settlements (also China and Japan, if the steamer's name is superscribed on the cover).	3rd ,,	,, 8-30	Per steamer *C. Apcar.*
Burma	4th ,,	,, 7-30	Per B. I. S. N. Co.'s steamer.
Burma, Penang and Singapore.	6th ,,	,, 7-30	Ditto ditto.
Akyab, Kyaukpyu and Sandoway.	6th ,,	,, 7-30	Ditto ditto.
Burma, Tavoy and Mergui ...	8th ,,	,, 7-30	Ditto ditto.
Port Blair	12th ,,	,, 7-30	Per steamer *Shahjehan.*

* Although the date entered in column 2 is, as far as can be calculated, the latest safe date of posting for the next Mail steamer, full allowance being made for the steamer being in advance of her published timing, Mails for the places mentioned in column 1 are despatched daily to Colombo, so that they may proceed by any steamer that has been unusually accelerated or retarded, or by any special opportunity that may be afforded by a steamer not belonging to one of the regular lines.

† Correspondence for China and Japan is despatched daily to Colombo, so that they may proceed by the first steamer available.

1. The letter-box for Inland articles will be cleared for the forenoon Mails at the following hours:—
   For Goalundo, Arakan and Chittagong, at 5-30 A.M.
   For Midnapore and Orissa districts, at 8-30 A.M.
   For the Eastern districts, as far as Dacca and Mymensingh, at 6-30 A.M.
   For Khulna and Jessore districts, at 7-30 A.M.
   For Bombay, Central Provinces and Midnapore, *vid* Bengal-Nagpur Railway, at 10-45 A.M., and with a late fee of ½ anna up to 11-35 A.M.

2. The letter-box will be cleared for the evening Mails at the following hours, viz.—
   For the East Indian Railway Loop Mail, at 2-30 P.M., and with a late fee of ½ anna up to 2-55 P.M.
   For the Northern Bengal, Darjeeling and Assam Mails, at 3-25 P.M., and with a late fee of ½ anna up to 3-50 P.M.
   For the Bombay Mail, *vid* Jubbulpore, at 6 P.M., and with a late fee of ½ anna up to 6-30 P.M.
   For the Punjab Mail, at 7-30 P.M.
   For Midnapore, Orissa and Madras Presidency, at 7-30 P.M. } and with a late fee of ½ anna up to 8 P.M. and
   For the Khulna Mail, at 7-30 P.M. } with a late fee of 1
   For the Eastern Bengal Mail, at 7-30 P.M. } anna up to 8-45 P.M.

3. Late registered letters will be received between the following hours:—
   For the Bombay Mail, *vid* Jubbulpore, from 5 P.M. to 6-15 P.M.
   For the Punjab Mail, from 6 P.M. to 7 P.M.
   For the Eastern Bengal Mail, from 6 P.M. to 7 P.M.
   For the Khulna Mail, from 6 P.M. to 7 P.M.
   For Midnapore, Orissa and the Madras Presidency, from 6 P.M. to 7 P.M.

   NOTE.—The late fee on each registered letter will be 2 annas which must be prepaid in stamps on the letter.

4. Articles for Burma and for Port Blair by sea are received without late fee up to 7-30 P.M., and with a late fee of ½ anna up to 8 P.M.

5. On the latest safe day of despatch of Mails for the Australasian Colonies or any other Foreign Countries, *vid* Madras or Tuticorin, the letter-box for Foreign articles will be cleared for the last time at 7-30 P.M., and late letters and papers fully prepaid will be received up to 8-45 P.M.

6. On the day of despatch of the Mail for Europe (Thursday), the letter-box for Foreign articles will be cleared for the last time, for articles, without the late fee, at 6-30 P.M., and late letters and papers fully prepaid will be received up to 6-45 P.M. Late registered articles will be received from 5 to 6 P.M. On other days the letter-box for Foreign articles will be cleared for the last time, without the late fee, at 6 P.M., and late letters any papers will be received up to 6-30 P.M. for despatch by and Foreign Mails, *vid* Bombay, the same night and up to 8-30 P.M., late letters and papers up to 9 P.M., for any Foreign Mails despatched by sea. Foreign Mails for despatch *vid* Madras or Tuticorin are received up to 7-30 P.M., and with a late fee up to 8-45 P.M. The late fee for Foreign articles is 4 annas, which must be prepaid in stamps affixed to the articles.

JOHN OWENS,
Presidency Postmaster.

CALCUTTA G. P. O.,
The 2nd September 1902.

GOVERNMENT PUBLICATIONS FOR SALE

BY THE SUPERINTENDENT OF GOVERNMENT PRINTING, INDIA, 8 HASTINGS STREET, CALCUTTA.

[A General Catalogue of all Government Publications may be obtained gratis from the Government Central Press, Calcutta.]

All books published by the Superintendent of Government Printing, India, can be purchased, either directly or through the following or any other booksellers:—

AGENTS IN INDIA.

Messrs. Thacker, Spink & Co., Calcutta and Simla.
Messrs. Newman & Co., Calcutta.
Messrs. Higginbotham & Co., Madras.
Messrs. Thacker & Co., Ld., Bombay.
Messrs. A J. Combridge & Co, Bombay.
Messrs. V. Kalyanarama Iyer & Co., Madras.
Messrs. D. B. Taraporevala, Sons & Co., Bombay.
Superintendent, American Baptist Mission Press, Rangoon.
Rai Sahib M. Gulab Singh and Sons, Mufid-I-Am Press, Lahore.
Manager, Educational Book Depôts, Nagpur and Jubbulpore.*
Manager of the Imperial Book Depôt, 63 Chandni Chauk Street, Delhi.*
Manager, "East Coast News," Vizagapatam.*
Manager, "The Agra Medical Hall and Co-operative Association, Limited" (Successors to A. John & Co.), Agra.*
Mr. T. K. Sectharama Aiyar, Kumbakonam.*
Lala Debi Prasad, Vakil and Manager of Law Press, Cawnpore.*

AGENTS IN EUROPE.

Mr. E. A. Arnold, 37 Bedford Street, Strand, London.
Messrs. Constable & Co., 2 Whitehall Gardens, London.
Messrs. Sampson Low, Marston & Co., St. Dunstan's House, Fetter Lane, London.
Messrs. Luzac & Co., 46 Great Russel Street, London.
Messrs. Kegan Paul, Trench, Trübner & Co., Charing Cross Road, London.
Mr. B Alfred Quaritch, 15 Piccadilly, London.
Messrs P. S. King and Son, 2 & 4 Great Smith Street, Westminster.
Messrs. H. S. King & Co., 65 Cornhill, London, are also Agents for the sale of the Indian Army List.
Mr. Otto Harrassowitz, Mr. Karl Hiersemann } Leipzig.
Messrs. R. Friedlander & Sohn, Berlin, N. W. Carlstrasse, 11.
Mr. Ernest Leroux, 28 Rue Bonaparte, Paris.
Mr. Martinus Nijhoff, the Hague, Holland.
Messrs. Williams and Norgate, Oxford.
Messrs. Deighton Bell & Co., Cambridge.

* Agents for sale of the Legislative Department publications.

NOTICE.—Books and Acts required for private use only can be purchased. Applications should be accompanied by a remittance, unless it is wished that the books should be sent by value-payable post, in which case, besides the ordinary postage, an additional charge is made for registration and commission.

Books and Acts required for the public service should be obtained through Local Governments to whom the applicant is subordinate.

Applications for Government publications which are no longer in print should be made to the Agents of the particular Government under whose orders they were originally issued.

The amounts within parentheses are for packing and postage

List of New Books published during the Current Quarter.

LEGISLATIVE DEPARTMENT.

List of General rules and orders under Statutes and General Acts in force in British India Corrected to 31st March 1902. Royal 8vo. Stitched. Re. 1 8*a*. or 2*s*. 3*d*. (8*a*.)
Madras Code. Third Edition, in two Volumes, 1901. Super-Royal 8vo. Cloth. Rs. 6 or 9*s*. (8*a*.) each.
The Indian Lunatic Asylums Act, 1858 (Act XXXVI of 1858), as modified up to 31st May, 1902. 5*a*. 6*p*. or 6*d*. (1*a*.)
The Agriculturists Loans Act, 1884 (Act XII of 1884), as modified up to 15th December, 1896, and with foot-notes brought down to the 1st June, 1902. 2*a*. or 3*d*. (1*a*.)
The Northern Indian Ferries Act, 1878 (Act XVII of 1878), as modified up to 1st June, 1902 6*a*. or 7*d*. (1*a*.)
The Indian Tariff Act, 1894 (Act VIII of 1894), as modified up to 30th June, 1902. 8*a*. or 9*d*. (1*a*.)

HOME DEPARTMENT.

Report on the Nature of Kala-Azar, by Major Ronald Ross, I.M.S. F'cap. Board Rs. 2 or 3*s* (3*a*.)
Report of the Indian Universities Commission will shortly be available on sale at the Government Central Press, Calcutta
Scientific Memoirs by Officers of the Medical and Sanitary Departments of the Government of India Standardisation of Calmette's Anti-Venomous Serum with Pure Cobra Venom. The Deterioration of this Serum through keeping in India by Captain G. Lamb, M.B., I.M.S., and Wm. Hanna, Esq., M.B., etc. New series, No. I. Super Royal 4to. Paper cover. 3*a*. or 4*d*. (1*a*.)

FINANCE AND COMMERCE DEPARTMENT.

List of Officers in the Finance and Commerce Department. Corrected to 1st May 1902. Royal 8vo Paper cover. 4*a*. or 5*d*. (1*a*.)
Statistics compiled from the Finance and Revenue Accounts of the Government of India. Receipts and Disbursements of Home and Indian Accounts from 1st April 1892 to 31st March 1900. F'cap. Board. Rs. 2 or 3*s*. (7*a*.)

STATISTICAL DEPARTMENT.

Review of the Trade of India in 1901-1902. F'cap. Paper cover. 8*a*. or 9*d*. (2*a*.)
Statistics of Cotton Spinning and Weaving in the Indian Mills in April 1902, and in the corresponding month of 1900 and 1901. Royal 8vo. Stitched. 2*a*. or 2*d*. (1*a*.)
Accounts of the External Land Trade of British India for the month of April 1902. Royal 8vo. Stitched. 8*a*. or 9*d*. (2*a*.)

Trade and Navigation Accounts of British India for the month of June 1902. No. 3. Royal 8vo. Stitched. 8a. or 9d. (2a.)

Area and yield of certain crops from 1891-1892 to 1901-1902. F'cap. Paper cover. 5a. or 6d. (8a.)

Accounts relating to the Trade carried by Rail and River in India in the quarter and in the twelve months ending March 1902, compared with the corresponding periods of the years 1900 and 1901. No. 4 of 1901-1902. F'cap. Paper cover. 8a. or 9d. (2a.)

MILITARY DEPARTMENT.

List of Light-houses and Light-vessels in British India, including those in the Gulf of Aden a existing at the end of 1901. 21st Issue. Royal 8vo. Board. Re. 1 or 1s. 6d. (2a.)

The Quarterly Indian Army List for July 1902. Royal 8vo. Paper cover. Rs 3 or 4s. 6d. (2a.)

Military Works Services Classified List and istribution Return. Corrected up to 30th June 1902. Royal 8vo. Paper cover. 4a. or 5d. (1a.)

General List of Vouchers required to support Credits and Charges in Supply and Transport Cash and Store Accounts. India. Royal 8vo. Paper cover. 10a. or 1s. (3a.)

PUBLIC WORKS DEPARTMENT.

Administration Report on the Railways in India for the calendar year 1901. F'cap. Paper cover. Rs 2 or 2s. 8d. (8a.)

Public Works Department Classified List and Distribution Return of Establishment. Corrected to 30th June 1902. Super Royal 8vo. Paper cover. Rs. 2 or 3s. (4a.)

Classified List of the Subordinate Establishment. Corrected to 30th June 1902. Super Royal 8vo. Paper cover. 4a. or 5d. (1a.)

REVENUE AND AGRICULTURE DEPARTMENT.

Technical Art Series for 1901. Together with their explanatory text and cover. Nos. I to XII. 4a. or 5d. (3a.) per plate.

List of Books published from January to June 1902.

LEGISLATIVE DEPARTMENT.

Chronological Tables of the Indian Statutes compiled, under the orders of the Government of India, by F. G. Wigley, Esq. Royal 8vo. Cloth. *Rs.* 4 or 6s. (7a.)

The Indian Penal Code (Act XLV of 1860), as modified up to the 1st July 1899, and with foot-notes brought down to 1st April 1901. *Rs.* 2-8 or 3s. 9d. (6a.)

The Indian Factories Act, 1881, as modified up to the 1st April 1891 (with foot-notes brought down to 1st July 1901). 5a. 6p. or 6d. (1a. 6p.)

Effect of Legislation for 1898, 1899, and 1900. *Re.* 1 or 1s. 6d. (2a.)

Chronological Tables of the Indian Statutes, 1901. *Re.* 1 or 1s. 6d. (2a.)

A Digest of Indian Law Cases, Vol. III. Cloth bound. *Rs.* 12 or 18s. (10a.)

Ditto ditto ditto. Quarter bound. *Rs.* 13 or 19s. 6d. (10a.)

Act IX of 1901. An Act further to amend the Indian Articles of War. 1a. or 1d. (1a.)

Act X of 1901. An Act further to amend the Court-fees Act, 1870. 1s. 3p or 1d. (1a.)

Act XI of 1901. An Act to facilitate the citation of certain Enactments and to amend and repeal certain obsolete Enactments.

Regulation III of 1901. A Regulation further to provide for the suppression of crime in certain frontier districts. 7a. 6p. or 9d. (1a. 6p.)

Regulation IV of 1901. A Regulation to make better provision for the suppression of murderous outrages in certain frontier tracts. 2a 6p. (1a.)

Regulation V of 1901. A Regulation further to amend the Upper Burma Land and Revenue Regulation, 1899. 1a. 9p. or 2d. (1a.)

Regulation VI of 1901. A Regulation to repeal so much as is unrepealed of the Punjab Frontier Regulation, 1872, and of the Hazara Settlement Rules, 1a. or 1d (1a.)

Regulation VII of 1901. A Regulation to alter certain of the laws in force in the North-West Frontier Province, to declare that certain Enactments are in force therein, and to bar the application of certain others hereto. 11a. or 1s. 3d. (2a.)

Corrigendum slip for Act XIII of 1900. 1a.

Title-page and Contents to Acts of 1901. 1a. 6p. (1a.)

Index to Acts of 1901. 2a. 9p. or 3d (1a.)

The European Vagrancy Act, 1874 (IX of 1874), as modified up to 1st December, 1901. 6a. 6p. or 7d. (1a.)

The Chaukidars Act, 1856 (XX of 1856), as modified up to 1st December, 1901. 7a. 6p. or 8d. (1a.)

The Registration of Ships Act, 1841 and 1850 (X of 1841 and XI of 1850), as modified up to 1st December 1893, and with foot-notes brought down to 1st December, 1901. 7a. or 7d. (1a.)

Table showing the effect of Legislation in the Governor-General's Council during 1901, 6a. or 6d. (1a.)

LIST OF TRANSLATIONS AND TRANSLITERATIONS OF ACTS PUBLISHED FROM 1ST OCTOBER 1901 TO 31ST MARCH 1902.

The Cattle-trespass Act, 1871 (I of 1871), as modified up to the 1st April 1901. In Urdu. 2a. (1a.)

Ditto. In Hindi. 2a. (1a.)

Act IX of 1901 (an Act further to amend the Indian Articles of War). In Urdu. 3p. (1a.)

Ditto. In Hindi. 3p. 1a.

Act X of 1901 (an Act further to amend the Court-fees Act, 1870). In Urdu. 3p. (1a.)

Ditto. In Hindi. 3p. (1a.)

HOME DEPARTMENT.

Chronological Tables for 1902, embodying Notifications by the Government of Bengal and Government of India prescribing holidays during the year with corresponding dates in English, Bengali, Velati, Fusli, etc. Royal 8vo. Paper cover. 4a. or 4d. (1a.)

Annual Report of the Sanitary Commissioner with the Government of India, 1900, with Appendices and Returns of Sickness and Mortality among European Troops, Native Troops, and Prisoners in India, for the year. F'cap. Boards. *Rs.* 3 or 4s. 6d. (8a.)

Report of Proceedings of the Central Indigenous Drugs Committee of India, Volume I. Royal 8vo. Board. Rs. 3-8 or 5s. 3d. (7a.)

List of Europeans and others in the English Factories in Bengal at the time of the Siege of Calcutta in the year 1756, with an appendix containing lists of European Sufferers. By S. Charles Hill, Esq., B.A., B SC. Super-Royal 4to. Paper cover. Rs 2 or 3s. (3a.)

Judicial and Administrative Statistics for British India. 6th issue, 1900 1901, and preceding years. F'cap. Board. Rs. 2 or 3s. (10a.)

The Countess of Dufferin's Fund Seventeenth Annual Report of the National Association for Supplying Female Medical Aid to the Women of India for the year 1901. Super-Royal 8vo. Re. 1 or 1s. 4d. (3a.)

DEPARTMENT OF REVENUE AND AGRICULTURE.

List of Officers in the Survey and other Scientific and Minor Departments subordinate to the Government of India in the Department of Revenue and Agriculture, corrected to 1st July 1901. Royal 8vo. Paper cover. 8a. or 9d. (2a.)

Report of the Committee on the Establishment of Co-operative Credit Societies in India. F'cap. Paper cover. 4a. or 5d. (2a.)

Forest Flora of the School Circle, North-Western Provinces, being a descriptive list of the indigenous woody plants of the Shaharanpur and Dehra Dun districts and the adjoining portions of the Tehri-Garhwal State in the North-Western Provinces, with Analyses. Double-Crown. 16mo. Full cloth. Re. 1-8 or 2s. (3a.)

Archæological Exploration in Chinese Turkestan. By Dr. M. A. Stein. Royal 4to. Cloth. Rs. 4 or 6s. (4a.)

Land Revenue Policy of the Indian Government. Royal 8vo. Cloth. 10a. or 1s. (4a.)

FOREIGN DEPARTMENT.

Report on the Administration of the Baluchistan Agency for 1900-1901. Re. 1-8 or 2s. 3d. (3a.)

Report on the Administration of the Hyderabad Assigned Districts for the year 1900-1901. F'cap. Limp cover. Rs. 3-12 or 5s. 6d. (6a.)

Report on the Political Administration of the territories within the Central India Agency for 1900-1901. F'cap. Limp cover. Re. 1-8 or 2s. (3a.)

Annotated Returns of the Dispensaries in Central India for 1900. F'cap. Limp cover. Re. 1-8 or 2s. (3a.)

Report on the Administration of the Civil and Military Station of Bangalore for the year 1900-1901. F'cap. Board. 8a. or 9d. (2a.)

Grammar and Vocabulary of Waziri Pashto. By J. G. Lorimer, Esq., I.C.S. Royal 8vo. Board. Rs. 3 or 4s. 6d. (5a.)

FINANCE AND COMMERCE DEPARTMENT.

List of Officers in the Finance and Commerce Department. Corrected to December 1901; to April 1902. 4a or 5d. (1a.) each.

Papers relating to the proposed Establishment of a Central Bank in India. F'cap. Board. Re. 1 or 1s. 6d. (4a.)

Administration Report of the Mint at Bombay and Calcutta for 1900-1901. F'cap. Paper cover. Re. 1 or 1s. 6d. (2a.)

Schedule IV of the Indian Tariff Act (VIII of 1878) of 1902. Royal 8vo. Stitched. 6a. or 6d. (1a.)

STATISTICAL DEPARTMENT.

Trade and Navigation Accounts of British India for the months of December 1901 to May 1902. Royal 8vo. Stitched. 8a. or 9d. (2a.) each.

Accounts of the External Land Trade of British India for the months of September 1901 to March 1902. Royal 8vo. Stitched. 8a. or 9d. (2a.) each.

Accounts relating to the Trade carried by Rail and River in India in the quarter ending September 1901. Compared with the corresponding periods of the years 1899 and 1900 No. 2 of 1901-1902. F'cap. Paper cover. 8a. or 9d. (2a.)

Ditto ditto ending December 1901. Compared with the corresponding periods of the years 1899 and 1900. No. 3 of 1901-1902. F'cap. Paper cover. 8a. or 9d. (2a.)

Accounts of the Trade of the French Possesions in India in the year ending 31st March 1901, and the four preceding years. F'cap. Paper cover. 2a or 3d. (1a.)

Statistics of Cotton Spinning and Weaving in the Indian Mills in January, February, and March 1902; in the ten months, April 1901 to January 1902; in the eleven months, April 1901 to February 1902, and in the twelve months, April 1901 to March 1902. Compared with the corresponding period of 1899-1900 and 1900-1901. Royal 8vo. Stitched. 2s. or 2d. (1a.) each.

Accounts of the Trade of Aden in the year ending 31st March 1901, and the four preceding years. F'cap. Paper cover. 10a. or 1s. (2a.)

Accounts of the Trade of the Portuguese Possessions in India in the year 1899-1900 and the four preceding years. F'cap. Paper cover. 2a. 3d. (1a.)

Prices and Wages in India. Nineteenth issue, 1902. Super-Royal 4to. Board. Re. 1-8 or 2s (9a.)

COMPTROLLER-GENERAL.

Finance and Revenue Accounts of the Government of India for 1900-1901. F'cap. Board. Rs. 2 or 3s. (8a.)

Appropriation Report on the Accounts of the Government of India for 1900-1901. By A. F. Cox, Esq. F'cap. Board. 8a. (5a).

MILITARY DEPARTMENT.

The Monthly Indian Army List for February to March, May, June 1902. Royal 8vo. Paper cover. Re 1-8 or 2s. 3d. (4a.) each.

Return of Wrecks and Casualties in Indian Waters for the year 1900. F'cap. Stiff cover. 12a. or 1s. (3a.)

Military Works Services Classified List and Distribution Return. Corrected up to 31st December 1901. Royal 8vo. Paper cover. 4a. or 5d. (1a.)

Indian Military Budget Estimate for the year 1902-1903. F'cap. Board. Re. 1-8 or 2s. 3d. (8a.)

PUBLIC WORKS DEPARTMENT.

Public Works Department Classified List and Distribution Return of Establishment. Corrected up to 31st December 1901. Super-Royal 8vo. Paper cover. Rs. 2 or 3s. (4a.)

Classified List (Public Works Department), Subordinate Establishment. Corrected up to 31st December 1901. Super-Royal 8vo. Paper cover. 4a. or 4d. (1a.)

Budget Estimate of the Indo-European Telegraph Department for the year 1902-1903. F'cap. Paper cover. 8a. or 9d. (1a. 6p.)

Budget Estimate of the Indian Telegraph Department for the year 1902-1903. F'cap. Paper cover. 8a. or 9d. (1a. 6p.)

History of Services of the Officers of the Engineer, Accounts, and State Railway Revenue Establishments. Corrected to 31st December 1901 In two Volumes. Royal 8vo. Board. Vol. I, Rs. 2-8 or 3s. 9d. (6a.). Vol. II Rs. 2-8 or 3s. 9d. (6a.) Complete, Rs. 5 or 7s. 6d. (9a.)

List of new books for sale at the Thomason College, Roorkee, which were not advertised before.

Roorkee Treatise on "Railways," 4th Edition, revised by F. Wolley Dod, F.C.H. Price, Rs. 3 per copy.

Roorkee Treatise on "Irrigation Works." By Lieutenant-Colonel J. Clibborn, I.S.C., B.A., L.C.E., C.I.E. Price Rs. 9 per copy.

Roorkee Treatise on "Sanitary Engineering." Compiled by Lieutenant-Colonel J. Clibborn, I.S.C., B.A., L.C.E., C.I.E. Price, Rs. 4-8 per copy.

Roorkee Manual of "Applied Mechanics," Volume II. The stability of structures mostly by graphic methods, by Lieutenant-Colonel J. H. C. Harrison, R.E. Price, Rs. 8-2 per copy.

Roorkee Manual of Hydraulics. Price per copy, Re. 1-4. (No. XIX, Elementary Treatise). By E. F. Tipple, Esq., B.A.

Designs for Wooden Bridges, together with rules for calculating the area of waterway, &c., and Plates. By late Rai Bahadur Kunhya Lal. Price per set, Rs. 4-2.

Pamphlet on Examination for Acid Radicals: Tables giving Analysis of Acids. Price per copy, 8a.

Pamphlet on Examination for Acid Bases: Tables giving Analysis of Metallic Bases. Price, 8a per copy.

Pamphlet on Note on Masonry Arches (College publication). Price, 4*a*. per copy.
Pamphlet on Small Direct Well Pumping Installations. Price, 4*a*. per copy.
Pamphlet on Experiments made on the passage of water through the sand of the Chenab River at the Khanki Weir. By Lieutenant-Colonel J Cibbern, I.S.C., C.A., L.C.E., C.I.E. Price per copy, 12*a*.
Indian Household Account Book for a period of two years, comprising Daily Table Expense Account, Bread, Butter and Milk Account, Dhobey's Account, Servants' Wages Account, etc. Price, Rs. 3 per copy.

Cash must accompany order. Articles are sent by V.-P. P. to persons in Government employment only.

Application is to be made to the Curator, Thomason College Book Depôt, Roorkee

Half-yearly list of new books and periodicals for sale at the Library of the Asiatic Society of Bengal, 57 Park Street, Calcutta.

ASIATIC SOCIETY'S PUBLICATIONS.

Proceedings Nos. 9 to 11 of 1901 and No. 1 of 1902, at 8*a*.
Journal, Part I, No. 2 of 1901, at Rs. 2.
" Part II, No. 2 of 1901, at Rs 2.
" Part III, No. 2 of 1901, and Part III, No. 1 of 1902, at Rs. 2.

BIBLIOTHECA INDICA.

Upamitibhavaprapancha Katha. Fasc. 4 at 6*a*.
Catapatha Brahmana. Vol. I, Fasc. 5, at 6*a*.
Varsakriya Kaumudi. Fasc. 3 and 4, at 6*a*.
Nityacarapaddhati. Fasc. 2 and 3, at 6*a*.
Apastamba Sranta Sutra. Vol. III, Fasc. 16, at 6*a*.
Mahabhasyaprodipodyata. Vol. II, Fasc. 2 and 3, at 6*a*
Al-Muquddasai. (English.) Vol. I, Fasc. 2, at 12*a*.

List of Books published by the Meteorological Department during the current quarter.

Monthly Weather Review of India for the month of February 1902. By John Eliot and Lala Hem Raj (illustrated by 5 plates). Quarto. Paper cover. Re. 1.
Indian Meteorological Memoirs, Volume XII, Part III. By John Eliot (illustrated by 68 plates) Quarto. Paper cover. Rs. 3.
Indian Meteorological Memoirs, Volume XII, Part IV. By W. L. Dallas, Quarto. Paper cover. Rs. 3
Monthly Weather Review of India for March 1902 By John Murray and Hem Raj. (Illustrated, by 5 plates.) Quarto. Paper cover. Re. 1.

List of books published by Meteorological Department from 1st January to 30th June, 1902.

Monthly Weather Review of India, from September, 1901, to January, 1902. By W. L. Dallas (illustrated by five plates). Quarto. Paper cover. Re. 1 per month.
Report of the Director, Government Observatory, Bombay, for the year ending 31st December, 1901. By N. A. F. Moos. Quarto Paper cover.
Report on the Kodaikanal and Madras Observatories for the period 1st April to 31st December, 1901. By C. Michie Smith. Quarto. Paper cover.
Indian Meteorological Memoirs, Volume XII, Part II. By John Eliot. Quarto. Paper cover. Rs. 3.
Indian Meteorological Memoirs, Volume XIII. By John Eliot. Quarto. Paper cover Rs 5.

List of new books published by the Geological Survey of India during the week ending 16th August, 1902.

Notes on the "Exotic Blocks" of Malla Johar in the Bhot Mahals of Kumaon. By A. Von Krafft, Ph. D., Assistant Superintendent, Geological Survey of India. Rs. 3.
Geology of Western Rajputana. By Tom D. La Touche, B.A. (Cantab), F.G.S. Rs. 2.

GOVERNMENT PUBLICATIONS FOR SALE

At the Bengal Secretariat Book Depôt, Writers' Buildings, Calcutta, and by the following Agents :—

AGENTS IN INDIA.

Messrs Thacker, Spink & Co., Calcutta and Simla.
Messrs. Newman & Co., Calcutta.
Messrs. Higginbotham & Co., Madras.
Messrs. Thacker & Co., Ld., Bombay.
Messrs. A. J. Combridge & Co., Bombay.
Mr. E. Seymour Hale, 53 Esplanade Road, Fort, Bombay, and Calcutta.
The Superintendent, American Baptist Mission Press, Rangoon.
Messrs. S. K. Lahiri & Co., Printers and Booksellers, College Street, Calcutta.
Rai Sahib M. Gulab Singh & Sons, Proprietors of the Mufid-i-am Press, Lahore, Punjab.
Messrs. V. Kalyanarama Iyer & Co., Booksellers, &c., Madras.
Messrs. D B Taraporevala Sons & Co., Booksellers, Bombay.

AGENTS IN ENGLAND.

Mr. E. A. Arnold, 37 Bedford Street, Strand, London.
Messrs. Constable & Co., 2 Whitehall Gardens, London.
Messrs. Sampson Low, Marston & Co., St. Dunstan's House, Fetter Lane, London.
Messrs. Luzac & Co., 46 Great Russell Street, London.
Messrs Kegan Paul, Trench, Trübner & Co., Charing Cross Road, London.
Mr. B. Alfred Quaritch, 15 Piccadilly, London.
Messrs. P S. King & Son, 2 & 4 Great Smith Street, Westminister, London.
Messrs. H S King & Co., 65 Cornhill, London.
Messrs Williams and Norgate, Oxford.
Messrs. Deighton Bell & Co., Cambridge.

AGENTS ON THE CONTINENT.

Messrs R. Friedländer & Sohn, Berlin, N. W. Carlstrasse, 11.
Mr. Otto Harrassowitz, Leipzig.
Mr. Karl Hiersemann, Leipzig.
Mr. Ernest Leroux, 28 Rue Bonaparte, Paris.
Mr. Martinus Nijhoff, The Hague.

NOTICE.—Books required for private use can be purchased Applications should be accompanied by a remittance in each case.

All remittances on account of subscriptions to, or prices of, Gazettes, Indian Law Reports or other Government publications available for sale at the Bengal Secretariat Book Depôt, or for cost of advertisements published in the Gazettes should, in future, be made payable to the "Treasurer, Bengal Secretariat, Calcutta." Advices of such remittances, if separately sent, should be addressed to the "Accountant, Bengal Secretariat." All advertisements intended for publication in the *Calcutta* or *Bengali Gazette* should be sent direct to the Superintendent, Government Printing, Bengal.

Books required for the Public Service should be obtained through the Heads of Departments.

☞ *The amounts within parentheses are for packing and postage.*

NEW PUBLICATIONS ISSUED DURING THE CURRENT QUARTER.

APPOINTMENT DEPARTMENT.

Quarterly Civil List of Bengal, corrected up to 1st July 1902. Super-Royal 8vo. Paper cover. Rs. 3. (4*a.*)

GENERAL DEPARTMENT.

Report of Emigration from the Port of Calcutta to British and Foreign Colonies, 1901. By the Protector of Emigrants, Calcutta. F'cap. Paper cover. 12*a.* (1*a.*)
Civil Engineering College, Sibpur, Calendar for 1902. Royal 8vo. Paper cover. 12*a.* (2*a.*)
Annual Report on Inland Emigration for the year 1901. F'cap. Paper cover. 8*a.* (1*a.*)
Annual Report on the Reformatory Schools at Alipore and Hazaribagh for the year 1901. F'cap. Paper cover. 4*a.* (1*a.*)

JUDICIAL DEPARTMENT

Annual Report on the Police Administration of the Town of Calcutta and its Suburbs for the year 1901. F'cap. Paper cover. Re. 1. (1*a.*)

LEGISLATIVE DEPARTMENT.

The Bengal Vaccination Act, 1880 (Bengal Act V of 1880), as modified up to 1st June 1902. Royal 8vo. Paper cover. Price 4*a.* (1*a.*)
The Salt Act, 1864 (Bengal Act VII of 1864), as modified up to 1st July 1902, with an appendix showing the extent to which the Indian Salt Act, 1882, is in force in Bengal. Royal 8vo. Paper cover. 3*a.* (1*a.*)

MUNICIPAL DEPARTMENT.

Triennial Report on the working of the Charitable Dispensaries under the Government of Bengal and the Calcutta Medical Institutions for the years 1899, 1900 and 1901. F'cap. Paper cover. Rs. 5. 3*a.*)
Thirty-fourth Annual Report of the Sanitary Commissioner for Bengal for the year 1901. F'cap. Board. Paper cover. Re. 1-12, (3*a.*)
Fifth Triennial Report of Vaccination in Bengal during the years 1899-1900, 1900 1901, and 1901-1902 F'cap. Paper cover. Re. 1. (1*a.*)

POLITICAL DEPARTMENT.

Administration Report on the Jails of Bengal for the year 1901. F'cap. Board. Paper cover. Rs. 3. (3*a.*)

PUBLIC WORKS DEPARTMENT.

Electric Traction.—Six lectures delivered in March 1902 at the Civil Engineering College, Sibpur, by J. W. Meares, Esq., Electrical Engineer to the Government of Bengal. Royal, 8vo. Full cloth. Re. 1-8. (2*a.*)

Classified List and Distribution Return of Establishment of the Public Works Department, Bengal, corrected up to 30th June 1902. Super-Royal 8vo. Paper cover. 4*a* (1*a.*)

A Manual for the guidance of the staff of the Revenue Division of the Sone Canals. By H TOOGOOD, Esq., Superintending Engineer, Sone Circle. Royal 8vo. Board Paper cover. Re. 1. (2*a.*)

REVENUE DEPARTMENT.

Season and Crop Report of Bengal for the year 1901-1902. F'cap. Paper cover. 8*a.* (1*a.*)

The Sale Law Manual, a Manual of the Revenue and the Patni Sale Laws with Notes and the rules, &c., under them. Royal 8vo. Board. Paper cover. Re. 1-4. (3*a.*)

Price-list of staple food-crops in the local areas of Bengal, for the period from 1st January to 31st March 1901. F'cap. Board. Paper cover. Re. 1. (2*a.*)

Rules for the keeping and inspection of accounts of collections in Government and Wards' Estates. Published under the authority of the Board of Revenue, L. P. Royal 8vo. Board. Paper cover. As. 8. (1*a*)

The Government Estates' Manual, 1902. Royal 8vo. Board. Paper cover, Re. 1. (3*a.*)

PUBLICATIONS ISSUED BETWEEN THE 1ST JANUARY AND THE 30TH JUNE 1902.

APPOINTMENT DEPARTMENT.

Quarterly Civil List of Bengal corrected up to 1st April 1902. Super-royal 8vo. Paper cover. Price Rs. 3. (4*a.*)

FINANCIAL DEPARTMENT.

The Stamp Manual, 1902. A Manual for the guidance of officers in the administration of the Stamp Department. Royal 8vo. Board. Paper cover. Price Re. 1-8. (6*a.*)

Annual Report on the consumption of Stationery in Bengal during 1900-1901. F'cap. Paper cover. Rs. 3. (2*a.*)

GENERAL DEPARTMENT.

List of Officers in the Subordinate Educational Service, Bengal, corrected up to 1st April 1902. F'cap. Paper cover. 8*a.* (1*a.*)

JUDICIAL DEPARTMENT.

Question Papers set at the Pleadership and Muktearship Examinations for the year 1902. Royal 8vo. Paper cover. Price 2*a.* (1*a*)

Question Papers set at the Examination of candidates for appointment as Sub-Inspectors of Police. July and November 1901. Royal 8vo. Paper cover. Price 5*a.* (1*a.*)

Question Papers set at the Examination of candidates for recruiting the staff of Superior Police Officers in Bengal and Assam, held in November 1901. Royal 8vo. Paper cover. Price 8*a.* (1*a.*)

LEGISLATIVE DEPARTMENT.

The Court of Wards' Act, 1879 (Bengal Act IX of 1879), in Hindi, as modified up to the 1st July 1901. Royal 8vo. Paper cover. Price 6*a* (1*a.*)

The Calcutta Port Act, 1890 (Bengal Act III of 1890), as modified up to 1st April 1902. Royal 8vo. Paper cover. Price 10*a.* (1*a.*)

MUNICIPAL DEPARTMENT.

Annual Returns of the Lunatic Asylums in Bengal with brief notes for the year 1901. Compiled by the Inspector-General of Civil Hospitals. F'cap. Paper cover. Price Re. 1. (2*a.*)

Account Rules under the Local Self-Government Act, Part VIII. F'cap. Paper cover. Price 8*a.* (.)

Annual Report of the Chemical Examiner's Department, Bengal, 1901. F'cap. Paper cover Price 8*a.* (2*a.*)

PUBLIC WORKS DEPARTMENT.

Distribution Return of Officers and Subordinates employed on Local Works in Bengal, corrected up to 31st December 1901. Super-royal 8vo. Paper cover. Price 2*a.* (1*a.*)

Embankment and Drainage Report of the Government of Bengal, Irrigation Department, for the year 1900-1901. F'cap. Boards Paper cover. Price Rs. 2 (3*a*)

Classified List and Distribution Return of Establishment corrected up to 31st March 1902. Super-royal 8vo. Paper cover. Price 4*a.* (1*a.*)

Dacca Electric Lighting License, 1902. F'cap. Paper cover. Price 14*a.* (1*a*)

Notes on the construction of Railways in India (for students) with 5 charts. F'cap Paper cover. Price Re. 1. (1*a.*)

REVENUE DEPARTMENT.

Annual Report of the Burdwan Experimental Farm for the year 1900-1901. F'cap. Paper cover. Price 3*a.* (1*a*)

Annual Report on the Survey Operations in Bengal during the year 1900-1901 (from 1st October 1900 to 30th September 1901) F'cap. Paper cover. Price Re. 1-8. (2*a.*)

Annual Report of the Director of the Department of Land Records, Bengal, on Settlements, for the year ending 30th September 1901. F'cap. Paper cover. Price 8*a.* (1*a.*)

The Practice and Procedure Manual, published under the authority of the Board of Revenue. Royal 8vo. Board. Paper cover. Price 12*a.* (3*a*).

OLDER PUBLICATIONS.

A General Catalogue of all Government Publications (corrected up to 31st December, 1901) may be obtained *gratis* on application to the Officer in charge, Bengal Secretariat Book Depôt.

Publications for sale at the office of the Chief Inspector of Explosives with the Government of India.

Rules for the manufacture, possession and sale of explosives issued by each of the Local Governments and Administrations. Price 12*a*.

Rules for the transport and importation of explosives issued by the Government of India. Price 12*a*.

Rules for the transport and importation of explosives at the Port of Calcutta. Price 4*a*.

The Indian Law Reports.

Published under Authority.

THE Indian Law Reports, published under the authority of the Governor-General in Council, appear in monthly parts, published as soon as possible after the first of each month at Calcutta, Madras, Bombay, and Allahabad, and comprise four series—one for the Calcutta High Court, a second for the Madras High Court, a third for the Bombay High Court, and a fourth for the Allahabad High Court. The cases heard by the Privy Council on appeal from each High Court are reported in the series for that High Court. Cases heard by the Privy Council on appeal from Provinces in India not subject to any High Court are reported in the Calcutta Series.

The Calcutta Series is distributed by the Bengal Secretariat Book Depôt, and the Madras, Bombay, and Allahabad Series are distributed direct from Madras, Bombay, and Allahabad respectively.

In supersession of the previous advertisements, on and from the 1st January 1889 the terms of subscription and sale will be as follows for current issues as well as for back numbers of the reports from 1876:—

Terms of subscription, payable annually in advance.

For the complete series, *including postage* (Inland rate) Rs. 22-8.

Ditto, ditto (Overland rate) Rs. 28.

	Without postage.	With postage.
	Rs. A. P.	Rs. A. P.
For the Calcutta Series	10 0 0	12 8 0
„ each of the Madras, Bombay, and Allahabad Series	6 9 0	7 0 0
„ a part of the Calcutta Series purchased separately (*inclusive of postage in India*)	.....	2 0 0
„ a part of each of the Madras, Bombay, and Allahabad Series purchased separately (*inclusive of postage in India*)	.....	1 0 0

The following are the rates at which deductions will be made for parts out of print and at which duplicate copies will be supplied to subscribers when required in place of copies lost in transit, provided complaint of non-receipt is made to the Publisher within three months of the date of publication:—

	For town.	For mufassal.
	Rs. A. P.	Rs. A. P.
For the Calcutta Series, per copy ...	0 8 9	0 10 3
„ each of the Madras, Bombay, and Allahabad Series, per copy ...	0 5 3	0 5 9
„ the Calcutta Series, for the year	7 2 6	8 6 3
„ each of the Madras, Bombay and Allahabad Series, for the year	4 4 6	4 11 3

Persons desiring to subscribe for or purchase the Report should apply to—

The Superintendent, Government Press, Madras.

„ Superintendent, Government Central Press, Bombay.

„ Curator of Government Books, United Provinces of Agra and Oudh, Allahabad.

„ Officer in charge, Bengal Secretariat Book Depôt, Calcutta.

Orders and subscriptions for 1903 should be at once registered and remitted by money-order payable to the Treasurer, Bengal Secretariat, Calcutta.

ADVERTISEMENTS will be received for publication on the wrappers of the Indian Law Reports, Calcutta Series, at the following rates, payable in advance—

	One page.	Half page.	Quarter page.
	Rs.	Rs.	Rs.
For one issue ...	20	14	9
„ three issues ...	55	36	24
„ six „ ...	100	68	45
„ nine „ ...	145	96	64
„ twelve „ ...	180	120	80

SEVERAL volumes of the BENGAL LAW REPORTS, from August 1868 to December 1875, and FULL BENCH RULINGS, Parts I and II, are available at the following rates:—

	Without postage.	With postage.
	Rs. A. P.	Rs. A. P.
Bengal Law Reports, for one year ...	20 0 0	22 8 0
Single copies, Rs. 2 per copy.		
Full Bench Rulings, Parts I and II ...	20 0 0	22 8 0

Obtainable at the Bengal Secretariat Book Depôt, Writers' Buildings, Calcutta.

Remittances to be forwarded to the Treasurer, Bengal Secretariat, Writers' Buildings, Calcutta.

The complete series of the INDIAN LAW REPORTS for the years 1876 to 1885, and 1890 to 1892, 1894, 1896 to 1901 having now been reprinted, are available, and may be purchased for all the years, or any particular year, on application to the Officer in charge, Bengal Secretariat Book Depôt.

The wanting parts of the Reports for the remaining years are being reprinted, and complete Reports from the beginning to date will be available shortly.

NOTICE TO SUBSCRIBERS.

SUBSCRIBERS are hereby informed that, unless complaint of non-receipt of any number is made to the Publisher of the series within three months of the date of publication, the benefits of the subscription rates for copies lost in transit will not be allowed, and full rates will be charged. The price per copy of each of the four series at subscription rates and at full rates is shown below:—

	Per copy. Subscription rate. Town.	Mofussal.
	Rs. A. P.	Rs. A. P.
Calcutta Series	0 8 9	0 10 3
Each of the Madras, Bombay, and Allahabad Series ...	0 5 3	0 5 9

	Full rate. Town.	Mofussal.
	Rs. A. P.	Rs. A. P.
Calcutta Series	2 0 0	2 0 0
Each of the Madras, Bombay, and Allahabad Series ...	1 0 0	1 0 0

Notice.

THE *CALCUTTA GAZETTE*.

The 1st March 1901.—From this date the subscription to, and postage for, the *Calcutta Gazette* will be at the following rates, payable in advance:—

PER ANNUM.	For Calcutta.	For the Mufassal, including postage.
	Rs. A.	Rs. A.
Entire *Gazette*	15 0	20 0
Parts I, Ia and Ib together ...	5 0	7 8
Part II	1 0	2 12
Parts III, IV and IVa together	4 0	6 0
„ V and VI together ..	2 0	3 0
Appendix (Marine Notifications)	1 0	2 12
Supplement	5 0	7 8
PER ISSUE.		
Entire *Gazette*	0 8	0 10
Supplement	0 4	0 5

N.B.—Separate Parts of each issue of the *Gazette*, and occasionally important Rules and Extracts, can be obtained from the Officer in charge, Bengal Secretariat Book Depôt, at the rate of one anna for every sixteen pages or a fraction thereof. Postage according to weight.

RATES FOR ADVERTISEMENTS in the *Calcutta Gazette* —

Full Page, per issue ... ... Rs. 20

Half „ „ „ ... ... „ 10

Casual advertisements, 4 annas per line.

Annual Statement of the Sea-borne Trade and Navigation of the Bengal Presidency and of its Chief Port (Calcutta), and each of its Subordinate Ports—Chittagong, Balasore, Cuttack, Pooree, and Narsingunge, Volumes I and II. Price Rs. 20 for 1899-1900. Published at the Calcutta Custom House. Previous years' volumes can also be obtained at the same price.

Parts I, II, and III of a Descriptive Catalogue of the Sanskrit Manuscripts in the Library of the Calcutta Sanskrit College, prepared by Pandit Hrishikesa Sastri and Babu Siva Chandra Gui, M.A., B.L., of that College are offered to the public for sale. The Catalogue is to be completed in 23 parts, the price of each part being 12 annas a copy, exclusive of postage. Copies can be obtained, from the Principal of the Sanskrit College, Calcutta.

The Calcutta Gazette.

WEDNESDAY, SEPTEMBER 3, 1902.

PART IVA.

Proceedings of the Bengal Legislative Council.

GOVERNMENT OF BENGAL.

LEGISLATIVE DEPARTMENT.

Abstract of the Proceedings of the Council of the Lieutenant-Governor of Bengal, assembled under the provisions of the Indian Councils Acts, 1861 and 1892.

The Council met in the Council Chamber on Monday, the 25th August, 1902.

Present:

The Hon'ble Sir John Woodburn, K.C.S.I., Lieutenant-Governor of Bengal, *presiding.*

The Hon'ble Mr. J. A. Bourdillon, C.S.I.

The Hon'ble Mr. C. E. Buckland, C.I.E.

The Hon'ble Mr. B. L. Gupta.

The Hon'ble Mr. W. C. Macpherson.

The Hon'ble Mr. E. W. Collin.

The Hon'ble Mr. D. B. Horn.

The Hon'ble Mr. R. T. Greer.

The Hon'ble Mr. T. K. Ghose.

The Hon'ble Maulvi Syed Mahomed.

The Hon'ble Mr. A. M. Bose.

The Hon'ble Dr. Asutosh Mukhopadhyaya, M.A., D.L., F.R.A.S., F.R.S.E.

The Hon'ble Babu Chaturbhooj Sahay.

The Hon'ble Babu Joy Gobind Law, C.I.E.

The Hon'ble Maharaja Manindra Chandra Nandy, of Cossimbazar.

The Hon'ble Mr. A. A. Apcar.

The Hon'ble Maulvi Seraj-ul-Islam, Khan Bahadur.

QUESTIONS AND ANSWERS.

OVERHEAD ELECTRIC WIRES IN CALCUTTA.

The Hon'ble Maharaja MANINDRA CHANDRA NANDY, of Cossimbazar, in the absence of the Hon'ble ASIF KADR SAIYID WASIF ALI MIRZA, of Murshidabad, asked:—

Has the attention of Government been drawn to the danger consequent upon the breaking of overhead electric wires in Calcutta and to the many accidents reported in the newspapers to have occurred therefrom? If so, will the Government be pleased to state what action, if any, it has taken or proposes to take to prevent or even to minimize the occurrence of such accidents in the future.

The Hon'ble MR. HORN replied:—

"The attention of Government has been called to the breakages of overhead wires which have occurred during the past hot weather. Altogether seven wires were broken on four different occasions. Of these, six were during storms, and the breakages were caused by branches of trees falling on the wires. One man was killed in Dhurrumtollah and one horse at Ballygunge, and two men were injured in Bentinck Street. The Chairman of the Corporation and the Electric Supply Corporation are removing, in concert, branches of trees which threaten the wires. A successful experiment has been made with a device for automatically rendering the wires harmless in the event of a break, and the Chairman of the Corporation has been asked to arrange with the Electric Supply Corporation that this device shall be applied in all important thoroughfares."

PRIMARY SCHOOLS.

The Hon'ble Maharaja MANINDRA CHANDRA NANDY, of Cossimbazar, in the absence of the Hon'ble ASIF KADR SAIYID WASIF ALI MIRZA, of Murshidabad, asked:—

Will the Government be pleased to order an inquiry with a view to discover the exact causes which have led to the decrease in the number of primary schools in Bengal by 2,000 during the last year, and to the corresponding decrease of 40,000 in the number of pupils.

The Hon'ble MR. MACPHERSON replied:—

"This matter was noticed in the Lieutenant-Governor's Resolution, dated 9th December, 1901, on the Report on Public Instruction for the year ending 31st March, 1901, and an inquiry was ordered The result of the inquiries is to show that there was in the districts of the Burdwan and Dacca Divisions a real falling off in the number of primary schools and pupils in 1900-1901, due in Burdwan to calamities of season, and in Dacca to an absorption of pupils in secondary schools. There has also been some want of method in the compilation of returns of unaided schools, and the Director has issued necessary instructions to the District Boards who are responsible for collection of these returns."

THE BENGAL DRAINAGE (AMENDMENT) BILL, 1902.

The Hon'ble MR. MACPHERSON presented the revised Report of the Select Committee on the Bill to amend the Bengal Drainage Act, 1880. He said:—

"I also move that the Report, which has been in the hands of Hon'ble Members for some days, be taken into consideration, and that the clauses of the Bill be considered in the form recommended by the Select Committee. I shall add only a few words to the Report of the Committee..

"The principal changes in the Bill made since it was introduced in Council are—*first*, the changes which give relief to landlords and tenants by reason of the decision of cost mentioned by me at the last Council Meeting, whereby the rate of interest on drainage charges is reduced; *secondly*, the suspensory

clauses 51D to 51J should be mentioned. I may say, I think, on behalf of the Committee, that while we are unanimous and confident in the opinion that the main principle of this Bill already accepted by this Council is right, and that it is equitable in this case of certain and fixed dues paid by landlords that they should have the help of the certificate procedure in recovering those same certain and fixed dues from the tenants who reap the whole benefit of the drainage works, it is yet with no light heart that we have shaped and re-shaped the clauses of the Bill which are to carry this policy into effect. The details which require consideration in the actual working arrangements for apportionment, adjustment, recovery, suspension, and refund are numerous and complex; and we may have overlooked difficulties which should have been cleared away. It is for this reason that we have proposed in clause 19 of the Bill to take power for the Lieutenant-Governor to make rules as to refunds and other matters.

"The Committee in five formal meetings gave some sixteen hours of deliberation to the details of the Bill; and this was in addition to much separate study of the subject-matter. We are indebted to the Secretary to the Council for much assistance rendered by him.

"I invite special attention to the suspensory clauses of the Bill, because such provisions of law are altogether new to Bengal, though well known in the Upper Provinces of India, where loss of crops, through calamity of season, is more common. It will not, I think, be out of place for me to mention shortly the genesis of those clauses in the present Bill. The Drainage Act of 1880 provides that every person holding improved or reclaimed land in the drainage areas shall be liable to pay drainage dues. Some representations were made to the effect that it is not equitable that tenants not having an occupancy status should be compelled to pay drainage dues. Those representations, when examined, resolved themselves into an argument that it is hard to make a non-occupancy tenant pay a drainage due in a year in which perhaps, in spite of the drainage works, an unusual flood may have come and ruined or seriously damaged his crop, while next year his landlord may eject him. You, Sir, then suggested that the best remedy for such cases was to provide for suspension of demand when there is calamity of season—suspension both in favour of the landlords and in favour of the tenants; and clauses 51D to 51J were drafted to give effect to this suggestion. I desire to state that, personally, I fully accept the policy of suspension as equitable and adequate to meet the requirements. I move that the Report and the clauses of the Bill as recommended by the Select Committee be now considered."

The Motion was put and agreed to.

The Hon'ble Mr. MACPHERSON also moved that the Bill, as amended, be passed.

The Hon'ble BABU JOY GOBIND LAW said:—"It will be apparent to Hon'ble Members that the amendments recommended in the Report are all calculated to afford sensible relief to all persons connected with land—the landlord as well as the tenant. In the first place, the certificate procedure will be open to both for the recovery of drainage charges imposed on them, and they will thus be placed in a better position than before for meeting and recovering those charges. In the second place, the interest charge will be reduced from 5 to 4 *per cent.*, and there will be no compound interest to pay. Moreover, there is every possibility that the Government will see its way to make a material reduction in the charge for establishment for carrying out drainage works. It has been a complaint with those who had to bear the charge that it was not based on actuals, but that its incidence was regulated by some ancient formula or office rules. I am unable to say how far this is correct; but there is no doubt that the charge forms a very important item in the aggregate cost of a drainage scheme. It is therefore a matter of congratulation that it is the intention of the Government to revise it.

"The Bill goes further. Hon'ble Members will observe that, in Part II of the Bill, it is proposed to extend these benefits to works already carried out, namely, the Howrah and Rajapur schemes, and to revise the cost of these works,

so as to place them on a level with future schemes. All this will afford substantial relief to all parties concerned, and will no doubt be welcomed by them with gratitude.

"In the matter of establishment charges, I will venture to make a suggestion for the consideration of Government. Since the carrying out of the Rajapur works it has become evident that they are susceptible of improvement, and it appears to me that, instead of refunding the savings, it would be a far better plan to apply them to effecting the necessary improvements."

The Hon'ble BABU CHATURBHOOJ SAHAY said:—"With Your Honour's permission I beg to say a few words before the Bill is passed. On reading the first Report of the Select Committee on the Drainage Act Amendment Bill, I considered it desirable to propose some amendments. The most important of these, I am glad to find, have been kindly accepted by the Select Committee and embodied in clauses 9 and 12, sections 44A (*2*), (*3*), 51B (*1*) and (*2*), and 51C (*1*) and (*3*), of the amended Bill. The noticeable features of the amendments as adopted by the Select Committee are (1) the continuance of the right of the landholder, removed from the list under section 36A, to recover previous payments made by him; (2) the recognition of the liability of transferences after the apportionment of costs for the drainage dues, and (3) the enjoyment by the person against whom certificate may be issued of the rights of judgment-debtors under the Public Demands Recovery Act.

"The other suggestions made by me and accepted by the Select Committee are not of sufficient importance to justify me in detaining the Council with any detailed notice I am greatly obliged to the Hon'ble Mover of the Bill and the other Hon'ble Members of the Select Committee for a careful and favourable consideration of my amendments.

"The Bill, which will soon pass to the stage of law, will be welcome to both the landlords and the tenants. It protects the interests of both. It gives new rights to the former, the benefit of the certificate procedure of the Public Demands Recovery Act; while to the latter it brings a very substantial relief of the charge of compound interest being taken off and the burden of simple interest appreciably reduced. The reduction in the rate of interest, which so heavily pressed upon the poor tenants, is sure to be recognised as an inestimable boon, and the Province will be grateful to Your Honour's Government for obtaining it, and to the Government of India for conferring the same."

The Hon'ble MR. MACPHERSON said:—"I have nothing to add to the debate, but to acknowledge, as I should have acknowledged before, the assistance given to the Select Committee by the Hon'ble Babu Chaturbhooj Sahay and by Babu Mahananda Gupta, Deputy Collector."

The Hon'ble the PRESIDENT said:—"I have listened with satisfaction to the remarks which have been made upon this Bill by my hon'ble friends, Babu Joy Gobind Law and Babu Chaturbhooj Sahay. I think with them that the Bill is a just and necessary Bill, and the Act upon which it depends was passed with the most benevolent intentions by Sir Ashley Eden, but it has been accepted and carried out as a practical scheme in only three instances in Bengal. After the floods of 1900, I visited Amta, which had been very seriously damaged by these floods, and it was my suggestion to the residents of Amta that they should have the Drainage Act applied to this area as it was to the adjoining areas of Howrah and Rajapur. The suggestion was opposed, and the basis of the opposition was that the landlords had their drainage dues under the Act irresistibly realized from them by Government contributions, while the Act gave them no power of recovering contribution that were due from the tenants.

"The Act recognises two forms of improvement by drainage. One is the betterment of lands which are already cultivated, and the other is the reclamation of lands which were never cultivated at all before. In the principal scheme under the Act of 1880, that of Rajapur, no less than seven-eighths of the area were benefited, as compared with reclaimed land, and therefore the whole effect of the Act was really to be ascertained in the

portion of the area affected by the drainage, which was already under cultivation and on which rent was already paid. The tenants of that area had to pay their share due upon the holdings, according to the assessment of the Drainage Commissioners, to the landowner, either by a fixed instalment extending over a number of years, or by a deliberate addition to the amount of their rent. The vast majority of tenants elected the system of paying the amount due upon their holdings by a fixed number of instalments. It therefore was of the greatest moment to the landowners that the fixed instalment should be realized from the tenants in the same way as the fixed instalments were realized from the landlord by the Government. If this was not done, the landowners had a legitimate grievance. That legitimate grievance has now been removed, and the opportunity has been taken by Government to make some substantial concessions in all future schemes; the interest charges are reduced by the Supreme Government, and the Local Government on its part is ready to exempt all such undertakings from any charges for Public Works establishment, except those that are due to an actual increased establishment. These concessions will cover, as my hon'ble friend has said, not merely all future undertakings of the kind, but they will have retrospective effect on all undertakings upon which recoveries are now being made.

"The result has been the necessity of a large number of verbal changes in the old Act, but I trust and believe the general effect of the measure, which we are now about to pass into law, will be to give a system which is fairer and more acceptable to all parties concerned."

The Motion was then put and agreed to.

THE BENGAL TENANCY (VALIDATION AND AMENDMENT) BILL, 1902.

The Hon'ble MR. MACPHERSON moved that the Bengal Tenancy (Validation and Amendment) Bill, 1902, be referred to a Select Committee, consisting of the Hon'ble Mr. Bourdillon, the Hon'ble Mr. B. L. Gupta, the Hon'ble Mr. T. K. Ghose, the Hon'ble Mr. A. M. Bose, the Hon'ble Asif Kadr Saiyid Wasif Ali Mirza, of Murshidabad, the Hon'ble Babu Joy Gobind Law, the Hon'ble Maulvi Seraj-ul-Islam, Khan Bahadur, and the Mover, with instructions to report at the first meeting of the next Session of the Council.

The Motion was put and agreed to.

The Council was adjourned *sine die*.

CALCUTTA;
The 2nd September, 1902.

F. G. WIGLEY,
Secretary to the Bengal Council, and Assistant Secretary to the Govt. of Bengal, Legislative Department.

APPENDIX TO

The Calcutta Gazette.

WEDNESDAY, SEPTEMBER 3, 1902.

NOTICES TO MARINERS.

GOVERNMENT OF BENGAL—MARINE DEPARTMENT.

NOTICE TO MARINERS—No. 256.

[First Publication.]

BAY OF BENGAL—BURMA COAST.

Rangoon river—The F. L. V. "Martaban" relieves temporarily the present floating light vessel at the Krishna shoal.

THE Principal Port Officer, Burma, has given notice dated the 21st August that the F. L. V. *Martaban* will relieve temporarily the present floating light vessel at the Krishna shoal on the 30th September 1902.

The light to be exhibited on that date will be a white flash of 5 seconds duration every 45 seconds.

This Notice affects the following Admiralty Charts:—Bassein river to Pulo Penang, No. 830, Koronge island to White Point, No. 823: Also, List of Lights, VI, 1901, No. 354, and Bay of Bengal Pilot, 1901, page 345.

E. J. BEAUMONT, COMDR., R I M.,
Port Officer of Calcutta.

Published for general information.

C. B. BAYLEY,
Asst. Secy., Marine Department.

CALCUTTA, *the 30th August 1902.*

GOVERNMENT OF BENGAL—MARINE DEPARTMENT.

NOTICE TO MARINERS—No. 257.

[First Publication.]

BAY OF BENGAL—BURMA COAST.

Moulmein river approaches—Rock reported.

THE Bombay Government has given notice (No. 105 of 1902) that the Commander of R. I. M. S. *Dalhousie* reports the existence of a rock with 19 feet least water on it and deep water round it south of Green Island.

The rock lies S. 18° W., 1·65 miles from Amherst Pagoda.

This Notice affects the following Admiralty Charts:—Moulmein river and approaches, No. 1845, and Koronge Island to White Point, including the Gulf of Martaban, No. 823 Also, Bay of Bengal Pilot, 3rd Edition, 1901, page 374.

E. J. BEAUMONT, COMDR, R.I M.,
Port Officer of Calcutta.

Published for general information.

C. B. BAYLEY,
Asst. Secy., Marine Department.

CALCUTTA, *the 30th August 1902.*

GOVERNMENT OF BENGAL—MARINE DEPARTMENT.

NOTICE TO MARINERS—No. 252.

[Second Publication.]

AFRICA, EAST COAST—PEMBA ISLAND.

Ras Kegomacha—Light intended.

THE British Admiralty has given notice (No. 471 of 1902) that the Port Office, Zanzibar, reports that a *flashing* light, showing a *red flash* and a *white flash* alternately *every ten seconds*, elevated 125 feet above high water, will shortly be established on Ras Kegomacha, Pemba island.

The light is dioptric and will be shown from an iron framework structure painted white.

Approximate position, lat. 4° 52′ S., long. 39° 40¾′ E.

Further Notice will be given when this light has been established.

This Notice affects the following Admiralty Charts :—Delagoa bay to cape Guardafui, No. 597; Zanzibar to Malindi, No. 664; Chale point to Pangani, No. 1390; West coast of Pemba island, No. 1812: Also, List of Lights, part VI, 1902, No. 119; Africa Pilot, part III, 1897, page 465; and Supplement, 1900, page 37.

E. J. BEAUMONT, COMDR., R.I.M.,
Port Officer of Calcutta.

Published for general information.

C. B. BAYLEY,
CALCUTTA, *the 22nd August 1902.* *Asst. Secy., Marine Department.*

GOVERNMENT OF BENGAL—MARINE DEPARTMENT.

NOTICE TO MARINERS—No. 253.

[Second Publication.]

BAY OF BENGAL—ORISSA COAST.

Dhamrah river—E. Buoy shifted.

THE Port Officer, Cuttack and Balasore ports, has given notice that the E buoy has been moved 270 feet S. E. ½ S. magnetic, of its former position, and now bears N. W. ½ W. magnetic, distant 6,200 feet from the column of the old light-house.

E. J. BEAUMONT, COMDR., R.I.M.,
Port Officer of Calcutta.

Published for general information.

C. B. BAYLEY,
CALCUTTA, *the 23rd August 1902.* *Asst. Secy., Marine Department.*

GOVERNMENT OF BENGAL—MARINE DEPARTMENT.

NOTICE TO MARINERS—No. 254.

[Second Publication.]

KOREA, WEST COAST.

Sir James Hall group—Shoals in the vicinity.

THE British Admiralty has given notice (No. 489 of 1902) of the existence of the undermentioned shoals in the vicinity of the Sir James Hall group :—

a. A sandy shoal, with a depth of 4½ fathoms over it, situated with the north-western extremity of Peng yong Do bearing S. 71° W., distant 3½ miles, and the 455 foot hill on the same island, S. 27° E.

Approximate position, lat. 38° 0′ N., long. 124° 41½′ E.

There is another sandy shoal, with a depth of 4¾ fathoms over it, situated at a distance of 6 cables S. 61° E. from the above.

b. A shoal, composed of sand and shells, with a depth of 3¾ fathoms over it, situated with western extremity of Kulin Do bearing N. 22° W., distant 14 cables, and northern extremity of To chong Do, S. 79° W.

Approximate position, lat. 37° 54′ N., long. 124° 58′ E.

c. A shoal patch, with a depth of 2¼ fathoms over it, situated with the southern extremity of Erha Do bearing N. 81° E., distant 2¾ miles, and southern extremity of Changlin Do, N. 24° W.

Approximate position, lat. 37° 44′ N., long. 125° 10½′ E.

Certain other shoals in the vicinity of Suni Do and Rooper harbour have been found, for which reference should be made to the new edition of Chart No. 1258, which will be issued.

(*Variation 4° Westerly in 1902.*)

This Notice affects the following Admiralty Charts:—Approaches to Ping yang inlet No. 1257; approaches to Seoul, No. 1258: Also, China Sea Directory, vol. IV, pages 45, 46, 47, 48; and Supplement, 1898, page 3.

E. J. BEAUMONT, COMDR., R.I.M.,
Port Officer of Calcutta.

Published for general information.

C. B. BAYLEY,
CALCUTTA, *the 25th August 1902.* *Asst. Secy., Marine Department.*

GOVERNMENT OF BENGAL—MARINE DEPARTMENT.

NOTICE TO MARINERS—No. 255.

[Second Publication.]

BAY OF BENGAL—CHITTAGONG COAST.

Karnafulli river—Depth of water found in the river channels.

	Ft.	In.
Track No. I—Outer bar	12	9
Track No. II—Inner bar—		
Disc on diamond	10	3
Batten beacon on pillar	10	6
Track No III—		
Triangle on cross and ball	23	0
Track No. IV—Guptakhally crossing—		
Tripod on diamond	15	0

E. J. BEAUMONT, COMDR., R.I.M.,
Port Officer of Calcutta.

Published for general information.

C. B. BAYLEY,
CALCUTTA, *the 25th August 1902.* *Asst. Secy., Marine Department.*

GOVERNMENT OF BENGAL—MARINE DEPARTMENT.

NOTICE TO MARINERS—No. 244.

[Third Publication.]

INDIA, EAST—COROMANDEL, SOUTH COAST.

Point Calimere—Date of alteration extended.

WITH reference to Notice to Mariners No. 40, dated the 22nd February last, issued by this office, the Presidency Port Officer, Madras, has given further notice (No. 43 of 1902) that the date for the alteration of the light at Point Calimere noted therein has been altered from 1st September to 1st December 1902.

E. J. BEAUMONT, COMDR., R.I.M.,
Port Officer of Calcutta.

Published for general information.

C. B. BAYLEY,
CALCUTTA, *the 13th August 1902.* *Asst. Secy., Marine Department.*

GOVERNMENT OF BENGAL—MARINE DEPARTMENT.

NOTICE TO MARINERS—No. 245.

[Third Publication.]

INDIA, EAST—MADRAS COAST.

Masulipatam light—Date of alteration postponed.

WITH reference to Notice to Mariners No. 41, dated the 22nd February last, issued by this office, the Presidency Port Officer, Madras, has given further notice (No. 44 of 1902) that the alteration of the light at Masulipatam is postponed. Further notice will be given of the date from which the intended alteration will take place.

E. J. BEAUMONT, COMDR., R.I.M.,
Port Officer of Calcutta.

Published for general information.

C. B. BAYLEY,
Asst. Secy., Marine Department.

CALCUTTA, *the 13th August 1902.*

GOVERNMENT OF BENGAL—MARINE DEPARTMENT.

NOTICE TO MARINERS—No. 246.

[Third Publication.]

INDIA, EAST—COROMANDEL COAST.

Cuddalore—Alteration of the character of light.

THE Presidency Port Officer, Madras, has given notice (No. 45 of 1902) that from and after 1st October 1902, the light at Cuddalore will be altered from D 6th Order red fixed to D 4th Order white occulting showing four occultations every minute visible from all directions seaward, distance 12 miles.

E. J. BEAUMONT, COMDR., R.I.M.,
Port Officer of Calcutta.

Published for general information.

C. B. BAYLEY,
Asst. Secy., Marine Department.

CALCUTTA, *the 13th August 1902.*

GOVERNMENT OF BENGAL—MARINE DEPARTMENT.

NOTICE TO MARINERS—No. 247.

[Third Publication.]

INDIA, EAST—MADRAS COAST.

Vizagapatam—A temporary white light exhibited.

THE Presidency Port Officer, Madras, has given notice (No. 46 of 1902) that a temporary white light visible 10 miles in clear weather will be exhibited (when information is received from the Agents of Steam Ship Companies that a steamer is expected) from the roof of a small white-washed building near the Port Office at the Port of Vizagapatam, as a mark for the anchorage off the port.

E. J. BEAUMONT, COMDR., R.I.M.,
Port Officer of Calcutta.

Published for general information.

C. B. BAYLEY,
Asst. Secy., Marine Department.

CALCUTTA, *the 13th August 1902.*

GOVERNMENT OF BENGAL—MARINE DEPARTMENT.

NOTICE TO MARINERS—No. 248

[Third Publication.]

INDIA, SOUTH-EAST—CEYLON, NORTH-WEST COAST.

Chuttram—Erratum in position given.

WITH reference to Notice to Mariners No. 194, dated the 30th June last, issued by this Office, the Presidency Port Officer, Madras, has given further notice (No. 47 of 1902) as follows.—

For "Chuttram" in Long. 80° 37′
Read "Chuttram" in Long. 79° 23.′

E. J. BEAUMONT, COMDR., R.I.M.,
Port Officer of Calcutta.

Published for general information.

C. B. BAYLEY,
Asst. Secy., Marine Department.

CALCUTTA, *the 13th August 1902.*

GOVERNMENT OF BENGAL—MARINE DEPARTMENT.

NOTICE TO MARINERS—No. 249.

[Third Publication.]

INDIA, WEST—Sind coast.

Approach to Karachi harbour—Less water reported.

The Bombay Government has given notice (No. 93 of 1902) that the Captain of H. M. S. *Lapwing* reports having, on 14th July 1902, obtained 4 to 5 fathoms less water than shown on the chart, Cape Monze to Kediwari Mouth, No. 41, in the following approximate positions :—

Manora Point N. 53½° E. (true) distant 8 miles 6¾ fathoms.
Ditto N. 54° E. (true) distant 7 miles 8 fathoms.
Ditto N. 55° E. (true) distant 6 miles 6¾ fathoms.
Ditto N. 53° E. (true) distant 4 miles 7 fathoms.

The soundings are not reduced.

This Notice affects the following Admiralty Charts :—Cape Monze to Kediwari Mouth, No. 41; Maskat to Karáchi, No. 38, and West Coast of Hindustan Pilot, 4th Edition, 1898, page 304.

E. J. Beaumont, Comdr., r.i.m.,
Port Officer of Calcutta.

Published for general information.

C. B. Bayley,
Calcutta, *the 13th August 1902.* *Asst. Secy., Marine Department.*

GOVERNMENT OF BENGAL—MARINE DEPARTMENT.

NOTICE TO MARINERS—No. 250.

[Third Publication.]

AFRICA, NORTH-EAST—Gulf of Aden.

Aden harbour—Datum pile washed away.

With reference to Notice to Mariners No. 118, dated the 2nd May last, issued by this Office, the Bombay Government has given notice (No. 97 of 1902) that the Datum pile has been washed away: the patch on which it was erected is now marked by a buoy painted red.

E. J. Beaumont, Comdr., r.i.m.,
Port Officer of Calcutta.

Published for general information.

C. B. Bayley,
Calcutta, *the 13th August 1902.* *Asst. Secy., Marine Department.*

GOVERNMENT OF BENGAL—MARINE DEPARTMENT.

NOTICE TO MARINERS—No. 251.

[Third Publication.]

BAY OF BENGAL—Burma coast.

Baragua flat lightship.

Telegraphic communications have been received from the Principal Port Officer, Burma, Rangoon, stating that the Baragua flat lightship, which was off its station on the 9th instant, was replaced in correct position on the evening of the 12th idem.

E. J. Beaumont, Comdr., r.i.m.,
Port Officer of Calcutta.

Published for general information.

C. B. Bayley,
Calcutta, *the 16th August 1902.* *Asst. Secy., Marine Department.*

REGISTERED No., 0209.]

No. 36 of 1902.

SUPPLEMENT TO

The Calcutta Gazette.

WEDNESDAY, SEPTEMBER 3, 1902.

OFFICIAL PAPERS.

[Non-Subscribers to the GAZETTE *may receive the* SUPPLEMENT *separately on payment of five rupees per annum if delivered in Calcutta, or seven rupees and eight annas if sent by post.]*

CONTENTS.

	Page
WEATHER and Crop Report for the week ending the 1st September 1902	1229
Statement showing the quantities of the Principal Staples of Traffic imported into and exported from Calcutta from the interior in the three months April to June 1902	1234
Statement showing heights over mean sea-level and low water in the rivers Ganges, Bhagirathi, Jalangi and Brahmaputra for the month of July 1902	1241
CIRCULAR and Eastern Canal for the week ending Saturday the 30th August 1902	1242
Results of the Meteorological Observations taken at the Alipore Observatory from 17th to 23rd and 24th to 30th August 1902	1243
Bengal Central Railway during the month of June 1902 ...	1245
Segowlie-Raksaul Branch Railway for the month of April 1902	1247
Weekly Return of Traffic Receipts on Indian Railways ...	1249

WEATHER AND CROP REPORT.

For the week ending the 1st September 1902.

Burdwan.—Rainfall at Sadar 1·67, Kalna 1·70, Katwa 0·82, Raniganj 2·25. Weather cloudy and showery. Transplantation still continues. Harvesting of *aus* paddy begun in places. Fodder and water sufficient. Condition of cattle good. Common rice sells at 10½ seers per rupee.

Birbhum.—Rainfall at Sadar 3·12, Rampur Hât 0·16. Weather monsoonic. Paddy crop and sugarcane doing well. Fodder sufficient. Common rice sells at 12 seers per rupee.

Bankura.—Rainfall at Sadar 1·36. Condition of standing paddy and sugarcane crops good. Fodder and water sufficient. Common rice sells at 11 seers 10 chitaks per rupee.

Midnapore.—Rainfall at Sadar 5·49, Contai 2·68, Tamluk 8·65, Ghatal 4·31. Weather hot and cloudy. Transplantation of *aman* almost finished. Agricultural prospects good. Fodder and water sufficient. Cattle-disease reported from Hinpur thana. Common rice sells as follows:—

	Srs.	ch.	
Sadar	13	8	per rupee.
Contai	12	0	
Ghatal	11	8	
Tamluk	11	0	

Hooghly.—Rainfall at Sadar 3·47, Serampore 4·66, Arambagh 2·29. Weather seasonable. Transplantation of *aman* still continues. Harvesting of *aus* and steeping of jute commenced. Prospect of standing crops good. Fodder and water sufficient. Common rice sells as follows :—

	Srs.	ch.	
Sadar	10	0	per rupee.
Serampore	10	7	
Arambagh	11	9	

Howrah.—Rainfall at Sadar 3·79, Ulubaria 5·41. Fall general. Transplantation of *aman* paddy still going on. Harvesting of *aus* and jute going on and the latter is being steeped. Sugarcane progressing. Agricultural prospects good. Fodder and water-supply sufficient. No cattle-disease. Common rice sells on an average 11 seers everywhere in the district.

24-Parganas.—Rainfall at Sadar 3·66, Barasat 5·77, Basirhat 2·69, Diamond Harbour 5·74. Heavy rain everywhere. State of standing crops good, but more rain still wanted in places. Prospects fair. *Aus* and jute being harvested and the latter is being steeped. Transplantation of *aman* continues. Common rice sells at 11 seers per rupee. Condition of cattle good. Supply of fodder and water sufficient.

Nadia.—Rainfall at Sadar 1·79, Ranaghat 2·28, Chuadanga 2·07, Meherpur 1·92, Kushtia 1·49. Harvesting of *aus* paddy and transplantation of *aman* paddy finished. Jute being cut and steeped. Prospects of standing crops good. No cattle-disease reported. Fodder and water sufficient. Common rice sells as follows :—

	Srs.	ch.	
Sadar	12	0	per rupee.
Ranaghat	11	0	
Chuadanga	11	8	
Meherpur	13	5	
Kushtia	11	5	

Murshidabad.—Rainfall at Sadar 1·62, Kandi ·85, Jangipur 1·03, Lalbagh 1·40. Weather seasonable. Transplantation of *haimanti* nearly over. Harvesting of *bhadoi* continues at Lalbagh. Prospects of sugarcane and jute good. No cattle-disease. Fodder and water sufficient. Common rice sells as follows :—

	Srs.	ch.	
Sadar	11	8	per rupee.
Kandi	12	8	
Jangipur	12	4	
Lalbagh	11	0	

Jessore.—Rainfall at Sadar 0·47, Jhenida 0·86, Magura 1·82, Narail 1·0, Bangaon report not received. Weather cloudy with occasional light showers. Prospects of crops generally fair. Harvesting of *aus* nearly completed. More rain wanted for the *aman*. Fodder and water sufficient. Cattle-disease reported from the Muhammadpur thana in Magura. Common rice sells as follows :—

	Srs.	ch.	
Sadar	12	8	per rupee.
Jhenida	12	0	
Magura	12	0	
Narail	10	12	

Khulna.—Rainfall at Sadar ·91, Bagerhat 2·77, Satkhira 1·77. Weather seasonable. Transplantation of *aman* and harvesting of *aus* continue. State of *aus*, sugarcane, and jute fair. Fodder and water sufficient. Cattle-disease reported from Paikgachha and Asasuni. Common rice sells as follows :—

	Srs.	ch.	
Sadar	11	4	per rupee
Bagerhat	12	0	
Satkhira	10	8	

Rajshahi.—Rainfall at Sadar 1·39, Nator 1·81, Naugaon 0·95. Weather hot. Prospects of standing rice and jute good. Transplantation of *aman* and harvesting of *bhadoi* and jute going on. Cattle-disease reported from Lalpur and Burigaon thanas. Common rice selling at 12 seers per rupee.

Dinajpur.—Rainfall at Sadar 0·60. Fall in the district general except at Thakurgaon. Maximum fall 1·51. Weather seasonable. Standing crops good. Transplanting of winter rice and steeping of jute continue. No cattle-disease. Fodder and water plentiful. Rice sells at 11½ seers per rupee.

Jalpaiguri.—Rainfall at Sadar ·85, Alipore Duars 1·79. Fall not general Weather hot. Transplantation of *haimanti* paddy nearly finished. Harvesting of *bhadoi* paddy continues. Cutting of jute going on. Common rice sells at 11 seers a rupee. Fodder and water sufficient. Cattle-disease prevails in Debiganj outpost.

Darjeeling.—Rainfall at Darjeeling 5·05, Kurseong 5·80, Siliguri 3·28. Weather seasonable. *Hills*—Maize and *bhadoi dhan* doing well. *Coota* and *bara marua*, *haimanti dhan* being cultivated. *Terai*—Transplanting of *haimanti* and *bhadoi* paddy progressing well. Prospect good. Coarse rice sells as follows:—

	Srs.	ch.	
Hills	8	0	per rupee.
Terai	10	0	

Maize sells at Darjeeling at 18 seers and at Kalimpong at 32 seers per rupee.

Rangpur.—Rainfall at Sadar 0·58, Gaibanda 0·53, Kurigram 0·34, Nilphamari 0 18. Weather very hot. Transplantation of *aman*, harvesting of *aus*, and cutting and steeping of jute going on. Flood water in Gaibanda subsiding. Fodder and water sufficient. Common rice sells as follows:—

	Srs.	ch.	
Sadar	10	8	per rupee.
Gaibanda	10	0	
Kurigram	12	0	
Nilphamari	10	8	

Bogra.—Rainfall at Sadar 0·80. Fall general. Weather hot and occasionally cloudy. Cutting of *aus* and jute and transplantation of *aman* continue. Prospects fair. Fodder and water sufficient. Common rice sells at 12 seers per rupee.

Pabna.—Rainfall at Sadar 1·44, Sirajganj 1·88. Fall general Weather cloudy and rainy. Prospects of standing crops fair. Harvesting of *aus* and jute continues. *Aman* sowing estimated 75 per cent. in Sadar. Fodder and water sufficient. Cattle-disease in Sadar. Common rice sells at 10 seers per rupee.

Dacca.—Rainfall at Sadar 3·57, Manikganj 3·47, Munshiganj 3·65, Narayanganj 2·28. Prospects of crops fair. Weather seasonable. Fodder available. No cattle-disease. Common rice sells at 11 seers per rupee.

Mymensingh.—Rainfall at Sadar 1·41, Jamalpur 1·42, Kishorganj 0·21, Netrokona 2·35, Tangail 2·90. Weather hot. Harvesting of *aus* and jute still continues. They have suffered from excessive rain. Twelve annas of *aman* rice transplanted and doing well. Fodder reported scarce from Netrokona subdivision, but sufficient elsewhere. No cattle-disease. Common rice selling as follows:—

	Srs.	ch.	
Sadar	10	4	per rupee.
Kishorganj	10	8	
Jamalpur	11	6	
Netrokona	12	0	
Tangail	10	4	

Faridpur.—Rainfall at Sadar 1·48, Goalundo 1·38, Madaripur 0·74. Weather very hot and sultry. State and prospects of crops good. Fodder sufficient. No cattle-disease. Common rice sells at 11 seers a rupee.

Backergunge.—Rainfall at Sadar 4·05. Fall general. Weather squally. Prospects fair. Transplantation of *aman* continues. Cattle-disease in Matbari and Tuzamuddin thanas. Fodder sufficient. Common rice sells at 12 seers (*aman*) and 13 seers (*aus*) per rupee.

Tippera.—Rainfall at Sadar 6·33, Brahmanbaria 1·23, Chandpur 2·71. Prospects of standing crops good. Harvesting of *aus* and transplantation of *aman* not yet completed. Fodder and water sufficient. No cattle-disease. Common rice sells at 13 seers per rupee.

Noakhali.—Rainfall at Sadar 2·12, Feni 4·49. Harvesting of *aus* continues. Transplantation of *aman* in full swing. Prospects good. Cattle-disease at Sundip. Water sufficient. Fodder not so. Common rice sells at Sadar at 11 seers and at Feni at 13 seers per rupee.

Chittagong.—Rainfall at Sadar 1·85, Cox's Bazar 1·73. *Aus dhan* is being reaped. *Aman dhan* is being sown. Water and fodder sufficient. Common rice selling at 12 seers 11 chitaks per rupee.

Chittagong Hill Tracts.—Rainfall at Sadar 2·50. Fall general. Weather fair with showery. Harvesting of *joom* paddy continues all round. Prospects good. No cattle-disease, Rice sells at 13 seers per rupee.

No

Imports of Principal Articles into Calcutta by Rail, Road, River,

Whence imported	Food-grains								Fibrous products		Oilseeds	
	Rice and paddy			Wheat	Wheat flour	Gram and pulse	Other food-grains	Total	Jute, raw	Gunny-bags	Linseed	Mustard seed
	Rice	Paddy*	Total (in rice)									
Bengal	Mds	Mds	Mds	Mds	Mds	Mds	Mds	Mds	Mds	No	Mds	Mds
Burdwan	137,350	88,070	192,403	1,896	8	5,500	8	190,515	.....	73,640	6,547	335
Birbhum	167,395	1,363	168,247	734	8	745	.....	169,734	.....	11,445	.....	.....
Midnapore	447,243	15,584	456,983	145	.....	2,434	6	459,568	2,102	29,570	7,387	552
Hooghly	353,755	34,667	375,432	3,302	16	18,339	129	397,218	31,371	1,814,077	10,089	14,918
24-Parganas	760,697	35,277	795,245	...	65	3,494	.....	798,804	38,943	2,820,511	7,534	598
Nadia	10,845	2,902	12,699	118,479	1,530	577,527	6,715	716,956	20,645	31,715	238,718	6,778
Murshidabad	1,939	..	1,939	24,720	.....	40,256	1,119	68,034	5,272	770	7,944	3,687
Jessore	9,974	7,635	14,740	6,975	.....	16,427	.....	38,142	53,197	3,415	28,013	7,847
Khulna	2,504	5,835	6,144	.....	.....	200	.....	6,344	529	560	133	.....
Rajshahi	53	1	54	6,726	.....	16,089	.....	24,800	42,939	1,190	30,687	7,755
Dinajpur	6,846	.....	6,846	.....	.....	22	.....	6,868	7,214	221,050	.....	2,286
Jalpaiguri	123	.....	123	.....	.....	.....	.....	123	90,342	66,360	163	4,096
Darjeeling	509	.....	509	.....	.....	.....	.....	509	92,468	19,600	.....	.....
Rangpur	.....	.....	.....	4,257	.....	104	.....	4,361	225,981	4,375	3,360	30,390
Bogra	3,404	.....	3,404	.....	.....	608	240	4,342	41,485	2,500	2,735	13,624
Pabna	3	3	5	881	.....	6,111	.....	6,407	656,184	25,855	21,177	36,023
Cooch Behar	.....	.....	.....	.....	.....	104	.....	104	19,017	280	.....	1,679
Dacca	213	...	213	1,253	...	332	.....	1,808	1,097,910	11,090	11,290	28,909
Mymensingh	...	665	416	...	...	139	.....	555	275,676	2,765	3,114	63,859
Faridpur	2,607	497	2,911	25,179	9,434	38,368	201	76,093	209,457	12,495	62,335	57,419
Backergunge	211,357	800	211,857	.....	...	...	.	211,857	4,259	3,075	993	.....
Tippera	61	...	61	.....	.	.....	.	61	40,443	1,085	6,158	158
Noakhali	2,139	...	2,139	.....	.....	.....	...	2,139	1,167	850	8,491	.....
Chittagong	6	11	12	.....	.....	.....	.....	12	.....	2,450	.....	.....
Total Bengal	2,119,179	213,280	2,252,472	193,747	11,067	728,209	8,418	3,194,513	2,974,481	5,159,513	456,876	281,152
Bihar												
Patna	7	.....	7	284	.....	143,160	713	144,203	.....	910	62,085	63,331
Gaya	39	.....	39	.....	.....	946	.....	985	.....	2,605	80,904	1,019
Shahabad	..	.....	...	...	.....	64,665	1,348	66,013	.....	735	54,778	672
Saran	36	.....	36	283	.....	4,245	1,445	6,009	. .	140	28,061	14,836
Champaran	.	.....	.....	.....	.....	1,579	.	1,579	.....	3,900	82,483	13,973
Muzaffarpur	24	.....	24	.....	.....	19,342	20	19,436	.....	2,005	97,760	25,571
Darbhanga	6	.....	6	.....	.....	25,451	.	25,457	..	2,555	110,104	63,479
Monghyr	...	.....	.	2,193	.....	146,681	1,798	150,682	..	35	84,928	107,569
Bhagalpur	47	.....	47	24,128	... ..	14,120	1,406	39,759	5,598	1,390	43,396	111,360
Purnea	8	... ..	8	1,514	.....	635	..	2,157	32,343	5,635	6,940	180,970
Malda	15	.. .	15	8,078	.. ...	7,953	1,099	17,145	531	910	2,724	1,079
Sonthal Parganas	20	.....	20	127,438	...	43,137	736	171,393	4,600	2,765	9,370	83,830
Total Bihar	203	.	202	163,906	.....	476,983	8,717	649,808	41,071	23,765	683,257	617,089
Orissa												
Cuttack	11,171	...	11,171	.....	.....	50,536	.....	61,707	118	105	30	1,284
Balasore	191,455	10,126	197,784	365	.....	18,235	.....	216,384	7,541	3,420	2,010	382
Puri	8,407	.....	8,407	.....	.....	1,158	.. ...	9,565	.....	.....	.....	.....
Total Orissa	211,033	10,126	217,362	365	.....	69,929	...	287,656	7,659	3,525	2,040	1,666
Chota Nagpur												
Hazaribagh	.....	.....	.....	.....	... ..	... .	. .	... ..	.....	700	431	.....
Manbhum	38	.....	38	.....	.....			38	.....	350	.....	... .
Singhbhum	6,374	.....	6,374	.....	.....	63		6,437	.....	700	1,938	523
Total Chota Nagpur	6,412	.	6,412	.....	.....	63	. .	6,475	... ..	1,750	2,369	523
Total from the Provinces under the Lieutenant-Governor of Bengal	2,336,819	223,406	2,476,448	358,018	11,067	1,275,784	17,135	4,138,452	3,023,211	5,188,353	1,144,542	901,030
Other Provinces and Places												
Burma	380,223	380,203	507,849	.....	.....	6,887	.....	604,735	.....	1,100	... ..	8
Assam	30,767	.....	30,767	... ...	.....	12	.....	30,779	20,552	3,815	61,732	193,016
U. P. of Agra and Oudh.	357	.....	357	1,095,231	2,583	620,639	1,219	1,720,009	404	11,900	1,296,537	639,504
Panjab	101	.....	101	9,821	.....	4,530	.....	14,158	.....	..	1,016	19,163
Central Provinces	17,279	... ...	17,272	5,160	1	257	.	22,695	... .	455	8,874	15,500
Rajputana and Central India.	.....	.....	.....	.....	1	7,078	.. .	7,079	26	. ..	840	3,716
Bombay	.....	.....	... .	.....	.....	7,801	.....	7,801	.....	.....	.....	.....
Madras	12,729	.....	12,729	.....	71	110,888	.....	123,688	.....	.....	.....	.....
Pondicherry	...	.....	... .	.....	.....	.....	.....	.....	.....	.....	.....	.....
Total ... 1902	2,788,267	603,608	3,135,5.2	1,468,226	13,723	2,033,822	18,354	6,609,647	3,044,193	5,205,623	2,513,641	1,770,737
Total ... 1901	2,371,853	1,005,332	2,558,608	925,591	10,908	1,458,795	1 ·1,521	5,058,514	1,747,982	3,792,489	3,004,893	1,300,398
Total ... 1900	3,564,094	785,679	4,055,142	636,571	2,864	1,460,169	90,313	6,295,050	901,782	7,439,228	3,801,205	1,183,352

* One maund of paddy is equivalent to 25 seers of rice

I

Canal, and Sea (coastwise) in the three months April to June 1902

Tea, Indian	Cotton, raw	Silk, raw	Coal and coke	Indigo	Sugar		Tobacco		Whence imported
					Refined	Unrefined	Unmanufactured	Manufactured	
Mds	Mds	Mds	Mds	Mds	Mds	Mds	Mds	Mds	BENGAL
.....	12	.....	10,037,710	.. ..	.....	16	510	8	Burdwan
.....	20	184	.. ..	.. ..	.....	21	74	.....	Birbhum
.....	1,355	633	26,477	.. ..	.....	11,267	986	124	Midnapore
.....	1,230	4	11,807	.....	408	20,271	15,338	2,774	Hooghly
1	16,152	.....	18,278	.....	1,979	70,200	8,680	1,672	24-Parganas
.....	2,623	.....	230	....	76	3,592	6,745	.....	Nadia
.....	.....	2,379	...	.....	.....	20	112	.....	Murshidabad
.....	1,101	.....	...	.....	.....	18,932	4,674	.....	Jessore
.....	.....	.....	.....	.....	.....	27,050	... ..	.....	Khulna
.....	31	1,349	.....	.....	.....	.....	6	.....	Rajshahi
.....	61	.....	.....	.....	.....	1	... ..	.....	Dinajpur
.....	.....	.....	.....	.....	.....	.....	19,128	3	Jalpaiguri
46,218	.....	.....	.....	.....	.....	.....	1,242	1	Darjeeling
42,482	...	... ..	.....	.....	.....	22	56,330	.....	Rangpur
.....	16,875	.....	.....	.....	.....	.	11	.....	Bogra
.....	.....	... ..	.....	.....	.....	.....	935	.....	Pabna
.. ...	753	.....	.....	.....	.....	.....	1,241	.....	Cooch Behar
.....	.....	.....	.....	.....	.....	.....	.....	... ..	Dacca
.....	15,681	.....	.....	.....	.....	.....	.....	.....	Mymensingh
.....	106	.....	.....	.....	.....	... ..	.....	.....	Faridpur
.....	2,038	.....	.....	.....	.....	700	10	... ..	Backergunge
.....	152	.....	.....	.....	.....	... ..	... ..	.....	Tipperah
45	153	.....	.....	.....	.....	.....	... ..	.....	Noakhali
.....	375	.....	.....	.....	.....	.....	.....	.....	Chittagong
924	7,559	.. ..	.....	.....	.....	.....	.....	.....	
89,665	66,365	4,540	10,164,522	. .	2,463	158,002	117,823	4,483	Total Bengal
									BIHAR
.....	1,953	.....	.....	4	.....	3,033	1,400	2,521	Patna
.....	31	.....	.....	.....	.....	557	...	575	Gaya
.....	51	.....	.....	.....	.....	7,893	305	.....	Shahabad
.....	.....	.....	.....	.	.....	1,282	16	.....	Saran
.....	235	.....	.....	388	.....	.....	.....	.....	Champaran
2	26	.....	.....	3	.....	8	2,020	.....	Muzaffarpur
.....	.....	.....	.....	... ..	.....	1,147	3,150	.....	Darbhanga
.....	1,170	.....	.....	.....	.....	30	534	8	Monghyr
.....	.....	.....	.....	2	.....	... .	.	... .	Bhagalpur
.....	.....	.....	.....	3	.....	... ..	38,139	.....	Purnea
.....	9	25	.....	.....	.....	... ..	.....	.....	Malda
.....	59	.....	560	.....	.....	... ..	.	234	Sonthal Parganas
2	3,534	25	560	400	.....	13,290	45,620	3,338	Total Bihar
									ORISSA
.....	223	.....	.....	.....	.....	.....	47	.....	Cuttack
.....	406	.....	.....	.....	.....	.....	230	.....	Balasore
.....	.....	.....	.....	.....	.....	.....	... ..	.....	Puri
.....	629	.....	.....	.....	.....	.....	277	.....	Total Orissa
									CHOTA NAGPUR
.....	... .	.....	524,796	.....	.....	.....	.....	... ..	Hazaribagh
169	4	.....	3,783,709	86	.....	... .	.....	.....	Manbhum
.....	130	.....	.....	.....	.....	.....	4	.....	Singhbhum
169	134	.....	4,308,505	86	.....	.....	4	.....	Total Chota Nagpur
89,836	70,661	4,574	14,473,587	486	2,463	171,382	163,223	7,830	Total from the Provinces under the Lieutenant-Governor of Bengal
									OTHER PROVINCES AND PLACES
.....	16,672	....	.....	4	1,331	... ..	585	140	Burma
104,607	8,855	234	79,407	.....	.....	.....	.....	.....	Assam
423	119,380	.....	.....	13	5	2,025	778	8	U. P. of Agra and Oudh
.....	.....	.....	.....	.....	.....	.....	20	.....	Panjab
157	23,371	.. ..	.....	.....	.....	.....	3	.... .	Central Provinces
... ..	9,384	.....	5	.....	.....	.....	.....	... ..	Rajputana and Central India
.....	24,237	.....	.....	.....	.....	.....	.....	.....	
.....	974	17	.....	.....	2,154	.....	10	78	Bombay
.....	5,870	....	.....	.....	13,684	.....	150	350	Madras
.....	.....	.....	.....	.....	.....	.....	... .	5	Pondicherry
195,082	290,982	4,825	14,552,999	503	19,637	173,407	164,738	8,326	1902 } Total
153,861	172,670	3,519	18,289,200	460	33,622	194,523	218,124	9,005	1901 }
170,434	80,390	4,191	18,233,898	445	47,022	174,839	182,673	10,000	1900 }

No II

Statement of the Routes by which the Articles enumerated in table No I were imported into Calcutta in the three months April to June 1902

Routes		Food-grains						Fibrous products		Oilseeds	
		Rice	Paddy	Wheat	Wheat flour	Gram and pulse	Other food-grains	Jute, raw	Gunny-bags	Linseed	Mustard seed
		Mds	Mds	Mds	Mds	Mds	Mds	Mds	No	Mds	Mds
By boats		1,106,856	75,452	100,150		221,048	1,910	333,640	4,040,448	116,776	53,345
,, river steamers ...		26,151	2,300	2,715	14	7,642	601	1,346,604	43,470	70,206	271,071
,, rail	E. I. Railway	303,816	84 036	1,289,003	2,607	1,145,734	11,047	176,705	130,445	1,985,444	1,201,802
	E. B S. Railway	134,196	14	75,089	10,964	450,481	4,790	1,092,751	886,410	305,243	159,925
	Assam-Bengal Railway	63	11	.....	. ...	... .	... ..		3,920	6,006	4,9 8
	Bengal-Nagpur Railway	283,775	14,597	360	2	110,032	6	162	7,910	13,425	19,631
	Bengal Central Railway	1,447		...	.....	1,572		43,058	2,520	9,232	47
,, road		464,934	43,357	... .	65	4,623	.....	43,605	87,100	6,550	. .
,, sea ,, ,, ...		437,029	383,841	.. ...	71	80,390	..	7,480	3,400	616	8
Total ...	1902 ...	2,758,857	603,608	1,468,220	13,723	2,033,822	18,354	3,044,193	5,205,623	2,513,041	1,770,737
	1901 ...	2,371,352	1,005,332	923,591	10,908	1,458,796	101,521	1,747,932	3,702,489	3,004,898	1,300,398
	1900 ...	3,564,094	785,679	686,571	2,864	1,480,169	90,313	901,782	7,439,222	3,801,305	1,133,352

Routes		Tea, Indian	Cotton, raw	Silk, raw	Coal and Coke	Indigo	Sugar		Tobacco	
							Refined	Unrefined	Unmanufactured	Manufactured
		Mds	Mds	Mds	Mds	Mds	Mds	Mds	Mds	Mds
By boats		.....	9,873	393	27,965	.	2,463	71,947	16,488	3,602
,, river steamers ...		58,401	37,230	244	79,407	.	5	698	1,756	799
rail	E. I. Railway	750	171,097	2,563	14,406,775	499	... ..	15,326	17,931	1,056
	E. B. S. Railway	126,578	13,389	1,536	.....		... ..	4,855	109,305	4
	Assam-Bengal Railway	8,430	152	72	.....	.....	.....	.....	.....	.....
	Bengal-Nagpur Railway	.....	10,278	.. .	18,078		207	....	51	... .
	Bengal Central Railway	.....	1,162	.....	.. ..	.....	.....	18,944	197	.....
,, road		.....	6,635	.....	21,080	.....	.....	61,697	18,176	2,361
,, sea ... ,, ...		923	81,066	17	. .	4	16,962	.	924	573
Total ...	1902 ..	195,082	280,932	4,825	14 552,999	503	19 637	175,407	164,728	8,395
	1901 ..	153,861	172,670	3,519	18,289,200	460	33,692	104,523	218,124	9,005
	1900 ...	170,436	80,390	4,101	18,228,898	445	47,022	174,189	182,673	10,006

No. III

Imports of certain Articles into Calcutta by Sea (Foreign and Coastwise) in the three months April to June 1902

	Cotton piece-goods		Cotton yarn		Salt	Kerosene oil
	European	Indian	European	Indian		
	Rs	Rs	Mds	Mds	Mds	Mds
From Foreign Countries—						
United Kingdom	3,72,31,151	.....	23,047	.....	1,121,934	283
Other countries	11,51,296	.....	1,766	.....	1,268,527	877,018
Total	3,83,82,447	.....	24,813	.....	2,390,461	877,301
Coastwise—						
Bombay	53,880	5,36,464	.....	45,046	224,510	.....
Sind	24,097	.....	.....	.....	.....	.....
Madras	55,128	56,896	.....	.....	.....	.....
Other ports in Madras	300	.....	.....	.....	.....	.....
Burma	1,01,822	.....	.....	.....	.....	225,889
Pondichery	1,350	.....	.....	.....	.....	.....
Karikal	34	.....	.....	.....	.....	.....
Other Ports	.....	.....	.....	12	.....	.....
Total	2,37,511	5,93,360	.....	45,058	224,510	225,889
Total 1903	3,86,19,958	5,93,360	24,813	45,058	2,614,971	1,103,190
Total 1901	3,26,37,693	5,76,431	46,374	48,203	2,402,420	1,216,696
Total 1900	3,09,93,992	10,63,418	37,600	29,512	2,237,798	905,386

No. IV

Exports of Principal Articles from Calcutta by Sea (coastwise and to foreign countries) in the three months April to June 1902

	Rice	Paddy	Total (in rice)	Wheat	Wheat flour	Gram and pulse	Other food-grains	Total	Jute, raw	Gunny-bags
Coastwise—	Mds	Mds	Mds	Mds	Mds	Mds	Mds	Mds	Mds	No.
Bombay	58,005	.....	58,005	22,482	.....	19,408	.....	99,985	5	2,250,500
Sind	.....	... ...	.....	.....	... .	.....	.....	...	.....	1,255,450
Madras	20	.....	20	3,833	1,921	116,589	10,541	132,904	.....	225,500
Other ports in Madras ..	41,765	.....	41,765	381	2,858	17,784	...	62,888	.....	401 550
Burma	9,171	.....	9,171	2,036	31,229	63,503	3,639	110,478	143	6,077,800
Pondichery ...	.....	... ..	.....	39	581	1,377	.....	1,997	.....	55,500
Allepey ...	778	.....	778	... ..	.....	...	.....	778	28	...
Other Indian ports	331	.....	331	615	2,352	6,335	10	9,073	.....	93,360
Total ...	110,070	...	110,070	30,286	39 071	225,086	14,190	418,703	176	11,049,660
To Foreign countries—										
United Kingdom	144 586	.. ..	144 586	529,166	.....	566,703	..	1,240,455	817,776	8,136,710
Other countries	1,674,460	15	1,674,469	79,859	35,872	152,775	42,098	1,985,063	1,621,268	50,707,705
Total ...	1,819,046	15	1,819,055	609,025	35,872	719,478	42,088	3,225,518	2,439,041	58 844,455
Total .. 1902 ...	1,929,116	15	1,929,125	639,311	74,943	944,564	56,278	3,644,221	2,439,220	69,894,115
Total .. 1901 ..	1,646,361	36	1,646,380	38,904	74,033	365,283	34,613	2,159,213	1,626,666	39,503,584
Total .. 1900 ..	3,504,537	122,921	3,671,361	77,502	45,054	615,002	29,866	4,439,385	1,084,930	58,278,703

	Linseed	Mustard seed	Tea, Indian	Cotton, raw	Silk, raw	Coal and coke	Indigo	Sugar		Tobacco	
								Refined	Unrefined	Unmanufactured	Manufactured
Coastwise—	Mds	Mds	Mds	Mds	Mds	Mds	Mds	Mds	Mds	Mds	Mds
Bombay	. . ..	2,645	5,006	.....	.....	5,115,400	27	660	... ..	.....	48
Sind	.....	... ..	121	.....	.....	755,385	.....	.....	.. ...	.....	63
Madras	10	99	94	.....	53	1,080,232	83	231	.. ...	.....	15
Other ports in Madras ...	.... .	8,870	2	.....	... ..	631,120	.....	42	..	2	98
Burma	61	10	781	237	42	2,413,413	4	2,202	2,414	16,738	818
Pondichery ..	.....	10	.....	.....	.....	.....	.... .	.....		.....	.. ...
Allepey ...	.....	.....	.....	.....	... ..	... ..	.....	.....	....	....	.....
Other Indian ports	1	.....	... ..	.....	...	96,175	.....	7,530	1,034	3,021	114
Total ..	72	11,634	6,004	237	95	10,091,664	114	10,665	3,448	19,751	1,186
To Foreign countries—											
United Kingdom	1,763,363	135,295	110,388	5,518	1,197	.....	2,042	...	.....	... ..	176
Other countries	1,330,637	639,406	12,216	143,434	3,221	3,830,503	2,089	819	24	11,400	521
Total ..	3,094,000	774,701	122,604	148,952	4,418	3,830,503	4,131	819	24	11,400	697
Total ... 1902 ..	3,094,072	786,335	128,608	149,189	4,513	13,931,187	4,245	11,484	3,472	31,151	1,883
Total ... 1901 ..	2,892,082	28 723	93,466	95,422	3 881	13,537,385	3,170	8,760	5,042	44,064	1,480
Total ... 19 0 ...	3,913,873	100,141	122,428	68 613	3,690	11,385,828	2,415	8,724	5,375	33,837	2,789

No V

Exports of certain Articles from Calcutta by Rail, Road, River, Canal, and Sea (coastwise) in the three months April to June 1902

Whither exported	Cotton piece-goods		Cotton yarn		Salt	Kerosene oil		Gunny-bags
	European	Indian	European	Indian		From Calcutta	From Budge-Budge*	
Bengal	Rs	Rs	Mds	Mds	Mds	Mds	Mds	No
Burdwan	6,42,173	.....	476	3,538	109,379	407	34,786	237,706
Birbhum	4,22,687	3,351	309	3,613	68,163	85	12,403	127,785
Midnapore	6,55,305	16,859	3,556	2,441	67,620	417	9,030	83,870
Hooghly	3,03,630	16,702	700	100	19,169	11,963	9,896	50,640
24-Parganas	8,29,250	10,648	2,065	.....	44,882	22,244	9,761	70,000
Calcutta	.....	.....	.....	.....	.....	.....	213,128	.....
Nadia	7,98,858	.....	5,542	433	87,307	3,303	27,568	416,470
Murshidabad	2,87,737	730	96	500	34,135	45	12,358	131,050
Jessore	87,893	.....	1,279	.....	57,648	11,349	1,446	19,870
Khulna	32,854	.....	110	.....	8,713	1,473	595	1,260
Rajshahi	4,48,819	.....	549	96	44,586	67	8,601	98,385
Dinajpur	3,59,501	430	53	720	48,100	254	10,881	48,580
Jalpaiguri	2,85,549	1,090	161	1,087	34,736	752	14,632	23,345
Darjeeling	2,27,734	2,002	10	739	21,190	134	7,674	14,945
Rangpur	7,56,658	.....	786	737	83,592	514	22,316	69,230
Bogra	4,35,241	548	524	236	46,005	57	9,451	35,315
Pabna	3,81,284	.....	1,563	333	87,410	124	59,871	96,730
Cooch Behar	1,28,908	2,718	20	330	13,563	43	1,330	2,905
Dacca	10,94,031	255	7,205	166	164,426	558	64,649	46,550
Mymensingh	6,35,803	.....	451	563	43,304	83	8,194	52,950
Faridpur	8,76,810	667	4,335	384	53,594	14,318	9,549	107,065
Backergunge	5,40,295	.....	4,615	.....	153,543	11,408	25,205	57,120
Tippera	3,25,450	.....	2,053	98	10,033	1,758	6,750	33,050
Noakhali	1,64,706	.....	1,589	.....	6,783	1,501	.....	5,460
Chittagong	2,37,824	.....	1,579	.....	2	1	106	17,360
Total Bengal	1,04,50,149	65,099	40,320	16,114	1,238,410	82,748	580,230	1,947,253
Bihar								
Patna	8,53,852	731	636	1,775	32,567	325	43,001	572,250
Gaya	6,07,561	44,653	84	2,720	82,019	3	12,238	95,725
Shahabad	11,55,052	2,847	14	992	55,455	84	7,688	182,070
Saran	9,94,742	.....	387	705	61,706	207	7,955	44,345
Champaran	7,23,040	.....	30	972	70,488	150	12,207	81,725
Muzaffarpur	6,24,545	.....	.....	1,103	86,331	42	10,078	128,345
Darbhanga	8,12,808	.....	.....	2,285	102,168	122	20,846	157,920
Monghyr	6,04,508	182	83	2,698	64,100	157	17,853	324,135
Bhagalpur	7,72,849	1,072	224	1,212	80,127	43	20,115	295,190
Purnea	4,84,031	3,663	157	1,764	75,159	67	54,192	136,020
Malda	1,05,315	.....	615	432	13,001	58	2,804	35,705
Sonthal Parganas	4,81,267	.....	770	2,736	86,394	32	22,255	304,090
Total Bihar	83,11,280	53,148	2,959	19,458	807,605	1,185	240,342	2,359,320
Orissa								
Cuttack	60,080	3,472	.....	1,940	.....	2,055	5,250	20,585
Balasore	1,08,699	2,328	1,463	8,977	41,751	2,175	1,141	126,450
Puri	36,595	2,044	.....	2,507	.....	938	.....	1,785
Total Orissa	2,15,274	7,844	1,463	13,424	41,751	5,168	6,601	154,820
Chota Nagpur								
Hazaribagh	1,87,225	.....	24	1,202	30,472	54	3,740	2,380
Manbhum	2,25,999	238	.....	2,711	78,501	224	14,156	12,505
Singhbhum	22,229	1,703	.....	419	24,819	160	1,018	11,585
Total Chota Nagpur	4,05,453	1,941	24	4,422	137,792	438	18,914	26,830
Total Exports to the Provinces under the Lieutenant-Governor of Bengal	1,93,88,156	1,28,032	44,832	53,418	2,285,558	89,539	846,177	4,401,223
Other Provinces and places								
Burma	2,44,407	26,438	900	8,086	.....	398	.....	6,677,800
Assam	16,04,27	511	1,756	3,278	159,653	2,087	22,759	202,185
U P of Agra and Oudh	1,15,83,807	47,209	4,451	579	94,352	640	173,401	3,485,510
Panjab	20,89,946	18,705	1,263	207	42	67	9,717	3,012,535
Central Provinces	1,25,469	5,808	21	359	1	9,600	26,430	655,970
Rajputana and Central India	2,32,653	1,231	120	13	15	38	4,435	17,920
Berar	13,709	427	.....	.....	.....	.....	.....	1,200
Nizam's Territory	7,724	2,406	.....	.....	.....	.....	.....	7,805
Bombay	40,972	7,480	456	.....	.....	.....	.....	2,269,890
Madras	1,51,173	2,120	46	831	.....	8,833	1,447	764,635
Allepey	.....	.....	.....	.....	10	.....	.....	.....
Mysore	4,172	.....	.....	.....	.....	.....	.....	.....
Pondichery	1,761	.....	.....	.....	.....	.....	.....	55,500
Sind	.....	.....	.....	.....	.....	.....	.....	1,255,450
Port Blair	2,450	.....	5	23	.....	121	.....	.....
Total ... 1902	3,55,50,336	2,40,367	53,849	67,694	2,538,631	111,330	1,284,366	21,807,073
Total ... 1901	2,69,23,017	1,47,483	34,635	42,593	1,497,853	70,359	591,713	15,242 020
Total ... 1900	2,41,47,207	2,28,483	32,922	44,574	1,377,647	59,147	625,318	13,860,213

* Represents the trade registered at the traffic registering stations only

No VI

Statement of the Routes by which the Articles enumerated in table No. V were exported from Calcutta in the three months April to June 1902

		Cotton piece-goods		Cotton yarn		Salt	Kerosene Oil		Gunny-bags
		European	Indian	European	Indian		From Calcutta	From Budge-Budge	
		Rs	Rs	Mds	Mds	Mds	Mds	Mds	No
By boats		4,19,600	15,300	1,645	...	219,637	44,907	37,534	90,878
„ river steamers		36,79,306	547	19,912	1,307	527,821	1,542	197,906	216,325
„ rail	East Indian Railway	2,27,87,943	113,730	7,712	30,439	1,190,160	2,544	526,297	7,144,550
	Eastern Bengal State Railway	57,79,190	8,631	13,908	9,080	471,651	5,853	297,062	1,175,895
	Assam-Bengal Railway	5,24,567	.....	3,565	516	19,598	705	160	15,085
	Bengal-Nagpur Railway	3,63,990	34,144	.....	9,508	51,538	23,851	24,715	686,210
	Bengal Central Railway	79,272	.....	1,392	.....	26,124	6,538	.....	13,895
	North-Western Railway	2,32,620	73	401	.....	... ..	22	.....	1,362,305
	Railways under the Government Examiner of Railway Accounts, Bombay	2,63,476	17,369	154	95	.....	19	.....	47,880
„ road		8,20,008	18,735	1,744	.....	18,002	24,778	692	14,490
„ sea		5,79,262	31,838	3,456	16,640	14,710	586	.....	11,049,668
Total ...	1902 ...	3,55,50,336	2,40,367	53,840	67,684	2,539,631	111,330	1,084,366	21,807,673
	1901 ...	2,69,23,017	1,47,483	34,635	43,593	1,497,853	70,359	591,713	15,242,036
	1900 ...	3,41,47,207	2,28,483	32,923	44,574	1,377,647	59,147	635,316	13,369,213

September 1st, 1902

J. E. O'Conor,
Director-General of Statistics

W. C. Macpherson,
Offg. Secretary to the Government of Benga

IRRIGATION DEPARTMENT, BENGAL.

Statement showing heights over mean sea-level and low water in the rivers Ganges, Bhagirathi, Jalangi, and Brahmaputra for the month of July 1902, and the highest reading of each gauge over M. S. L. since 1876.

Date.	River Ganges.																River Bhagirathi.		River Jalangi.		River Brahmaputra.	
	Mirzapore.		Benares.		Buxar.		Dinapore.		Monghyr.		Sahibganj.		Rampur Boalia.		Goalundo.		Berhampore.		Sarupganj.		Gauhati.	
	Distance in miles.	From Allahabad ... 86	From Allahabad ... 134	From Mirzapore ... 48	From Benares 90		From Benares 177	From Buxar 87	From Benares 287	From Dinapore 110	From Benares 381	From Monghyr 94	From Benares 471	From Sahibganj ... 90	From Benares 601	From Rampur Boalia ... 120						
	Highest Gauge Reading.	26th August 1889. 253·47		26th August 1889. 241·66		31st August 1898. 200·63		5th September 1901. 169·73		8th September 1901. 129·60		23rd August 1879. 98·25		26th August 1879. 69·25		20th August 1893. 31·52		14th August 1890. 64·70		25th September 1900. 36·90		24th July 1900. 179·41	
		Height over zero of gauge.	Height over mean sea-level.	Height over zero of gauge.	Height over mean sea-level.	Height over zero of gauge.	Height over mean sea-level.	Height over zero of gauge.	Height over mean sea-level.	Height over zero of gauge.	Height over mean sea-level.	Height over zero of gauge.	Height over mean sea-level.	Height over zero of gauge.	Height over mean sea-level.	Height over zero of gauge.	Height over mean sea-level.	Height over zero of gauge.	Height over mean sea-level.	Height over zero of gauge.	Height over mean sea-level.	Height over zero of gauge.	Height over mean sea-level.
1	2	3	4	5	6	7	8	9	10	11	12	13	14	15	16	17	18	19	20	21	22	23	24
				Below zero.																			
1st ...	...	0·33	206·55	0·75	196·03	0·58	169·63	6·80	141·03	4·58	106·43	6·83	74·83	6·45	48·45	15·92	24·36	5·06	38·82	6·40	6·40	25·60	174·36
2nd ...	...	1·33	207·55	0·17	196·63	0·67	169·72	6·70	140·93	4·58	106·43	7·25	75·25	6·35	48·35	15·83	24·77	4·92	38·68	6·30	6·30	25·60	174·36
				Above zero.																			
3rd ...	...	1·83	208·05	0·67	197·47	1·08	170·13	7·20	141·43	4·92	106·77	7·00	75·00	6·27	48·27	15·83	24·77	4·67	38·41	6·10	6·10	25·45	174·21
4th ...	...	1·83	208·05	1·33	198·13	1·30	170·55	7·30	141·43	5·25	107·10	6·83	74·83	6·21	48·21	15·83	24·77	4·54	38·28	6·60	6·60	25·80	173·56
5th ...	...	2·00	208·22	1·58	198·38	2·17	171·22	7·70	141·93	5·75	107·60	7·17	75·17	6·19	48·19	15·83	24·77	4·58	38·32	7·30	7·30	24·30	173·06
6th ...	...	2·00	208·22	1·75	198·55	2·67	171·72	8·60	142·83	5·58	107·43	7·50	75·50	6·35	48·35	15·75	24·69	4·58	38·32	9·60	9·60	23·60	172·36
7th ...	...	2·00	208·22	1·83	198·63	3·08	172·13	9·30	143·53	5·67	107·52	7·92	75·92	6·80	48·80	15·75	24·69	7·58	41·32	10·90	10·90	23·00	171·76
8th ...	...	1·75	207·97	1·92	198·72	4·00	173·05	11·00	145·23	6·17	108·02	8·25	76·25	7·05	49·05	15·75	24·69	7·75	41·49	11·30	11·30	23·00	171·76
9th ...	...	2·75	208·97	1·58	198·38	4·00	173·05	13·90	148·03	8·25	110·10	8·50	76·50	7·19	49 19	15·67	24·61	7·50	41·24	11·20	11·20	23·70	172 46
10th ...	...	4·75	210 97	3·16	199·96	4·17	173·25	14·30	148·73	8·83	110·68	9·00	77·00	7·46	49·46	15·58	24·52	7·42	41·16	10·50	10·50	24 80	173·56
11th ...	...	6·25	212·47	4 00	200·38	3·17	174·23	15·40	149·83	9·25	111·10	10·00	78·00	9·99	51·40	15·83	24·77	8·42	42·16	9·30	9·30	25·80	174·86
12th ...	...	7·25	213 47	5 50	2 2 30	3·17	175·23	16 00	150·23	9·75	111·60	10·42	78·42	10 33	53·38	16·00	24·94	9·50	43·24	9·10	9·10	27·05	175·81
13th ...	...	7·75	213·97	6·00	202·80	6·67	175·72	16·00	150·23	10·08	111·93	10·42	78·42	10·90	53·90	16·17	25·11	10·12	43·86	9·30	9·30	27·70	176·46
14th ...	...	8·25	214·47	6 50	203·. 0	7·17	176·22	16 50	150·73	10·17	112·02	10·67	78·67	10·90	53·90	16·33	25·27	10·50	44·24	9·90	9·90	28·00	176·76
15th ...	...	8·92	215·14	7·50	204·30	7·75	176·80	16·80	151·03	10·33	112·18	10·75	78·75	11·05	53·05	16·83	25·77	10·75	44·49	10·90	10·90	28·00	176·76
16th ...	...	9·17	215·39	9·00	205·80	8·58	177·63	16·30	150·53	10·25	112·10	11·17	79·17	11·15	53·15	16·83	25·77	11 12	44 96	11·50	11·50	27·80	176·56
17th ...	...	9·25	215·47	11·50	209 30	9·58	178·63	16·10	150·33	10·17	112·02	11·25	79·25	11·54	53·50	17·08	26·02	11·71	45·45	11·60	11·60	27·60	176·36
14th ...	...	11·75	217·97	19·00	209·80	10·33	179·38	16·30	150·53	10 08	111·93	11·50	79·50	11·75	53·75	17 08	26·02	12·12	45·86	12·00	12·00	27·50	176·06
19th ...	...	9·75	215·97	12·50	209·30	11·25	180·57	23·90	155·13	10·42	112·27	11·58	79·58	11·85	53·85	17·17	26·11	12·39	46·03	13·90	13·90	27·90	175·76
20th ...	...	13·75	221·97	12·00	208·80	12·25	181·30	23·80	155 03	11·50	113·35	12·17	80·17	11·90	53·90	17·17	26·11	13·98	46·68	14·90	14·90	28·90	175·66
21st ...	...	25·00	233·23	16·60	213·30	13 60	181·05	20·40	154·63	13·42	115·27	13·50	81·50	13·70	55·70	17·33	26·27	14·33	48·07	15·50	15·80	28·90	175·66
22nd ...	...	26·50	233·73	24·00	221·30	17·25	186·30	20·40	154 63	13·17	116·02	13·92	81·92	14·41	56·40	17·42	26·36	15·59	49·24	16·60	16·80	27·00	174·76
23rd ...	...	27·50	233·72	26·00	222·80	20·75	189·80	24·40	158·63	13·17	116·02	14·58	82·58	14·60	56·60	17·50	26·44	16·58	50·38	18·00	18·00	27·00	175·76
24th ...	...	28·00	234 22	28·25	225·05	21·92	190·97	27·00	161·23	15·83	117·68	14·58	82·58	14·60	56·60	17·67	26·61	17·58	51·32	19·10	19·10	27·10	175·86
25th ...	...	31·33	237·55	30·00	226 80	22·42	192·47	26 70	160·93	16·33	118·18	17·17	85·17	15 75	57·75	18·00	26·94	19·07	53·41	19·70	19·70	27·39	176·06
26th ...	...	32·33	238·55	32 50	228 30	25·67	194·72	27·50	161·73	15·67	117·52	18·00	86·00	16·85	58·85	18·00	27·44	20·92	54·66	20·50	20·50	27·50	176 28
27th ...	...	31 33	237·55	31·00	227·80	25·08	195·13	28·30	162·53	20·08	121·23	16·58	86·58	17·60	59 60	18·75	27·69	21·92	55·66	21·60	21·60	27·80	176 58
28th ...	...	29·50	235·72	30·00	226 80	25·67	194·72	29·00	163·23	20·83	122·65	19·17	87·17	13·40	60·40	19·00	27·94	22·42	56·16	22·40	23·40	27·60	176·76
29th ...	...	28·50	234·72	28·00	224 80	24·83	193·88	28 30	162·53	20 67	122·52	19·17	87·17	19·25	60·25	19·00	27·94	23·75	57·40	23·70	23·70	27·90	176·06
30th ...	...	28 83	235·05	27 33	224·15	24·50	193·55	29·30	162·53	21·08	122·93	19·67	87·67	19·45	61·45	19·25	28·19	24·42	58·16	24·20	24·20	28·00	176·76
31st ...	...	27·83	234·05	26·50	223·30	24 00	193·05	29·20	162·43	20·83	122·68	20·00	88·00	19·75	61·75	19·25	28·19	24·42	58·16	24·20	24·20	28·00	176·76

Calcutta,
The 29th August 1902.

R. C. Edge,
Under-Secy. to the Govt. of Bengal.

GOVERNMENT OF BENGAL, IRRIGATION DEPARTMENT.

Approximate return of traffic on the Circular and Eastern Canals for the week ending Saturday, the 30th August 1902, as compared with the corresponding week of the previous year.

Nature of Cargo	Week ending Saturday, the 30th August 1902.			Week ending Saturday, the 31st August 1901.		
	Number of boats.	Weight of cargo.	Tollage.	Number of boats.	Weight of cargo.	Tollage.
		Mds.	Rs.		Mds.	Rs.
Rice and paddy	486	74,150	960	383	48,675	595
Jute	87	32,3(5*	425	122	27,150†	425
Firewood	63	56,725	851	132	72,225	1,083
Other articles	490	1,22,770	1,468	627	1,46,962	1,702
Total ...	1,126	2,85,950	3,704	1,264	2,97,012	3,805

* Weight by canal measurement, 34,550 maunds.
† Ditto ditto, 27,075 ,,

Results of the Meteorological Observations taken at the Alipore Observatory from 17th to 23rd August 1902.

Month.	Date.	Maximum in sun.	Number of hours of bright sunshine.	Mean pressure barometer at 32° Fahr.	Temperature.				Hygrometry.				Wind.		Rain.	Weather.
					Mean.	Maximum.	Range.	Minimum.	Mean wet bulb.	Vapour tension.	Dew point.	Humidity.	Prevailing direction.	Miles recorded.		
1902.		°		Inches.	°	°	°	°	°	Inch.	.	%			Inches.	
Aug.	17th	156·9	4·5	29·641	84·8	91·2	11·8	79·4	81·0	1·015	79·7	87	S by E and calm	49	0·34	Chiefly cloudy, o, d, p,
,,	18th	146·8	1·6	·612	82·1	88·3	9·2	79·1	80·1	1 000	79·2	91	SE by E and calm	54	1·34	Chiefly cloudy, o, g. d. p. t.
,,	19th	141·9	5·0	·611	82·6	87·7	9·4	78·3	79·9	0 985	78·8	88	ESE and SE ...	125	0·35	Partially cloud y, o, d, p.
,,	20th	144·1	4·2	·663	82·0	87·3	10·8	76·5	79·6	·982	78·7	90	SE and SE by S	99	1·01	Chiefly cloudy, p, t, L.
,,	21st	151·2	6·6	·710	83·9	89 5	11·7	77·8	79·3	·941	77·4	81	SE by S, SSE and S by W.	91	Nil	Partially cloudy.
,,	22nd	149·7	9·1	·654	86·1	92·2	12·8	79·4	80·2	·952	77·7	76	S by W and calm	40	Nil	Partially cloudy.
,,	23rd	149·9	8·4	·557	88·3	93 6	11·4	82·2	82·0	1·009	79·5	75	N by E and SW.	100	Nil	Partiall, cloudy.

	Inches.
The mean pressure of the seven days	29·635
The average pressure of the corresponding period for 24 years, Surveyor-General's Office	29·592
	Hours.
The total number of hours of bright sunshine	39·4
The maximum possible number of hours of sunshine	89·5
	°
The mean temperature of the seven days	84·2
The average temperature of the corresponding period for 24 years, Surveyor-General's Office	83·1
The extreme variation of temperature	17·1
The maximum temperature	93·6
	Miles.
The highest velocity of the wind in one hour	12
	%
The mean relative humidity	84
The average relative humidity of the corresponding period for 24 years, Surveyor-General's Office	87
	Inches.
The total fall of rain from 17th to 23rd August 1902	3·04
The average fall of the corresponding period for 24 years, Surveyor-General's Office	3·39
The total fall from 1st January to 23rd August 1902	46·24
The average fall of the corresponding period for 24 years, Surveyor-General's Office	45·68

The mean pressure, temperature, etc., are deduced from the traces of the Barograph and Thermograph and from eye observations.

The maximum and minimum temperatures are obtained from self-registering thermometers. All the thermometers are verified and the readings have been corrected to a standard constructed and verified at the Kew Observatory. They are exposed under a thatched shed open at the sides, and are suspended four feet above the ground.

The barometer readings are corrected approximately to those of the standard, Newman's No. 86, formerly at the Surveyor-General's Office.

The hygrometric elements are obtained from Tables III, IV, and V of the official tables computed in the Meteorological Office, and based on Regnault's modifications of August's formula.

The directions and the movement of the wind are taken from the trace of a Beckley's anemograph.

The mouth of the rain-gauge is one foot above the ground.

o, overcast; g, gloomy; d, drizzling rain; p, passing temporary showers; t, thunder; lightning.

METEOROLOGICAL OFFICE, GOVT. OF INDIA,
Alipore (Calcutta), the 25th August 1902.

G. W. KÜCHLER,
for Meteorological Reporter to the Govt. of India and Director-General of Indian Observatories.

Results of the Meteorological Observations taken at the Alipore Observatory from 24th to 30th August 1902.

Month.	Date.	Maximum in sun.	Number of hours of bright sunshine.	Mean pressure barometer at 32° Fahr.	Temperature. Mean.	Maximum.	Range.	Minimum.	Hygrometry. Mean wet bulb.	Vapour tension.	Dew point.	Humidity.	Wind. Prevailing direction.	Miles recorded.	Rain.	Weather
1902.		°		Inches.	°	°	°	°	°	Inches	°	%			Inches.	
Aug.	24th	141·1	3·5	29·471	82·7	86·4	8 0	78·4	79·6	0 972	78·4	87	ENE and ESE ...	223	1·84	Chiefly cloudy, o, g, d, p, ↯.
„	25th	129 1	0·2	·523	81 6	85·1	8·1	77·0	79 0	·959	78 0	89	ESE and SSE ...	141	0·30	Chiefly cloudy, o, d, p.
„	26th	143·9	2·2	·591	81·8	86·9	10·5	76 4	79 7	988	78·9	91	S and SE by S ...	91	2·26	Chiefly cloudy, o, d, p.
„	27th	146 9	7 4	·685	83 5	89 1	10 4	78·7	80 6	1·007	79·4	88	SE by S and SSE	60	0·58	Partially cloudy, o, d, p, t.
„	28th	154·2	7·1	·677	85·0	91·5	13·1	78·4	80·7	0 992	79 0	83	ESE and calm ...	30	0·01	Partially cloudy, d.
„	29th	149·0	9·0	·589	86·4	92·1	12 3	79 8	80 2	·948	77 6	75	S by W and S by E.	46	Nil	Chiefly clear.
„	30th	146 9	4·2	600	84·1	90·2	11·0	79·2	80 0	·970	78·8	83	S by E and N by E.	50	0 34	Chiefly cloudy, o, t, p, d, ↯.

	Inches.
The mean pressure of the seven days	29·591
The average pressure of the corresponding period for 24 years, Sur.-Genl.'s Office	29·627
	Hours.
The total number of hours of bright sunshine	33·6
The maximum possible number of hours of sunshine	88 5
	°
The mean temperature of the seven days	83 6
The average temperature of the corresponding period for 24 years, Sur.-Genl.'s Office	83·2
The extreme variation of temperature	15·7
The maximum temperature	92·1
	Miles.
The highest velocity of the wind in one hour	17
	%
The mean relative humidity	85
The average relative humidity of the corresponding period for 24 years, Sur.-Genl.'s Office	86
	Inches.
The total fall of rain from 24th to 30th August 1902	5·33
The average fall of the corresponding period for 24 years, Sur.-Genl.'s Office ..	2·34
The total fall from 1st January to 30th August 1902	51·57
The average fall of the corresponding period for 24 years, Sur.-Genl.'s Office ..	48·02

The mean pressure, temperature, &c., are deduced from the traces of the Barograph and Thermograph, and from eye observations.

The maximum and minimum temperatures are obtained from self-registering thermometers. All the thermometers are verified, and the readings have been corrected to a standard constructed and verified at the Kew Observatory. They are exposed under a thatched shed open at the sides, and are suspended four feet above the ground.

The barometer readings are corrected approximately to those of the standard, Newman's No. 86, formerly at the Surveyor-General's Office.

The hygrometric elements are obtained from Tables III, IV, and V of the official tables computed in the Meteorological Office, and based on Regnault's modifications of August's formula.

The directions and the movement of the wind are taken from the trace of a Beckley's anemograph.

The mouth of the rain-gauge is one foot above the ground.

o, overcast; g, gloomy; d, drizzling rain; p, passing temporary showers; t, thunder; ↯, lightning; K, thunderstorm.

G. W. KÜCHLER,

for Meteorological Reporter to the Govt. of India and Director-General of Indian Observatories.

METEOROLOGICAL OFFICE, GOVT. OF INDIA;
Alipore (Calcutta), the 1st September 1902.

BENGAL CENTRAL RAILWAY COMPANY, LIMITED.

Abstract of principal Commodities carried over the Bengal Central Railway during the month of June 1902, as compared with the same month of previous year.

Articles.	1902.		1901.		Total.		Increase.	Decrease.
	Up.	Down.	Up.	Down.	1902.	1901.		
	Tons.	Tons.	Tons.	Tons.	Tons.	Tons.	Tons.	Tons.
I.—Apparel, including drapery, haberdashery, millinery, uniforms, accoutrements, boots and shoes.	1		1		1	1		
II.—Coal and Coke carried for the Public and Foreign Railways.	1,179		813		1,179	813	366	
III.—Cotton—								
1. Raw		17		15	17	15	2	
2. Manufactured—								
(a) Twist and yarn, European	40		42		40	42		2
(b) Ditto, Indian								
(c) Piece-goods, European	107	1	111		108	111		3
(d) Ditto, Indian	1		1		1	1		
(e) Others								
IV.—Chemicals, excepting saltpetre								
V.—Drugs—								
1. Intoxicating, other than opium	1				1		1	
2. Non-intoxicating—								
(a) Medical preparations	2		1		2	1	1	
(b) Others			1			1		1
VI.—Dyes and Tans—								
1. Indigo								
2. Myrabolams								
3. Cutch			1			1		1
4. Turmeric	7	91	10	49	98	59	39	
5. Alizarine and Aniline Dyes								
6. Al (Morinda Citrifolia)								
7. Tanning barks								
8. Others								
VII.—Fodder—								
1. Oilcake	100	15	21	8	115	29	86	
2. Hay, straw and grass								
VIII.—Fruits and vegetables, fresh	53	208	30	416	261	446		185
IX.—Grain and Pulse—								
1. Wheat	48	64			112		113	
2. Rice in the husk	52	37	51	230	83	281		198
3. Do. not in the husk	39	58	56	80	97	86	11	
4. Jawar and bajra								
5. Gram and pulse			34	48		82		83
6. Wheat flour	12		18		12	13		1
7. Others	1		1	5	1	6		5
X.—Hides and Skins—								
1. Hides of cattle—								
(a) Dressed or tanned	1	41		30	42	30	12	
(b) Raw								
2. Skins of sheep and other animals—								
(a) Dressed or tanned		8		8	8	8		
(b) Raw								
XI.—Horns		17		29	17	29		12
XII.—Hemp (Indian) and other fibres, excluding jute.								
XIII.—Jute—								
1. Raw	106	760	8	282	760	285	484	
2. Gunny-bags and cloth		3	20	8	109	28	81	
XIV.—Lac								
XV.—Leather—								
1. Unwrought								
2. Wrought, excepting boots and shoes.								
XVI.—Liquors—								
1. Ale and beer								
2. Spirit of all kinds, including country spirit.								
3. Wine	3		3		3	3		
4. All other sorts, including toddy and fermented liquor, other than ale and beer.								
XVII.—Metals—								
1. Copper, unwrought								
2. Brass, ditto		1			1		1	
3. Copper, wrought								
4. Brass, ditto	91	7	4	3	98	7	91	
5. Iron and steel—								
(a) Cast								
(b) Unwrought			43			43		43
(c) Wrought	48	1	8		49	8	41	
(d) Manufactured								
6. Others	9	21	15	11	30	20	4	
XVIII.—Oils—								
1. Kerosine	372	5	227	4	377	231	146	
2. Castor								
3. Cocoanut	15		19		15	19		4
4. Mustard and rape	70		49	1	70	50	16	
5. Others	5				5		5	
XIX.—Oilseeds—								
1. Linseed		28		25	28	25	63	
2. Rape and mustard	307	44	317	1	251	318		67
3. Til or jinjili		105	1	204	105	205		100
4. Poppy								
5. Earthnuts								
6. Castor								
7. Others				29		29		29
XX.—Opium								
XXI.—Paper and Pasteboard	13		21		13	21		8
XXII.—Provisions—								
1. Ghee	2		2		2	2		
2. Dried fruits and nuts	7	28	1	2	35	2	14	2
3. Others				20		21		

ARTICLES.	1902.		1901.		TOTAL.		Increase.	Decrease.
	Up.	Down.	Up.	Down.	1902.	1901.		
	Tons.	Tons.	Tons.	Tons.	Tons.	Tons.	Tons.	Tons.
XXIII.—Railway plant and rolling-stock carried for the Public and Foreign Railways—								
1. Locomotives, engines, and tenders, and parts thereof.	.....	.....	.....	.....	.....	.....	.....	.....
2. Carriages and trucks, and parts thereof.	.....	.....	.....	.....	.....	.....	.....	.....
3. Materials—								
(a) Steel rails and fish-plates	.....	.....	.....	.....	.....	.....	.....	.....
(b) Sleepers and keys of steel and cast-iron.	.....	.....	.....	.....	.....	.....	.....	.....
(c) Other sorts	.....	.....	.....	.....	.....	.....	.....	.....
XXIV.—Salt	410	.....	335	.....	410	335	75	.....
XXV.—Saltpetre and other saline substances—								
1. Saltpetre	29	.....	.....	.....	29	.....	29	..
2. Other saline substances	9	...	7	.....	9	7	2	.....
XXVI.—Silk—								
1. Raw—								
(a) Foreign	.....	.....	.....	.....	.....	.....	.....	.....
(b) Indian	.....	.....	.....	.....	.....	.....	.....	.....
2. Silk piece-goods—								
(a) Foreign	.....	.....	.....	.....	.....	.....	.....	.....
(b) Indian	.....	.....	.....	.....	.....	.....	.....	.....
XXVII.—Spices—								
1. Betelnuts	2	92	... ..	324	94	324	.....	230
2. Pepper	.....	.....	.....	.....	.....	.....	.....	.....
3. Ginger	... .	... ..	.....	.....	... ..	.....	.....	.....
4. Chillies	9	.....	1	17	9	18	.....	9
5. Cardamoms	.....	.....	.... .	.....	.....	.....	.....	.....
6. Others	3	42	3	45	45	48	...	3
XXVIII.—Stone and lime	341	....	306	.....	341	306	35	.....
XXIX.—Sugar—								
1. Refined or crystallized, including sugarcandy.	29	.....	15	.....	29	15	14	.....
2. Unrefined—								
(a) Sugar	25	121	10	604	146	614	.. ...	468
(b) Gur, rab, molasses, jaggery, and other saccharine produce.	20	32	10	21	52	31	21	.....
XXX.—Tea—								
1. Foreign	.....	.....	.....	.....	.....	... ..	.....	.....
2. Indian	... .	.....	.... .	.....	.....	.....	.....	.....
XXXI.—Tobacco—								
1. Unmanufactured	115	29	177	16	144	193	.....	49
2. Manufactured—								
(a) Cigars	.....	.....	.....	.....	.....	.....	.....	.....
(b) Other sorts	.....	.....	.....	.....	.....	.....	.....	.....
XXXII.—Wood—								
1. Timber, unwrought	92	18	94	3	110	97	13	.....
2. Manufactures	15	7	11	... ..	22	11	11	.. ...
XXXIII.—Wool—								
1. Raw	.....	.....	.....	.....	.....	.....	... ..	.....
2. Manufactured—								
(a) Carpets and rugs	.....	.....	.....	.....	.....	.....	.....	.....
(b) Piece-goods, European ...	.....	.....	.....	.....	.....	.....	.....	.....
(c) Ditto, Indian ...	.....	.....	.....	.....	.....	.....	.....	.....
(d) Other sorts of manufactures.	.....	.....	.....	.....	.....	.....	.....	.....
XXXIV.—All other articles of merchandise ...	224	178	301	121	402	422	.....	20
Total ...	3,921	2,146	3,190	2,690	6,067	5,880	1,786	1,608

T. SIDDLE,

Chief Auditor and Accountant.

CALCUTTA, *the 28th August 1902.*

SEGOWLIE-RAKSAUL BRANCH RAILWAY.

Statement of Goods Traffic for the month of April 1902 compared with the corresponding period in 1901.

Description of Goods.	1901.		1902.		Increase.		Decrease.		Explanation of fluctuations by the Traffic Manager.
	Mds.	Rs.	Mds.	Rs.	Mds.	Rs.	Mds.	Rs.	
I.—Apparel, including drapery, haberdashery, millinery, uniforms, accoutrements, boots and shoes.	3	1	7	1	4	...	...	...	
II.—Coal and Coke carried for the Public and Foreign railways.	456	5	884	12	428	7	...	...	
III.—Cotton—									
1. Raw	81	5	709	57	628	52	...	...	
2. Manufactured—									
(a) (b) Twist and yarn { European / Indian ...	1,569	81	883	46	...	...	686	35	
(c) (d) Piece-goods ... { European / Indian ...	767	48	369	27	...	...	398	21	
	625	43	733	58	108	15	...	...	
(e) Others	...	...	8	1	8	1	...	...	
IV.—Chemicals, excepting saltpetre	...	...	...	...	...	...	...	...	
V.—Drugs—									
1. Intoxicating, other than opium.	...	...	...	...	...	...	...	...	
2. Non-intoxicating—									
(a) Medicinal preparations	...	...	...	...	...	...	...	...	
(b) Others	295	9	24	1	...	...	271	8	
VI.—Dyes and Tans—									
1. Al (Morinda citrifolia) ...	... 7	... 2	...	...	...	...	... 7	... 2	
2. Alizarine and aniline dyes	1,869	60	2,450	90	581	30	...	...	
3. Cutch	...	...	...	...	...	...	...	...	
4. Indigo	...	...	...	...	...	...	...	...	
5. Myrabolams	...	...	...	...	...	...	...	...	
6. Tanning barks	...	...	...	...	...	...	...	...	
7. Turmeric	...	...	...	...	...	...	...	...	
8. Others	...	...	...	...	...	...	...	...	
VII.—Fodder—									
1. Oilcake	...	...	...	...	...	...	...	...	
2. Hay, straw and grass ...	...	...	...	...	...	...	...	...	
VIII.—Fruits and vegetables, fresh ...	111	2	...	...	...	...	111	2	
IX.—Grain and Pulse—									
1. Grain and pulse	247	3	982	24	735	21	...	...	
2. Jawar and bajra	...	...	...	...	...	...	...	...	
3. 4. Rice { in the husk / not in the husk ...	4,502	102	7,640	169	3,287	67	...	...	
	12,060	185	5,909	77	...	...	6,151	108	
5. Wheat	...	...	...	...	...	...	...	...	
6. Wheat-flour	101	11	50	1	...	...	141	10	
7. Makai	...	...	247	6	247	6	...	...	
8. Others	3,609	98	287	7	...	...	3,412	91	
X.—Hides and Skins—									
1. Hides of cattle—									
(a) Dressed or tanned ...	...	...	...	...	...	...	...	...	
(b) Raw	111	2	305	12	194	10	...	...	
2. Skins of sheep and other animals—									
(a) Dressed or tanned ...	...	...	...	...	...	...	...	...	
(b) Raw	54	1	...	...	...	...	54	1	
XI.—Horns	...	...	...	...	...	...	...	...	
XII.—Hemp (Indian) and other fibres, excluding jute.	...	...	...	...	...	...	...	...	
XIII.—Jute—									
1. Raw	...	...	...	...	...	...	...	...	
2. Gunny-bags and cloth ...	698	26	518	18	...	...	180	8	
XIV.—Lac	2	1	...	...	...	...	2	1	
XV.—Leather—									
1. Unwrought	... 1	... 1	...	...	...	...	... 1	... 1	
2. Wrought, excepting boots and shoes.			...	...	...	...			
XVI.—Liquors—									
1. Ale and Beer	... 4	... 1	...	...	...	...	... 4	... 1	
2. Spirits of all kinds, including country spirits.			...	...	...	...			
3. Wine	... 4	... 1	...	...	...	...	... 4	...	
4. All other sorts, including toddy and fermented liquor, other than ale and beer.			...	...	...	...			
XVII.—Metals—									
1. Brass, unwrought	... 118	... 9	24	1	24	1	... 14	... 3	
2. ,, wrought			104	6	...	..			
3. Copper, unwrought ...	...	...	...	...	...	...	...	...	
4. ,, wrought	...	...	47	2	47	2	...	...	
5. Iron and steel—									
(a) Cast	300	20	400	22	100	2	...	...	
(b) Unwrought	...	...	..	...	...	...	...	...	
(c) Wrought	3,825	106	238	9	...	...	3,587	97	Less demand in Nepal.
(d) Manufactures	518	17	123	26	...	9	395	...	
6. Others	30	2	61	4	31	2	...	...	
XVIII.—Oils—									
1. Kerosine	653	10	1,903	44	1,300	34	...	...	
2. Castor	...	...	28	1	28	1	...	...	
3. Cocoanut	...	...	..	...	...	...	...	...	
4. Mustard and rape	... 7	... 1	...	...	...	...	... 7	... 1	
5. Others			..	...	...	...			

Description of Goods.	1901.		1902.		Increase.		Decrease.		Explanation of fluctuations by the Traffic Manager.
	Mds.	Rs.	Mds.	Rs.	Mds.	Rs.	Mds.	Rs.	
XIX.—Oilseeds—									
1. Castor	...	...	...	...	...	...	...	...	
2. Earthnuts	...	...	...	...	...	...	...	...	
3. Linseed	7,605	226	10,723	252	3,117	26	...	...	Demand.
4. Poppy	...	...	...	...	...	...	...	...	
5. Rape and mustard	...	...	277	8	277	8	...	...	
6. Til or Jujili	...	...	...	...	...	...	...	...	
7. Others	904	16	37	1	...	...	867	15	
XX.—Opium	...	...	...	...	...	...	...	...	
XXI.—Paper and pasteboard	9	1	...	...	...	...	9	1	
XXII.—Provisions—									
1. Dried fruits and nuts	...	...	202	24	202	24	...	...	
2. Ghee	14	1	18	1	4	...	...	...	
3. Others	91	5	40	2	...	...	51	3	
XXIII.—Railway plant and rolling-stock carried for the public and foreign railways—									
1. Locomotive engines and tenders and parts thereof	...	...	...	...	...	...	...	...	
2. Carriages and trucks and parts thereof.	...	...	...	...	...	...	...	...	
3. Materials—									
(a) Steel rails and fish-plates.	...	...	...	...	...	...	...	...	
(b) Sleepers and keys of steel and cast-iron.	...	...	...	...	...	...	...	...	
(c) Others	...	...	...	...	...	...	...	...	
XXIV.—Salt	2,424	59	4,010	77	2,486	18	...	...	Owing to demand in Nepal.
XXV.—Saltpetre and other saline substances—									
1. Saltpetre	...	...	...	...	...	...	...	...	
2. Other saline substances	...	...	8	1	8	1	...	...	
XXVI.—Silk—									
1. Raw—									
(a) Foreign	...	...	...	...	...	...	...	...	
(b) Indian	...	...	...	...	...	...	...	...	
2. Piece-goods—									
(a) Foreign	...	...	...	...	...	...	...	...	
(b) Indian	...	...	...	...	...	...	...	...	
XXVII.—Spices—									
1. Betelnuts	188	13	44	3	...	...	144	11	
2. Cardamoms	...	...	...	...	...	...	...	...	
3. Chillies	58	1	176	5	118	4	...	...	
4. Ginger	...	...	...	...	...	...	...	...	
5. Pepper	...	...	19	1	19	1	...	...	
6. Others	150	6	209	9	59	3	...	...	
XXVIII.—Stone and lime	...	...	5	1	5	1	...	...	
XXIX.—Sugar—									
1. Refined or crystallized, including sugar-candy.	297	10	432	12	135	2	...	...	
2. Unrefined—									
(a) Sugar	61	2	53	1	...	...	8	1	
(b) Gur, rab, jaggree, molasses, and other saccharine produce.	...	...	...	...	...	...	...	...	
XXX.—Tea—									
1. Foreign	...	...	...	...	...	...	...	...	
2. Indian	...	...	...	...	...	...	...	...	
XXXI.—Tobacco—									
1. Unmanufactured	1,149	52	450	25	...	...	699	27	
2. Manufactured—									
(a) Cigars	...	...	...	...	...	...	...	...	
(b) Other sorts	...	...	...	...	...	...	...	...	
XXXII.—Wood—									
1. Timber, unwrought	326	5	345	5	19	...	...	...	
2. Logs	4,901	74	4,243	67	...	...	658	7	
3. Poles	...	...	...	...	...	...	...	...	
4. Manufactures	7	1	16	2	9	1	...	...	
XXXIII.—Wool—									
1. Raw	87	8	...	...	...	...	87	8	
2. Manufactured—									
(a) Carpets and rugs	...	...	...	...	...	...	...	...	
(b) (c) Piece-goods { European / Indian	36	2	57	3	21	1	...	...	
(d) Other sorts of manufactures.	...	...	...	...	...	...	...	...	
XXXIV.—All other articles of merchandise—									
1. Indigo-seed	...	...	...	...	...	...	...	...	
2. Firewood	...	...	...	...	...	...	...	...	
3. Others not specified above	1,291	77	1,113	121	...	44	178	...	
Total	52,165	1,418	48,537	1,349	14,338	395	17,966	464	

J. Lightfoot,
Chief Auditor.

Gorakhpur, *the 30th August 1902*

Weekly Return of Traffic Receipts on Indian Railways

EAST INDIAN RAILWAY.

Approximate Return of Traffic for week ended 16th August 1902 on 1,913·49 miles open.

	Coaching Traffic.		Merchandise and Mineral Traffic.		Other earnings (estimated).	Total earnings.	Traffic Train-miles run.		
	Number of passengers.	Coaching receipts.	Weight carried.	Receipts.			Coaching.	Merchandise.	Total.
		Rs. A. P.	Mds. s.	Rs. A. P.	Rs. A. P.	Rs. A. P.			
	(a)	(a)		(b)					
Total traffic for the week ...	357,679	3,46,045 13 0	41,45,065 0	7,10,908 5 0	19,639 0 0	10,76,593 2 0	103,953	137,635	236,588
Or per mile of railway ...	... ..	180 13 6	.....	371 8 5	10 4 3	562 16 2	.....	.....	.....
For previous 5½ weeks of half-year.	2,212,897*	21,17,906 2 0*	2,56,23,195 30†	43,98,737 14 0†	1,33,972 0 0‡	66,50,316 0 0	624,887§	996,336§	1,621,223
Total for 6½ weeks ...	2,580,576	24,63,951 15 0	2,97,68,280 30	51,09,646 3 0	1,53,611 0 0	77,26,909 2 0	733,920	1,153,971	1,887,791
Comparison.									
Total for corresponding week of previous year.	398,697§	4,41,653 2 10	51,37,112 0	8,18,701 14 7	21,789 7 11	13,82,144 9 4	110,408§	191,080	301,468§
Per mile of railway corresponding week of previous year.	.....	240 4 7	.....	445 6 9	11 15 8	697 9 0	.....	.....	.....
Total for corresponding 6½ weeks of previous year.	2,773,623§	29,55,542 15 9	3,66,59,560 10	65,28,359 3 0	1,36,039 4 2	96,19,941 6 11	753,781	1,440,185§	2,193,966§

(*a*) The decrease is due to the running of several extra troop trains from Kidderpore Docks and of several extra passenger special trains for "Rajgir, &c., Melas" in the corresponding period of 1901.
(*b*) The decrease is chiefly in coal.
* Added No. of passengers 11,998 and deducted Rs. 11,784 and ,, 18,177 } On account of difference between the approximate and audited figures for the first 12 days of July 1902.
† Do. Mds. 2,37,501 ,, 6,396 }
‡ Deducted
§ Audited figures up to 12th July 1902.

1902. *Abstract of progressive weekly returns of all earnings for 1902 in comparison with 1901.*

Open mileage.	Period.	Coaching Traffic.		Merchandise and Mineral Traffic.		Other earnings.	Total.	Per mile of Railway.	Train mileage.	
		No. of Passengers.	Rs.	Mds.	Rs.	Rs.	Rs.	Rs.	No.	Rate. Rs. A. P.
*1,913·49	13 days of July ...	716,603	6,65,787	86,38,982	14,63,289	31,011	21,60,087	1,129	509,575	4 3 10
1,913·49	Week ended 19th July ...	439,028	3,82,383	45,08,891	7,77,313	27,287	11,86,983	620	281,380	4 3 6
1,913·49	,, ,, 26th ,, ...	369,578	3,75,190	42,41,383	7,30,928	29,483	11,35,610	593	273,980	4 2 4
1,913·49	,, ,, 2nd August	346,160	3,47,770	41,34,650	7,14,228	22,745	10,84,743	567	284,300	3 13 1
1,913·49	,, ,, 9th ,, ...	351,528	3,48,767	40,99,290	7,13,080	22,546	10,82,393	566	272,008	3 15 8
1,913·49	,, ,, 16th ,, ...	357,679	3,46,046	41,45,065	7,10,908	19,639	10,76,593	563	256,568	4 0 7
	Totals up to date ...	2,580,576	24,63,952	2,97,68,281	51,09,646	1,53,311	77,26,909	601	1,887,791	4 1 6

Abstract of progressive weekly returns of all earnings for 1902 in comparison with 1901—concluded. *1901*

		No. of Passengers.	Rs.	Mds.	Rs.	Rs.	Rs.	Rs.	No.	Rate. Rs. A. P.
1,837·46	13 days of July ..	707,205	7,62,573	1,04,38,391	18,93,791	34,036	26,89,400	1,464	586,902	4 9 4
1,837·79	Week ended 20th July ..	385,819	3,75,644	54,41,767	9,82,243	19,453	13,77,344	749	325,917	4 3 7
1,838·04	,, ,, 27th ,, ...	436,037	4,34,998	50,18,440	9,75,870	20,231	14,31,099	779	325,316	4 6 5
1,838·04	,, ,, 3rd August	427,584	4,66,766	53,96,540	9,67,492	19,982	14,74,240	802	336,217	4 6 4
1,838·04	,, ,, 10th ,, ...	418,883	4,53,909	53,23,299	8,91,256	20,579	13,65,744	743	319,146	4 4 6
1,838·04	,, ,, 17th ,, ...	398,098	4,41,663	51,37,112	8,18,702	21,789	13,82,144	698	301,468	4 4 1
	Totals up to date ...	2,773,624	29,55,543	3,66,59,569	65,28,339	1,36,039	96,19,941	763	2,193,966	4 6 2

* Audited figures.

TARKESSUR BRANCH RAILWAY.

Approximate Return of Traffic for week ended 16th August 1902 on 22·23 miles open.

	Coaching Traffic.		Merchandise and Mineral Traffic.		Other earnings (estimated).	Total earnings.	Traffic Train-miles run.		
	No. of passengers.	Coaching receipts.	Weight carried.	Receipts.			Coaching.	Merchandise.	Total.
		Rs. A. P.	Mds. s.	Rs. A. P.	Rs. A. P.	Rs. A. P.			
Total traffic for the week ...	18,606	4,790 12 0	16,245 0	304 0 0	5 0 0	5,099 12 0	1,046	142	1,188
Or per mile of railway ...	... .	215 8 1	.....	13 10 10	0 3 7	229 6 6	.....	.....	... ..
For previous 5½ weeks of half-year	128,956*	30,580 2 0*	1,30,171 20†	3,631-12 0†	39 0 0‡	34,250 14 0	6,157§	663§	6,820
Total for 6½ weeks ...	147,562	35,370 14 0	1,46,416 20	3,935 12 0	44 0 0	39,350 10 0	7,203	805	8,008
Comparison.									
Total for corresponding week of previous year.	19,153§	4,434 1 7	7,207 20	275 10 0	7 13 3	4,717 8 10	1,114	74	1,188
Per mile of railway corresponding week of previous year.	.....	199 7 5	.....	12 6 4	0 5 8	212 3 5	.....	.....	.....
Total for corresponding 6½ weeks of previous year.	156,419§	35,584 1 8	53,293 0	2,185 3 0	54 6 0	37,823 10 8	7,759	469	8,228

* Added No. of passengers 2,510 and Rs. 324 } on account of difference between the approximate and audited figures for the first 12 days of
† Do. Mds. 56,306 and ,, 921 } July 1902.
‡ Deducted ,, 3 }
§ Audited figures up to 12th July 1902.

TARKESSUR BRANCH RAILWAY—*concluded.*

1902. *Abstract of progressive weekly returns of all earnings for 1902 in comparison with 1901.*

Open mileage.	Period.	Coaching Traffic.		Merchandise and Mineral Traffic.		Other earnings.	Total.	Per mile of railway.	Train mileage.	
		No. of passengers.	Rs.	Mds.	Rs.	Rs.	Rs.	Rs.	No.	Rate. Rs. A. P.
*22·23	12 days of July ...	40,661	10,019	72,607	1,575	10	11,604	522	2,068	5 9 9
22·23	Week ended 19th July ...	39,831	6,624	11,762	414	7	7,045	317	1,188	5 14 11
22·23	,, ,, 26th ,, ...	31,627	5,128	13,638	371	8	5,502	247	1,188	4 10 1
22·23	,, ,, 2nd August	17,793	4,097	15,096	363	7	4,467	201	1,188	3 12 2
22·23	,, ,, 9th ,, ...	19,044	4,717	17,069	909	7	5,633	253	1,188	4 11 10
22·23	,, ,, 16th ,, ...	18,606	4,791	16,245	304	5	5,100	229	1,188	4 4 8
	Totals up to date ...	147,562	35,371	1,46,417	3,936	44	39,351	264	8,008	4 14 7

Abstract of progressive weekly returns of all earnings for 1902 in comparison with 1901—concluded. 1901.

		No. of passengers.	Rs.	Mds.	Rs.	Rs.	Rs.	Rs.	No.	Rate. Rs. A. P.
22·23	13 days of July ...	41,388	9,910	20,302	786	18	10,714	482	2,344	4 13 5
22·23	Week ended 20th July ...	19,522	4,533	5,910	267	8	4,808	216	1,188	4 0 9
22·23	,, ,, 27th ,,	30,403	6,411	7,351	310	6	727	303	1,232	5 7 4
22·23	,, ,, 3rd August	24,864	5,489	5,580	234	5	5,728	258	1,188	4 13 2
22·23	,, ,, 10th ,, ...	21,089	4,807	6,937	313	10	5,129	231	1,188	4 5 1
22·23	,, ,, 17th ,, ...	19,154	4,434	7,207	276	8	4,718	212	1,188	3 15 7
	Totals up to date ...	156,420	35,584	53,293	2,185	55	37,824	248	8,228	4 9 7

* Audited figures.

DELHI-UMBALLA-KALKA RAILWAY.

Approximate Return of Traffic for week ended 16th August 1902, on 162·24 miles open.

	Coaching Traffic.		Merchandise and Mineral Traffic.		Other earnings (estimated).	Total earnings.	Traffic Train-miles run.		
	No. of Passengers.	Coaching Receipts.	Weight carried.	Receipts.			Coaching.	Merchandise.	Total.
		Rs. A. P.	Mds. s.	Rs. A. P.	Rs. A. P.	Rs. A. P.			
Total traffic for the week	20,646	17,386 12 0	39,974 30	7,352 7 0	43 0 0	24,782 3 0	8,141	4,701	12,932
Or per mile of railway	....	107 2 8	...	45 5 1	0 4 3	152 12 0	...	...	...
For previous 5½ weeks of half-year	131,647*	1,07,321 8 0*	5,11,368 20†	54,264 0 0†	280 0 0‡	1,61,865 8 0	48,452§	26,318§	74,670
Total for 6½ weeks ...	152,293	1,24,708 4 0	5,71,343 10	61,616 7 0	323 0 0	1,86,647 11 0	56,593	31,009	87,602
COMPARISON.									
Total for corresponding week of previous year.	19,936½	18,073 6 11	1,02,421 30	6,466 0 0	47 9 3	24,587 0 2	7,979	4,103½	12,103½
Per mile of railway corresponding week of previous year.	...	111 6 5	...	39 13 8	0 4 8	151 8 9	...	...	...
Total for corresponding 6½ weeks of previous year.	150,541½	1,27,034 7 11	8,85,084 20	51,359 5 7	315 11 6	2,09,309 0 0	55,502½	24,714	80,216½

* Added No. of passengers 2,748 and Rs. 3,203 } On account of difference between the approximate and audited figures for the first 12 days of July 1902.
† Do. maunds 2,338 and ,, 1,851 }
‡ Do. ,, 9
§ Audited figures up to 12th July 1902.

1902. *Abstract of progressive weekly returns of all earnings for 1902 in comparison with 1901.*

Open mileage.	Period.	Coaching Traffic.		Merchandise and Mineral Traffic.		Other earnings.	Total.	Per mile of railway.	Train mileage.	
		Number of Passengers.	Rs.	Mds.	Rs.	Rs.	Rs.	Rs.	No.	Rate. Rs. A. P.
*162·24	12 days of July ...	40,898	32,091	1,49,494	19,647	93	51,831	319	22,785	2 4 5
162·24	Week ended 19th ,, ...	22,810	18,459	97,123	8,972	54	27,485	169	12,560	2 3 0
162·24	,, ,, 26th ,, ...	26,020	19,806	93,854	7,900	47	27,753	171	12,038	2 2 4
162·24	,, ,, 2nd Aug. ...	20,064	19,074	94,678	8,090	41	27,211	167	13,123	2 1 3
162·24	,, ,, 9th ,, ...	21,855	17,892	77,219	9,649	45	27,586	170	13,370	2 1 3
162·24	,, ,, 16th ,, ...	20,646	17,386	59,975	7,353	43	24,782	153	12,932	1 14 8
	Totals up to date ...	152,293	1,24,708	5,71,343	61,617	323	1,86,648	171	87,602	2 2 1

Abstract of progressive weekly returns of all earnings for 1902 in comparison with 1901—concluded. 1901.

		Number of Passengers.	Rs.	Mds.	Rs.	Rs.	Rs.	Rs.	No.	Rate. Rs. A. P.
162·24	13 days of July ...	41,385	31,193	3,15,809	30,744	82	62,018	382	21,945	2 13 3
162·24	Week ended 20th ,, ...	23,979	17,801	88,131	10,705	49	28,555	176	11,711	2 7 0
162·24	,, ,, 27th ,, ...	32,024	18,927	85,377	10,092	43	29,062	179	11,234	2 9 5
162·24	,, ,, 3rd Aug. ...	21,032	22,416	94,502	11,813	60	34,288	211	11,363	3 0 1
162·24	,, ,, 10th ,, ...	21,587	19,225	1,98,314	11,540	34	30,799	190	11,660	2 9 7
162·24	,, ,, 17th ,, ...	19,937	18,073	1,02,422	6,466	48	24,587	152	12,104	2 0 6
	Totals up to date ...	150,542	1,27,634	8,85,085	81,359	316	2,09,309	188	80,217	2 9 9

* Audited figures.

SOUTH BEHAR RAILWAY.

Approximate Return of Traffic for week ended 16th August 1902, on 78·76 miles open.

	Coaching Traffic.		Merchandise and Mineral Traffic.		Other earnings (estimated).	Total earnings.	Traffic Train-miles run.		
	Number of passengers.	Coaching receipts.	Weight carried.	Receipts.			Coaching.	Merchandise.	Total.
		Rs. A. P.	Mds. s.	Rs. A. P.	Rs. A. P.	Rs. A. P.			
Total traffic for the week	(a) 9,738	(a) 5,549 9 0	36,105 0	2,044 8 0	27 0 0	7,631 1 0	1,979	856	2,835
Or per mile of railway ...	... ..	70 7 5	..	25 15 4	0 5 6	96 12 3	..	...	...
For previous 5½ weeks of half-year	67,023*	36,682 8 0*	2,21,123 20†	12,629 3 0†	137 0 0‡	49,448 11 0	11,060§	5,006§	16,065
Total for 6½ weeks ...	76,761	42,232 1 0	2,57,228 20	14,673 11 0	164 0 0	57,079 12 0	13,039	5,861	18,900
Comparison.									
Total for corresponding week of previous year	23,231	11,727 14 8	38,833 0	2,740 1 0	20 15 0	14,488 14 8	2,135	1,171½	3,307½
Per mile of railway corresponding week of previous year	...	148 14 6	...	34 12 8	0 4 3	183 15 5	...	...	...
Total for corresponding 6½ weeks of previous year	140,706	63,238 14 11	3,26,057 20	21,677 11 0	119 3 6	85,035 13 5	14,081	8,727½	22,758½

(a) The decrease is due to the "Rajgir" Mela in the corresponding period of 1901.
* Added No. of passengers 3,494 and Rs. 2,434
† Do. maunds 5,285 and ,, 290 } On account of difference between the approximate and audited figures for the first 12 days of July 1902.
‡ Do. ,, 4
§ Audited figures up to 12th July 1902.

1902. *Abstract of progressive weekly returns of all earnings for 1902 in comparison with 1901.*

Open mileage.	Period.	Coaching Traffic.		Merchandise and Mineral Traffic.		Other earnings.	Total.	Per mile of railway.	Train mileage.	
		Number of passengers.	Rs.	Mds.	Rs.	Rs.	Rs.	Rs.	No.	Rate. Rs. A. P.
*78·76	12 days of July ...	23,554	12,210	70,807	4,678	47	16,928	214	4,901	3 6 3
78·76	Week ended 10th ,, ...	11,624	6,637	38,848	1,771	18	8,426	107	2,599	3 3 11
78·76	,, ,, 26th ,, ...	11,195	6,518	46,118	2,251	21	8,790	112	2,756	3 3 0
78·76	,, ,, 2nd Aug. ...	10,414	5,543	33,613	2,183	28	7,754	98	2,914	2 10 7
78·76	,, ,, 9th ,, ...	10,236	5,775	31,648	1,846	30	7,651	97	2,835	2 11 3
78·76	,, ,, 16th ,, ...	9,738	5,549	36,105	2,045	27	7,621	97	2,835	2 11 0
	Totals up to date ...	76,761	42,232	2,57,229	14,674	164	57,070	108	18,900	3 0 4

Abstract of progressive weekly returns of all earnings for 1902 in comparison with 1901—concluded. *1901.*

		No. of Passengers.	Rs.	Mds.	Rs.	Rs.	Rs.	Rs.	No.	Rate. Rs. A. P.
78·76	13 days of July ...	20,350	10,058	67,747	6,177	24	16,259	206	6,143	2 10 4
78·76	Week ended 20th ,, ...	12,298	5,865	50,236	3,121	8	8,994	114	3,307	2 11 6
78·76	,, ,, 27th ,, ...	10,907	6,083	49,002	2,883	18	10,984	130	3,308	3 5 2
78·76	,, ,, 3rd Aug. ...	32,988	13,656	51,096	3,215	14	16,885	214	3,388	4 15 9
78·76	,, ,, 10th ,, ...	31,942	13,849	49,144	3,542	34	17,425	221	3,307	5 4 3
78·76	,, ,, 17th ,, ...	23,321	11,728	38,833	2,740	21	14,489	184	3,308	4 6 1
	Totals up to date ...	140,706	65,239	3,26,058	21,678	119	85,036	157	22,759	3 11 9

* Audited figures.

BENGAL CENTRAL RAILWAY COMPANY, LIMITED.

Approximate Return of Traffic and Mileage for the week ended 16th August 1902 on 139 miles open.

	Coaching Traffic.		Merchandise and Mineral Traffic.		Other earnings.	Total earnings.	Traffic Train-miles run.		
	Number of passengers.	Coaching receipts.	Weight carried.	Receipts.			Coaching.	Merchandise.	Total.
		Rs. A. P.	Mds. s.	Rs. A. P.	Rs. A. P.	Rs. A. P.			
Total traffic for the week ...	31,063	13,201 0 0	90,040 0	11,000 0 0	138 0 0	24,429 0 0	3,354	3,452	6,806
Or per mile of railway	239	102 0 0*	648 0	80 0 0	1 0 0	183 0 0	.....	...	.....
For previous 6 weeks of half-year	208,894	83,497 0 0	2,60,720 0	25,553 0 0	613 0 0	1,09,663 0 0	19,156	15,887	35,043
Total for 7 weeks ...	239,957	96,698 0 0	3,50,760 0	36,543 0 0	751 0 0	1,34,092 0 0	22,510	19,339	41,849
Comparison.									
Total for corresponding week of previous year ...	31,065	13,673 0 0	1,71,123 0	21,273 0 0	46 0 0	33,992 0 0	3,154	6,849	10,003
Per mile of railway corresponding week of previous year ...	239	97 0 0	1,231 0	153 0 0	.....	250 0 0	.....	.....	.....
Total to corresponding date of previous year	254,218	92,363 0 0	6,09,616 0	64,831 0 0	26,899 0 0	1,84,093 0 0	23,071	25,743	47,814

* Coaching traffic calculated on 130 miles only.

BENGAL AND NORTH-WESTERN RAILWAY.

Approximate Return of Traffic for the week ending 16th August 1902 on 1,262 miles open.

	Coaching Traffic.		Merchandise and Mineral Traffic		Other earnings (estimated), including steam-boat.	Total earnings.	Traffic Train Miles run.		
	No. of passengers.	Receipts.	Weight carried.	Receipts			Coaching.	Merchandise.	Total.
		Rs	Mds.	Rs.	Rs	Rs.			
Total traffic for the week on 1,262 miles open	218,330	(a)61,650	4,47,670	54,150	12,070	(a)1,47,870	40,640	(b) 20,982	70,622
Or per mile of railway	173·00	64·70	354·73	42·91	9 56	117·17	...	...	...
For previous 5½ weeks of half-year	1,076,000	4,25,320	33,39,970	3,66,780	91,280	8,83,380	236,052	177,125	413,177
Total for 6½ weeks ..	1,294,330	5,06,970	37,87,640	4,20,930	1,03,350	10,31,250	276,692	207,107	483,799
Comparison									
Total for corresponding week of previous year on 1,251 miles open	179,019	64,325	4 22,334	50,147	14,519	1,28,991	35,073	(c)27,946	63,019
Per mile of railway corresponding week of previous year ...	143·10	51 34	337·60	40·09	11·60	103·03	..	...	.
Total to corresponding date of previous year	1,26 ,234	4,67,853	40,60,657	4,60,436	1,15,956	10,44,045	234,357	202,562	436,919

Note.—Communication interrupted by floods as under :—
Miles 16·50, Nirmali to Raghupur, from August 12th to 14th.
„ 15 50, Raghupur to Khanwa Ghat, „ „ 13th.
„ 8 25, Rajpatti to Sitamarhi, „ „ 12th to 14th.
„ 18·00, Sitamarhi to Bairagnia, „ „ 12th.

(a) Increase due to *mela* at Ajodhya.
(b) Includes 6,912 miles of ballast trains run on open line.
(c) „ 7,608 „ „ „

SEGOWLIE-RAKSAUL BRANCH RAILWAY.

(Worked by the B. & N.-W. Railway.)

Approximate Return of Traffic for the week ending 16th August 1902 on 18 miles open

	Coaching Traffic.		Merchandise and Mineral Traffic.		Other earnings (estimated).	Total earnings.	Traffic Train-miles run.		
	Passengers carried.	Receipts.	Weight carried.	Receipts			Coaching.	Merchandise.	Total.
	No.	Rs.	Mds.	Rs.	Rs.	Rs.			
Total traffic for the week on 18 miles open	1,251	135	3,681	101	10	246	243	51	294
Or per mile of railway	69·50	7·50	204·50	5·61	0·56	13·67	...	...	.
For previous 5½ weeks of half-year	8,611	1,191	51,552	1,176	33	2,400	2,243	637	2,880
Total for 6½ weeks ..	9,862	1,326	55,233	1,277	43	2,646	2,486	688	3,174
Comparison.									
Total for corresponding week of previous year on 18 miles open	3,132	418	5,267	160	8	586	438	66	504
Per mile of railway corresponding week of previous year ...	174 00	23·19	292 61	8·99	0·44	32·55	...	...	.
Total to corresponding date of previous year	15,720	2,331	50,840	1,493	80	3,904	2,941	551	3,492

Note.—The line closed for all descriptions of traffic from 15th August 1902 owing to floods.

ASSAM-BENGAL RAILWAY.

Approximate Return of Traffic for the week ended 16th August 1902 on 558 miles open for all descriptions of traffic, and an additional 31 miles for goods and parcels traffic only.

	Coaching Traffic.		Merchandise and Mineral Traffic.		Other earnings	Total earnings.	Traffic Train-miles run.		
	No. of passengers.	Coaching receipts.	Weight carried.	Receipts.			Coaching.	Merchandise.	Total.
		Rs. A. P.	Mds. s.	Rs. A. P.	Rs. A. P.	Rs. A. P			
Total traffic for the week ..	26,475	15,240 0 0	1,51,847 0	15,630 0 0	992 0 0	32,071 0 0	6,671	6,548	13,219
Or per mile of railway	47·45	27 33	257·80	26·88	1·03	55·89	11·96	11·12	23 08
For previous 6 weeks of half-year	168,320	97,243 0 0	9,44,967 0	86,601 0 0	8,256 0 0	1,92,100 0 0	37,343	48,043	85,386
Total for 7 weeks ..	194,795	1,12,402 0 0	10,96,814 0	1,02,431 0 0	9,248 0 0	2,24,171 0 0	44,014	54,591	98,605
Comparison.									
Total for corresponding week of previous year	22,035	13,058 0 0	1,03,626 0	14,241 0 0	913 0 0	28,242 0 0	6,772	5,465	12,237
Per mile of railway corresponding week of previous year ...	39·49	23·40	179·63	24·64	1·63	49·67	12·14	9·44	21 58
Total to corresponding date of previous year	185,757	1,10,970 0 0	7,77,057 0	1,14,679 0 0	9,325 0 0	2,35,174 0 0	43,952	42,571	86,523

FINANCIAL YEAR.

Approximate Statement of Gross Receipts of the Assam-Bengal Railway.

Receipts for week ended 16th August 1902.			Receipts for week ended 17th August 1901.			Total receipts from 1st April 1902 to 16th August 1902.			Total receipts from 1st April 1901 to 17th August 1901.			Total increase in 1902.	Total decrease in 1902.
Mean mileage worked.	Receipts.	Per mile worked.	Mean mileage worked.	Receipts.	Per mile worked.	Mean mileage worked.	Total receipts.	Per mile worked.	Mean mileage worked	Total receipts.	Per mile worked.		
	Rs.	Rs.		Rs.	Rs.		Rs.			Rs.		Rs.	Rs.
589	33,071	55·89	578	28,342	49·07	580	6,79,144	...	578	7,55,971	...	.....	76,827

DARJEELING-HIMALAYAN RAILWAY COMPANY, LIMITED.

			Rs.	A.	P.	Rs.	A.	P.
Approximate earnings for the week ending 23rd Aug. 1902 ...	Coaching	...	2,390	0	0			
	Goods	...	3,149	0	0	5,576	0	0
	Other earnings	...	37	0	0			
Audited earnings for the corresponding period of 1901 ...	Coaching	...	3,549	0	0			
	Goods	...	8,666	0	0	12,282	0	0
	Other earnings	...	67	0	0			
			Decrease		...	6,706	0	0
Receipts per mile for the week ending 23rd Aug. 1902		... ...	...		...	109	5	4
Ditto for the corresponding period of 1901		... ...	...		...	240	12	7
			Decrease		...	131	7	10
Receipts from 1st July to 23rd Aug. 1902		... ...	...		...	95,164	0	0
Ditto for the corresponding period of 1901		... ...	...		...	1,06,705	0	0
			Decrease		...	11,541	0	0

Printed at the Printing Office, and published by the Book Depôt, of the Bengal Secretariat, Writers' Buildings, in the City of Calcutta, on 3rd September 1902.

REGISTERED No. C209.]

No. 37 of 1902.

The Calcutta Gazette.

WEDNESDAY, SEPTEMBER 10, 1902.

CONTENTS.

	Page
PART I.—Orders and Notifications by the Lieutenant-Governor of Bengal, the High Court, Government Treasury, &c.	1209—1238
PART IA.—Orders and Notifications by the Government of India	143—154
PART IB.—Orders by the Lieutenant-Governor of Bengal	167—170
PART II.—Advertisements	1115—1143
PART III.—Acts of the Bengal Council	Nil
PART IV.—Bills of the Bengal Council	Nil
PART IVA.—Proceedings of the Bengal Legislative Council . .	Nil
PART V.—Acts of the Governor-General's Council assented to by the Governor-General . .	Nil
PART VI.—Bills introduced into the Council of the Governor-General for making Laws and Regulations or published under Rule 23	Nil

SUPPLEMENT No 37.—	Page
Extract from the Report on the Maritime Trade of Bengal, for the year 1901-1902, by the Collector of Customs, Calcutta	1251
Resolution on the Report of the Agricultural Branch of the Department of Land Records and Agriculture, for the year 1901-1902	1262
Resolution reviewing the Commissioners' Report on the working of the Puri Lodging House Act during the year 1901-1902	1264
Resolution on the Annual Report of the Port Officer, Calcutta, for the year 1901-1902	1267
Statistical Return of Crops, Abstract of Major and Minor Works, Circular and Eastern Canal, Meteorological Observation, Railway Traffic Receipts, &c., &c.	1268—1290

PART I

Orders and Notifications by the Lieutenant-Governor of Bengal, the High Court, Government Treasury, &c.

ORDERS BY THE LIEUT.-GOVERNOR OF BENGAL.

No. 4064A.

APPOINTMENTS AND TRANSFERS.

GENERAL.—*No. 2308A.D.—The 1st September 1902.*—Babu Chuni Lal Ray, B.A., Probationary Deputy Collector, is posted to the head-quarters station of the district of Manbhum.

Manbhum.

No. 2338A.D.—The 3rd September 1902.—The order of the 15th August 1902, appointing Babu Kali Coomar Ray Chowdry, Deputy Magistrate and Deputy Collector, Khulna, to have temporary charge of the Bagerhat subdivision of that district, is cancelled.

Khulna.

No. 2340A.D.—The 3rd September 1902.—Mr. C. P. Caspersz, Officiating District and Sessions Judge, 24-Parganas, is appointed to act, in addition to his own duties, as Additional Sessions Judge of Chota Nagpur, during the period of the ensuing Civil Court vacation. He is authorised, under section 193 of the Code of Criminal Procedure, to receive and dispose of all criminal applications and cases, during the absence, on vacation leave, of Mr. R. R. Pope.

24-Parganas
Chota Nagpur.

No. 2348A.D.—The 3rd September 1902.—Mr. J. A. L Swan, Assistant Magistrate and Collector, Darbhanga, is appointed to have charge of the Madhubani subdivision of that district, during the absence, on leave, of Mr. A. W. Watson, or until further orders.

Darbhanga.

No. 2380A.D.—The 5th September 1902.—Mr. L. J. Clarke, Deputy Magistrate and Deputy Collector, on leave, is posted to the head-quarters station of the district of Saran.

Saran

No. 2397A.D.—The 6th September 1902.—Babu Hari Bhushan De, Deputy Magistrate and Deputy Collector, Jessore, on leave, is posted to the head-quarters station of the district of Monghyr.

Jessore.
Monghyr.

No. 2400A.D.—The 6th September 1902.—Babu Siva Sankar Singh, Deputy Magistrate and Deputy Collector, Patna, is transferred to the head quarters station of the district of Champaran.

Patna.
Champaran.

No. 2402A D.—The 6th September 1902.—Maulvi Hashmat Hossain, Deputy Magistrate and Deputy Collector, Darbhanga, is transferred to the head-quarters station of the district of Patna.

Darbhanga.
Patna.

No. 2404A.D.—The 6th September 1902.—Babu Khirode Chandra Sen, Deputy Magistrate and Deputy Collector, Bogra, is transferred to the head-quarters station of the district of Darbhanga.

Bogra.
Darbhanga.

No 2411A.D.—The 8th September 1902.—Maulvi Abul Mahmud, Deputy Magistrate and Deputy Collector, Dacca, is transferred to the head-quarters station of the Murshidabad district.

Dacca.
Murshidabad.

No. 2413A D.—The 8th September 1902.—Babu Surat Chunder Chatterji, Deputy Magistrate and Deputy Collector, Murshidabad, is appointed to have charge of the Kandi subdivision of that district.

Murshidabad.

No. 2415A.D.—The 8th September 1902.—Babu Sukumar Haldar, Deputy Magistrate and Deputy Collector, Kandi, Murshidabad, is transferred to the head-quarters station of the Dacca district.

Murshidabad.
Dacca.

No. 2428A.D.—The 8th September 1902.—Mr. G. Rainy, Officiating Joint-Magistrate and Deputy Collector, Begusarai, Monghyr, is transferred temporarily to the head-quarters station of that district.

Monghyr.

No. 2430A.D.—The 8th September 1902.—Mr. A. Marr, Assistant Magistrate and Collector, Bhagalpur, is appointed temporarily to have charge of the Begusarai subdivision of the Monghyr district.

Bhagalpur.
Monghyr.

VOLUNTEERS.—*No. 2305A.D.—The 1st September 1902.*—The services of Second Lieutenant Frederick Blunt Wathen, Eastern Bengal State Railway Volunteer Rifles, are placed at the disposal of the Government of Madras, with effect from the 10th July 1902.

POLICE.—*No. 2422A.D.—The 8th September 1902.*—Babu Girindra Chunder Mookerjee, District Superintendent of Police, Bogra, is appointed to act as District Superintendent of Police, Mymensingh, during the absence, on leave, of Mr. A. A. Campbell, or until further orders

Bogra.
Mymensingh.

This cancels the order of the 14th August 1902, appointing Babu Janki Pershad Tewary, Officiating District Superintendent of Police, Pabna, to act as District Superintendent of Police, Mymensingh.

Pabna.
Mymensingh.

LEAVE.

GENERAL.—*No. 2338A.D.—The 3rd September 1902.*—The order of the 15th August 1902, granting privilege leave for one month and ten days to Babu Kali Das Mookerjee, Deputy Magistrate and Deputy Collector, Bagerhat, Khulna, is cancelled.

Khulna.

No. 2346A.D.—The 3rd September 1902.—Mr. A. W. Watson, Officiating Joint-Magistrate and Deputy Collector, Madhubani, Darbhanga, is allowed leave for twenty-seven days, under article 291 of the Civil Service Regulations, with effect from the forenoon of the 8th September 1902.

Darbhanga.

No. 2354A.D.—The 3rd September 1902.—Mr. W. J. Stark, Deputy Magistrate and Deputy Collector, Muzaffarpur, is allowed leave for one month, under article 291 of the Civil Service Regulations, with effect from the 5th September 1902.

Muzaffarpur.

No. 2387A.D.—The 6th September 1902.—Mr. R. C. Hamilton, Officiating Magistrate and Collector, Hooghly, is allowed leave for two months, under article 291 of the Civil Service Regulations, with effect from the afternoon of the 18th August 1902,

Hooghly.

No. 2395A.D.— The 6th September 1902 —Babu Burmeshwar Prosad, Deputy Magistrate and Deputy Collector, Bihar, Patna, is allowed leave for three months, under article 291 of the Civil Service Regulations, with effect from the date on which he may avail himself of it.

Patna.

No. 2417A.D.—The 8th September 1902.—Mr. P. C. Lyon, I.C.S., has been granted by His Majesty's Secretary of State for India an extension of furlough for four months.

POLICE.—*No. 2372A.D.—The 4th September 1902.*—Mr. C. B. Drake-Brockman, District Superintendent of Police, Bankura, is allowed combined leave for six months, viz, privilege leave for three months, under article 264A of the Civil Service Regulations, with effect from the 1st October 1902, and special leave for the remaining period under article 348 of the Regulations.

Bankura.

No. 2390A.D.—The 5th September 1902.—Mr. H. M. Parish, District Superintendent of Police, has been granted by His Majesty's Secretary of State for India an extension of furlough for one month.

No. 2418A.D.—The 8th September 1902 —Mr. H. W. Boileau, District Superintendent of Police, has been granted by His Majesty's Secretary of State for India a further extension of extraordinary leave without allowances for six months.

EXCISE.—*No. 2382A.D.—The 5th September 1902.*—Babu Monmohan Chakravarti, Special Excise Deputy Collector, Cuttack, is allowed leave for one and-a-half months, under article 291 of the Civil Service Regulations, with effect from the date on which he may be relieved.

Cuttack.

POWERS.

GENERAL.—*No. 2449A.D.—The 8th September 1902.*—Babu Prasanna Kumar Karfarmah, Deputy Collector, Khulna, is vested with the powers of a Collector under Act I of 1894 in that district.

Khulna.

The following orders are republished from the *Assam Gazette* :—

No. 6816G.— The 4th September 1902.—The following is published :—

The undermentioned officers have been granted by His Majesty's Secretary of State for India permission to return to duty, as advised in list dated the 8th August 1902 :

Name.	Service.	Appointment.	Date on which permitted to return.
Mr. L. J. Kershaw ...	I.C.S. ...	Deputy Commissioner, Assam.	Within period of leave.

No. 6868G.—The 3rd September 1902.—Mr. H. A. C. Colquhoun, I.C.S., Assistant Commissioner and Assistant to the Political Agent in Manipur and Superintendent of the State, is appointed to officiate temporarily as Deputy Commissioner, Naga Hills.

C. E. BUCKLAND,
Chief Secy. to the Govt. of Bengal.

NOTIFICATION.

No. 2448A.D.— The 8th September 1902.—It is hereby notified for general information that the second half-yearly departmental examination in 1902 of Assistant and Deputy Magistrates and Sub-Deputy Collectors in the Regulation and non-Regulation districts, of Cantonment Magistrates, and of officers of the Police, Medical, Forest, and Public Works Departments, will be held on Monday, the 3rd November 1902, and the two following days.

The examination will begin at 11 A.M. on each day.

C. E. BUCKLAND,
Chief Secy. to the Govt. of Bengal.

REVENUE DEPARTMENT.

NOTIFICATIONS.

No. 1752T.R.—The 5th September 1902.—The orders issued in Notification No. 3331-O., dated the 22nd August 1902, published in Part I, page 1154, of the *Calcutta Gazette* of the 27th idem, granting Mr. G. O'B. Power, Assistant Factory Superintendent, Ghazipur, privilege leave for two months, and appointing Mr. H. A. Jones, Assistant Opium Agent, to act in his place, are hereby cancelled.

Ghazipur.

No. 1762T.R.—The 6th September 1902.—Under the powers vested in him by section 3 of the Bengal Survey Act, V (B.C.) of 1875, the Lieutenant-Governor of Bengal is pleased to order that a survey shall be made of the lands comprised in the undermentioned villages in the district of Patna, and that the boundaries of estates, tenures, mauzas and fields be demarcated on the lands so to be surveyed :—

Patna.

Serial No.	Name of village.	Revenue Survey No.	Name of pargana.	REMARKS.
1	Bhathar Nizamat	23	Pillich.	
2	Kandopur	253	Samai.	
3	(*a*) Ashrafpur Baranwan Nezamat ... (*b*) Ditto ditto Mafichak Shahim (*c*) Ditto Mamlook Surkar ...	189	Shahjahanpur.	
4	(*a*) Burdiha Buzurg asli ... ... (*b*) Abu Mohamedpur dakhli ... (*c*) Burdiha Khurd uzrakbey ... (*d*) Ditto ditto ... (*e*) Ditto Buzurg (uzrakbey) maroof Fatma. (*f*) Burdiha Buzurg (uzrakbey) maroof Alimeh. (*g*) Burdiha Buzurg (uzrakbey) maroof Fatna. (*h*) Burdiha Buzurg (uzrakbey) maroof Roohi. (*i*) Burdiha Buzurg (uzrakbey) maroof Kolsoom. (*j*) Burdiha Buzurg (uzrakbey) maroof Peanandi.	29	Ditto.	
5	Rampur Lodipur	163	Ditto.	
6	(*a*) Shekhopur Judant ... ... (*b*) Ditto Nisf ... ... (*c*) Chuk Shekhopur do. ... ... (*d*) Mullik uzrakbey Shekhopur ... (*e*) Shekhopur uzrakbey ... (*f*) Kharrampur ... ... (*g*) Makhdumpur ... ... (*h*) Saidanpur Gool ... ... (*i*) Mai Buzurg ... ... (*j*) Bissambharpur ... ... (*k*) Saidanpur Gool uzrakbey .. (*l*) Makhdumpur Gool uzrakbey ... (*m*) Khoorampur and Makhdumpur uzrakbey. (*n*) Mullik Shahabad uz Saidanpur ... (*o*) Mai uzrakbey	331	Ditto.	
7	Pukori	475	Telhara.	
8	Ruksa	493	Ditto.	
9	(*a*) Saidpur Mosullah hissa ... ... (*b*) Ditto ... ... (*c*) Ditto ... ... (*d*) Ditto ... ... (*e*) Ditto ... ... (*f*) Diara mahazi Afzalpur	331	Azimabad.	
10	Uranda Jaiberpur Khurd	407	Ditto.	
11	Mahal Killadari	227	Ditto.	
12	(*a*) Sadikpur Jogi ... ... (*b*) Ditto ... ... (*c*) Ditto	319	Ditto.	
13	Dhakanpura	93	Ditto.	
14	Mohsinpur asli	177	Bhimpur.	
15	Rampur Toonsa chuk Seinpur asli ...	225	Ditto.	

Serial No.	Name of village.	Revenue Survey No.	Name of pargana.	REMARKS.
16	(*a*) Masudpur diara mokarri, ½ asli and ½ dakhli. (*b*) Masudpur diara Mashukhasi ... (*c*) Ditto Nezamut ... (*d*) Ditto uzrukbey ...	185	Bhimpur.	
17	Usmanpur	197	Ditto.	
18	Mustafapur Shahpur	167	Ditto.	
19	Alipur Beerpur Shahzadpur diara urf Kalla diara.	33	Ditto.	
20	(*a*) Dhamanli khurd ... ... (*b*) Latifpur dakhli ... ... (*c*) Rasoolpur dakhli ... ... (*d*) Chuk Dhamanli	105	Beswak.	
21	(*a*) Fatehpur Mahuri nisf ... ... (*b*) Ditto ... ... (*c*) Fatehpur Mahuri Ultamga ...	123	Ditto.	
22	Kasimpur	279	Ditto.	
23	(*a*) Pachasa ... ... (*b*) Chuk Faizaullah ... ... (*c*) Chuk Pachasa Aimey Kalan ...	113	Ditto.	
24	(*a*) Waccaoh Buzurg Nezamat ... (*b*) Goburdhunpur Waccaoh Nezamat ... (*c*) Narajpur ditto ... (*d*) Chuk Waccaoh Hafiz Nezamat ... (*e*) Rasoolpur Bhikunpur Waccaoh Nezamat. (*f*) Waccaoh khurd Nezamat ... (*g*) Chak Waccaoh Hafiz Ultamgha ... (*h*) Minjumla chuk Waccaoh Hafiz Aimey urf chuk Torulla chuk Basawan and chuk Saifullah. (*i*) Minjumla Waccaoh Buzurg aimali urf Kita Pulsair.	212	Bihar.	
25	Mahanandpur	259	Do.	
26	Chukdhi Buzurg and khurd	255	Do.	
27	Makhdumpur Jangipur	163	Do.	
28	(*a*) Majhauli ... ... (*b*) Chuk Sooltan	289	Balia.	
29	Diara Gyaspur	473	Gyaspur.	
30	Diara Benipur	...	Ditto ...	Farmed after the Gangetic survey.
31	(*a*) Said Azimpur urf Sikandarpur ... (*b*) Chak Natho ... ... (*c*) Said Azimpur urf Sikandarpur ...	573	Manair.	
32	Khizirpura	303	Ditto.	
33	Sarae Jahangirabad	593	Ditto.	
34	Ghora Katora	306	Narhat.	
35	Sadipur usli	247	Bhimpur.	
36	Erazi Bunglow Surgeon-Major ...	...	Azimabad ...	Farmed after the Revenue survey.
37	Do. Koriar	...	Ditto ...	
38	Do. Abkari Godown	...	Ditto ...	
39	Survey Siri Chandpur	519	Gyaspur.	
40	Nathopur	233	Fulwari.	
41	Diara Mohamadpur	759	Gyaspur.	
42	Mainpur Digha	165	Fulwari.	
43	Raipura	227	Bhimpur.	

No. 1763T.R.—The 6th September 1902.—Whereas it is expedient that a survey shall be made and a record of rights be prepared in respect of all the lands included in the estates mentioned below belonging to Government in the district of Patna, the Lieutenant-Governor of Bengal, in exercise of the powers conferred upon him by section 101 (2) (*c*) and section 101 (2) (*d*) of the Bengal Tenancy Act, VIII of 1885, as amended by Act III (B.C.) of 1898, is pleased to direct that a survey shall be made and a record of rights be prepared in respect of all lands included in the said estates.

Patna.

The particulars to be recorded in the survey and record of rights shall be the following :—

(*a*) The name of each tenant or occupant.

(*b*) The class to which each tenant belongs, that is to say, whether he is a tenure-holder, raiyat holding at fixed rates, settled raiyat, occupancy raiyat, non-occupancy raiyat or under-raiyat; and if he is a tenure-holder, whether he is a permanent tenure-holder or not, and whether his rent is liable to enhancement during the continuance of his tenure.

(*c*) The situation and quantity and one or more of the boundaries of the land held by each tenant or occupier.

(*d*) The name of each tenant's landlord.

(*e*) The money rent payable at the time the record of rights is being prepared, or if a produce rent, the fact that produce rent is paid.

(*f*) The mode in which that rent has been fixed, whether by contract, by order of a Court, or otherwise.

(*g*) If the rent is a gradually increasing rent, the time at which, and the steps by which, it increases.

(*h*) The special conditions and incidents, if any, of the tenancy.

(*i*) If the land is claimed to be held rent-free, whether or not rent is actually paid, and, if not paid, whether or not the occupant is entitled to hold the land without payment of rent, and, if so entitled, under what authority

This notification cancels notification No. 3736L.R., dated 25th November 1901, published in the *Calcutta Gazette* of 27th November 1901, Part I, page 1447.

Serial No.	Name of Estate.	Tauzi No.	Name of the Revenue Survey village in which the estate is situated.	Revenue Survey No.	Pargana.	Thana.	REMARKS
1	Sadipoor	1016			Gyaspur	Mokamah	Formed after the Revenue Survey
2	Pundarakh	397, 398	Pundarak 23 Kalan	804	Ditto	Barh.	
3	Rampur Dumra	411	Rampur Dumra	933	Ditto	Mokamah.	
4	Jazira Dumra	1000			Ditto	Ditto	Created after the Gangetic Survey.
5	Kashoha urf Diara Maranchi.	892	Maranchi Purtap *alias* Kusha.	563	Ditto	Ditto.	
6	Jazira Mekra	1003			Ditto	Ditto	Formed after the Revenue Survey
7	Diara Sultanpore	1014			Ditto	Ditto	
8	Diara Mokama	1004	Reilly ash and others.	480, 983, 481, 469, 475, 479, 969, 471 and 759	Ditto	Ditto	
9	Jazira Reilly	1007			Ditto	Barh.	
10	Diara Moreasdabad	1016			Ditto	Mokamah	Formed after the Revenue Survey.
11	Diara Nowbarar, mauza Reilly.	1008	Diara Nowbarar, mauza Reilly.	483	Ditto	Barh.	
12	Repura	1651			Manair	Manair	Transferred from Saran
13	Chak Basant	1652			Ditto	Ditto	
14	Taufir Mangalpal	746			Ditto	Ditto	Transferred from Shahabad
15	Island No. 31	1099			Ditto	Ditto	Transferred from Saran.
16	,, ,, 35	1650			Ditto	Ditto	
17	Lat Chak Dalip, comprising—	1207			Ditto	Ditto	
	(*i*) Chak Dalip	1267			Ditto	Ditto.	
	(*ii*) Hetampur	1267			Ditto	Ditto	
	(*iii*) Patlapoor	1267			Ditto	Ditto.	
	(*iv*) Bughee	1267			Ditto	Ditto.	
	(*v*) Shankerpoor Patti	1267			Ditto	Ditto.	
	(*vi*) Shankerpoor Khas	1267			Ditto	Ditto	
	(*vii*) Hissa Chak Basant	1267			Ditto	Ditto.	
18	Diara Afzalpoor	71	Saidpur Mosullah Hissa &c.	331	Azimabad	Peerbahore.	
19	,, Mascodpoor	147	Mascodpur Diara &c	185	Bhimpoor	Barh	
20	Kalia Diara	345	Alipur Beerpu Shahzadpur Diara urf Kalia Diara	33	Ditto	Do	
21	Diara Gyaspur	880	Diara Gyaspur	473	Gyaspur	Do.	
22	,, Ghans orpore I	899	Ditto	478	Ditto	Do	
23	,, Benipoor	1217			Ditto	Do.	Created after the Gangetic Survey.
24	Kurji Digha	74	Manipur Digha	165	Phulwari	Phulwari.	
25	Burdiha Buzurg	51	Burdiha Buzurg Abu Mahamadpur &c	29	Shahjehanpur	Hilsa.	
26	Chaneeochak Majhauli	189	Majhauli, &c.	280	Balia	Masaurhi.	
27	Chak Nathoo	237	Said Azi urf Sikandarpur, &c.	573	Manair	Manair.	
28	Sarai Jahangirabad	695	Sarai Jahangirabad	503	Ditto	Ditto.	
29	Erazi Abkari Godown	618			Azimabad	Chauk Kalan	Formed after the Revenue Survey.
30	Sadikpoor Jogee	277	Sadikpore Jogi	319	Ditto	Alamganj	
31	Usmanpore	157	Usmanpore	197	Bhimpur	Barh.	
32	Sadipoor	178	Sadipur Usli	247	Ditto	Do	
33	Bhathar	11	Bhathar Nezamat	23	Pilich	Hilsa	
34	Kandopoor	11	Kandopur	253	Samai	Bihar.	

Serial No.	Name of Estate.	Tauzi No.	Name of the Revenue Survey village in which the estate is situated.	Revenue Survey No.	Pargana.	Thana.	Remarks.
35	Ashrafpur	25	Ashrafpur Barwan Nezamat, &c.	180	Shahjehanpur	Hilsa.	
36	Lodipore Mustafapoor	174	} Rampur Lodipur ...	163	{ Ditto ...	Do.	
37	Rampur urf Usmanpoor	215			{ Ditto ...	Do.	
38	Makhdumpore	190	Shekhopur Judant, &c.	331	Ditto ...	Do.	
39	Bakour	35	Pukori	475	Telhara ...	Do.	
40	Baksa	377	Ruksa	493	Ditto ...	Do.	
41	Jahangirpore	95	Moshimpore asli ...	177	Bhimpore ..	Barh.	
42	Mominpore	144	Rampur Toonsa Chak Selimpur asli.	225	Ditto ...	Futwa.	
43	Shahpore Mustafapore	185	Mustafapur Shahpur	167	Ditto ...	Barh.	
44	Dhamauli	101	Dhamauli Khurd, &c.	105	Beswak ...	Bihar.	
45	Fatehpore Mahuri ...	111	Fatehpur Mahuri Nisf, &c.	123	Ditto ...	Islampur.	
46	Kasimpore	144	Kasimpur	279	Ditto ...	Ditto.	
47	Pichasa	190	Chak Pachasa Aimey Kalan, &c.	113	Ditto ..	Bihar.	
48	Oiao	598	Waccaoh Buzurg Nezamat, &c.	213	Bihar ..	Do.	
49	Chukdhi	598	Chukdhi Buzurg and Khurd.	255	Do. ...	Do.	
50	Mohanandpore	598	Mahanandpur	259	Do. ...	Do.	
51	Zunnipore	598	Makhdumpur Jangipur.	163	Do. ...	Do.	
52	Ghora Katora .. ...'	10	Ghora Khatora ..	306	Narhat .	Do.	
53	Khizirpura	404	Khizirpura ...	303	Manair ...	Manair.	
54	Raipura	174	Raipura	227	Bhimpore .	Fatwa.	
55	Rampore tappe Bakawun	723	Durvey Srichandpur	519	Gyaspore ..	Barh.	
56	Nathopore ...	294	} Nathopur	333	Phulwari ...	Phulwari.	
57	Chak Kazi Syed Mohamed.	296					

No. 1764T.R.—The 6th September 1902.—Whereas a settlement of land revenue is being made or is about to be made in respect of the undermentioned temporarily-settled private estates in the district of Patna:

Patna.

In exercise of the powers conferred upon him by section 101 (2) (*d*) of the Bengal Tenancy Act, VIII of 1885, as amended by Act III (B.C.) of 1898, the Lieutenant-Governor of Bengal is pleased to direct that a survey should be made and a record of rights prepared in respect of all lands included in the said estates in the district of Patna.

The particulars to be recorded in the survey and record of rights shall be the following:—

(*a*) The name of each tenant or occupant.

(*b*) The class to which each tenant belongs, that is to say, whether he is a tenure-holder, raiyat holding at fixed rates, settled raiyat, occupancy raiyat, non-occupancy raiyat or under-raiyat, and if he is a tenure-holder, whether he is a permanent tenure-holder or not, and whether his rent is liable to enhancement during the continuance of his tenure.

(*c*) The situation and quantity and one or more of the boundaries of the land held by each tenant or occupier.

(*d*) The name of each tenant's landlord.

(*e*) The money rent payable at the time the record of rights is being prepared, or if a produce rent, the fact that a produce rent is paid.

(*f*) The mode in which that rent has been fixed, whether by contract, or by order of a Court or otherwise.

(*g*) If the rent is a gradually increasing rent, the time at which, and the steps by which, it increases.

(*h*) The special conditions and incidents, if any, of the tenancy.

(*i*) If the land is claimed to be held rent-free, whether or not rent is actually paid, and if not paid, whether or not the occupant is entitled to hold the land without payment of rent, and if so entitled, under what authority.

Serial No.	Name of Estate	Tauzi No.	Name of the Revenue Survey village in which the estate is situated.	Revenue Survey No.	Pargana	Thana.
1	Mekra Mahazi Diara.	924	Mankouta ...	239	Gyaspore	Mokamah.
2	Diara Dariyapore Dhibar.	390	Diara Dariyapore Dhibar.	471	Ditto	Barh.
3	Diara Sahnora ...	401	Diara Sohnora ...	489	Ditto	Do.
4	Diara Ghansoorpore II.	1219	Diara Gyaspore ...	473	Ditto	Do.

W. C. MACPHERSON,
Offg. Secy. to the Govt. of Bengal.

NOTIFICATION

UNDER the provisions of section 2, Act VI of 1876, as amended by Act V of 1884,

Ranchi. Babu Tripura Charan Roy, General Manager of the Wards' and Encumbered Estates in the district of Ranchi, is appointed to be the Manager, and the management is vested in him, of the undermentioned immoveable property of Mussamut Taramoni Mankain, of Tarai, in the district of Ranchi, and of any other immoveable property to which the said holder is entitled in her own right, or which she is entitled to redeem, or which may be acquired by, or devolve on, her or her heirs during the continuance of such management:—

Name of estate.	Name of holder.
Tarai estate, consisting of thirty-two villages and-a-half in the district of Ranchi.	Mussamut Taramoni Mankain, of Tarai.

RANCHI, *the 20th August 1902.* F. A. SLACKE, *Offg. Commissioner.*

GENERAL DEPARTMENT.

NOTIFICATIONS.

No. 1429 T.G.—The 2nd September 1902.—The following Notification of the Government of India is published for general information.

W. C. MACPHERSON,
Offg. Secy. to the Govt. of Bengal.

No. 324, dated Simla, the 22nd August 1902.

NOTIFICATION—By the Government of India, Home Department.

THE following amendments are made to Rule XXII, Part I of the Ecclesiastical Rules, published with the Notification of the Government of India, No. 178, dated the 21st May 1897.

For the word "Chaplain" read "officer who has charge of the cemetery under the operation of Rule I," and add the following at the end of the rule:—

"In stations where there is no resident Chaplain and there is a difficulty in arranging for a joint inspection by the officer in charge of the cemetery and the Executive Engineer, the annual inspection may be made by the Executive Engineer alone, who will forward the report to the Archdeacon through the officer who has charge of the cemetery.

No. 2916.—The 9th September 1902.—In modification of Rule 8 of the Rules for award of junior Scholarships at the University Entrance Examination, published under this Department's Notification, dated the 1st January 1890, it is hereby notified for general information that from the year 1903 junior scholarships of the second and third grade's will be allotted to the several Commissionerships in the following proportion:—

	Second grade.	Third grade.
Burdwan Division	5	11
Town of Calcutta	5	10
Presidency Division	5	11
Rajshahi ,, ...	5*	9*
Dacca ,, ...	5	11
Chittagong ,, ...	2	5
Patna ,, ...	5	11
Bhagalpur ,, ...	3	8
Orissa ,, ...	4	6
Chota Nagpur ,, ...	2	5
Total ...	41	87

* Including two special scholarships for the Rangpur Zilla School.

2. In addition to the 128 scholarships of the second and third grades assigned to Divisions, as above shown, six scholarships of the second grade and eight scholarships of the third grade will be awarded to students passing the school examinations of the B and C Standards.

3. It is also notified that from the year 1903 four out of the ten junior scholarships of the first grade awarded under Rule 7 of the Rules of January 1890 above cited will be awarded to students passing the school examinations of the B and C Standards if so many students be found to be deserving of such scholarships.

W. C. MACPHERSON,
Offg. Secy. to the Govt. of Bengal.

FINANCIAL DEPARTMENT.

NOTIFICATION.

No. 1292T.F.—The 2nd September 1902.—It is hereby notified for general information that, in exercise of the power conferred by section 157 (*a*) of the Sea Customs Act, VIII of 1878, the Lieutenant-Governor extends the provisions of section 60 of the Act to all coasting vessels other than those owned and manned by natives and vessels plying under general passes as described in section 164.

E. W. COLLIN,
Offg. Secy. to the Govt. of Bengal.

MEDICAL DEPARTMENT.

No. 1523T.M.—The 2nd September 1902.—Major J. T. Calvert, I.M.S., Civil Surgeon of Cuttack, is allowed privilege leave for one month, under article 291 of the Civil Service Regulations, with effect from the 8th September 1902, or any subsequent date on which he may avail himself of it.

Cuttack.

No. 1525T.M.—The 2nd September 1902.—Assistant Surgeon Annada Lal Bose, Teacher of Surgery and Midwifery, Cuttack Medical School, is appointed temporarily to have medical charge of the district of Cuttack, in addition to his own duties, during the absence, on leave, of Captain J. T. Calvert, I.M.S, or until further orders.

Cuttack.

E. W. COLLIN,
Offg. Secy. to the Govt. of Bengal.

NOTIFICATION.

No. 1631T.M.—The 6th September 1902.—The following papers are published for general information.

E. W. COLLIN,
Offg. Secy. to the Govt. of Bengal.

ARRANGEMENTS FOR THE SUPPLY OF NURSES TO THE CALCUTTA HOSPITALS.

THE attention of Government has been drawn to the advisability of improving the arrangements for the supply of nurses to the hospitals in Calcutta. The nursing arrangements have been hitherto managed by the Calcutta Hospital Nurses Institution under a Committee of Ladies, assisted by the Trustees of the Canning Fund and the Sisters of the Canning Home. The Nursing Institution was first established in 1859 on a small scale with funds obtained by public subscription. It has since been managed with great success by the Ladies' Committee. It now supplies about one hundred nurses to the hospitals, and it has, with the help of the Sisters of the Canning Home, trained a number of nurses for private employment. The necessary funds have been raised from the public by the Ladies' Committee, and Government has contributed by grants which, since 1884, have been fixed at treble the amount subscribed, subject to a maximum of Rs. 37,500.

2. The recent extensions of the Presidency General Hospital and the increase of the Nursing Staff at the Medical College, Eden and allied Hospitals have shown that it is desirable to place the system on a wider basis, in order to make the arrangements more effective and secure a larger support from all classes of the community. The public are indebted to the Ladies' Committee, who have succeeded in collecting annually from Rs. 12,000 to Rs. 14,000, while the total expenditure has amounted in recent years to over Rs. 60,000, and is increasing. It is hoped that, with the appointment of a Committee, representing all classes of the community, both European and Indian, a larger income will be obtained from the public, and that the arrangements, which can be made for the provision of nurses, will more adequately fulfil the increasing requirements.

3. Rules have been framed (which are appended to this note) constituting a General Committee and two Sub-Committees, whose duties will be mainly financial. There will also be a Committee of ladies (to succeed the present Ladies' Committee), who will visit the hospitals and, with the

Sisters of the Canning Home, deal with all matters affecting the appointment and control of the Nursing Staff. The assistance of Government will be continued as heretofore, or on such a scale as may be found necessary. The rules have been considered and accepted by the Ladies' Committee, the Trustees of the Canning Fund, and the Sister Superior, and the new arrangements may be now introduced. The ladies and gentlemen included in the annexed list have agreed to serve on the Committee, and the Hon'ble Mr. M. C. Turner has consented to become the first President. It is understood that a Secretary will be appointed by the Committee. The Lieutenant-Governor acknowledges his obligations to those who have kindly consented to join the new Committee, and hopes that they will take early steps to relieve the Committee of the Nursing Institution of their duties. In taking leave of the Ladies' Committee, he desires to express the thanks of Government for the great services which they have rendered for a period of over forty years in the cause of charity and for the relief of suffering.

By order of the Lieutenant-Governor of Bengal,

E. W. COLLIN,

The 4th August 1902. *Offg. Secy. to the Govt. of Bengal.*

Rules for the Management and Control of the Nursing Arrangements of the Calcutta Hospitals.

1. *Constitution of Committees and Sub-Committees.*—There shall be one General Committee for all the institutions. All of the members and the President shall be appointed by Government. The Secretary may be appointed by the Committee. A member who is absent from Calcutta for six months thereby vacates his or her appointment. Temporary members to fill vacancies for not more than six months may be elected by the other members, and shall on election be members of the Sub-Committees on which the members whom they replace were serving

2. The General Committee shall include at least six ladies and three native gentlemen. The Principal of the Medical College, Calcutta, the Superintendent of the Presidency General Hospital, and the Sister Superior shall be members *ex-officio*.

3. The members of the General Committee shall appoint two Sub-Committees of Management—one for the General Hospital and the other for the Medical College and the allied hospitals. Each of these Sub-Committees shall consist of not more than ten members. The proportion of ladies to gentlemen shall not exceed 1 to 3. The Principal of the Medical College and the Surgeon-Superintendent of the Presidency General Hospital shall be members *ex-officio* of the Sub-Committees of their respective hospitals. In their absence at meetings the next Senior Officers shall act for them.

4. There shall also be a Ladies' Committee, which shall consist of not more than nine members. It shall include the ladies who have been appointed on the General Committee, if they are willing to serve on it; and such other ladies as may be selected by them. The ladies on the General Committee may be members of the Ladies' Committee and of a Sub-Committee of Management. The Ladies' Committee shall elect its own President and Vice-President.

5. Each Sub-Committee and the Ladies' Committee shall elect its own Secretary. The Secretary of the General Committee may be Secretary also of one of the Sub-Committees.

6. The Ladies' Committee shall deal with all matters hereafter delegated to it in regard to both groups of hospitals. Separate books shall be kept for each group of hospitals

7. In the absence of the President, the General Committee or a Sub-Committee shall elect its Chairman for the day.

8. *Duties of the General Committee.*—The General Committee shall ordinarily meet twice a year, early in February and in August, to dispose of matters of importance affecting the nursing arrangements of all the hospitals, to apportion funds which are not specifically subscribed for a particular institution, to consider references from the Managing Sub-Committees, to elect temporary members, &c.

9. *Duties of Sub-Committees of Management.*—The Managing Sub-Committees shall hold their ordinary meetings once in three months. The first and third ordinary meetings of each year shall be held at least 14 days before the corresponding meetings of the General Committee The Sub-Committees shall collect subscriptions, sanction expenditure, and approve estimates for minor works. They shall consider any questions referred to them by the Ladies' Committee, and decide what questions are to be referred to the General Committee.

In addition to the four ordinary meetings, the Sub-Committees may have special meetings at their discretion. Three members of a Sub-Committee shall form a quorum.

10. *Duties of the Ladies' Committee.*—The Ladies' Committee shall meet not less frequently than once in two months, and more often when necessary, for the conduct of business or matters of detail. Three members of the Committee shall form a quorum.

The Ladies' Committee will, in consultation with the Sisters and Medical Officers, consider medical questions relating to nursing, and also with the Sisters dispose of all other matters, regarding the appointment, discipline, control, promotion, reward, and dismissal of nurses, and such other domestic matters as may be referred to them by the Sisters. In dealing with matters of promotion and discipline, the Ladies' Committee and the Sisters shall consult the medical staff as to the professional qualifications of the nurses No nurse shall be appointed without a medical certificate of fitness. The Sisters will, in consultation with the medical staff of the hospitals, arrange for the instruction of the nurses in medical subjects.

11. The Ladies' Committee shall appoint, from among their own number, visitors to the hospitals.

12. All general orders shall be given in the name of the Committee, Managing Sub-Committee, or Ladies' Committee as a whole. Temporary orders to meet emergencies may be passed by the Secretary to the Ladies' Committee or by the appointed lady visitors. No individual member of the Committee or Sub-Committees shall give instructions to the Sisters or nurses.

13. The Managing Sub-Committees shall sit together occasionally to consider the best means of raising subscriptions. They should consider whether any changes are advisable in the methods of obtaining subscriptions, and how far they should act independently in the interests of their own institutions. Also how contributions can best be obtained from Europeans and Natives, whether by subscriptions, donations, canvassing, advertisement, caste and sect collections, or otherwise. They should also ascertain the financial obligations of their predecessors and the ways of meeting them, and advise the General Committee as to allotment of funds to the different institutions.

Each Managing Sub-Committee shall also sit by itself to discuss matters of detail relating to its own charge, to carry out the orders of the General Committee and the decisions of any combined meetings of the Managing Sub-Committee, and to frame the annual budget of its own charge.

14. The Ladies' Committee shall draw up any special regulations that may be necessary for their own guidance. These regulations, if they affect the working of a hospital in any way, shall be communicated to the head of the institution, who will submit them to the Inspector-General of Civil Hospitals for approval before they are brought into operation. Lady visitors as well as any other members of the General Committee who may visit one of the institutions should write their remarks in the visitors' book in which columns are left for the observations of the Medical Officers and the Sisters.

15. *Relations of Medical Staff towards the Nurses.*—If the Chief Medical Officer of a hospital considers any nurse to be unsuitable owing to bad physique, health, or temper, want of tact, or for professional reasons, he will communicate his views to the Sister in charge for communication to the Sister Superior and the Ladies' Committee, who will meet them as far as practicable. Otherwise, and except as provided in rule 10, the medical staff will not interfere in the appointment, promotion, increase of pay, rewards or dismissal of nurses.

16. General rules affecting the medical work of the nurses in the hospitals shall not be changed in any way without the consent of the Medical Officer, who shall, if necessary, refer the matter to his own departmental superior.

18. *Training of nurses.*—The training of the nurses by the Sisters in charge will be supplemented by regular instruction from the resident medical staff. Examinations will be held in both branches (that of nursing taught by the Sisters in charge and that for which the medical staff are responsible), and certificates will be given, which will be signed by the Sister in charge, the head of the medical institution, and the Sister Superior with reference to the character of the nurse.

19. Detailed rules will be prepared by the Chief Medical Officer of each institution and the Sister Superior showing the subjects and course of instruction, hours of attendance, duration of training, and the period for which the nurses must serve in the hospital after they are qualified to receive their diplomas. A nurse will not actually receive her diploma until the prescribed period, which will be stated in her agreement, has expired. Complete lists of qualified nurses available for outdoor work should be kept up and supplied to medical practitioners, hospitals, &c.

20. *General.*—Although the functions of the Committee and of the Sub-Committees are limited to the collection of funds, and the supply, training, and discipline of the nurses, all members are entitled and are invited to represent to the Inspector-General of Civil Hospitals, as the head of the Medical Department, and the Chief Medical Officers, any other matter which may come to their notice in the course of their duties or visits in connection with the hospitals.

E. W. COLLIN,

Offg. Secy. to the Govt. of Bengal.

Committee for the Management of the Nursing Staff, Calcutta Hospitals.

The Hon'ble Mr. M. C. Turner, *President.*
Sir Allan Arthur, Kt.
Mr. H. S. Ashton.
„ T. Fraser.
Maharaja Bahadur Sir Narendra Krishna, K C.I.E.
Nawab Syud Amir Hossein Bahadur, C.I.E.
Mr. Nolin Behari Sirkar.
„ A. F. Abdur Rahman.
„ H. M. Rustomjee.
„ H. W. Cassels.
„ W. C. Madge.
Mr. W. Parsons.
„ W. J. Bradshaw.
„ J. Nicoll.
Mrs. C. Hill.
„ Shelton.
„ Luckman.
The Hon'ble Mrs. Ramsden.
Mrs. H. S. Ashton.
„ Sarkies.
The Sister Superior, Lady Canning Home.
„ Principal of the Medical College.
„ Surgeon-Superintendent of the Presidency General Hospital.

JUDICIAL DEPARTMENT.

No. 4065A.

APPOINTMENTS AND TRANSFERS.

No. 2362A.D.—The 4th September 1902.—Babu Gobind Gopal Gupta, Munsif of Amta, in the district of Hooghly, on leave, is appointed to be a Munsif in the district of Jessore, to be ordinarily stationed at Bagerhat, and is vested with the powers of a Judge of a Court of Small Causes for the trial of suits cognizable by such a Court up to the value of Rs. 100, within the local limits of the Bagerhat Munsifi.

Hooghly.
Jessore.

No. 2364A.D.—The 4th September 1902.—Babu Sarat Chandra Ghose, Munsif of Bagerhat, in the district of Jessore, is appointed to be a Munsif in the district of Hooghly, to be ordinarily stationed at Amta, and is vested with the powers of a Judge of a Court of Small Causes for the trial of suits cognizable by such a Court up to the value of Rs. 100, within the local limits of the Amta Munsif.

Jessore.
Hooghly.

No. 2406J.D.—The 6th September 1902.—The undermentioned gentlemen are appointed to be Honorary Magistrates of the Sadar Independent Bench, in the district of Howrah :—

Howrah.

Mr. Alexander Hale. | Babu Matilal Chatterjee.

LEAVE.

No. 4063A.—The 6th September 1902.—Babu Upendra Nath Bhanja, Munsif of Thakurgaon, in the district of Dinajpur, is allowed leave for eighteen days, under article 306 (*b*) of the Civil Service Regulations, in extension of that granted to him under the order of the 1st August 1902.

Dinajpur.

RESIGNATION.

No. 2373J.D.—The 3rd September 1902.—The Lieutenant-Governor accepts the resignation tendered by Maulvi Danesh Ali Joardar of his appointment as an Honorary Magistrate of the Independent Bench at Jhenida, in the district of Jessore.

Jessore.

POWERS.

No. 2352A.D.—The 3rd September 1902.—Mr. T. S. Thomas, Officiating Joint-Magistrate, Monghyr, is vested with powers under section 110 of the Code of Criminal Procedure.

Monghyr.

No. 2420A.D.—The 8th September 1902.—Babu Kumud Bandhu Das Gupta, Deputy Magistrate, Burdwan, is vested with powers under sections 110 and 133 of the Code of Criminal Procedure. He is also vested with the power to try summarily the offences mentioned in section 260 of the Code.

Burdwan.

No. 2404J.D.—The 6th September 1902.—The undermentioned gentlemen, who have been appointed to be Honorary Magistrates of the Sadar Independent Bench, in the district of Howrah, are vested with the powers of a Magistrate of the third class :—

Howrah.

Mr. Alexander Hale. | Babu Matilal Chatterjee.

C. E. BUCKLAND,
Chief Secy. to the Govt. of Bengal.

NOTIFICATIONS.

No. 2332J.D.—The 2nd September 1902.—It is hereby notified for general information that, in modification of this Government notification, dated the 1st September 1891, published at page 818, Part I of the *Calcutta Gazette* of the 2nd September 1891, the Lieutenant-Governor appoints Darjeeling as well as Dinajpur as places for the trial of persons committed to the Sessions by any Magistrate at Siliguri. Persons committed by Magistrates at Darjeeling or Kurseong will be tried as heretofore at Darjeeling.

Dinajpur.
Darjeeling.

No. 2359J.D.—The 2nd September 1902.—Under section 134 of Act IX of 1890 (The Indian Railways Act), the Lieutenant-Governor hereby notifies the place at which persons committing any offence against the said Act or any rule thereunder in the undermentioned localities may be tried:—

Gaya.
Shahabad.

Place at which offence is committed	Place of trial.
Palmerganj Railway Police station within the subdivision of Aurangabad, Gaya district.	Sasaram.
Bhabhua Railway Police station within the subdivision of Bhabhua, district Shahabad.	Ditto.

No. 2437J.D.—The 8th September 1902.—In exercise of the powers conferred by section 5 of the Indian Explosives Act (IV of 1884), and with the previous sanction of the Governor-General in Council, the Lieutenant-Governor is pleased to make the following amendments in the Rules for the manufacture, possession and sale of explosives published with the Notification of this Government No. 4971J., dated the 23rd October 1897:—

1. To Rule 9 prefix the words "Save as hereinafter provided," and add the following proviso to the Rule, viz.—

"Provided that the holder of a license duly granted in Form VI-B or in Form VII-B under Rule 11 of the Rules made under the Indians Arms Act, 1878 (XI of 1878), may, on production of such license before the District Magistrate, or, in a Presidency town and its suburbs, before the Commissioner of Police, be granted a license under Rule 8 without payment of fees."

2. Insert the words "granted by the like authority" after the words "a like license" in Rule 36.

[Second Publication.]

No. 3981J.—The 9th August 1902.—In exercise of the powers conferred by section 2 of Bengal Act II of 1867 (*an Act to provide for the punishment of public gambling and the keeping of common gaming-houses in the territories subject to the Lieutenant-Governor of Bengal*), the Lieutenant-Governor is pleased to extend all the sections of that Act to the Khulna Municipality, with effect from the 1st October 1902.

Khulna.

C. E. BUCKLAND,
Chief Secy. to the Govt. of Bengal.

ERRATA.

No. 2393J.D.—The 6th September 1902.—In Notification No. 3596J, dated the 12th August 1902, published at page 1112, Part I of the *Calcutta Gazette* of the 13th August 1902, vesting Babu Kedar Nath Mukerjee, an Honorary Magistrate of the Independent Bench at Sealdah, in the district of the 24-Parganas, with the powers of a Magistrate of the second class, and authorising him to sit singly for the trial of such cases as may be made over to him by the District Magistrate, for the words "District Magistrate" *read* "Deputy Magistrate of Sealdah."

24-Parganas.

No. 2395J.D.—The 6th September 1902.—In Notification No. 3034J., dated the 23rd July 1902, published at page 1058, Part I of the *Calcutta Gazette* of the 30th July 1902, vesting Babu Harish Chandra Neogy, an Honorary Magistrate of the Independent Bench at Sealdah, in the district of the 24-Parganas, with the powers of a Magistrate of the second class, and authorising him to sit singly for the trial of such cases as may be made over to him by the District Magistrate and to record evidence in criminal cases in the English language, for the words "District Magistrate" *read* "Deputy Magistrate of Sealdah."

24-Parganas.

C. E. BUCKLAND,
Chief Secy. to the Govt. of Bengal.

PROCLAMATION.

No. 2537½J.D.—The 4th September 1902.—Under section 15 of Act V of 1861 (as amended by Act VIII of 1895), the Lieutenant-Governor declares that the Proclamation No. 1628J.D., dated the 13th September 1901, published in the *Calcutta Gazette* of the 18th idem, in accordance with which additional police were appointed for a period of one year in the village of Sherpur, police-station Dalsingserai, district Darbhanga, shall be continued, and that an additional police shall remain quartered in the aforesaid village for a further period of six months, with effect from the 13th September 1902.

Darbhanga.

C. E. BUCKLAND,
Chief Secy. to the Govt. of Bengal.

POLITICAL DEPARTMENT—(JAILS).

DECLARATION.

No. 1935P.—The 5th September 1902.—Whereas it appears to the Lieutenant-Governor of Bengal that land is required to be taken by Government at the public expense for a public purpose, viz., for the extension of the garden attached to the Dacca Central Jail, in mahallas Gridakilla, Bakshi Bazar and Bazar Chuhar, pargana Jahangirnagar, zilla Dacca, it is hereby declared that for the above purpose a piece of land measuring, more or less, 8 bighas and 16 dhoors of standard measurement, bounded as follows:—

Dacca.

Block No. I.—On the north by block No. II, on the south by public lane and the house of Booha Mia, on the east by public road, and on the west by block II and the houses of Niranjan Babu and Booha Mia,

Block No. II.—On the north, east and west by public road, and on the south by block I and the house of Niranjan Babu,

Block No. III.—On the north by the Musjidbari of Kala Gazi, and on the south, east and west by public road,

is required within the aforesaid mahallas Gridakilla, Bakshi Bazar and Bazar Chuhar

This declaration is made, under the provisions of section 6 of Act I of 1894, to all whom it may concern.

A plan of the land may be inspected in the office of the Collector of Dacca.

C. E. BUCKLAND,
Chief Secy. to the Govt. of Bengal.

PUBLIC WORKS DEPARTMENT.

ESTABLISHMENT.

The 5th September 1902.

No. 184.—Mr. K. H. Stephen, Superintending Engineer, third class, has been granted by His Majesty's Secretary of State for India furlough up to 1st April 1903 in extension of that previously granted in Bengal Government Notification No. 109, dated the 1st April 1901.

The 8th September 1902.

No. 185.—Mr. G. C. Maconchy, Executive Engineer, Northern Drainage and Embankment Division, and Officiating Sanitary Engineer, Bengal, is granted privilege leave for three months, under article 291, Civil Service Regulations, combined with special leave on urgent private affairs for three months, under articles 348 and 264A (*a*) of the Civil Service Regulations, with effect from the 30th September 1902, or such subsequent date as he may avail himself of it.

The 9th September 1902.

No. 187.—The following extract from a notification issued by the Government of India in the Public Works Department is republished for information:—

No. 314, dated the 3rd September 1902.—The Governor-General in Council is pleased to order the following promotions and reversion to and in the classes of Chief and Superintending Engineer attached to the Irrigation, Roads and Buildings Branch, with effect from the dates specified:—

NAMES.	From—	To—	Nature of promotion or reversion.	With effect from—
*	*	*	*	*
				1902.
Higgins, A. F. ...	Superintending Engineer, 2nd class.	Superintending Engineer, 1st class.	Temporary ...	3rd August.
*	*	*	*	*
Horn, D. B. ...	Chief Engineer, 3rd class, *temporary rank.*	Chief Engineer, 2nd class.	Temporary ...	21st August.
Inglis, W. A. ...	Superintending Engineer, 1st class, and Officiating Chief Engineer.	Chief Engineer, 3rd class.	Ditto ...	21st ,,
White, C. A. ...	Executive Engineer, 1st grade, and Officiating Superintending Engineer.	Superintending Engineer, 3rd class.	Ditto ...	21st ,,
Thomson, A. S. ...	Executive Engineer, 1st grade.	Superintending Engineer, 3rd class.	Permanent ...	23rd ,,

D. B. HORN,
Secy. to the Govt. of Bengal.

CIVIL BUILDINGS.

The 9th September 1902.

No. 188.—Corrigendum.—In this Office Declaration No. 163, of the 22nd July 1902, published at page 1034, Part I of the *Calcutta Gazette* of the 23rd idem, in respect of the land required for the extension of the Civil Court compound, Barisal, for "on the west by municipal land and privy" read "on the east by municipal land and privy."

W. A. INGLIS,
Offg. Secy. to the Govt. of Bengal.

IRRIGATION DEPARTMENT.

The 9th September 1902.

No. 186.—Notification.—His Honour the Lieutenant-Governor of Bengal is pleased to direct, under the powers vested in him by section II of Act V (B.C.) of 1864, that from and after the date of this notification the provisions of Act V (B.C.) of 1864 shall apply to and be in force as regards the following navigable channel, namely, the navigable channel (approximately 4,870 feet in length) connecting the river Madhumati with the river Noboganga, in the Narail subdivision of the Jessore district, and passing through the villages of Telkora and Bordia in the said subdivision.

D. B. HORN,
Secy. to the Govt. of Bengal.

RAILWAY DEPARTMENT.

The 8th September 1902.

No. 182R.—Notification.—Babu Dakshina Ranjan Ghose, Deputy Magistrate and Deputy Collector, Ranchi, is appointed to acquire land needed for the extension of the Howrah-Amta Light Railway from Jagatballabpur to Champadanga *viâ* Prasadpur and Autpur, in the district of Hooghly.

The 9th September 1902.

No. 183R.—Declaration.—Whereas it appears to the Lieutenant-Governor of Bengal that land is required to be taken by Government at the public expense for a public purpose, viz., for the Gaya-Katras Railway (Plains section), in the district of Gaya, it is hereby declared

that for the above purpose a piece of land measuring, more or less, 22 58 acres, bounded on the north by the land of Gaya-Katras Railway main line, on the south and west by the land of village Gopal Kera, and on the east by the land of village Dumrichati, is required within the villages named in the following schedules of an approximate area in each case as therein stated.—

District.	Tahsil.	Name of village	Area in acres
Gaya ...	Barachati ..	Gopal Kera	... 17 92
		Chamra chak	... 1·56
		Dumrichatti	.. 3·10
		Total	... 22·58

Mines of coal, iron-stone, slate or other minerals lying under the land, except only such parts of the mines and minerals as it may be necessary to dig or carry away, or use in the construction of the work for the purpose of which the land is being acquired, are not needed.

This declaration is made, under the provisions of section 6 of Act I of 1894, and section 3, clause (1), Act XVIII of 1885, to all whom it may concern.

A plan of the land may be inspected in the office of the District Engineer, East Indian Railway, Gaya.

No 184R —Declaration.—Whereas it appears to the Lieutenant-Governor of Bengal that land is required to be taken by Government at the public expense for a public purpose, viz , for an assisted siding to Jote Mokoot for British India Steam Navigation Company, Limited, in the villages of Jemari, Bogra and Jote Mokoot, pargana Shergarh, zilla Burdwan, it is hereby declared that for the above purpose a strip of land measuring, more or less, 140 bighas 17 cottahs 10·09 chitaks of standard measurement (corresponding to 46 acres 2 roods 11·59 poles), 3 miles and 1,210 feet in length, starting from mile No. 124, feet 2,630 of the main line, East Indian Railway between Raniganje to Asansol, and varying in width from 220 feet to 70 feet, and running from north to south, is required within the aforesaid villages of Jemari, Bogra and Jote Mokoot.

Mines of coal, iron-stone, slate or other minerals lying under the land, except only such parts of the mines and minerals as it may be necessary to dig or carry away, or use in the construction of the work for the purpose of which the land is being acquired, are not needed

This declaration is made, under the provisions of section 6 of Act I of 1894, and section 3, clause (1), Act XVIII of 1885, to all whom it may concern.

A plan of the land may be inspected in the office of the District Engineer, East Indian Railway, Asansol.

W. A. INGLIS,

Offg. Secy. to the Govt. of Bengal.

MARINE DEPARTMENT.

The 8th September 1902.

No. 123 Marine.—Mr R. H. Shelverton, Licensed Branch Pilot, is granted leave without allowance for one month and three days, under article 372 of the Civil Service Regulations, with effect from the 18th August 1902.

D. B. HORN,

Secy. to the Govt. of Bengal.

SUBORDINATE CIVIL SERVICE.

No. 4066A.

No. 2376A.D.—The 5th September 1902.—Babu Kali Pada Chuckerbutty, Sub-Deputy Collector, is posted to the Bihar subdivision of the Patna district, and is vested with the powers of a Magistrate of the third class.

Patna.

No. 2406A D.—The 6th September 1902.—Babu Chandra Kumar Mathur, substantive *pro tempore* Sub-Deputy Collector, Angul, is transferred temporarily to the head-quarters station of the district of Cuttack.

Angul.
Cuttack.

No. 2408A D.—The 6th September 1902.—Maulvi Saiyad Tajammul Ali, Sub-Deputy Collector, Cuttack, is transferred temporarily to the head-quarters station of the district of Angul.

Cuttack.
Angul.

C. E. BUCKLAND,

Chief Secy. to the Govt. of Bengal.

REGISTRATION DEPARTMENT

No. 1036P.D.—The 6th September 1902.—Maulvi Syed Bashrat Karim Ahmad, Rural Sub-Registrar of Barh, in the district of Patna, is appointed to be Rural Sub-Registrar of Sitamarhi, in the district of Muzaffarpur.

Patna. Muzaffarpur.

No. 1037P.D.—The 6th September 1902.—Maulvi Syed Amir Asghar, Rural Sub-Registrar of Bihar, in the district of Patna, is appointed to be Rural Sub-Registrar of Barh, in the same district.

Patna.

C. E. BUCKLAND,
Chief Secy. to the Govt. of Bengal.

JAIL DEPARTMENT.

No. 10432, dated Calcutta, the 3rd September 1902.—Deputy Magistrate Babu Girindra Chundra Banerjee was in charge of the Ranchi District Jail from the afternoon of the 22nd to the forenoon of the 28th August 1902, during the absence of Captain R. H. Maddox, I.M.S.

JOHN MULVANY, CAPTAIN, I.M.S.,
for *Inspr.-Genl. of Jails, Bengal.*

CIVIL MEDICAL DEPARTMENT, BENGAL.

No. 2584D., dated the 6th September 1902.—Assistant Surgeon Upendra Nath Buxi, a supernumerary at the Medical College Hospital, Calcutta, is temporarily appointed to the Bhola Subdivision and Dispensary, in the Backergunge district.

No. 2588D, dated the 6th September 1902.—Assistant Surgeon Joy Krishna Gupta, of the Bhola Subdivision and Dispensary, Backergunge, is allowed privilege leave for 2 months and 24 days, under Article 291 of the Civil Service Regulations, with effect from the date on which he may avail himself of it.

T. H. HENDLEY, COL., I.M.S.,
Inspector-General of Civil Hospitals, Bengal.

NOTIFICATION.

Examination of Compounders at the Temple Medical School, Patna.

IN accordance with the Government of Bengal Notifications Nos. 4042Medl., dated 2nd November 1896, 337T.—M., dated 9th June 1897, and 288Medl., dated 17th January 1902, notice is hereby given that the next half-yearly examination of Compounders will be held at 10 A.M. on Monday, the 27th October 1902, at the Temple Medical School, Bankipore.

2 Every candidate must produce certificates of training, age, and previous education, as required by Rule 9 of Bengal Notification No. 4042Medl., dated 2nd November 1896, published in the *Calcutta Gazette* of the 4th November 1896, except in those cases provided for in Rule 10.

These certificates must comply with the conditions laid down in Rule 12 of the above resolution.

3. Male candidates must register their names and submit their certificates, together with a fee of Rs. 5, at least one week before the 27th October 1902 at the office of the undersigned.

Female candidates will be examined free of charge.

[*Exception.*—The students belonging to the Compounder class of a Vernacular Medical School will be exempted from paying this fee on producing a certificate from the Superintendent that they have already paid the school entrance fee.]

4. Should any candidate fail to pass the required examination, he will forfeit his fee.

5. Candidates will have to pass a test in English before being allowed to appear for the rest of the examination.

This test consists of reading and writing from dictation, the reading of prescriptions and labels.

They will, if successful, be then examined in Materia Medica, Pharmacy, the compounding and mixing of drugs, &c.

6. No candidate for the Compounder's Examination shall be permitted to appear for examination more than three times.

B. C. OLDHAM, CAPTAIN, I.M.S.,
Superintendent, Temple Medical School, Patna.

TEMPLE MEDICAL SCHOOL, BANKIPORE, *the 28th August 1902.*

NOTIFICATION.

Examination of Compounders at the Campbell Medical School.

In accordance with the Government of Bengal Notifications Nos. 4042Medl., dated 2nd November 1896, and 337T.—M., dated 9th June 1897, notice is hereby given that the next half-yearly examination of Compounders will begin at 11 A.M. on Monday, the 27th October 1902, at the Campbell Medical School.

2. Every candidate must produce a certificate of training and a certificate of age and previous education, as required by Rule 9 (*vide* Government of Bengal Notification No. 4042Medl, dated 2nd November 1896, published in the *Calcutta Gazette* of the 4th November 1896, and circulated by the Inspector-General of Civil Hospitals, Bengal, to all Civil Surgeons, Superintendents of Medical Schools, Lunatic Asylums and Calcutta Hospitals with his Circular No. 60, dated 5th December 1896).

3. Male candidates must forward to the Superintendent of the Campbell Medical School, at least one week before the 27th October 1902, an examination fee of Rs. 5. Female candidates will be examined free of charges.

4. Should any candidate fail to pass the examination, he will forfeit his fee.

5. No candidate for the Compounder's examination shall be permitted to appear for examination more than three times.

NOTE.—The attention of candidates is drawn to Rules 9, 10 and 12 (*a*) and (*b*), and of the persons granting the certificates to Rules 11 and 14 (3) and (4), and to the Certificate, Forms C and D, in the Schedule of the Government of Bengal's aforesaid Notification No. 4042Medl., dated 2nd November 1896.

J. C. S. VAUGHAN, M.B., EDIN., MAJOR, I.M.S.,
Offg. Supdt., Campbell Medical School.

CAMPBELL MEDICAL SCHOOL, CALCUTTA, *the 28th August 1902.*

TREASURY NOTICE.

UNCOVENANTED DEPUTY COLLECTOR BABU MURALIDHAR ROY CHOUDHARI is placed in charge of the Saran Treasury and is authorised to draw bills on other Treasuries.

E. F. GROWSE, *Offg. Commissioner.*

PATNA COMMR.'S OFFICE, BANKIPORE, *the 3rd September 1902.*

EDUCATION DEPARTMENT, BENGAL.

Subordinate Educational Service

The 20th August 1902.—Babu Nil Madhav Chakravarti, Head Clerk of the Patna College (Class IV), is allowed leave for two years, under Article 371 of the Civil Service Regulations, with effect from the 21st July 1902, or the date on which he availed himself of it.

Babu Hari Har Prasad Singh, Second Clerk of the Patna College, is appointed to act as Head Clerk of the same institution, and in Class VIII of the Subordinate Educational Service, during the absence, on leave, of Babu Nil Madhav Chakravarti, or until further orders.

The 1st September 1902.—Pandit Panday Ram Avatar Sarma, M.A., Sahityacharya, an Assistant Master in the Patna Collegiate School (Class VIII), is allowed leave of absence for two months, under Article 369 of the Civil Service Regulations, with effect from the date on which he may avail himself of it.

Babu Siva Nandan Ray, B A., is appointed to act as an Assistant Master in the Patna Collegiate School, and in Class VIII of the Subordinate Educational Service, during the absence, on leave, of Pandit Panday Ram Avatar Sarma, or until further orders.

The 3rd September 1902.—The following confirmations are sanctioned:—

(1) Babu Sarat Chandra Chakravarti, M.A., as Lecturer on Sanskrit in the Bethune College, and in Class VIII of the Subordinate Educational Service.

(2) Mrs. Saralabala Mitra, B.A., as Second Mistress of the Bethune Collegiate School, and in Class VIII of the Subordinate Educational Service.

The following arrangements are sanctioned:—

(1) Babu Shiva Nandan Sahai, B.A., an Assistant Master in the Muzaffarpur Zilla School (Class VII), to act as Assistant Head Master of the Purnea Zilla School, on the pay of his own grade, *vice* Maulvi Mir Sajjad Ali, who has applied for leave.

(2) Babu Dhanush Dhari Prasad, M.A., an Assistant Master in the Bihar School of Engineering (Class VIII), on leave, to act as an Assistant Master in the Muzaffarpur Zilla School, on the pay of his own grade, *vice* Babu Shiva Nandan Sahai.

Mr. A. Von Herrenkohe, Foreman Instructor of the Civil Engineering College, Sibpur, on probation (substantive *pro tempore* in Class III), will continue on probation for a further period of six months, with effect from the 3rd August 1902.

Babu Biresvar Chatterjea, an Assistant Master (Head Pandit) of the Calcutta Training School (Class VII), was absent on leave from the 7th July to the 31st August 1902, both days inclusive, under Article 306 (*b*) of the Civil Service Regulations.

The 3rd September 1902.—Babu Surendra Nath Banerjea, Head Clerk, office of the Inspector of Schools, Presidency Division (Class IV), is allowed leave for nine months, namely, three months under Article 291 of the Civil Service Regulations, with effect from the date on which he may avail himself of it, combined with furlough for the remaining period under Article 371 of the Regulations.

Babu Dharu Chandra Ghosh, Second Clerk, office of the Inspector of Schools, Presidency Division, is appointed to act as Head Clerk of the same office, and in Class VIII of the Subordinate Educational Service, during the absence, on leave, of Babu Surendra Nath Banerjea, or until further orders

The 5th September 1902.—Babu Rajendra Lal Gupta, B.A., Head Master of the Hooghly Branch School (Class III), is appointed to be Head Master of the Darjeeling High School, on the pay of his own grade, with effect from the date on which the latter school re-opens after the next Puja vacation, *vice* Babu Abinash Chandra Sen, transferred.

Babu Abinash Chandra Sen, B.A., Head Master of the Darjeeling High School (Class IV), is appointed to be Head Master of the Hooghly Branch School, on the pay of his own grade, with effect from the date on which the latter school re-opens after the next Puja vacation, *vice* Babu Rajendra Lal Gupta, transferred.

Babu Nilmani Pal, Head Master of the Malda Zilla School (Class II), is appointed to be Head Master of the Chaibassa Zilla School, on the pay of his own grade, with effect from the date on which the latter school re-opens after the next Puja vacation, *vice* Babu Hari Mohan Sen, transferred.

Babu Hari Mohan Sen, B.A., Head Master of the Chaibassa Zilla School (Class III), is appointed to be Head Master of the Malda Zilla School, on the pay of his own grade, with effect from the date on which the latter school re-opens after the next Puja vacation, *vice* Babu Nilmoni Pal, transferred.

The 5th September 1902.—Babu Bhagawan Chandra Mukherjea, a Sub-Inspector of Schools under the District Board of Backergunge (Class V), was granted by the Board privilege leave for two months and fifteen days, with effect from the 17th May 1902.

A. PEDLER,
Director of Public Instruction, Bengal.

Office Memorandum of the Inspector of Schools, Burdwan Division.

UNIVERSITY ENTRANCE EXAMINATION.

PRIVATE STUDENTS.

1. *Private students* are those who do not appear from any school or who have been transferred from one school to another after the 31st August without the consent of the Inspector. The term "private students" includes *school-masters*.

2. Private students must appear at the test examination of one of the following institutions:—

Those from the—	At the test examination of—	Date of test examination.
1	2	3
1. Howrah district ...	Howrah Municipal School ...	To be fixed by the Head Master.
2. Bankura " ...	Bankura Zilla School ...	15th December 1902.
3. Birbhum " ...	Birbhum ditto ...	15th " "
4. Midnapore " ...	Midnapore Collegiate School ...	18th " "
5. Hooghly " ...	Uttarpara Government School ...	15th " "
	Hooghly Branch School ...	15th " "
6. Burdwan " ...	Burdwan Raj Collegiate School (with the Principal's permission).	15th " "

The examinations will begin as stated above, and each private student will pay a fee of Rs. 2 to the head of the institution at which he appears for examination. The balance, after payment of expenses (stationery, etc.), will go as remuneration to the examiners. No private student will be admitted to the test examination unless accompanied, for the purpose

of identification, by some person known to the Head Master of the institution at which he appears.

3. Applications for permission to appear must be sent so as to reach *this office* not later than the 24th November, with the following information, etc.:—

(*a*) The name of the school in which the candidate last studied.
(*b*) The transfer certificate (in original) granted to the candidate from the same; or
(*c*) In the case of a candidate who previously appeared at the Entrance examination, the Registrar's receipt (in original) for the fee paid.
(*d*) Age of the candidate.
(*e*) In the case of school-masters, a certificate of good conduct from the Secretary or proprietor of the school in which the candidate is serving.

4. If this office is satisfied that all is in order, the Inspector will countersign and return the application, and this then will be the candidate's passport for admission *to the test examination.*

5. The Head Master of an institution (one of those named above) should direct private students to appear before him not later than the 11th January with their applications for admission to the Entrance examination, and in the case of those candidates who have satisfied the test, he will cause them to sign their application forms in his presence, and will grant the necessary certificates, and then forward the applications to this office for countersignature, after which they will be sent by the Inspector *direct* to the candidates.

6. Expedition is necessary in carrying out all these instructions, and candidates should be *most careful* to give their names and addresses, written legibly and distinctly, so that no mistake may be likely to occur.

7. *Under no circumstances should the entrance fee be sent to this office*, but it should be sent to the Registrar by the candidates themselves, together with the countersigned applications, which will be returned to the respective Head Masters for delivery to candidates.

8. Private students will understand that the test examination of any schools other than those named above will not be accepted by this office.

9. Addresses of private students should be supplied to this office.

10. The Entrance examination in 1903 will be held on the 2nd March 1903 and following days. Applications and fees for admission must reach the office of the Registrar on or before the 22nd January 1903.

F.A. AND B.A. EXAMINATIONS.

1. Deputy Inspectors of Schools, Sub-Inspectors of Schools, and *bonâ fide* masters of English schools, who have served as such for the full period of two academical years or of six months after the examination of the same class last held by the University in the case of those only who were admitted to a former examination of that class, will be admitted to the abovementioned examinations.

2. Candidates for the F.A. and B.A. examinations must produce certificates of character and length of service from the Secretaries of their respective schools, together with their *Entrance* or *F.A.* certificates. Those candidates who have been admitted to a former examination must produce the Registrar's receipt in addition.

3. The printed form of application should be carefully filled up and submitted to this office *on or before the 15th January 1903*, together with other papers as mentioned in rule 2, after which no applications will be received.

4. By *bonâ fide* masters of schools are to be understood masters who hold regularly paid appointments in English schools, teaching at least the M. E course.

5. The F.A and B.A. examinations in 1903 will be held on the 16th March 1903 and following days. The applications and fees for admission must reach the office of the Registrar on or before the 2nd February 1903.

CHINSURA,
The 3rd September 1902.

RADHA NATH ROY,
Inspector of Schools, Burdwan Division.

Office Memo. of the Inspector of Schools, Bhagalpur Division.

UNIVERSITY ENTRANCE EXAMINATION, 1903.

TEST-EXAMINATION OF PRIVATE STUDENTS.

1. A student who does not appear from any school, or who has been transferred since the 1st September next preceding the examination, without the consent of the Inspector, to the school from which he appears, will be treated as a private student.

2. All private students are required to appear at the test-examination of a zilla school. No private student will be admitted to the test-examination, unless accompanied, for the purpose of identification, by some person known to the Head Master.

3. The first day of the test-examination in all zilla schools in the Bhagalpur Division will be the 15th December 1902.

4. Each private student will have to pay a fee of Rs. 2 for permission to appear at the test-examination to the head of the institution at which he appears. The balance of fees, after payment of expenses (stationery, &c.), will go as remuneration to the examiners.

5. Candidates for the test-examination should apply to this office not later than the 8th November 1902. They should forward the certificates granted to them under the transfer rules by the Head Master of the school in which they last read. In the case of a candidate who had failed at a previous Entrance Examination and did not join a school afterwards, the Registrar's receipt, in original, will be accepted in lieu of the transfer certificate.

6. A student, who had failed to pass the annual examination for promotion to the first class at the end of session 1901-1902 and then left the school, cannot under any circumstances be allowed to appear at the Entrance Examination that will be held on the 2nd March 1903 and following days.

7. Each candidate should submit with his application a statement showing—

(1) Age.
(2) Residence.
(3) Father's name.
(4) Second language, besides English.
(5) Whether he appeared at any previous Entrance Examination.

8. *Bonâ fide* teachers employed in any of the recognised schools in the Bhagalpur Division may be admitted to the test-examination on payment of the prescribed fee, provided they can produce certificates of service and character from their employers, or from the Deputy Inspector of the district concerned.

9. The forms of application for permission to appear at the Entrance Examination will be signed by the Head Master of the zilla school at which the candidates have undergone the test, and will be forwarded by him to the Inspector for countersignature.

10. Applications and fees for admission to the Entrance Examination must be forwarded to the Registrar of the Calcutta University by the private candidates themselves, so as to reach his office on or before the 22nd January 1903.

F.A. AND B.A. EXAMINATION, 1903.

1. Deputy Inspector of Schools, Sub-Inspector of Schools, and *bonâ fide* teachers of recognised English schools, in the Bhagalpur Division of two years' standing, *i.e.*, who have served as such for full two academical sessions, or for six months in the case of those who were admitted to a former examination of the same class, will be admitted to the above examinations. These latter must have served for six months prior to the submission of their applications to the Inspector for countersignature. School-masters should produce certificates of character and length of service (with dates) from the Managers of the schools in which they are employed. Their applications must reach this office not later than the 5th January 1903.

2. Candidates for the B.A. Examination must forward with the applications their F.A. certificates, and those for the F.A. Examination their Entrance certificates.

3. Candidates should read carefully the certificate which this office will have to sign, and must be careful to supply all information and documents required, without which the Inspector must decline to sign it.

4. The F.A. and B.A. Examinations in 1903 will be held on the 16th March 1903 and following days.

5. Applications and fees for admission to the above examination must be forwarded to the Registrar, Calcutta University, by the candidates themselves so as to reach his office on or before the 2nd February 1903.

BHAGALPUR,
The 23rd August 1902.

P. CHATTERJEE,
Inspector of Schools, Bhagalpur Division.

Office Memorandum of the Inspector of Schools, Chota Nagpur Division.

UNIVERSITY ENTRANCE EXAMINATION, 1903.

TEST-EXAMINATION OF PRIVATE STUDENTS.

1. A student who does not appear from any school, or who has been transferred after the 31st August, without the consent of the Inspector, to the school from which he appears, will be treated as a private student. The term "private student" includes *School Masters.*

2. All private students are required to appear at the test-examination of a zilla school. No private student will be admitted to the test-examination, unless accompanied, for the purpose of identification, by some person known to the Head Master of the institution at which he appears.

3. The first day of the test-examination in all zilla schools in the Chota Nagpur Division will be the 15th December 1902.

4. Each private student will have to pay a fee of Rs. 2 for permission to appear at the test-examination to the head of the institution at which he appears. The balance of such fees, after payment of expenses (stationery, &c.), will go as remuneration to the Examiners.

5. Candidates for the test-examination should apply to this office not later than the 11th November 1902. They should forward the certificates granted to them under the transfer rules by the Head Master of the school in which they last read. In the case of a candidate who had failed at a previous Entrance Examination and did not join a school afterwards, the Registrar's receipt, in original, will be accepted in lieu of the transfer certificate.

6. A student who had failed to pass the annual examination for promotion to the first class at the end of session 1901-1902 and then left the school will not, under any circumstances, be allowed to appear at the Entrance Examination of 1903.

7. Each candidate should submit with his application a statement showing—

(1) Age.
(2) Residence.
(3) Father's name.
(4) Second language, besides English.
(5) Whether he appeared at any previous Entrance Examination.

8. *Bonâ fide* teachers employed in any of the recognised schools in the Chota Nagpur Division may be admitted to the test-examination on payment of the prescribed fee, provided they can produce certificates of service and character from their employers, or from the Deputy Inspectors of the districts concerned.

9. The forms of application for permission to appear at the Entrance Examination will be signed by the Head Master of the zilla school at which the candidates have undergone the test, and will be forwarded by him to the Inspector for countersignature.

10. The applications and fees for admission to the Entrance Examination must be forwarded to the Registrar of the Calcutta University by the private candidates themselves, so as to reach his office on or before the 22nd January 1903.

11. The Entrance Examination in 1903 will be held on the 2nd March 1903 and following days.

F.A. AND B.A. EXAMINATION, 1903.

1. Deputy Inspectors of Schools, Sub-Inspectors of Schools, and *bonâ fide* teachers of recognised English schools in the Chota Nagpur Division of two years' standing, *i.e.*, who have served as such for full two academical sessions, or for six months in the case of those who were admitted to a former examination of the same class, will be admitted to the above examinations. These latter must have served for six months prior to the submission of their applications to the Inspector for countersignature. School Masters should produce certificates of character and length of service (with dates) from the Managers of the schools in which they are employed. Their applications must reach this office not later than the 3rd January 1903.

2. Candidates for the B.A. Examination must forward with the applications their F.A. certificates, and those for the F.A. Examination their Entrance certificates.

3. Candidates should read carefully the form of the certificate which this office will have to sign, and supply all information and documents required, without which the Inspector will decline to sign it.

4. The F.A. and B.A. Examinations in 1903 will be held on the 16th March 1903 and following days.

5. Applications and fees for admission to the above examinations must be forwarded to the Registrar, Calcutta University, by the candidates themselves so as to reach his office on or before the 2nd February 1903.

M. GHOSE,
Inspector of Schools, Chota Nagpur Division.

PURULIA, *the 24th July 1902.*

NOTIFICATION.

IT is hereby notified for general information that upon the result of the ensuing Entrance Examination being known, the two second grade junior scholarships attached to the Chota Nagpur Division will be awarded to the two boys who stand highest in the divisional list irrespective of the districts they come from, and the five third grade junior scholarships will be distributed as follows:—

Hazaribagh	... 1	Palamau	... 1
Ranchi	... 1	Manbhum	... 1
Singhbhum	... 1		

F. A. SLACKE, *Offg. Commissioner of Chota Nagpur.*

CAMP PURULIA, *the 1st September 1902.*

NOTIFICATIONS OF THE BOARD OF REVENUE.

No. 2229B.

NOTICE is hereby given that the Tenth Sale of Opium, the Provision of 1900-1901, will be held at the Government Opium Sale-room, No. 2 Bankshall Street, on Monday, the 29th September 1902, at 11 A.M., and will comprise 4,000 chests, viz:—

	Chests.
Opium manufactured at the Patna Factory, consisting of	2,000
Ditto ditto at the Ghazipur Factory, consisting of ...	2,000
Total ...	4,000

2nd.—The general conditions of the sale now advertised will be the same as usual. They may be ascertained by reference to the Notification issued on the 19th November 1901, and published in the *Government* and *Exchange Gazettes*, or on personal application at the Office of the Board of Revenue.

3rd.—The latest dates for deposit and clearance will be the 4th and 14th October 1902, respectively, that is to say, no Bank of Bengal Receipts, Government Promissory Notes, or other public securities that may be tendered for deposit in redemption of Promissory Notes given by purchasers in the sale-room will be received after 1-30 P.M of Saturday, the 4th October 1902, and no Bank of Bengal Receipts in full payment of lots will be accepted after 3-30 P.M. of Tuesday, the 14th October 1902.

4th.—In addition to the quantity above advertised for sale, the following quantities, more or less, of the opium manufactured at the Patna and Ghazipur Factories will be brought to sale down to December next, on or about the dates specified below. The Board of Revenue, however, reserve to themselves the right of altering these dates, should circumstances render it expedient to do so:—

DATES.	Manufactured at the Patna Factory; about chests.	Manufactured at the Ghazipur Factory; about chests.	Total; about chests.
On or about Monday, 3rd November 1902 ...	2,000	2,000	4,000
On or about Monday, 1st December „ ...	2,000	2,000	4,000
Total ...	4,000	4,000	8,000

By order of the Board of Revenue, L. P.,

H. WHEELER, *Secretary.*

BOARD OF REVENUE, L. P., CALCUTTA, *the 25th August 1902.*

CUSTOM HOUSE NOTICES.

DURGA AND LAKSHMI PUJAS.

THE holidays to be observed in offices under the Government of Bengal are from Monday, the 6th, to Friday, the 17th, October, inclusive.

The Custom House and its Treasury will, however, be open during that period for the usual hours, except from Wednesday, the 8th, to Saturday, the 11th, and on Thursday, the 16th, and Friday, the 17th, October. On these dates it will be open free of charge from 11 A.M. to 12 noon for entering and clearing vessels and for the issue of bills of entry and shipping bills for free goods from or to such vessels, provided notice has been given by the agents concerned on the last preceding open day. The Treasury will, however, remain closed on these days.

L. F. MORSHEAD, *Offg. Collector of Customs.*

CALCUTTA CUSTOM HOUSE, *the 2nd September 1902.*

To prevent the repetition of certain frauds which have been committed upon the Custom House, it is notified that in future—

1. Bills of entry or shipping bills should invariably be presented by the Sircars who have signed them, and their signatures should have been countersigned, as they already are in many instances, by a representative of the firm or party for whom they are authorised to appear.

2. All entries relating to—

   (*a*) the number of packages or the like in which the goods are contained,
   (*b*) their *total* value in the column applicable,

should be entered in both words and figures; and the entry in words should have "only" written at the end of it, whilst both words and figures should be written sufficiently clearly and closely together to make any subsequent alteration easily discernible. The name of the firm or party for whom the goods are being cleared should also be entered in the last column of the forms unless shown already elsewhere on them.

L. F. MORSHEAD, *Offg Collector of Customs.*

CALCUTTA CUSTOM HOUSE, *the 5th September 1902.*

Statement showing the Quantity of Salt (Private Property) in Bonded Warehouses and Afloat on the River Hooghly on the 31st day of August 1902, and Transactions during the half-month from the 16th to the 31st August 1902.

DESCRIPTION OF SALT.	IN BONDED WAREHOUSES IN CALCUTTA.				Quantity afloat.	Grand Total.	TRANSACTIONS DURING HALF-MONTH FROM THE 16TH TO THE 31ST AUGUST 1902, INCLUSIVE.			
	In private golas.	In Sulkea Government golas.	In Kidderpore Dock Government golas.	Total.			Quantity on which duty has been paid.	Manifested quantity arrived in the Port of Calcutta.	Deliveries from shipboard for consumption and for inland bonded warehouses.	Deliveries from bonded warehouses for consumption and for inland bonded warehouses.
1	2	3	4	5	6	7	8	9	10	11
		Mds.	Mds.	Mds.	Mds.	Mds.	Mds.	Mds.	Mds.	Mds.
United Kingdom—										
Liverpool and other Panga salt.	.....	7,01,112	6,14,843	13,15,955	20,592	15,36,547	1,37,339	2,48,436	75,567	1,21,046
Other European countries—										
Hamburg salt	.....	78,446	.....	78,446	2,720	81,166	43,100	27,735	11,900	27,700
Aden and Red Sea—										
Aden salt	.....	2,39,734	10,836	2,50,750	1,43,254	3,93,824	49,080	1,82,389	.....	45,252
Salif salt	.....	3,05,442	.....	3,05,442	.....	3,05,442	44,730	.....	7,000	36,480
Salif rock salt	.....	6,365	.....	6,365	.....	6,365	1,400	.....	.....	1,860
Rawayah salt	.....	1,23,656	70,320	1,93,976	1,03,200	2,97,176	55,545	1,48,496	24,050	20,070
Muscat and Persian Gulf—										
Muscat, Lingah and Hanjam salt.	.....	1,33,051	.....	1,33,051	.....	1,33,051	2,000	.....	.....	2,000
Ditto ditto Rock salt.	.....	6,517	.....	6,517	.....	6,517	.....	.....	.....	400
British India—										
Bombay salt	.....	1,55,857	.....	1,55,857	.....	1,55,857	80,008*	.....	.....	22,418
Madras salt	.....	.....	.....	.....	.....	.....	.....	.....	.....	.....
Cocanada salt	.....	.....	.....	.....	.....	.....	.....	.....	.....	.....
Vizagapatam salt	.....	.....	.....	.....	.....	.....	.....	.....	.....	.....
Other places—										
Port Said	.....	1,03,420	.....	1,03,420	.....	1,03,420	2,290	.....	.....	2,610
Total ...	.....	18,53,600	8,95,999	27,49,599	2,69,766	30,19,365	3,65,492	6,07,056	1,17,817	2,81,776

* This quantity includes 29,281 maunds Bombay Karkach salt on which duty was paid at Bombay.

By order of the Board of Revenue, L. P.,

L. F. MORSHEAD, *Offg. Collector of Customs.*

CALCUTTA CUSTOM HOUSE, *the 9th September 1902.*

ELECTION OF MUNICIPAL COMMISSIONERS.

NOTIFICATION.

IT is hereby notified for general information that, under Rule 21 (*b*) of the Dispensary Manual, Babu Manaranjan Mukerjee has been appointed a member of the Managing Committee of the Charitable Dispensary at Chandkhali, in the district of Khulna, *vice* Babu Sharada Prosad Roy, resigned.

M. FINUCANE, *Commissioner.*

COMMR.'S OFFICE, PRESY. DIVN., CALCUTTA, *the 4th September 1902.*

NOTIFICATION.

IT is hereby notified for general information that, under Rule 21 (*b*) of the Dispensary Manual, the following gentlemen have been appointed members of the Committee for the management of the Vincent Charitable Dispensary at Kaligunge, in the district of Khulna. This notification supersedes all previous notifications on the subject:—

1. The Subdivisional Officer, Satkhira, *ex-officio* Chairman.
2. The Civil Medical Officer, Khulna.
3. The Rural Sub-Registrar, Kaligunge, Secretary.
4. The Senior Sub-Inspector of Police, Kaligunge.
5. Babu Umesh Chandra Banerjee.
6. „ Rajendra Nath Chatterjee.
7. „ Hari Pado Chatterjee.
8. „ Akhoy Kumar Basu.
9. „ Baroda Charan Mukerjee.

M. FINUCANE, *Commissioner.*

COMMR.'S OFFICE, PRESY. DIVN., CALCUTTA, *the 4th September 1902.*

NOTIFICATION.

IT is hereby notified for general information that, in exercise of the powers conferred on me by section 41 of the Bengal Local Self-Government Act, III (B.C.) of 1885, I appoint Wazuddin Mondal to be a member of the Jadurhati Union Committee, in the Basirhat subdivision of the district of the 24-Parganas, in the place of Munshi Mondal, deceased.

C. J. STEVENSON-MOORE, *Offg. Commissioner.*

COMMR.'S OFFICE, PRESY. DIVN., CALCUTTA, *the 8th September 1902.*

The Calcutta Gazette.

WEDNESDAY, SEPTEMBER 10, 1902.

PART IA.

Orders and Notifications by the Government of India, &c.

[*Reprinted from the "Gazette of India."*]

MILITARY SECRETARY'S OFFICE.

NOTIFICATIONS.

Simla, the 4th September 1902.

No. 802M.—Notice is hereby given that His Excellency the Viceroy and Governor-General will hold a Levée at Calcutta on Monday, the 15th December 1902, at 9-30 P.M., for Officers and Gentlemen possessing the privilege of the Private Entrée and for New Presentations only. As Government House will not be open till after the Delhi Darbar, this Levée will be held in the Town Hall, and will take the place of the two ordinary Levées held annually. Those Officers and Gentlemen who have been presented before and would attend in the ordinary course will be excused from attendance in the present year. The sole exception to this exemption will be the Officers and Gentlemen who possess the privilege of the Private Entrée.

The following regulations are to be observed at His Excellency's Levée:

I.—Gentlemen on the Private Entrée List are requested to send their cards addressed *to the Office of the Military Secretary to the Viceroy, Calcutta*, not later than Monday, the 8th December 1902, and are also requested to bring with them two large cards with their names clearly written thereon,—one to be left with the Aide-de-Camp in waiting in the corridor, and the other to be delivered to the Military Secretary to the Viceroy, who will announce the name to His Excellency.

II.—Gentlemen who have not already been presented at the Court of St. James or at the Viceregal Court should send in their names and addresses, through the Gentlemen who propose to present them *to the Office of the Military Secretary to the Viceroy, Calcutta*, not later than *Monday, the 24th November 1902*, in order that the names may be submitted to His Excellency, when, if they are approved, Presentation cards will be forwarded.

Gentlemen presenting others, except those who possess the privilege of the Private Entrée, will not be required to attend.

Gentlemen wearing uniform will appear in Full Dress; Gentlemen not wearing uniform in Evening Dress.

With regard to further particulars as to dress, attention is invited to the Notification issued from this Office, No. 904M., dated 8th September 1899, published in the *Gazette of India* of the 9th idem.

The 5th September 1902.

No. 808M.—Notice is hereby given that their Excellencies the Viceroy and Lady Curzon will not hold this year the Drawing Room annually held at Government House, Calcutta, it having been found impossible to arrange for this function in the interval between the close of the Delhi ceremonials and the State Fancy Dress Ball, which it is proposed to give at Government House on 26th January 1902.

Applications for new presentations will, however, be received and considered in the ordinary course. Ladies who propose to present others must send in *in writing* for approval the names of such Ladies *to the Office of the Military Secretary to the Viceroy, Calcutta,* not later than Thursday, the 15th January 1903, after which date no applications will be received. These applications will be submitted to their Excellencies, and if they are approved, Presentation cards will be forwarded.

The Ladies who will thus receive Presentation cards will be considered to have been presented at their Excellencies' Drawing Room.

By Command,
EVERARD BARING, *Lieut.-Colonel,*
Military Secretary to the Viceroy.

The following order, issued by the Government of India in the Legislative Department, is republished for general information.

C. E. BUCKLAND,
Chief Secy. to the Govt. of Bengal.

NOTIFICATION.

Simla, the 5th September 1902.

No. 14.—In exercise of the power conferred by section 10 of the Indian Councils Act, 1861 (24 and 25 Vict., c 67), and section 1 of the Indian Councils Act, 1892 (55 and 56 Vict., c. 14), the Governor-General is pleased to nominate the Hon'ble Robert Fulton Rampini, I.C.S., Barrister-at-Law, a Puisne Judge of the High Court of Judicature at Fort William in Bengal, to be an Additional Member of the Council of the Governor-General for the purpose of making Laws and Regulations.

J. M. MACPHERSON,
Secy. to the Govt. of India.

The following orders, issued by the Government of India in the Home Department, are republished for general information.

C. E. BUCKLAND,
Chief Secy. to the Govt. of Bengal.

POLICE.

The 5th September 1902.

No. 691.—The services of Mr. A. T. Halliday, Assistant Superintendent of Police, Bengal, are placed at the disposal of the Hon'ble the Chief Commissioner of Assam.

H. H. RISLEY,
Offg. Secy. to the Govt. of India.

The following order, issued by the Government of India in the Revenue and Agricultural Department, is republished for general information.

C. E. BUCKLAND,
Chief Secy. to the Govt. of Bengal.

(PRACTICAL ARTS AND MUSEUMS.)

The 5th September 1902.

No. 3031—33-21.—Babu Chandra Bhusan Bhaduri, B.A., Demonstrator of Chemistry at the Presidency College, Calcutta, is appointed, with effect from the forenoon of the 21st August 1902, to the charge of the current duties of Curator, Economic Section, Indian Museum, during the absence of Mr. D. Hooper, on deputation.

J. O. MILLER,
Offg. Secy. to the Govt. of India.

The following order, issued by the Government of India in the Foreign Department, is republished for general information.

C. E. BUCKLAND,
Chief Secy. to the Govt. of Bengal.

NOTIFICATION.

The 3rd September 1902.

No. 1421G.—With the sanction of His Majesty's Government, the Governor-General in Council is pleased to recognise provisionally the appointment of Monsieur A. deKoster as Consul for the Netherlands at Calcutta.

The 4th September 1902.

No. 1436-G.—Mr. E. V. Gabriel, of the Indian Civil Service, an Officiating Political Assistant of the 1st class, is posted, on return from privilege leave, as an Assistant to the Governor-General's Agent in Central India.

H. S BARNES,
Secy. to the Govt. of India.

The following order issued by the Government of India in the Finance and Commerce Department is republished for general information.

C. E. BUCKLAND,
Chief Secy. to the Govt. of Bengal.

NOTIFICATION.

PENSIONS AND GRATUITIES.
FUND.

Simla, the 20th August 1902.

INDIAN CIVIL SERVICE FAMILY PENSION REGULATIONS.

No. 4528-P.—The following is published for general information:—

No. 4 Financial (Funds), dated India Office, London, the 25th July 1902.

From—His Majesty's Secretary of State for India,
To—His Excellency the Right Hon'ble the Governor-General of India in Council.

I FORWARD herewith a Report and Abstract of a Valuation* made by Mr. Willis Browne, F.I.A., of the assets and liabilities under the Indian Civil Service Family Pension Regulations, as at the 30th September 1898, together with observations thereon† by Mr. Stanley Day, F.I.A.

Indian Civil Service Family Pension Regulations—third quinquennial valuation of—
* Dated 24th February 1902 (12 copies sent).
† Dated 1st July 1902.

2. Your Excellency in Council will observe that Mr. Willis Browne has made two valuations—one at the rate of 3½ per cent., showing a deficit of 153·590*l*, and the other showing a surplus of 21,191*l*., at the rate of 4½ per cent. Both valuations have been made on the supposition of a return to the full rates of subscription, which were reduced by 27½ per cent. as a temporary measure and until the present occasion, as indicated in my Despatch dated the 2nd of April 1896.

3. Having regard to the observations made by me in the Despatch dated 17th May 1901, No. 3, with reference to the recent valuation of the Indian Military Service Family Pensions, I am willing to adopt, until the next valuation, the 4½ per cent. rate of interests but it is necessary that the temporary reduction of subscriptions by 27½ per cent. only allowed in paragraph 6 of my Despatch No. 2, dated the 2nd of April 1896, until this valuation, should at once be withdrawn, and that the original rates be restored with effect from the beginning of the month following the date of the publication of this Despatch in the *Gazette of India*, which date should be communicated to me by telegram.

4. The consolidated accounts for the five years ending the 30th of September 1898 are also transmitted.

ENCLOSURES.

ENCLOSURE No. 1.

INDIAN CIVIL SERVICE FAMILY PENSIONS.

Agreeably to instructions issued by the Secretary of State for India in Council, I attach hereto an abstract of a valuation, at 30th September 1898, of the assets and liabilities of this Fund at 3½ per cent. interest; and the result, as was to be expected, is a very considerable deficit.

Before remarking on the effect of a reduction of interest, I should furnish certain statistics, generally looked for, relating to the personal state of the Fund, and to rates of mortality, marriage, &c, now obtaining.

The personal state of the Fund compares with that at the date of the last valuation as follows:—

	30TH SEPTEMBER 1893. DATE OF LAST VALUATION.			30TH SEPTEMBER 1898. DATE OF PRESENT VALUATION.		
	Number of married officers.	Number of unmarried officers.	Total.	Number of married officers.	Number of unmarried officers.	Total.
Class II ...	None	None	None	46 (including 1 widower).	12	58
„ III ...	7	9	16	58	20	78
„ IV ...	59	66	125	93 (including 3 widowers).	108	201
„ V ...	31	226	257	64 (including 1 widower).	248	312
Total ...	97	301	398	261	388	649

The number of married officers represents between 39 and 40 per cent. of the total number of subscribers as against a number representing between 24 and 25 per cent. at the date of the last valuation; and the percentages of married members compare with those obtaining five years before in the following manner:—

	At date of last valuation. Percentage of married to total number of subscribers in Class.	At date of present valuation. Percentage of married to total number of subscribers in Class.
Class II ...	No officers in Class II	... About 79 per cent.
„ III ...	About 44 per cent.	... „ 74 „
„ IV ...	„ 47 „	... „ 46 „
„ V ...	„ 12 „	... „ 20 „

It will be observed that the above percentages are high.

Of the 255 married officers with wives living—

1	contracted marriage at an age	between	20 and 21	...	Last Valuation	0
5	„	„	21 and 22	...	„	4
10	„	„	22 and 23	...	„	6
28	„	„	23 and 24	...	„	18
33	„	„	24 and 25	...	„	16
39	„	„	25 and 26	...	„	12
35	„	„	26 and 27	...	„	14
25	„	„	27 and 28	...	„	11
21	„	„	28 and 29	...	„	5
14	„	„	29 and 30	...	„	4
7	„	„	30 and 31	...	„	1
12	„	„	31 and 32	...	„	2
11	„	„	32 and 33	...	„	4
5	„	„	33 and 34	...	„	...
6	„	„	34 and 35	...	„	..
1	„	„	35 and 36	...	„	...
1	„	„	36 and 37	...	„	...
1	„	„	37 and 38	...	„	...

Of the same 255 married officers, the following numbers have completed the years of married life enumerated as under:—

Years of married life completed.	No. of officers.
0	33
1	40
2	32
3	25
4	29
5	22
6	13
7	15
8	9
9	17
10	7
11	4
12	3
13	4
14	1
15	1
	255

It will be noticed that very many of the marriages occur at, or in the early years following, the date of entering into the service of the Government of India. The officer's position being assured at a comparatively young age, and the financial obstacles that ordinarily thwart youthful marriages being thereby removed, it would appear that he does not hesitate to accept, in early life, the responsibilities of matrimony.

The membership of the Fund is yet small, and the experience governing the rates of mortality, marriage, &c., must, in consequence, be accepted *cum grano salis*. In other words, the experience should be accepted, not as applicable in its entirety, but rather as an indication of the probable future. In some instances, so far as it goes, it diverges in a considerable degree from the experience upon which the Fund was built. In the following statements I give the rates originally adopted, together with those I have considered

desirable to adopt for the purposes of the present valuation; the reasons governing my conclusions being also given.

Mortality Rates—Officers.

1st January 1899.

No. of officers entered		774
,, ,, over all years under observation ...		6,115
,, withdrawals		11
,, deaths		56
,, over all years exposed to death risk ...		5,725

From the above the following rates of mortality are obtained:—

Age.	Rate.	Age.	Rate.
19	·0109	26	·0103
20	·0108	27	·0102
21	·0107	28	·0102
22	·0107	29	·0101
23	·0106	30	·0101
24	·0105	31	·0100
25	·0104		

After the age of 31, the experience is too small to be considered reliable.

The above rates compare with those originally adopted, and with the others shown below, in the following manner:—

Age.	Civil experience, 1st January 1899.	Latest adopted rates for Indian Military Fund.	General Hannyngton's original rates for Civil.	Mr. Sutton's Bengal Civil.
19	·0109	.....	.....	.....
20	·0108	·0178	·0118	.....
21	·0107	·0194	·0131	.....
22	·0107	·0174	·0141	.....
23	·0106	·0157	·0145	·0100
24	·0105	·0142	·0149	·0108
25	·0104	·0132	·0154	·0112
26	·0103	·0123	·0156	·0116
27	·0102	·0117	·0159	·0116
28	·0102	·0118	·0161	·0116
29	·0101	·0119	·0166	·0122
30	·0101	·0120	·0169	·0129
31	·0100	·0122	·0172	·0136
32	.....	·0125	·0177	·0136
33	.....	·0128	·0180	·0140
34	.....	·0131	·0183	·0142
35	.....	·0134	·0187	·0145
36	.....	·0136	·0191	·0147
40	.....	·0144	·0216	·0152
45	.....	·0166	·0269	·0161
50	.....	·0204	·0261	·0190
55	.....	·0255	·0255	·0237
60	.....	·0326	·0326	·0299
65	.....	·0469	·0469	·0395
70	.....	·0684	·0684	·0537
75	.....	·1026	·1026	·0864
80	.....	·1522	·1522	·1509

The existing rates, so far as they go, are considerably lower than the original rates, and are also lower than those I deduced from the Military Fund experience. They are nearer to the rates found by the late Mr. Sutton on the experience of the Bengal Civil Fund; but even compared with the latter, the present experience shows a marked improvement. It is true Mr. Sutton based his rates on a wider experience than mine, and weight must be given to this fact

There is little doubt that the lives of our Indian Civil Officers have, in the same manner as those of other select classes, very considerably improved; and the present experience, small as it is, will probably prove hereafter to be correct at the ages given with a like improvement at other ages. Considering, however, the question generally, and with a due regard to the wisdom of providing a sufficient margin against the unexpected, I have, for the purposes of this valuation, adopted the rates obtained by the late Mr. Sutton, with the exception of the five or six younger ages for which I have accepted the existing experience at this date.

Marriage Rates—Officers.

1st January 1899.

Number entered unmarried	774
„ over all years under observation	4,771
Exits by death and otherwise	51
Number of marriages	288
„ over all years subject to marriage	4,359

On the above data, the following rates are deduced according to years of service, and compare with those of the Indian Military Service, and with those of the Bengal Civil Fund as under. In the original scheme, the late General Hannyngton had no occasion for the use of marriage rates, as no potential assets or liabilities were accounted for, the reason for this omission being explained by that officer at the time :—

Service, years.	Military Fund experience.	Sutton's Bengal Civil.	Civil Fund experience to date.
0	·0200	·0770	·0573
1	·0200	·0780	·0650
2	·0250	·0790	·0725
3	·0350	·0800	·0850
4	·0450	·0850	·0900
5	·0550	·0900	·0950
6	·0600	·0950	·1000
7	·0650	·1000	·1050
8	·0700	·1050	·1100
9	·0750	·1150	·1200
10	·0800	·1300	·1350
11	·0850	·1500	·1500
12	·0900	·1300	·1400
13	·0900	·1150	·1200
14	·0850	·1100	·1100
15	·0850	·1000	·1000

The rates now deduced being, for the years of service given, based on a fairly wide experience, there is no reason why they should be rejected. With the exception of the first two years of service, they approach very nearly to the Bengal Civil Fund rates found by the late Mr. Sutton. Towards the end of the present experience, the rates founded thereon and those of the Bengal Civil are practically the same. Thus I have, for the years of service beyond the range of the present experience, followed on with the rates determined by Mr. Sutton.

Mortality Rates—Wives of Officers.

1st January 1899.

Number entered	284
„ over all years under observation	1,604
„ of exits	14
„ of deaths	6
„ over all ages subject to death	1,436

From the above, the following death-rates are obtained :—

Ages 20 to 24 inclusive. Average rate of ·0073 at each age.
„ 25 to 29 inclusive. Average rate of ·0032 at each age.
„ 30 to 34 inclusive. Average rate of ·0033 at each age.

The experience of the Fund is so limited that I hardly feel justified in accepting existing facts as a guide to the future. As, however, it would be very unsafe to assume higher death-rates than are likely to prevail hereafter, some consideration should undoubtedly be given to the low rates foreshadowed by the present experience, notwithstanding the scanty data upon which it is based. I propose, therefore, with a view to safety, to accept as applicable to the future such portions of the tables I have before me as show the lowest rates. I produce the following tables for consideration. The table used by the late Mr. Sutton for the Bengal Civil Fund was that constructed on the very old data collected by the late Mr. Samuel Brown, Mr. Sutton presumably being of opinion that the experience of the Bengal Civil Fund at his disposal at the time was not sufficiently extensive to warrant acceptance. The rates adopted by General Hannyngton as under are those prepared by the late Mr. Davies on the Madras experience, as modified for the

Bengal Military Fund. The experience is of very old date, and by no means suitable to existing circumstances—

Age.	General Hannyngton's Civil.	Indian Military Fund.	Institute of Actuaries' Hm. Table.
16	·0099	·0130	·0071
17	·0099	·0120	·0071
18	·0101	·0110	·0069
19	·0103	·0102	·0067
20	·0103	·0102	·0069
21	·0103	·0102	·0073
22	·0105	·0102	·0079
23	·0105	·0102	·0088
24	·0108	·0102	·0098
25	·0108	·0108	·0108
26	·0110	·0110	·0114
27	·0112	·0103	·0118
28	·0117	·0103	·0120
29	·0124	·0103	·0120
30	·0130	·0104	·0119
31	·0137	·0106	·0117
32	·0144	·0108	·0106
33	·0146	·0110	·0117
34	·0153	·0110	·0117
35	·0158	·0110	·0118
36	·0164	·0110	·0110
37	·0167	·0100	·0120
38	·0178	·0085	·0122
39	·0180	·0080	·0123
40	·0189	·0080	·0125
41	·0198	·0080	·0127
42	·0203	·0080	·0129
43	·0214	·0080	·0132
44	·0219	·0089	·0134
45	·0230	·0091	·0136
46	·0237	·0103	·0138
47	·0241	·0125	·0139
48	·0248	·0128	·0140
49	·0261	·0133	·0142
50	·0268	·0137	·0145
51	·0284	·0142	·0150
52	·0290	·0146	·0156
53	·0302	·0151	·0164
54	·0311	·0158	·0174
55	·0319	·0164	·0183
56	·0331	·0171	·0191
57	·0342	·0178	·0199
58	·0353	·0187	·0207
59	·0366	·0194	·0218
60	·0382	·0204	·0237
61	·0395	·0218	·0259
62	·0413	·0236	·0285

Government Annuitants.

Up to the age of 24, I have accepted the rates of the Institute of Actuaries' Hm Table as being nearer to the rates indicated by the present experience. For ages from 25 to 46 inclusive, I have adopted the rates I recently found to obtain on the experience of the Indian Military Fund. After the age of 46 I have followed on with the Government Annuitants' rates, the same as I did for the Military Fund. The table of rates thus selected affects the valuation adversely. But to use the original high rates would be to under-value the liability for widows' pensions, and to thereby hide a disease which, if allowed to continue long without proper treatment, can only be cured by the adoption of very strong measures, such as a large increase of subscription.

Mortality Rates—Daughters.

1st January 1899.

Number entered	183
„ over all ages exposed to risk	807
„ of exits	1
„ of deaths	13

The death-rates based on the above data are:

For age 0	·0656
„ 1	·0071

The ages of those exposed to risk range from 0 to 14 years. Of the 13 deaths 12 occurred at age 0 (nearest), and one at age 1 (nearest). After the age of 1 (nearest) no

deaths have occurred. The experience, however, is too small to be accepted. Nevertheless it indicates that the rates of mortality will, as in the case of daughters of military officers, fall very considerably below those hitherto in use; and I have, in consequence, for the purposes of this valuation, accepted the rates I used in connection with the last valuation of the Indian Military Service Family Pension Fund. These rates have a very adverse effect on the results of the valuation. The remarks I made on the same subject in connection with the wives of officers are also applicable here.

Marriage Rates—Daughters.

There are no daughters who have yet attained an age at which marriage occurs. In the case of the Indian Military Service Family Pension Fund, the recent experience proved to be very disappointing, the rates being nothing like as high as those assumed in the original scheme; and I had, in consequence, to adopt reduced rates in the valuation. In the case of the Civil Fund, however, for which I have no very recent experience, I should not, I think, be justified in rejecting the rates assumed by the late General Hannyngton or those found by the late Mr. William Sutton, the two being very nearly in accord; more especially as I have good reasons for believing that opportunities for desirable marriages occur much more frequently in the Indian Civil than in the Indian Military Service. Mr. Sutton's data being the more recent, I have selected the rates found by that actuary.

Mortality Rates—Sons.

Number entered	169
,, over all ages exposed to risk	813
,, of deaths	15

All the 15 deaths occurred between birth and age 2 (nearest). The same remarks apply as in the case of daughters, and I have in like manner selected the rates I found for the Military Fund.

Reference has, on a previous occasion, been made to the necessity of introducing into the valuation the estimated value of potential assets and liabilities in the following circumstances:—

(1) A reduction in the rate of interest.
(2) Any considerable adjustment of the life tables.

These potential assets and liabilities have reference to the future families of bachelors, etc., and to the additional children of existing married officers. So long as the original rate of interest is continued, and the original tables remain applicable, so long may it be considered unnecessary to deal with matters outside existing and contingent claims, because every new liability brings with it a corresponding asset. On a reduction of interest, however, or on the introduction of some other disorganising element, new assets do not correspond with new liabilities, the latter being greater than the former; and as this loss is continuous, applying, as it does, to every possible claim that can arise, it becomes necessary to value all the assets and liabilities that can be created by existing subscribers, married or single. By so doing, the valuation becomes extended to a period far beyond the range of contingent liabilities; and the results, in consequence, when compared with those of earlier valuations, where potential values have been omitted, may possibly assume an appearance of inconsistency unless the figures are closely examined into. Moreover, on the introduction of either of the changes alluded to, the calculations on which are estimated the aid to be derived from unmarried subscribers become vitiated, the amount in excess of what is required during the Fund's infancy, and which we have spent by allowing a reduction of subscription, being swamped by the loss sustained at the fag end of the period pertaining to existing subscribers. This excess amount received in the earlier years having been spent on the assumption of a continuation of the original tables and interest rate, there is nothing left to make good the loss incurred at the end of period unless the scale of contributions be so increased as to fully counteract the effect of the changes introduced. In the original scheme it was assumed that there would exist indefinitely a certain proportion of bachelor members from whom, at a given rate of interest, an annual sum would be derived sufficient to supply the deficiency in the required amount of married member's subscription for children. By this assumption, if the interest rate be reduced, we trespass upon future subscribers to make good a loss now being contracted. But in the event of the Fund being closed, or, which is the same thing, new conditions be made for new entrants, the revenue from this source is, *de facto*, at once cut off; and it will thus be understood that the result of a valuation, excluding potential claims, must be of a very misleading character, since the capital, which is included therein as an asset, is not wholly the property of incumbent and contingent pensioners, but forms, in great part, within the limit of unmarried subscription, the nucleus of a reserve for future children of both married and unmarried subscribers.

Thus it becomes essential to include in the account the value of potential assets and liabilities, and to adjust the scale of contributions accordingly.

The deficit at a 3½ per cent. rate of interest amounts to 153,590*l.*, representing about 12½ per cent. of the total liabilities. To extinguish this deficit, the full contributions all round would have to be increased by 16 per cent.

The valuation at 4½ per cent. interest shows a surplus of 21,191*l.*, representing about 2 3 per cent. of the total value of the liabilities.

Both valuations have been made on the supposition of full rates of contribution.

24th February 1902. WILLIS BROWNE.

Annexe 1.

INDIAN CIVIL SERVICE FAMILY PENSIONS.

VALUATIONS AS AT 30TH SEPTEMBER 1898.

Interest 3½ per cent.

Assets.	£	*Liabilities.*	£
Capital	115,242	Incumbent.—Widows (including re-married widow).	27,225
Contributions—		Daughters ...	3,911
Existing wives	273,505	Sons	3,817
„ daughters	24,289	Contingent.—Wives (including re-married widow).	362,338
„ sons	9,473	Daughters ...	39,583
Future wives of bachelors and widowers—next marriages.	309,698	Sons	11,195
Future wives of bachelors and widowers—subsequent marriages	21,880	Potential.—Future wives of bachelors and widowers—next marriages.	367,261
Future wives of married officers ...	21,753	Future wives of bachelors and widowers—subsequent marriages.	28,762
Future children of bachelors and widowers—next marriages. / Future children of bachelors and widowers—subsequent marriages	129,311	Future wives of married officers.	23,698
Future children of married officers by existing wives. / Future children of married officers by future wives.	100,335	Future children of bachelors and widowers—next marriages / Future children of bachelors and widowers—subsequent marriages.	180,854
Unmarried subscriptions ...	68,429	Future children of married officers by existing wives. / Future children of married officers by future wives.	140,329
Outstanding contributions ...	2,438	Management charges	35,968
	1,076,351		
Deficit ...	153,590		
	1,229,941		1,229,941

Annexe 2.

INDIAN CIVIL SERVICE FAMILY PENSIONS.

VALUATIONS AS AT 30TH SEPTEMBER 1898.

Interest 4½ per cent.

Assets.	£	*Liabilities.*	£
Capital	115,242	Incumbent.—Widows (including re-married widow).	21,892
Contributions—		Daughters ...	3,368
Existing wives	243,708	Sons	3,548
„ daughters	22,142	Contingent.—Wives (including re-married widow).	288,315
„ sons	8,929	Daughters ...	30,405
Future wives of bachelors and widowers—next marriages.	263,659	Sons	9,800
Future wives of bachelors and widowers—subsequent marriages.	17,928	Potential.—Future wives of bachelors and widowers—next marriages.	274,627
Future wives of married officers ...	17,888	Future wives of bachelors and widowers—subsequent marriages.	21,124
Future children of bachelors and widowers—next marriages. / Future children of bachelors and widowers—subsequent marriages	106,377	Future wives of married officers.	21,001
Future children of married officers by existing wives. / Future children of married officers by future wives.	87,976	Future children of bachelors and widowers—next marriages. / Future children of bachelors and widowers—subsequent marriages.	122,892
Unmarried subscriptions	62,451	Future children of married officers by existing wives / Future children of married officers by future wives.	101,261
Outstanding contributions ...	2,488	Management charges	29,814
	948,738		927,547
		Surplus ...	21,191
			948,738

ENCLOSURE No. 2.

Stanley Day, Esquire, to India Office,

(Funds 388.) 14, Leadenhall Street, London, E. C.,

1st July 1902.

Sir,

I beg leave to submit my Report on the affairs of the Indian Civil Service Family Pension Fund as disclosed by the valuation of Mr. Willis Browne, as on 30th September 1898.

1. I have considered the mortality experienced in the Service, and approve the modifications of the rates originally used. The rates of mortality amongst civil servants show distinct improvement, particularly under the age of 30, where the experience is much more favourable than in the corresponding Military Fund. Of all mortality rates, that of the contributors themselves has the most important bearing upon the Fund.

2. The last valuation of the Fund, as at 30th September 1893, was made on the basis of interest at the rate of 4½ per cent., and disclosed a surplus, which was used in temporarily reducing the contributions by 27½ per cent.

On the present occasion Mr. Willis Browne has been instructed to make the valuation upon the assumption of interest at 3½ per cent. only being allowed at the future; and though he has reckoned upon the payment of the full original contributions, a large deficiency of 153·590*l.* appears. This deficiency, though large, should hardly cause surprise, for it will be remembered that the rates of donation and contribution were fixed on the assumption 4½ per cent. interest, and are wholly insufficient upon a 3½ per cent. basis, and each fresh liability imagined (as in pontential benefits) or assumed (as a new subscriber) brings at once an additional deficit upon the Fund.

3. A complete recasting of the contributions seems essential, and an increase of (roughly) 10 per cent. to 15 per cent. is involved, but even then complete equilibrium cannot be looked for, for there will remain the donations, &c., short paid in the past, and also the incumbent pensions granted upon the 4½ per cent. basis.

4. It seems unreasonable to ask new subscribers to pay into the Fund (over and above the contributions necessary for their own protection on a 3½ per cent. basis) an increased contribution to make up for the short payments of their predecessors, and the establishment of a separate Fund for each change in the rate of interest seems to suggest itself; the original rate of interest being continued to the old Fund.

Any disturbance likely to be caused by variation in the mortality and marriage rates would be only trivial as compared with an alteration of 1 per cent. in the rate of interest.

5. The values of "Potential" benefits and contributions have been brought into account for the first time, as is necessary on the reduction of the rate of interest; but, when the contribution rates have been suitably recomputed to provide for the pensions, these rather unsatisfactory calculations may be dispensed with.

It will be noticed that they practically account for the deficiency.

6. If the lower rate interest is determined upon, I would suggest that the Government might undertake to manage the Fund free of expense, which would not, in my opinion, be inconsistent with the regulations except in the minor point of Actuarial fees which are specially provided for.

Relief from the management charges would make a considerable reduction in the deficiency and would lighten future contributions appreciably.

7. Mr. Willis Browne has made an alternative valuation on a 4½ per cent. rate of interest as before, and shows a small surplus of 21,191*l.*; but as the Government appear to contemplate a reduction in the rate of interest at an early date (even if the 4½ standard is allowed now), it would be wise to retain this surplus in hand against the deficiency which must arise when the change is made. I should like to point out here that while a rate of interest is only fixed by the Government for five years, the Actuarial valuation looks forward through the lifetime of nearly two generations, as also did the original scheme.

8. In conclusion I beg to recommend—

(*a*) That in any case the full rate of contribution be resumed at once.

(*b*) That in the event the rate of interest being reduced to 3½ per cent.—

(1) the management charges be assumed by the Government;

(2) the contributions and donations be recalculated to fit the altered circumstances.

The Under Secretary of State for India.

I am, &c.,

STANLEY DAY.

ENCLOSURE No. 3.

INDIAN CIVIL SERVICE FAMILY PENSIONS.

Receipts and Payments each Half-year, from 1st October 1893 to 30th September 1898.

RECEIPTS.

Half year ended	In India.	Exchanged at	Equivalents in Sterling.	In England.
	Rs. A. P.	s. d.	£ s. d.	£ s. d.
31st March 1894	66,502 12 9	1 2·078	3,900 18 10	511 10 3
30th September 1894 ...	65,364 8 1	1 1·187	3,591 10 1	668 5 10
31st March 1895	82,109 2 2	1 1·010	4,450 19 11	811 2 6
30th September 1895 ...	74,608 10 9	1 1·303	4,135 9 11	1,135 3 8
31st March 1896	85,775 8 1	1 2·0294	5,014 1 7	1,268 13 6
30th September 1896 ...	87,980 4 7	1 2·111	5,172 17 6	1,495 6 8
31st March 1897* ...	.....	.....	6,367 10 3	1,522 0 3
30th September 1897* ...	.....	.....	7,476 17 0	660 18 11
31st March 1898* ...	.....	.....	7,383 15 1	1,046 15 6
30th September 1898* ...	.....	.....	7,258 13 6	1,171 1 1
			54,752 13 8	10,290 18 2
			£65,043 11s. 10d.	

PAYMENTS.

Half year ended	In India.	Exchanged at	Equivalents in Sterling.	In England.
	Rs. A. P.	s. d.	£ s. d.	£ s. d.
31st March 1894	.....	.....	†175 0 0	258 15 0
30th September 1894 ...	.....	.....	†175 0 0	258 15 0
31st March 1895	.....	.....	†175 0 0	327 2 1
30th September 1895 ...	219 1 9	1 1·303	12 2 11 †175 0 0	291 5 0
31st March 1896	.....	.....	†175 0 0	390 13 6
30th September 1896 ...	.....	.....	†175 0 0	475 12 6
31st March 1897* ...	.....	.....	128 2 7 †175 0 0	503 18 8
30th September 1897* ...	.....	.....	23 6 8 †187 10 1	769 9 0
31st March 1898* ...	.....	.....	†184 11 10	1,016 9 3
30th September 1898* ...	.....	.....	†181 9 3	981 9 2
			1,942 3 4	5,273 9 2
			£7,215 12s. 6d.	

* From the 1st October 1896, when the official rate of exchange came into force in connection with these Regulations, the Receipts and Payments in India have been advised in sterling.

† Charges of management.

INDIAN CIVIL SERVICE FAMILY PENSIONS.

Consolidated Account of Receipts and Expenditure (India and England) for the five years ended 30th September 1898.

	£ s. d.
Balance on 30th September 1893	41,008 3 1
Interest allowed on half-yearly balances from 1st October 1893 to 30th September 1898.	15,715 15 7

RECEIPTS.

—	In India.	In England.	Total.	
From married members.	£ s. d.	£ s. d.	£ s. d.	
Donations on marriage	10,113 6 6	2,244 13 10	12,358 0 4	
Subscriptions	18,630 8 3	4,046 16 5	22,677 4 8	
Interest on arrears ...	149 18 4	9 4 1	159 2 5	
	28,893 13 1	6,300 14 4	35,194 7 5	
Less refunds of excess payments.	.....	13 7 11	13 7 11	
	28,893 13 1	6,287 6 5	35,180 19 6	35,180 19 6
On account of children.				
For sons' subscriptions	1,675 7 6	530 5 1	2,414 12 7	
fine ...		0 12 0	0 12 0	
For " daughters' subscriptions.	3,673 11 2	843 2 3	4,516 13 5	
Unmarried daughters' subscriptions.	20,310 1 11	2,621 15 5	22,931 17 4	
	25,659 0 7	4,004 14 9	29,663 15 4	
Less refund of excess payments.	.... .	1 3 0	1 3 0	
	25,659 0 7	4,003 11 9	29,662 12 4	29,662 12 4
				122,457 10 6

PAYMENTS.

—	In India.	In England.	Total.	£ s. d.
	£ s. d.	£ s. d.	£ s. d.	
Annuities—				
Widows ...	147 13 6	4,265 2 9	4,412 16 3	
Sons	15 18 8	302 15 10	318 14 6	
Daughters ...	... ..	253 0 7	253 0 7	
Charge of management.	*1,778 11 2	*400 0 0	2,178 11 2	
Report by Actuary.	.....	52 10 0	52 10 0	
	1,942 3 4	5,273 9 2	7,215 12 6	7,215 12 6
Balance on 30th September 1898				115,241 18 0
				122,457 10 6

* From 1st October 1896 a charge of 200*l.* a year has been made in England, and from 1st April 1897 the charge in India has been 2½ per cent. on the gross receipts and disbursements there instead of the previous charge of 350*l.* a year (Despatch of Secretary of State, Financial (Funds), 2nd April 1896, No. 2).

FREDERICK TREVOR, Director of Funds.

The following order, issued by the Government of India in the Military Department, is republished for general information.

Simla, the 5th September 1902.

CANTONMENTS.

REGULATIONS.

No. 805.—The following draft of a notification which it is proposed to issue in exercise of the powers conferred by sections 26 and 27 of the Cantonments Act, 1889 (XIII of 1889), is published, as required by section 27, sub-section (*i*), of the said Act, for the information of persons likely to be affected thereby, and notice is given that the draft will be taken into consideration by the Governor-General in Council on or after the sixth day of October 1902.

2. Any objection or suggestion which may be received from any person with respect to the draft before the date fixed as aforesaid will be considered by the Governor-General in Council.

Draft Notification.

In exercise of the powers conferred by sections 26 and 27 of the Cantonments Act, 1889 (XIII of 1889), the Governor-General in Council is pleased to direct that to the proviso to section 18 of the Cantonment Code, 1899, the words "or, with the sanction of the Officer Commanding the District, for any period not exceeding six months" shall be added.

E. G. BARROW, *Major-General,*
Secy. to the Govt. of India.

The Calcutta Gazette.

WEDNESDAY, SEPTEMBER 10, 1902.

PART IB.

ORDERS BY THE LIEUT.-GOVERNOR OF BENGAL.

MUNICIPAL AND LOCAL.

NOTIFICATIONS.

No. 1486T.M.—The 1st September 1902.—It is hereby notified that, under section 27 of the Bengal Municipal Act, III of 1884, as modified up to 1st November 1896, the Lieutenant-Governor is pleased to appoint Mr. A. H. Wharton to be a Commissioner of the Dacca Municipality, in the district of Dacca, *vice* Mr. G. L. Garth, resigned.

Dacca.

No. 1488T.M.—The 1st September 1902.—It is hereby notified that, under section 23 of the Bengal Municipal Act, III of 1884, as modified up to 1st November 1896, the Lieutenant-Governor is pleased to appoint Mr. T. W. Clark to be the Chairman of the Bhatpara Municipality, in the district of the 24-Parganas.

24-Parganas.

No. 1498T.M.—The 2nd September 1902.—It is hereby notified for general information that, in supersession of Rule 5, Appendix A of the Rules issued under section 82 of the Bengal Municipal Act, III of 1884, as amended up to the 1st November 1896, for keeping the accounts of Municipalities and also for the audit of such accounts, the Lieutenant-Governor is pleased to make the following rule under the aforesaid section of the Act:—

"*Rule 5.*—Whenever a Municipality levies a house-rate upon owners and also a rate or rates upon occupiers for water, lighting, and latrines, a double set of registers shall be opened, *i.e.*, one set for owners and the other for occupiers. When two or more rates are chargeable to the occupier, they may be drawn on one bill; and, if found convenient, the necessary additional columns may be introduced in the forms and registers, so as to avoid keeping a separate set for each rate. If the names shown in the rating list for latrine or other special rates do not differ in more than 5 per cent. of the cases from those shown in the assessment list for house-rates, the Municipality may, with the previous approval of the Examiner of Local Accounts, maintain only one set of registers, the name of the occupier when different from that of the owner being entered in the register immediately below it. Where the names are identical or where the special rate is recoverable from the owner, the Municipality may issue a combined bill for all rates. In other cases separate bills must be issued."

No. 1506T.M.—The 2nd September 1902.—It is hereby notified that, under section 19 of the Bengal Local Self-Government Act, III of 1885, Mr. J. S. Davidson has been elected by the members of the Kendrapara Local Board, in the district of Cuttack, to be a member of the Cuttack District Board, *vice* Babu Sriram Chandra Bose, resigned.

Cuttack.

No. 1528 T.M.—The 2nd September 1902.—It is hereby notified for general information that, in accordance with the recommendation of the Commissioners of the Jamalpur Municipality, in the district of Monghyr, made at a meeting, the Lieutenant-Governor intends, in exercise of the power vested in the Local Government by section 9 (*c*) of the Bengal Municipal Act, III of 1884, as modified up to 1st November 1896, to revise the boundaries of the said Municipality so as to include within its limits the following areas, unless good reasons are shown to the contrary within six weeks from the date of publication of this notification within the Municipality:—

Monghyr.

On the north.—The area to the north of the present municipal northern limits to a line drawn from a point 150 feet north of the centre of the East Indian Railway tunnel to 1 mile 2 furlongs post on the East Indian Railway, Monghyr branch line, to a pillar placed near the Government road 360 feet north of the Indrook road. This area includes the villages of Chota Assickpur, Bara Assickpur, and Chota Dowlatpur.

Villages of Chota Assickpur, Bara Assickpur, and Chota Dowlatpur.

On the west.—The area to the west of the present municipal western limits to a line 15 feet east of the centre of the Government road from the pillar 360 feet north of the Indrook road to the Bedasi *talao*. This includes a part of village of Alipur (the other half is at present within municipal limits).

Part of village of Alipur.

On the south.—The area to the south of the present municipal limits by a line drawn through East Indian Railway milepost 299 near bridge No. 26 at right angles to the line from the hill meeting a line drawn parallel with the East Indian Railway main line at a distance of 5,700 feet, which joins the Bedasi *talao*. This includes the villages of Furreedpur, Phulkah, Ramchunderpur, Neemah, and Gararitolah.

Villages of Furreedpur, Phulkah, Ramchunderpur, Neemah, and Gararitolah.

On the east.—The area between the present municipal limit up to the foot of the Jamalpur hills from the line drawn at right angles to milepost No. 299 up to the pillar erected 150 feet north of the centre of the East Indian Railway tunnel, except where it follows the East Indian Railway land boundary pillars.

2. The revised boundaries of the Municipality after the inclusion of the above areas will be as follows:—

On the north.—From a point 360 feet north of the junction of the road leading to Indrook and 15 feet east of centre of the Government Road leading to Dharara from Monghyr to the 1¼ milepost on Monghyr, East Indian Railway branch, and from there to a point at the foot of the hills 150 feet north of the entrance to the tunnel.

On the east.—From the entrance to the tunnel along the foot of the Sonthali range of hills, except that portion of the hills occupied by the East Indian Railway Company on the hills themselves.

On the south.—By a line running at right angles to the East Indian Railway milepost No. 299 north of East Indian Railway bridge No. 26. This line running one mile west of the railway line, when it joins the western boundary line 4,900 feet south of the Bedasi *talao* parallel with Railway line.

On the west.—From the point 4,900 feet south of the Bedasi tank to the point 360 feet north of the junction of the road leading to Indrook by a line 15 feet east of the centre of the Government road everywhere except south of the Bedasi *talao*, where the line runs parallel with the railway line.

No. 1543 T.M.—The 3rd September 1902.—It is hereby notified that, under section 59 of the Bengal Municipal Act, III of 1884, as amended by Bengal Acts IV of 1894 and II of 1896, the Lieutenant-Governor approves the election by the Commissioners of the Narainganj Municipality, in the district of Dacca, of Mr. G. Morgan to be their Chairman.

Dacca.

No. 1550 T.M.—The 4th September 1902.—It is hereby notified for general information that the Lieutenant-Governor intends, in exercise of the power vested in the Local Government by section 1, clause 3 of Bengal Act II of 1891 (an Act to consolidate and amend the law relating to Hackney Carriages and Palanquins in Calcutta), and in accordance with the recommendation of the Commissioners of the Puri Municipality, in the district of Puri, made at a meeting, to extend the provisions of the said Act to the above Municipality, unless good reasons are shown to the contrary within one month from the date of publication of this notification within the Municipality.

Puri.

No. 1553 T.M.—The 4th September 1902.—It is hereby notified that, under section 19 of the Bengal Local Self-Government Act, III of 1885, the Lieutenant-Governor is pleased to appoint Babu Basanta Kumar Guha to be a member of the Munshiganj Local Board, in the district of Dacca, *vice* Maulvi Wakiluddin Ahmed, resigned.

Dacca.

No. 1564T.M.—The 4th September 1902.—It is hereby notified that the Commissioners of the Chapra Municipality, in the district of Saran, having at a meeting requested the Local Government, under sections 23 and 27 of the Bengal Municipal Act, III of 1884, as modified up to 1st November 1896, to appoint a Chairman, the Lieutenant-Governor is pleased to appoint Mr. J. F. Graham to be their Chairman, *vice* Mr. E. F. Growse, resigned.

Saran.

No. 1567T.M.—The 4th September 1902.—It is hereby notified that, under section 19 of the Bengal Local Self-Government Act, III of 1885, Mr. H. L. L. Allanson has been elected by the members of the Buxar Local Board, in the district of Shahabad, to be a member of the Shahabad District Board, *vice* Mr. R. L. Ross, resigned.

Shahabad.

No. 1591T.M.—The 5th September 1902.—It is hereby notified for general information that, under section 6 (*b*) of the Bengal Ferries Act, I of 1885, the Lieutenant-Governor is pleased to take possession of the private ferries noted in the margin on the Kaliganj-Boodhata road, in the district of Khulna, and to declare them to be public ferries.

Khulna.

Tarali Ferry.
Wazirpur Ferry.

2. The Lieutenant-Governor is also pleased, in exercise of the power conferred on him by section 35 of the aforesaid Act, to direct that the said ferries shall be managed by the District Board of Khulna, and that all the proceeds of the said ferries, and all the fines levied and compensation received under the said Act in respect thereof, shall be paid into the District Fund, with effect from the date of this notification.

No. 1593T.M.—The 5th September 1902.—It is hereby notified for general information that, under section 6 (*b*) of the Bengal Ferries Act, I of 1885, the Lieutenant-Governor is pleased to take possession of the private ferries at Alaipur, one over the Attarabanki river and the other over the Bhyrub river, in the district of Khulna, and to declare them to be public ferries.

Khulna.

2. The Lieutenant-Governor is also pleased, in exercise of the power conferred on him by section 35 of the aforesaid Act, to direct that the said ferries shall be managed by the District Board of Khulna, and that all the proceeds of the said ferries, and all the fines levied and compensation received under the said Act in respect thereof, shall be paid into the District Fund, with effect from the date of this notification.

No. 1599T.M.—The 5th September 1902.—It is hereby notified that the members of the Begusarai Local Board, in the district of Monghyr, having at a meeting, under section 25 of the Bengal Local Self-Government Act, III of 1885, requested the Lieutenant-Governor to appoint a Chairman, the Lieutenant-Governor is pleased under the said section to appoint Mr. G. Rainy to be the Chairman of that Local Board.

Monghyr.

No. 1621T.M.—The 5th September 1902.—It is hereby notified for general information that, in the exercise of the powers conferred on him by section 37 of the Bengal Local Self-Government Act, III of 1885, the Lieutenant-Governor is pleased to extend the provisions of Chapter II of Part I of the said Act relating to the formation of Union Committees to the district of Bankura, with effect from the 1st January 1903.

Bankura.

No. 1622T.M.—The 5th September 1902.—It is hereby notified for general information that, in the exercise of the powers conferred on him by section 38 of the Bengal Local Self-Government Act, III of 1885, the Lieutenant-Governor is pleased to constitute the following villages into a Union, to be called the Kotalpur Union, in the district of Bankura:—

Bankura.

Name of Local Board within whose jurisdiction the Union is constituted.	Name of Union.	Number of members of which the Union Committee shall consist.	Names of villages which constitute the Union.
Vishnupur ...	Kotalpur ...	7	Kotalpur. Siromonipur. Bagrol. Gantikrishnapur. Jagannathpur *alias* Jaltia.

2. These orders will take effect from the 1st January 1903.

E. W. COLLIN,
Offg. Secy. to the Govt. of Bengal.

ERRATUM.

No. 1595T.M.—The 5th September 1902.—In Government Declaration No. 1805M., dated the 22nd July 1902, published at page 146 of Part IB of the *Calcutta Gazette* of the 23rd idem, authorising the acquisition of a plot of land required by the Bhatpara Municipality for a trenching ground, for the words "village of Kankinara" in line 4 *read* "village of Bhatpara."

24-Parganas.

E. W. COLLIN,
Offg. Secy. to the Govt. of Bengal.

The Calcutta Gazette.

WEDNESDAY, SEPTEMBER 10, 1902.

PART II.

Advertisements.

[N. B.—Advertisements, Notices, &c., intended for insertion in this part of the Gazette cannot be received after Noon on Monday.]

LAND SALE NOTICES.

APPENDIX XXX.

[See Chapter III, Rule 9]

Advertisement of Sale.

NOTICE is hereby given that the undermentioned plots of land, no longer required by Government, situated along the Assam-Bengal Railway, in the district of Chittagong, will be put up to sale at 11 o'clock on Monday the 22nd September 1902, corresponding with the 6th of Ashwin 1309 B.S., at the Collector's office, Chittagong.

The purchasers of the several plots of land will be subject to the following conditions :—

1st.—The purchasers will have no power to make any excavation on the land nearer than fifteen feet from the Railway fencing, or plough the land closer than three feet from its foundation.

2nd.—If the amount of purchase-money does not exceed Rs. 100, the whole amount must be paid down at once.

3rd.—If the amount of purchase-money exceeds Rs. 100, one-fourth of the amount must be immediately deposited. If the balance be not paid by noon of the fifteenth day after the sale, reckoning the day of sale as one, or if that day be a close holiday, then by noon of the first succeeding office day, the sale shall be cancelled, the sum deposited being forfeited to Government and the lot again put up for sale at the risk of the defaulting purchaser, after issue of advertisement, as in the case of original sale.

4th.—The plots of land will be sold revenue-free to the highest bidders.

5th.—The purchasers shall be put in possession on receipt by the Collector of the orders of the Board confirming the sales.

Consecutive lot number.	Name of district.	Mauza.	Number of mile on which land is situate.	Situated on which side of the Railway.	Approximate area of lot in kanis and acres.		Land excluded from sale from each plot.		Commencement and termination of lot.	Boundary of lot.
					Maghi kani.	Acre.	Reasons for exclusion	A. R. P.		
1	2	3	4	5	6		7		8	9
					Kani.	A. R. P.				
1	Chittagong ...	Bhatiary	8th mile	East side	43·83	17 2 5	Nil	Nil	Nil	Nil.
2	Ditto ...	Sonaicherry	14th do.	West side	28·57	11 1 27	,,	,,	,,	,,
3	Ditto ...	Bausberia	15th do.	Ditto	25·68	10 1 8	,,	,,	,,	,,
4	Ditto ...	Katgar	20th do.	East side	35·80	14 1 11	,,	,,	,,	,,
5	Ditto ...	Terial	27th do.	West side	29·37	11 2 38	,,	,,	,,	,,
6	Ditto ...	Wahedpur	32nd do.	Ditto	25·31	9 3 29	,,	,,	,,	,,
7	Ditto ...	Gohania	36th do.	Ditto	23·30	9 1 11	,,	,,	,,	,,
8	Ditto ...	Azamnagar	45th do.	East side	21·10	8 1 30	,,	,,	,,	,,

Chittagong, the 26th July 1902.

E. GRAKE, *Collector.*

Advertisement of Sale.

NOTICE is hereby given that the undermentioned plots of land, no longer required by Government, situated along the Assam-Bengal Railway, in the district of Tippera, will be put up to sale at 12 o'clock on the 26th day of September 1902, corresponding with the 10th Asvin 1309 Fasli, at the office of the Collector of Tippera.

The purchasers of the several plots of land will be subject to the following conditions:—

1st.—The purchasers will have no power to make any excavations on the land nearer than 15 feet from the railway fencing, or plough the lands closer than 3 feet from its foundation.

2nd.—If the amount of purchase-money does not exceed Rs. 100, the whole amount must be paid down at once.

3rd.—If the amount of purchase-money exceed Rs. 100, one-fourth of the amount must be immediately deposited. If the balance be not paid by noon of the fifteenth day after the sale, reckoning the day of sale as one, or if that day be a close holiday, then by noon of the first succeeding office day, the sale shall be cancelled, the sum deposited being forfeited to Government, and the lot again put up for sale at the risk of the defaulting purchaser, after issue of advertisement, as in the case of original sale.

4th.—The plots of land will be sold revenue-free to the highest bidders.

5th.—The purchasers shall be put in possession on receipt by the District Collector of the orders of the Board confirming the sale.

Consecutive lot No.	Name of district.	Pargana and mauza.	Number of mile on which land is situate.	Situated on which side of the railway.	Approximate area of lot in bighas and in acres. B. K. C.	Approximate area of lot in bighas and in acres. A. R. P.	Land excluded from sale from each lot. Reasons for exclusion.	Land excluded from sale from each lot. A. R. P.	Commencement and termination of lot.	Boundary of lot.
1	2	3	4	5	6		7		8	9
1	Tippera ...	Pargana Homnabad, mauza Uttarkul.	At mile No. 78.	South-west of Railway line.	3 6 2	1 0 14·9	.....	.....	Lots Nos. 1 to 18	*North*—Mauza Uttarkul. *South*—Mauza Uttarkul and Railway line. *East*—Mauza Uttarkul. *West*—Railway line.
2	Ditto ...	Pargana ditto, mauza Noagaon.	Ditto	Ditto	0 15 5	0 1 ·4	.....	.....	Ditto	*North*—Mauza Uttarkul and Railway line. *South*—Mauza Noagaon. *East*—Railway line and mauza Noagaon. *West*—Mauza Noagaon.
3	Ditto ...	Pargana ditto, mauza Ashkanta.	At mile No. 75.	East of Railway line.	1 17 0	0 2 19·5	.....	.....	Ditto	*North*—Railway line. *South*—Mauza Ashkanta. *East*—Railway line. *West*—Mauza Ashkanta.
4	Ditto ...	Pargana Homnabad, mauza Lakshanu.	At mile No. 0.	Within ¼ mile of the Railway station.	1 8 11	0 1 35·5	.....	.....	Ditto	*North*— *South*— *East*— *West*—District Board road. (Mauza Lakshanu.)
5	Ditto ...	Pargana Mehar, mauza Upalata.	At mile No. 11.	East of Railway line.	0 17 15	0 1 7·4	.....	.....	Ditto	*North*—Mauza Upalata. *South*—Railway line. *East*— *West*—Mauza Upalata.
6	Ditto ..	Pargan Meharkul mauza Bejoypur.	At mile No. 10.	North of Railway line.	2 16 4	0 3 28·7	.....	.....	Ditto	*North*—Mauza Bejoypur. *South*—Bikrampur land attached to the Railway fencing. *East*—Bejoypur mauza. *West*—Railway line.
7	Ditto ...	Pargana Mehar, mauza Naora.	At mile No. 9½.	East of Railway line.	5 0 8	1 2 25·7	.....	.....	Ditto	*North*—Railway line. *South*—Southern bank of Dighi. *East*—Khal or boundary of mauza Boralia. *West*—Dighi water.
8	Ditto ...	Ditto ...	Ditto	Ditto	8 7 8	2 3 1·9	.....	.....	Ditto	*North*—Railway line. *South*—Southern bank of Naora Dighi. *East*—Naora Dighi. *West*—Chandra Kumar Chakerbutty, Jahiraddi Patwari and Moniram Dhupi.
9	Ditto ...	Pargana Meharkul mauza Saidpur.	At mile No. 7.	South of Railway line.	47 8 14	15 2 21·4	.....			*North*— *South*— *East*—District Board road. *West*—Gangjuri khal. (Gangjuri khal.)
10	Ditto ...	Ditto ...	Ditto	Ditto	32 12 8	10 3 5·6	.....	.....	.....	*North*—Gangjuri khal. *South*—Saidpur. *East*—Railway line. *West*—District Board road.
11	Ditto ..	Ditto ...	Ditto	Ditto	10 14 4	3 2 6·6	.....	.....	.....	*North*—Gangjuri khal. *South*—Jirsé Gasi and khash patia. *East*—District Board road. *West*—Gangjuri khal.
12	Ditto ...	Ditto .	Ditto	Ditto	14 12 12	4 3 14·2	.....	.....	.....	*North*—Rajabali. *South*—Dhalia river. *East*—District Board road. *West*—Gangjuri khal.
13	Ditt ..	Pargana ditto, mauza Barapara.	At mile No. 10.	North of Railway line.	10 12 13	3 2 2·8	.....	.....	.....	*North*—Gangjuri khal. *South*—Khal or Charpara mauza. *East*—Khal, khal side and District Board road. *West*—Dakshin Bejoypur.
14	Ditto ...	Pargana Tora, Tapa Ibrahimpur.	At mile No. 17.	East of Railway line.	120 13 14	30 3 23·8	.....	.....	.....	*North*—Mauza Toragor. *South*—Railway line. *East*—Mauza Toragor. *West*—Hajigunge khal.
15	Ditto ..	Pargana ditto, mauza Kangnish Hatila.	At mile No. 15.	Ditto	98 9 4	32 2 6·9	.....	.....	Lots Nos. 1 to 18...	*North*—Railway line. *South*—Kangnish mauza. *East*—Khal of Sholkhali. *West*—Kangnish.
16	Ditto ...	Pargana ditto, mauza Panchbaria.	At mile No. 23.	Ditto	31 14 13	10 1 38·6	.....	.....	.....	*North*—Debpur brickfield. *South*— *East*— *West*—Mauza Panchbaria.
17	Ditto ...	Pargana ditto, mauza Debpur.	Ditto	Ditto	43 7 14	14 1 10 9	.....	.....	.....	*North*—Railway line. *South*—Debpur brickfield. *East*— *West*—Debpur mauza.
18	Ditto ...	Pargana ditto, mauza Panchbaria Sota Sundar.	Ditto	Ditto	2 13 8	0 3 21·4	.....	.....	.....	*North*—Panchbaria brickfield. *South*—Dakatia river. *East*—Mauza Panchbaria Sota Sundar. *West*—Mauza Panchbaria Sota Sundar.

Tippera Collectorate, the 2nd August 1902.

H. W. P. SCROOPE, Collector.

Notification A

NOTICE is hereby given, under sections 6 and 13, Act XI of 1859, that the undermentioned estates and shares of estates in the district of Hooghly will be put up for sale at the office of the Collector of that district on the 25th September 1902 at 12 noon for arrears of revenue and other demands which by law are realisable as arrears of land revenue.

When in columns 5, 7, and 9 of the appended statement it is stated that only a share is to be sold, it is to be understood that a separate account is kept for that share.

Touzi No.	Name of mahal and pargana.	Sadar jama of whole estate.	Whether the whole estate is to be sold	If only a share is to be sold specification of such share or shares.	Names of proprietors of property to be sold.	If only a share is to be sold the sadar jama of such share	If the whole estate is to be sold, the arrears due from it.	If only a share is to be sold, the arrears due from it.
1	2	3	4	5	6	7	8	9
4089, residuary	Kalupukharia thana Pandua, pargana Arambagh	Rs A P. 13 526 1 1		Residuary s. e., 2 annas 13 gandas 1 cora 1 kranti share of the estate.	Prem Chand Roy Rama Pado Roy and others of Madhobpur, thana Arambagh.	Rs. A. P 2 253 9 5	Rs A. P	Rs. A P 7 874 10 4

Hooghly Collectorate, Chinsura, the 30th July 1902.

R C HAMILTON, Collector

Notification A

NOTICE is hereby given, under sections 6 and 13, Act XI of 1859, that the undermentioned estates and shares of estates in the district of Chittagong will be put up for sale at the office of the Collector of that district on the 26th September 1902 at 12 A M for arrears of revenue and other demands which by law are realisable as arrears of land revenue.

When in columns 5, 7 and 9 of the appended statement it is stated that only a share is to be sold, it is to be understood that a separate account is kept for that share.

Touzi No.	Name of mahal and pargana	Sadar jama of whole estate.	Whether the whole estate is to be sold	If only a share is to be sold, specification of such share or shares.	Names of proprietors of property to be sold	If only a share is to be sold, the sadar jama of such share.	If the whole estate is to be sold, the arrears due from it.	If only a share is to be sold, the arrears due from it
1	2	3	4	5	6	7	8	9
2093 2100 1812	Thana Hathazari, Taraf Krishna Kishore Kanungoe	Rs. A P 645 6 7	Only a share will be sold	Only share No 1 and no other share will be sold	Fazal Ahmed Bazal Samad and others.	Rs A P. 524 13 6	Rs A. P ...	Rs A. P 131 [illegible]

N B—The amount shown in column 9 represents the arrear due for kist ending 25th May 1902.

Chittagong, the 16th August 1902.

P. E. CAMMIADE, Offg. Collector.

Notification A.

NOTICE is hereby given, under sections 6 and 13, Act XI of 1859, that the undermentioned estates and shares of estates in the district of Hooghly will be put up for sale at the office of the Collector of that district on the 25th September 1902 at 12 noon for arrears of revenue and other demands which by law are realisable as arrears of land revenue

When in columns 5, 7 and 9 of the appended statement it is stated that only a share is to be sold, it is to be understood that a separate account is kept for that share.

Touzi No.	Name of mahal and pargana.	Sadar jama of whole estate.	Whether the whole estate is to be sold	If only a share is to be sold, specification of such share or shares	Names of proprietors of property to be sold.	If only a share is to be sold, the sadar jama of such share.	If the whole estate is to be sold, the arrears due from it.	If only a share is to be sold, the arrears due from it.
1	2	3	4	5	6	7	8	9
35	Mandalghat, pargana Mandalghat.	Rs A P 2,23,429 3 8	..	Residuary share consisting of 3a 13g 3c 8kng 6,ttl share of the estate	Manic Lal Seal and others	Rs A P 51 6.6 8 6	Rs A P	Rs A P. 477 13 10
62	Ramjangal pargana Mandalghat	19,342 4 9	..	Residuary share consisting of 7a. 5g share of the estate	Amrita Lal Seal and others	8,760 9 8	..	1,138 4 3

Hooghly Collectorate, the 16th August 1902.

MAHESH CHANDRA SEN, Sale Deputy Collector.

Advertisement of Sale.

NOTICE is hereby given that the undermentioned plots of land, no longer required by Government, situated along the Assam Bengal Railway, in the district of Tippera, will be put up to sale at 12 o'clock on the 3rd day of October 1902, corresponding with 17th Assin (1309 Fusli) at the office of the Collector of Tippera.

The purchasers of the several plots of land will be subject to the following conditions:—

1st.—The purchasers will have no power to make any excavations on the land nearer than 15 feet from the railway fencing, or plough the lands closer than three feet from its foundation.

2nd.—If the amount of purchase-money does not exceed Rs. 100, the whole amount must be paid down at once.

3rd.—If the amount of purchase-money exceed Rs. 100, one-fourth of the amount must be immediately deposited. If the balance be not paid by noon of the fifteenth day after the sale, reckoning the day of sale as one, or if that day be a close holiday, then by noon of the first succeeding office day, the sale shall be cancelled, the sum deposited being forfeited to Government, and the lot again put up for sale at the risk of the defaulting purchaser after issue of advertisement as in the case of original sale.

4th.—The plots of land will be sold revenue-free to the highest bidders.

5th.—The purchasers shall be put in possession on receipt by the District Collector of the orders of the Board confirming the sale.

Consecutive lot No.	Name of district.	Pargana and mauza.	Number of mile on which land is situate.	Situated on which side of the railway.	APPROXIMATE AREA OF LOT IN BIGHAS AND IN ACRES.		LAND EXCLUDED FROM SALE FROM EACH LOT.		Commencement and termination of lot.	Boundary of lot.
					B. K. C.	A. R. P.	Reasons for exclusion.	A. R. P.		
1	2	3	4	5	6		7		8	9
19	Tippera...	Pargana Meharkul, mauza Dharmapur.	At mile No. 95.	West of Railway line.	6 6 2	2 0 13·5	.....	.....	Lot Nos. 19 to 26	(1) *North*—Comilla station yard. *South*—Level cross in Comilla station yard. *East*—Comilla Railway station. *West*—Mauza Dharmapur or District Board road.
20	Ditto ...	Ditto ...	Ditto	Ditto	1 2 12	0 1 20·2	.....	.....	Ditto ...	(2) *North*—Comilla station yard. *South*—District Board road. *East*— *West*— } Relinquished land.
21	Ditto ...	Pargana ditto, mauza Badarpur.	At mile No. 97.	North of Railway line.	7 19 9	2 2 21·9	.....	.....	Ditto ...	(3) *North*—District Board road or embankment of Gumti river. *South*—Golapkha, Kadirboksh and mauza Badarpur. *East*—Homestead land and cultivated land of Golapkha and Kadirboksh. *West*—Railway line.
22	Ditto ...	Pargana Lanhagar, mauza Ram Chandrapur.	At mile No. 110.	Ditto	23 6 10	7 2 34·1	.....	.....	Ditto ...	(4) *North*— *South*— } Ramchandrapur. *East*—Railway line. *West*—Ramchandrapur.
23	Ditto ...	Ditto ...	Ditto	Ditto	18 1 2	5 3 35·1	.....	.....	Ditto ...	(5) *North*— *South*— *East*— } Ramchandrapur. *West*—Railway line.
24	Ditto ...	Pargana Homnabad, mauza Kakala.	At mile No. 5.	East of Railway line.	94 5 10	31 0 26·7	.....	.....	Ditto ...	(6) *North*—Mauza Kakala. *South*—Railway line. *East*—Mauza Kakala. *West*—Kurjan khal.
25	Ditto ...	Pargana Nuunagar, mauza Nakhora.	At mile No. 114.	South of Railway line.	1 11 4	0 .3 2·5	.....	.....	Ditto ...	(7) *North*—Nakhora and Railway line. *South*—Nakhora. *East*—Railway line. *West*—Nakhora.
26	Ditto ...	Pargana Lanhagar, mauza Pachara.	At mile No. 105.	Noth of Railway line.	1 1 11	0 1 17·235	.....	.....	Ditto ...	(8) *North*—Asad Gani. *South*—Bank of tank. *East*—Nabab Ali. *West*—District Board road.

Comilla, the 12th August 1902.

H. W. P. SCROOPE, Collector.

Advertisement of Sale.

NOTICE is hereby given that the undermentioned plots of land, no longer required by Government, situated along the Assam-Bengal Railway, in the district of Noakhali, will be put up to sale at 12 o'clock on Monday, the 29th September 1902, corresponding with the 13th Ashwin 1309 B. S., in the office of the Collector of Noakhali.

The purchasers of the several plots of land will be subject to the following conditions:—

1st.—The purchasers will have no power to make any excavations on the land nearer than 15 feet from the railway fencing, or plough the lands closer than 3 feet from its foundation.

2nd.—If the amount of purchase-money does not exceed Rs. 100, the whole amount must be paid down at once.

3rd.—If the amount of purchase-money exceed Rs 100, one-fourth of the amount must be immediately deposited. If the balance be not paid by noon of the fifteenth day after the sale, reckoning the day of sale as one, or if that day be a close holiday, then by noon of the first succeeding office day, the sale shall be cancelled, the sum deposited being forfeited to Government, and the lot again put up for sale at the risk of the defaulting purchaser, after issue of advertisement, as in the case of original sale.

4th.—The plots of land will be sold revenue-free to the highest bidders.

5th.—The purchasers shall be put in possession on receipt by the District Collector of the orders of the Board confirming the sale.

Consecutive lot number.	Name of district.	Pargana and mauza.	Number of mile on which land is situate.	Situated on which side of the Railway.	Approximate area of lot in bighas and in acres.		Land excluded from sale from each lot.		Commencement and termination of lot.	Boundary of lot.
					B. K. C.	A. R. P.	Reasons for exclusion.	A. R. P.		
1	2	3	4	5	6		7		8	9
					Case No. 1.					
1	Noakhali	Pargana Bedrabad, mauza Sabadebpur.	56	South-west	1 10 6	0 2 0	.....	.....	.....	*North*—Road to Railway station. *South*—Feni school compound. *East*—Ditch. *West*—Cart stand.
2	Ditto ...	Pargana Bedrabad, mauza Barahipur.	56	North-east	4 8 12	1 1 35	.....	.....	.....	*North*—Village road. *South*— *East*— *West*— } Khal.
3	Ditto ...	Ditto ...	56	Ditto ...	4 9 0	1 1 35	.....	.....	.....	*North*—Cultivated land. *South*—Village road. *East*—Cultivated land. *West*—Tank.
					Case No. 2.					
4	Ditto ...	Pargana Alahabad, mauza Fatehpur.	58	South-west	0 11 1	0 0 29	.....	.....	.....	*North*—Railway land. *South*— *East*— *West*— } Cultivated land.
5	Ditto ...	Pargana Bedrabad, mauza Matbaria.	58	Nor h ...	0 8 14	0 0 23	.....	.....	.....	*North*—Cultivated land. *South*—Railway land. *East*— *West*— } Cultivated land.
6	Ditto ...	Ditto ...	58	North-east	0 4 8	0 0 13	.....	.....	.....	*North*—Cultivated land. *South*—Railway land. *East*— *West*— } Cultivated land.
7	Ditto ...	Pargana Amirabad, mauza Fazilpur.	60	Ditto ...	0 13 14	0 0 37	.....	.....	.....	*North*—Cultivated land. *South*—Railway land. *East*— *West*— } Cultivated land.
					Case No. 3.					
8	Ditto ...	Pargana Amirabad, mauza Rajnagar.	49	North ...	14 15 3	4 3 21	.....	.....	.....	*North*—Homestead land. *South*—Railway land. *East*—Muhuri river. *West*—Railway land.

Noakhali, the 29th July 1902. SASI BHUSAN SEIN, Depy. Collector in charge.

Notification B.

NOTICE is hereby given, under sections 5 and 13, Act XI of 1859, that unless the arrears mentioned below are paid on or before the next latest date of payment, viz., the 28th June 1902, the undermentioned estates or shares of estates in the district of Tippera will be put up for sale at the office of the Collector of that district on the 26th September 1902 at 12 o'clock for the said arrears.

When in columns 5, 7 and 9 of the appended statement it is stated that only a share is to be sold, it is to be understood that a separate account is kept for that share.

Touzi No.	Name of mahal and pargana.	Sadar jama of whole estate.	Whether the whole estate is to be sold.	If only a share is to be sold, specification of such share or shares.	Names of proprietors of property to be sold.	If only a share is to be sold, the sadar jama of such share.	If the whole estate is to be sold, the arrears due from it.	If only a share is to be sold, the arrears due from it.	Nature and amount of demand for which to be sold.
1	2	3	4	5	6	7	8	9	10
		Rs. A. P.				Rs. A. P.	Rs. A. P.	Rs. A. P.	Rs. A. P.
1993	Pargana Uttar Sahapur char near Nagarer Kandi, No. 211.	1,296 10 9	Whole ...	.....	Ishan Chandra Datta and others.	.....	202 9 4	.....	202 9 4

Tippera Collectorate the 29th May 1902. H. W. SCHOOPE, Offg. Collector.

Notification A.

NOTICE is hereby given, under sections 6 and 13, Act XI of 1859, that the undermentioned estates and shares of estates in the district of Midnapore will be put up for sale at the office of the Collector of that district on Friday, the 26th September 1902 for arrears of revenue and other demands which by law are realisable as arrears of land revenue.

When in columns 5, 7 and 9 of the appended statement it is stated that only a share is to be sold, it is to be understood that a separate account is kept for that share, and that the other share or shares in the estate are excluded from the sale

Tauzi No.	Name of mahal and pargana.	Sadar jama of whole estate.	Whether the whole estate is to be sold.	If only a share is to be sold, specification of such share or shares.	Names of proprietors of property to be sold.	If only a share is to be sold, the sadar jama of such share.	If the whole estate is to be sold, the arrears due from it.	If only a share is to be sold, the arrears due from it.
1	2	3	4	5	6	7	8	9
		Rs. A. P.				Rs. A. P.	Rs. A. P.	Rs. A. P.
154	Pargana Bajarpore, mahal Panchbajari.	650 10 8	Entire ..	.....	Sarat Chandra Jana and others.	.....	71 2 8	.....
276	Pargana Baliata, mahal Bhitarbinode	1,658 14 10	Do. ...		Maheswar Masanta and others.	.....	180 4 9	.....
374	Pargana Bhaitgar Bahirimutha, mahal Bhagabanpore *alias* Bar Bhagabanpore	1,010 9 5	.....	S. A. I	Madhusudan Das	505 4 9	.....	37 12 0
588	Pargana Dakhinmal, mahal Haripore.	6,769 1 5	.....	S. A. II	Haripriya Devi	3,384 5 9	.....	740 0 3
921	Pargana Kasijora, mahal Chakdaha *alias* Radhaballavpore.	9,185 8 0 with police.	.....	Residuary share excluding S. A. Nos. I, II, III, IV, V, VI.	Srimaty Niroda Moyi Dasi and others.	1,232 9 5	.....	283 11 9
937	Pargana Kasijora, mahal Gar Puru-otheinpore *alias* Chaitannapore.	738 10 8	.	Residuary share excluding S. A. Nos. I and II.	Ganga Narain Maity and others.	590 14 8	.....	86 7 3
939	Pargana Kasijora, mahal Gazal.	2,467 8 3	Entire ...	.....	Srinarain Pal	.....	270 0 0	.....
944	Pargana Kasijora, mahal Gumukpota.	8,185 0 0 with police.	.....	S. A. I	Mani Mohon Ray proprietor Jogendra Nath Pathak mortgagee.	1,592 8 0	.....	174 8 0
947	Pargana Kasijora, mahal Gogras Patna	1,512 2 3 with police.	.....	Residuary share excluding S. A I.	Shaikh Sorfuddin and others	604 0 9	.....	55 3 9
948	Pargana Kasijora, mahal Gogras Keshabber.	1,005 8 8	Entire ...	.. ..	Srimotya Niroda Moyi Dasi and others.	.....	110 0 0	.....
974	Pargana Kasijora, mahal Khandakhola.	936 11 2	Do. ..	.....	Srimotya Kailashi Dasi and others.	.....	102 8 0	.....
978	Pargana Kasijora, mahal Manoharpur *alias* Prasad Chak.	1,625 15 6	Do. ...	.....	Srimotya Niroda Moyi Dasi and others.	.....	178 8 0	.....
1007	Pargana Kasijora, mahal Purba Itra.	43,143 8 3 with police.	.....	Residuary share excluding S. A. Nos. 1, 3, 4, 5, 6, 7, 8, and 9.	Manik Lal Seal	13,100 5 7	.....	75 7 6
1019	Pargana Kasijora, mahal Sidhuapota.	675 1 11	Entire ...	.....	Srimotya Tarangini Dassi ...	. ..	74 4 0	... ..
1030	Pargana Kasijora, mahal Uther Usatpore.	3,473 9 7	.. .	S. A 8	Nimai Chand De and others	640 0 0	.....	70 0 0
1066	Pargana Kasijora, kismat mahal Palsa Uther.	2,030 1 2 with police.	.....	Residuary share excluding S. A. 1, 2, 3, 4.	Amarnath Ghose and others	532 5 2	.....	59 4 9
1346	Pargana Khatnagor, mahal Dewli.	1,069 5 0	Entire ...	.....	Nimai Chand De	.....	117 14 3	.....
1467	Pargana Khander, mahal Bansgeria *alias* Sahorda.	2,098 8 6	.....	Residuary share excluding S. A. Nos. 4, 5, 6, 8, 9, 10, 11, 12, 13, 14, 15, 16.	Sibaprasad Bhakhat and others.	975 12 4	.....	24 4 1
1730	Pargana Moynachore, mahal Anandapore.	5,057 4 9	.....	S. A. 8	Sripati Charan De	1,795 3 8	.....	196 14 0
1731	Pargana Moynachore, mahal Ankhua Purba	1,001 7 2	.....	Residuary share excluding S. A. I.	Ganganarain Maity	500 11 7	.....	55 4 6
1884	Pargana Mujnamutha, mahal Nankar Bajapti.	2,130 9 0	.....	Residuary share excluding S. A. Nos. 1, 2, 4, 5, 6, 7.	Purna Chandra Mitra and others.	746 13 2	.....	163 5 1
1885	Ditto ditto ...	2,130 9 0	... .	S A I	Kritarthamoyi and others ...	706 12 5	.....	154 0 0
2340	Pargana Sabang, mahal Mahar.	1,302 1 0	Entire ...	. ....	Syed Matanath Ali and others	.....	33 8 0	.....
2347	Ditto ditto ...	1,445 9 0	Do. ..	..	Sarat Chandra Jana and others.	.....	156 9 0	.....
2427	Pargana Sahapur, mahal Haslmpore.	1,014 2 10 with police.	Do. ...	...	Girish Chandra Jana and others.	.....	110 12 6	.....
				Temporary-settled Estates, Part II.				
2484	Pargana Patuspore, mahal Mangolpore.	2,491 0 0		Residuary share excluding S. A. No. 2.	Upendra Nandan Das Mohapatra.	2,016 2 6	....	14 8 0

Midnapore Collectorate, Arrear Collection Department, the 16th August 1902. H. LUSON, Collector of Midnapore.

Notification.

NOTICE is hereby given, under sections 6 and 13, Act XI of 1859, that the undermentioned estates or shares of estates in the district of Dacca will be put up for sale at the Collector's office of that district on the 23rd September 1902 for arrears of revenue and other demands which by the Regulations and Acts in force are directed to be realised in the same manner as arrears of revenue.

When in columns 5, 7, and 9 of the appended statement it is stated that only a share is to be sold, a separate account is kept for such share and the other share or shares in the estate are excluded from the sale :—

Tauzi No.	Name of mahal and pargana.	Sadar jama of whole estate.	Whether the whole estate is to be sold	If only a share is to be sold, specification of such share or shares.	Names of proprietors of property to be sold.	If only a share is to be sold, the sadar jama of such share.	If the whole estate is to be sold, the arrears due from it.	If only a share is to be sold, the arrears due from it.
1	2	3	4	5	6	7	8	9
8433	Pargana Khajurpur Gogchar Krokchar within char Bhedar.	Rs. A. P. 858 0 0	16 annas ...	.....	Lalit Mohan Rai ...	Rs. A. P. . . .	Rs. A. P. 212 0 0	Rs. A. P.

Dacca Collectorate, the 13th August 1902. J. T. RANKIN, Collector of Dacca.

Notification A.

NOTICE is hereby given, under sections 6 and 13, Act XI of 1859, that the undermentioned estates and shares of estates in the district of Saran will be put up for sale at the office of the Collector of that district on the 22nd September 1902 at 11 A.M. for arrears of revenue and other demands which by law are realisable as arrears of land revenue.

When in columns 5, 7 and 9 of the appended statement it is stated that only a share is to be sold, it is to be understood that a separate account is kept for that share.

Tauzi No.	Name of mahal and pargana.	Sadar jama of whole estate.	Whether the whole estate is to be sold.	If only a share is to be sold, specification of such share or shares.	Names of proprietors of property to be sold.	If only a share is to be sold, the sadar jama of such share.	If the whole estate is to be sold, the arrears due from it.	If only a share is to be sold, the arrears due from it.
1	2	3	4	5	6	7	8	9
				Part I.		Rs. A. P.	Rs. A. P.	Rs. A. P.
78	Deopoor, pargana Bal	3,309 12 10	Entire ...	Nil	Babu Gulab Chand ...	.....	320 0 3	.....
394	Benut, pargana Bal ...	883 13 8	...	Ijmali— As. Benut ... ... 8 Maalhantola ... ... 12 Rampur ... ... 16 Birtimihdar Bhadaur ... ... 16 All other shares besides that specified will be excluded from sale.	Harihar Pd. and others	650 2 8	.....	2 15 3
2074	Baterdeh, pargana Dangsi.	1,425 0 0	.....	Ijmali— As. P. Bhagar Jallaur ... ... 8 0 Biraicha ... ... 2 0 Bhadeya ... ... 5 4 Kotwa ... ... 8 0 Bhadkuian ... ... 6 8 Panditpura ... ... 8 0 Dangsi ... ... 2 0 Hochea ... ... 8 0 Batardeh ... ... 2 8 Pipra ... ... 1 4 Bhagwar ... ... 6 8 Soraiia ... ... 2 0 Parsowna ... ... 8 0 Parsa ... ... 8 0 All other shares besides that specified will be excluded from sale.	Sarjoo Pd. Narain Singh, Siri Pd. Narain Singh and others.	661 3 7	.....	54 4 4
				Part II.				
2080	Deara Baghwar or Baghwar Deara, pargana Dangsi.	620 0 0	Entire ...	.....	Babu Sheopertap Sahai and others.	.....	0 7 0	.....
				Part I.				
2492	Kerwakatsa, pargana Gos.	3,124 6 8	..	Ijmali— A. P. K. M. D. K. B. T. Kerwa ... ... 0 8 7 2 19 0 0 0 Parsa ... ... 0 7 3 10 0 0 0 0 Bajrahia ... 0 0 4 10 0 0 0 0 Katsakesopoor 8 8 0 0 0 0 0 0 Kumhalia ... 9 9 3 15 0 0 0 0 Rampooratowli 12 6 0 0 0 0 0 0 Peerapoor ... 10 1 17 10 0 0 0 0 Siswa ... ... 6 0 7 10 0 0 0 0 Sarayabasant .. 9 4 10 0 0 0 0 0 Sarayarathnagar 10 2 17 10 0 0 0 0 Faridpur ... 4 8 5 0 0 0 0 0 Fatehpur ... 8 10 5 0 0 0 0 0 Ardewa ... ... 12 6 0 0 0 0 0 0 Akolhi ... ... 8 10 5 0 0 0 0 0 Usri ... ... 8 5 11 5 0 0 0 0 Gahbpur ... 10 1 17 10 0 0 0 0 Chowrasi ... 8 10 5 0 0 0 0 0 Agahra ... ... 10 11 5 0 0 0 0 0 Ashtpur ... 9 7 0 9 12 13 2 10 Ghurna ... 12 6 0 0 0 0 0 0 Chhapramahesh 8 10 5 0 0 0 0 0 Downgodhua ... 8 10 5 0 0 0 0 0 All other shares besides that specified will be excluded from sale.	Isar Sahai and others ...	1,884 1 2	.....	112 6 8
2012	Mithepoor pargana ...	747 11 8	....	Ijmali— A. P. K. Repura ... ... 9 0 0 Mithepoor ... ... 10 9 10 Sirsa *alias* Parsa ... ... 11 3 18 Bhualpoor ... ... 13 3 0 All other shares besides that specified will be excluded from sale.	Musamat Jugpati Kuar and others.	525 11 10	.....	313 5 7
3474/1	Gamhari, pargana Madhal.	4,218 13 0	.....	Separate account No. 1— As. Gamhari Mathia ... ... 2 Hamidpur ... ... 2 Sanwalia ... ... 3 Kamalmarwa ... ... 2 Sitalpur paraya ... ... 2 Ghangarora ... ... 2 Rewtch ... ... 2 Banskali .. .. 2 Khaira Azam ... ... 2 Dewkuti ... ... 2 Hakam ... ... 2 Sisai ... ... 2 Sitlabad ... ... 2 Mangroochapra 2	Chitrkut Nath, Badri Nath and Rameshar Nath and others.	697 5 8	.....	0 11 11

Tauzi No	Name of mahal and pargana.	Sadar jama of whole estate.	Whether the whole estate is to be sold.	If only a share is to be sold, specification of such share or shares.	Names of proprietors of property to be sold.	If only a share is to be sold, the sadar jama of such share.	If the whole estate is to be sold, the arrears due from it.	If only a share is to be sold, the arrears due from it.
1	2	3	4	5	6	7	8	9
				As. Separate account No. 1—*concld.* Rahra ... ... 2 Rehuatal ... ... 2 Saura ... ... 2 Gauri ... ... 2 Sankarpoora ... ... 2 Fakharpoora ... ... 2 Ramgadh ... ... 2 Ramoo ... ... 2 All other shares besides that specified will be excluded from sale.		Rs. A. P.	Rs. A. P.	S. A. P.
4507/9	Sheodiari, pargana Manjhi.	13,840 15 6	.....	A. Separate account No. 9— Sheodiari ... ... 1 All other shares besides that specified will be excluded from sale.	Babu Lal Singh, through Musamat Pachrattan Kuar.	865 1 0	.....	216 4 0
4507/10	Ditto ...	13,840 15 6	.....	P. K. Separate account No. 10— Sheodiari ... ... 9 12 All other shares besides that specified will be excluded from sale.	Bhirgunath Singh and others.	692 0 9	.....	129 11 0

Saran Collectorate, the 18th August 1902.

P. G. ROGERS, *for* Collector.

Advertisement of Sale.

NOTICE is hereby given that the proprietary right of Government, as specified in the conditions of sale below, to the undermentioned estate, situate in the district of Khulna, will be put up to sale at the Khulna Collectorate on the 29th September 1902, corresponding to 13th Aswin 1309 B.S.

The purchasers will be subject to the following conditions of sale:—

Conditions of Sale.

1st.—The estate to be sold to the highest bidder above the upset price, which will be fixed by the Collector at the time of sale. The purchaser of this estate will be considered as the proprietor of the estate, and the entire proprietary right of Government in such estate will be transferred to him subject to the revenue fixed in perpetuity.

2nd.—The sale to be subject to existing leases and to the rights conferred by the settlement proceedings and by the laws in force, and purchasers to be bound to respect the rights of resident cultivators who have signed the schedule of assessment prepared by the revenue authorities.

3rd.—If the amount of purchase-money do not exceed Rs. 100, the whole amount to be paid down at once.

4th.—If the amount of purchase-money exceed Rs. 100, one-fourth of the amount of bid to be immediately deposited. If the balance be not paid by noon of the fifteenth day after the sale, reckoning the day of sale as one, or if that day be a close holiday, then by noon of the first succeeding office day, the sale is to be cancelled (the sum deposited being forfeited to Government), and the estate to be again put up to sale at the risk of the defaulting purchaser, after issue of advertisement, as in the case of original sale—

Number on the district roll.	Name of estate and pargana.	APPROXMIATE AREA—		Government revenue assessed.	REMARKS.
		In bighas.	In acres.		
1	2	3		4	5
		B. K. CH.	A. R. P.	Rs. A.	
944	Haridaskati, pargana Malui	1 13 0	0 2 13	1 2	

Collector's Office, Khulna, the 18th August 1902.

S. C. MUKERJEE, Collector.

NOTICE is hereby given, under sections 5 and 13, Act XI of 1859, that unless the arrears mentioned below are paid on or before the next latest date of payment, viz., the 28th September 1902, the undermentioned estates or shares of estates in the district of Muzaffarpur will be put up for sale at the office of the Collector of that district on the date to be fixed for the sale of the estates and shares in arrears of revenue for the kist of September 1902:—

Tausi No.	Name of mahal and pargana.	Sadar jama of whole estate.	Whether the whole estate is to be sold.	If only a share is to be sold, specification of such share or shares.	Names of proprietors and property to be sold.	If only a share is to be sold, the sadar jama of such share.	If the whole estate is to be sold, the arrears due from it.	If only a share is to be sold, the arrears due from it.	Nature and amount of demands for which to be sold.
1	2	3	4	5	6	7	8	9	10
280	Jarung Vishnath Singh, pargana Barail.	Rs. A. P. 566 9 1	The whole	.....	Babu Dabi Prosad Singh and others.	Rs. A. P.	Rs. A. P. 35 5 9	Rs. A. P.	Rs. 35-5-9 on account of arrears of land revenue due for kist June 1902.
2153 E.S.	Abul Hassanpur Manraj, Chakla Gurjaul, pargana Bisara.	810 3 6	.....	Residuary share— As. G. C. K. D. E. Abul Hassanpur... 10 0 0 0 0 0 Tejaul Buzrug ... 9 0 0 0 0 0 Rampur Pauni ... 16 0 0 0 0 0 Pauni-Jairam ... 16 0 0 0 0 0 Barahroop ... 9 12 0 0 0 0 Kanti ... 9 12 0 0 0 0 Barahroop Baharam ... 16 0 0 0 0 0 Ghataro Chatterbhooj ... 9 0 0 0 0 0 Ghataro Gopi Singh ... 9 0 0 0 0 0 Bahlolpur ... 16 0 0 0 0 0 Dherampur Jarung ... 9 0 0 0 0 0 Mohamadpur Rohua ... 16 0 0 0 0 0 Bhugwanpur Tand 13 4 0 0 0 0 Sherpur ... 13 4 0 0 0 0 Pertap Tand ... 5 17 1 1 0 0 Wafapur Banthoo 16 0 0 0 0 0 Rampur Banthoo 16 0 0 0 0 0 Bidhichundpur ... 16 0 0 0 0 0 Sangoputti ... 16 0 0 0 0 0 Chuk Mohamad Warris ... 13 4 0 0 0 0 Sinhwa Kalban ... 8 17 3 1 1 10	Rashbihari Singh and others.	538 1 11	.....	268 5 8	Rs. 268-5-8 due on account of arrears of revenue for the kists of March and June 1902, i.e., Rs. 133-15-4 for kist March 1902 and Rs. 134-6-4 for kist June 1902.

Muzaffarpur Collectorate, the 27th August 1902. E. V. LEVINGE, Collector.

[*Sale Notification under Section 7, Act XI of 1859.*]

Notification A.

NOTICE is hereby given, under sections 6 and 13, Act XI of 1859, that the undermentioned estates and shares of estates in the district of Patna will be put up for sale at the office of the Collector of that district on the 22nd September 1902 at 12 A.M. for arrears of revenue and other demands which by law are realisable as arrears of land revenue.

When in columns 5, 7 and 9 of the appended statement it is stated that only a share is to be sold, it is to be understood that a separate account is kept for that share.

Tausi No.	Name of mahal and pargana.	Sadar jama of the whole estate.	Whether the whole estate is to be sold.	If only a share is to be sold, specification of such share or shares.	Names of proprietors of property to be sold.	If only a share is to be sold, the sadar jama of such share.	If the whole estate is to be sold, the arrears due from it.	If only a share is to be sold, the arrears due from it.
1	2	3	4	5	6	7	8	9
		Rs. A. P.				Rs. A. P.	Rs. A. P.	Rs. A. P.
56	Damodarpur Beldha, pargana Pillich.	4,468 5 9	.....	4a. 16d. ijmal ... ... All other shares than that specified will be excluded from sale.	Lalan Sahu, Lachhoonan Sahu and others.	1,340 6 1	.....	947 1 3
169	Rampur Bedhna Nisf, pargana Bhimpur.	998 8 0	.....	16a. 8d. 13k. 6b. 10p. 1r. ijmal. All other shares than that specified will be excluded from sale.	Keshe Lal Vogairah...	963 1 6	.....	9 5 10
220	Salampur Ajaipur, pargana Beswak.	641 1 1	Entire ...	.....	Jia Ram	.....	39 15 6	.....
227	Shahpur Augari, mauze Shahpur Augari Chandipur Maijra Sitalpur, pargana Beswak.	5,334 6 5	Do. ...	.....	Iqbal Ali Khan Vogairah.	.....	6 5 10	.....
760	Sham Manohar Singh Emadpur Sahra Hatora, Khosropur ufrol, pargana Fatuyaspur.	1,098 3 9	.....	Sahra Hatora, 3a. 12d. 15k. 8b. 14p. 16r. 2t. 9 tilwasi 10 bat. Khosropur ufrol, 16a. ijmal ... All other shares than that specified will be excluded from sale.	Shah Khane Zad Husain Vogairah. Balmakund Singh Vogairah.	513 13 0	.....	14 4 10

J. G. CUMMING, Collector.

Sale Notice.

NOTICE is hereby given, under sections 6 and 13, Act XI of 1859, that the undermentioned estates and shares of estates in the district of 24-Parganas will be put up for sale at the office of the Collector of that district on the 22nd September 1902 at 12 o'clock noon for arrears of revenue and other demands which by law are realisable as arrears of land revenue.

When in columns 5, 7 and 9 of the appended statement it is stated that only a share is to be sold, it is to be understood that a separate account is kept for that share, and that the other share or shares are excluded from sale.

Class I.—Permanently-settled estates.

Consecutive No.	Tauzi No.	Name of pargana and mahal.	Sadar jama of the whole estate.	Whether the whole estate is to be sold.	If only a share is to be sold, the specification of such share.	Names of proprietors of property to be sold.	If only a share is to be sold, the sadar jama of such share.	If the whole estate is to be sold, the arrears due from it.	If only a share is to be sold, the arrears due from it.
1	2	3	4	5	6	7	8	9	10
			Rs. A. P.				Rs. A. P.	Rs. A. P.	Rs. A. P.
1	1	Magura, Chetla, and others.	5,422 12 3		Excluding 8a. share, the remaining 8a. share in each of the mouzas Sripore, Bagerkhola, and Rajumona chak; and excluding 3a. 4g. 2k. 12t. share, the remaining 12a. 15g. 3k. 1kr. 8t. share in all other mouzas will be sold.	Kali Chandra Roy Chowdhury and others.	3,928 5 3		391 6 11½
2	3/1	Magura, Nuskerpore ...	8,304 3 11½	,,	Excluding 10a. share, 6a. share will be sold.	Bindu Bashini Debi and another.	3,122 7 2½		148 13 11½
3	4	Magura, Kadamtolla, and others.	3,278 14 10	Whole ...	... .	Radha Binod Mandal and others.		199 14 4½	..
4	85	Magura, Amgachia	984 14 7		Excluding 7a. in mouza chak Kantalia, the balance 9a., excluding 2a. 1g. 2k. share in each of the mouzas Pahanpore and Nona, the remaining 13a. 18g. 2k., and the 10a. share in the other mouzas will be sold.	Haricharan Bose	861 11 10		874 11 8
5	106	Magura, Bagdaha	998 1 10½	Whole ...	. .	Narendra Kumar Bannerjee and others.	. .	35 6 8½	.
6	314	Muragacha, Harinarayanpur, and others.	12,312 13 4½		Excluding 8a. 8g. 0kg. 8t. 2k. 2kr. share, the balance 7a. 11g. 9kg. 11t. 1k 1kr. share will be sold.	Troylukho Nath Biswas and others.	5,747 9 3		47 11 0½
7	315/11	Muragacha, Raghunathpur, and others.	10,220 6 7	,,	Excluding 14a. 17g. 2k. share, the remaining 1a. 2g. 2k. share will be sold.	Apurba Kumari Dasi	721 3 0		139 5 11
8	885/9	Azimabad, Huda Ruskhali, and others.	10,424 8 1½		Out of 33 mouzas, excepting mouza Kangramuri, and excluding 14a. 17g. 2k. share, the balance 1a. 2g. 2k. share will be sold.	Ditto	1,362 8 7½		142 12 5½

Alipore, the 1st September 1902.

MAHANANDA GUPTA, *for* Collector, 24-Parganas.

Notification A.

NOTICE is hereby given, under sections 6 and 13, Act XI of 1859, that the undermentioned estates and shares of estates in the district of Backergunge will be put up for sale at the office of the Collector of that district on the 26th September 1902 at 12 o'clock for arrears of revenue and other demands which by law are realisable as arrears of land revenue.

When in columns 5, 7 and 9 of the appended statement it is stated that only a share is to be sold, it is to be understood that a separate account is kept for that share.

Tauzi No.	Name of mahal and pargana.	Sadar jama of the whole estate.	Whether the whole estate is to be sold.	If only a share is to be sold, specification of such share or shares.	Names of proprietors of property to be sold.	If only a share is to be sold, the sadar jama of such share.	If the whole estate is to be sold, the arrears due from it.	If only a share is to be sold, the arrears due from it.
1	2	3	4	5	6	7	8	9
		Rs. A. P.				Rs. A. P.	Rs. A. P.	Rs. A. P.
1094	Taluq Biswa Nath Sen, of pargana Khanya Bahadurnager.	570 6 11½	Whole estate.	... ..	Ram Narain Sen and others.	.....	142 6 9	... ..
2749	Taluq Durga Gangeswar of pargana Uttar Sahabazpur.	1,037 11 2½	..	Separate account No. 1 for 8 annas' share.	Guru Prosanna Roy and others.	518 13 8	.....	54 6 5
4034	Char Surikol of pargana Jazira.	3,441 11 3	Whole estate.		Mr. G. L Garth and Mr. H. L. Weatheral, trustees to the estate of Tojambal Ali Choudhury and others.	...	2,841 11 3	.....
4088	Char Jahapur of pargana Jazira.	5,000 0 0	Ditto .	.....	Ditto ...	.. .	300 0 0	.....
5235	Gai Makarari, howla No. 1, of Char Tabgi of pargana Dakshin Sahabazpur.	3,677 0 0	Whole howla.	.....	Basanta Kumar Guha ...	.....	460 0 0	... .

Backergunge Collectorate, the 31st July 1902.

D. WESTON, Collector.

Notification A.

NOTICE is hereby given, under sections 6 and 13, Act XI of 1859, that the undermentioned estates and shares of estates in the district of Gaya will be put up for sale at the office of the Collector of that district on the 25th September 1902 at 12 A.M. for arrears of revenue and other demands which by law are realisable as arrears of land revenue.

When in columns 5, 7, and 9 of the appended statement it is stated that only a share is to be sold, it is to be understood that a separate account is kept for that share, and that the other share or shares in the estate are excluded from the sale.

Tauzi No.	Name of mahal and pargana.	Sadar jama of whole estate.	Whether the whole estate is to be sold.	If only a share is to be sold, specification of such share or shares.	Names of proprietors of property to be sold.	If only a share is to be sold, the sadar jama of such share.	If the whole estate is to be sold, the arrears due from it.	If only a share is to be sold, the share due from it.
1	2	3	4	5	6	7	8	9
1453	Deobaghora, pargana Charkawan.	Rs. A. P. 15,150 15 0	... ...	The residuary ijmali share, exclusive of the separated share, consisting of— A. P. 1. Adri Kusa ... ... 16 0 2. Badopore ... ... 1 0 3. Charkupa ... ... 0 3 4. Budhua Dia ... ... 16 0 5. Dagaria Chak ... ... 16 0 6. Totaria Pawai Buzurg ... ... 16 0 7. Tawakal bigha ... ... 8 0 8. Aurawan 1 0	Jawahir Lal and others.	Rs. A. P. 603 14 0	Rs. A. P.	Rs. A. P. 2,831 4 7
4548	Gurua taluka, pargana Sherghatti.	15,007 14 0	Entire ...	... ...	Sheikh Mosaheb Ali and others.	.....	12,206 6 1	.....
4570	Jaipore Dumrawan, pargana Sherghatti.	4,808 8 0	.....	The residuary ijmali share, exclusive of the separated shares, consisting of— A. P. 1. Jaipore Dumrawan ... ... 8 0 2. Akhowri Khap ... ... 8 0 3. Pindra ... ... 8 0 4. Zaree Khap ... ... 8 0 5. Doudpore urf Pandowl ... ... 8 0 6. Deoghar Khap ... ... 4 0 7. Ibrahimpore ... ... 8 0 8. Hardia ... ... 8 0 9. Jadoo Khap urf Jagdeo Khap ... 8 0 10. Ghorjara Kalan ... ... 8 0 11. Kolhua ... ... 8 0 12. Lokeo Khap ... ... 8 0 13. Makhdumpore ... ... 8 0 14. Majhar ... ... 8 0 15. Makhu Khap ... ... 8 0 16. Adham Khap ... ... 10 8 17. Siwani Chak ... ... 8 0 18. Sisai urf Tesari ... ... 8 0 19. Basar Khap 4 0	Mussamat Fakhrunnisa Begam *alias* Nanhi Begam and others.	1,231 12 0	.....	983 0 9
4579	Ditto ..	4,898 8 0	... ...	Separate account No. I, consisting of the following shares:— A. P. 1. Jaipore Dumrawan ... ... 5 4 2. Alahdadpore urf Punowl ... ... 5 4 3. Akhowri Khap ... ... 5 4 4. Amba Dih ... ... 5 4 5. Pindra ... ... 5 4 6. Bagha Khap ... ... 5 4 7. Badar Khap ... ... 5 4 8. Banian ... ... 5 4 9. Baraundh ... ... 5 4 10. Zaree Khap ... ... 5 4 11. Doudpore urf Pandowl ... ... 5 4 12. Dabur Chak ... ... 5 4 13. Deoghar Khap ... ... 5 4 14. Ibrahimpore ... ... 5 4 15. Hardia ... ... 5 4 16. Jadu Khap urf Jagdeo Khap ... ... 5 4 17. Ghorjara Kalan ... ... 5 4 18. Kolhua ... ... 5 4 19. Loki Khap ... ... 5 4 20. Makhdumpore ... ... 5 4 21. Manjhar ... ... 5 4 22. Naudiha ... ... 5 4 23. Adham Khap ... ... 5 4 24. Sugaria ... ... 5 4 25. Salempore ... ... 5 4 26. Sirsani Chak ... ... 5 4 27. Sahdeo Khap ... ... 5 4 28. Basir Khap 5 4	Khajeh Ubaidullah urf Nanhu Nawab and others.	1,179 10 0	.....	25 10 4
987	Pankerdih Mallhari taluka, pargana Sherghatti.	15,997 14 0	.....	The residuary ijmali share, exclusive of the separated shares, consisting of— A. D. K. B. P. B. R. N. P. H. 1. Amnabad Hissa ... 3 5 15 6 14 0 0 0 2. Alinagar ... ... 1 10 17 6 11 0 0 0 3. Adampore ... ... 6 2 14 0 0 0 0 0 4. Bishunpore ... ... 0 1 17 19 19 2 0 0 5. Bara Dumri Baharguin ... ... 1 4 1 0 0 0 0 0 6. Bazid Chak ... ... 1 4 1 0 0 0 0 0 7. Bara Khar ... ... 3 5 15 6 14 0 0 0 8. Barah Kurwa ... 4 18 12 19 0 0 0 0 9. Baliari ... ... 3 5 15 6 13 6 14 0 10. Binaek ... ... 3 13 10 15 0 0 0 0 11. Bolwar ... ... 0 14 12 5 4 0 0 0 12. Baghi-bar ... ... 4 0 10 0 0 0 0 0 13. Basaita Khurd ... 3 13 19 15 0 0 0 0 14. Bafaspore ... ... 1 0 7 17 16 7 0 0 15. Bardih ... ... 1 0 17 1 19 10 0 0 16. Baha ... ... 1 15 14 15 4 10 0 0 17. Baghauta ... ... 1 4 1 0 0 0 0 0 18. Bikopore ... ... 0 4 2 4 3 7 0 0 19. Bara Khurd ... 2 6 7 3 3 5 14 0 20. Belsara ... ... 3 5 15 6 14 0 0 0 21. Bhagia ... ... 2 8 9 16 2 10 0 0 22. Chuan bar ... ... 0 10 17 16 4 7 10 0 23. Chhakarbandha Biraj ... 0 15 4 0 0 0 0 0 24. Champore 4 13 8 0 0 0 0 0	Mussamat Ahmunnissa Bibi and others.	1,348 7 0	.....	1,273 8 10

Tauzi No.	Name of mahal and pargana.	Sadar jama of whole estate.	Whether the whole estate is to be sold.	If only a share is to be sold, specification of such share or shares.	Names of proprietors of property to be sold.	If only a share is to be sold, the sadar jama of such share.	If the whole estate is to be sold, the arrears due from it.	If only a share is to be sold, the arrears due from it.
1	2	3	4	5	6	7	8	9
		Rs. A. P.		A. D. K. B. P. R. EN. PN.		Rs. A. P.	Rs. A. P.	Rs. A. P.
				25. Dharhara 0 0 10 6 19 19 13 6½				
				26. Dhanawan 2 9 6 10 0 0 0 0				
				27. Dumrawan 7 1 14 14 3 14 0 0				
				28. Delho Kamalpore ... 2 13 17 14 9 10 0 0				
				29. Dhibra Bodi Chak 3 1 7 0 0 0 0 0				
				30. Dighasin 2 9 1 10 0 0 0 0				
				31. Dubhal Kalan and Khurd 1 4 1 0 0 0 0 0				
				32. Deori Khas 1 18 6 10 0 0 0 0				
				33. Deoria 4 18 18 0 0 0 0 0				
				34. Guhi 0 0 10 6 19 13 6 5				
				35. Guhi Doem 0 0 10 6 19 13 6 5				
				36. Guhi Seum 0 0 10 6 19 13 6 5				
				37. Gangti Mangarganth 1 4 1 0 0 0 0 0				
				38. Gordiha 0 0 13 0 0 0 0 0				
				39. Hahranj Pathra ... 0 12 15 0 0 6 0 0				
				40. Jaspore 10 9 6 10 0 0 0 0				
				41. Jiwan Chak 4 9 16 6 13 6 14 0				
				42. Jagarnathpore ... 6 2 14 0 0 0 0 0				
				43. Jharha malu Chatti Imamganj ... 0 0 0 0 12 16 0 0				
				44. Jalwar 0 1 7 0 0 0 0 0				
				45. Jamuna 3 3 0 8 17 16 0 0				
				46. Karamdih 8 0 0 0 0 0 0 0				
				47. Kanchanpore ... 0 0 0 6 19 19 13 6				
				48. Karasan Chak Debi Das 4 2 4 3 4 0 0 0				
				49. Karasan Ledha ... 4 2 4 3 4 0 0 0				
				50. Kamat Chak ... 3 5 15 6 13 6 14 0				
				51. Khaira Pokhar Kushalpore ... 4 15 13 0 0 0 0 0				
				52. Karma 3 17 13 0 0 0 0 0				
				53. Kothi Khas ... 0 4 2 4 3 7 0 0				
				54. Karangarh 1 14 14 13 12 16 14 0				
				55. Karhani 3 5 15 6 14 0 0 0				
				56. Kajar 1 4 1 0 0 0 0 0				
				57. Kolsand Paroria ... 6 2 14 0 0 0 0 0				
				58. Kundri 6 2 14 0 0 0 0 0				
				59. Keola Kalan ... 4 15 13 0 0 0 0 0				
				60. Kathowtia 0 12 0 10 0 0 0 0				
				61. Londa 4 0 6 3 4 0 0 0				
				62. Lawahar Sondih ... 5 2 16 13 12 16 14 0				
				63. Mahasingh Chak ... 0 0 10 6 19 13 6½ 0				
				64. Manjhowlia ... 1 4 1 0 0 0 0 0				
				65. Mircha Dadopore ... 2 9 6 10 0 0 0 0				
				66. Maira 3 1 5 18 6 14 0 0				
				67. Monabar 1 4 1 0 0 0 0 0				
				68. Mahulan 4 15 13 0 4 2 0 0				
				69. Murarpore 2 11 19 2 19 10 0 0				
				70. Nowdiha 4 15 13 0 0 0 0 0				
				71. Nonai Chak Motha 4 16 15 0 0 0 0 0				
				72. Nohta Paduma ... 0 0 0 0 10 0 0 0				
				73. Nohar 2 19 0 14 3 14 0 0				
				74. Pathra Badrohia ... 0 0 0 1 2 16 0 0				
				75. Pira Chak 0 0 10 6 19 13 6½ 0				
				76. Pandaria 0 1 17 19 19 19 2 0				
				77. Pandari 6 2 14 0 0 0 0 0				
				78. Panti 0 14 13 5 0 0 0 0				
				79. Pipra Neyamat ... 4 15 13 0 0 0 0 0				
				80. Pakri Soha 0 9 17 6 10 6 0 0				
				81. Pakri 2 0 13 16 6 17 0 0				
				82. Powra Hissa ... 16 0 0 0 0 0 0 0				
				83. Rajpore Pokhraha 3 8 10 0 0 0 0 0				
				84. Rabda 2 16 11 17 5 0 0 0				
				85. Rengania 1 4 13 5 0 0 0 0				
				86. Shoram Chak ... 4 13 16 15 9 0 14 0				
				87. Sherghatti khas ... 1 4 1 0 0 0 0 0				
				88. Sugisote 0 14 5 4 19 10 0 0				
				89. Salaiya 5 0 11 0 0 0 0 0				
				90. Sehna 0 15 15 18 12 10 0 0				
				91. Seoti 1 4 1 10 10 0 0 0				
				92. Sidpore 3 1 12 0 1 0 0 0				
				93. Salaiya 8 0 13 6 14 0 0 0				
				94. Salaiya urf Sildiha... 1 4 1 0 0 0 0 0				
				95. Tilaiya 1 2 9 13 16 5 0 0				
				96. Tikri Chak 3 5 15 6 13 6 14 0				
				97. Tarndih 1 4 14 0 0 0 0 0				
				98. Tandwa 1 4 1 0 0 0 0 0				
				99. Itawan 0 14 4 3 5 19 13 14				
				100. Simri chak 1 2 15 4 7 0 0 0				
5087	Khokhri Balayari Mahammadpore Mahammad Hasa Haftum, pargana Sonout.	1,098 11 0	.....	The residuary ijmali share, exclusive of the separated share, amounting to 13 annas 8 pies, will be sold.	Maulvi Sheikh Waisuddin Husein and others.	878 15 0	.....	48 0 0
6040	Adopore, pargana Kabar.	1,196 0 0	Entire ...	.....	Bhekha Sing and others.		90 8 0	.....

Gaya Collectorate, the 1st September 1902.

A. MELLOR, *for* Collector.

Notification B.

NOTICE is hereby given, under sections 5 and 13, Act XI of 1859, that unless the arrears mentioned below are paid on or before the next latest date of payment, viz. the 29th September 1902, the undermentioned estates or shares of estates in the district of Midnapore will be put up for sale at the office of the Collector of that district on the 18th October 1902 at 12 A.M. for the said arrears.

When in columns 5, 7 and 9 of the appended statement it is stated that only a share is to be sold, it is to be understood that a separate account is kept for that share, and that the other share or shares in the estate are excluded from the sale.

Tauzi No.	Name of mahal and pargana.	Sadar jama of the whole estate.	Whether the whole estate is to be sold.	If only a share is to be sold, specification of such share or shares.	Names of proprietors of property to be sold.	If only a share is to be sold, the sadar jama of such share.	If the whole estate is to be sold, the arrears due from it.	If only a share is to be sold, the arrears due from it.	Nature and amount of demand for which to be sold.
1	2	3	4	5	6	7	8	9	10
2710	Pargana Jalamuta, mahal Jalamuta.	Rs. A. P. 1,26,768 8 10	Entire .	.....	Srimati Haripriya Debi.	Rs. A. P.	Rs. A. P. 27,727 3 6	Rs. A. P.	Arrears for Jan. 1902, Rs. 27,727-3-6.

Midnapore Collectorate, the 2nd September 1902. H. LUSON, Collector of Midnapore.

Notification A.

NOTICE is hereby given, under sections 6 and 13, Act XI of 1859, that the undermentioned estates and shares of estates in the district of Tippera will be put up for sale at the office of the Collector of that district on the 26th September 1902 at 12 o'clock for arrears of revenue and other demands which by law are realisable as arrears of land revenue.

When in columns 5, 7 and 9 of the appended statement it is stated that only a share is to be sold, it is to be understood that a separate account is kept for that share.

Tauzi No.	Name of mahal and pargana.	Sadar jama of whole estate.	Whether the whole estate is to be sold.	If only a share is to be sold, specification of such share or shares.	Names of proprietors of property to be sold.	If only a share is to be sold, the sadar jama of such share.	If the whole estate is to be sold, the arrears due from it.	If only a share is to be sold, the arrears due from it.
1	2	3	4	5	6	7	8	9
285	Taluq Sribatsha Das, pargana Gunanundi.	Rs. A. P. 1,233 11 7	Whole ...	.....	Srimati Monyakhoya Chowdhurani, manager on behalf of minor Harendra Chandra *alias* Har Kumar Pal Chowdhury and others.	Rs. A. P.	Rs. A. P. 18 12 2	Rs. A. P. .....
430	Gazipur Monipur Chur No. 24-71, pargana Maizardi.	1,233 1 0	Do. ...	.....	Kashi Chandra Pal Chowdhury and others.	.....	84 14 4	.....
1925	Char near Nogarerkandi No. 211, pargana Utter-shahapur.	1,296 10 9	Do. ...	.....	Ishan Chandra Dutt and others.	...	202 9 4	.....
1933 21	Pargana Bardakhat Doulatpurjoar: the term is from 1261 to 1310 B.S.	1,379 3 10	Do. ...	.....	Bepra Charan Ghosh and others.	.....	173 1 0	.....
2209	Shonapur Tajpur, pargana Ezaira.	876 10 0	Do. ...	.....	Tojammal Ali Chowdhury and others.	.....	200 0 0	.....

Tippera Collectorate, the 26th July 1902. H. W. SCHOOPE, Collector.

Notice of Lease of Waste Lands in the Sundarbans, under Rule 19, Section 11 of the Waste Lands Manual, 1898.

NOTICE is hereby given that the lease of the land specified in the schedule hereto annexed, and of which the plan is open to inspection at the office of the Commissioner of the Sundarbans, has been applied for by Shomsher Khan Chowdhury, and will be sold at 12 o'clock noon on the 8th of December 1902, Monday, at the Sundarbans Commissioner's office at Alipur, unless meantime the sale is stopped or postponed in consequence of claims or objection under Act XXIII of 1863 (to provide for the adjudication of claims to waste lands), or owing to any other cause.

2. The lease of the land will be granted subject to the conditions which are specified below, as well as to the general terms annexed to the Rules for the Sale of Leases of Waste Lands in the Sundarbans of the 24-Parganas, Khulna, and Backergunge, dated 12th November 1879.

Conditions.

That the land shall be subject to all existing rights of way and water and other easements.

That the right of using all streams and channels in any way navigable shall be reserved to the public, as also the use of a tow-path not less than 25 feet in width on each side of every such stream and channel.

That no charge will be made for wood and timber standing on the land at the time it is leased, nor for any wood which may be cut and burnt to effect clearances, or which may be used on the land; but for wood and timber exported for sale a duty shall be levied at such rate and in such manner as may, from time to time, be prescribed by Government.

That the Government reserves to itself the right to all minerals on the land, together with such rights of way and other reasonable facilities as may be requisite for working, getting, and carrying away such minerals. It also

retains its proprietary right in the land, and only confers on the lessee an occupancy right, which shall be hereditary and transferable.

Schedule.

Number of lot.	District, subdivision, and thana.	Area.	Boundaries.
Lot No. 162, second portion.	24-Parganas, Basirhat, Hosseinabad.	Bighas. 6,097	*North.*—By a portion of the Gumti khal, which falls into the Kalindi river. *East.*—By a portion of the Kalindi river. *South.*—By a line bearing 241° drawn from a point on the west bank of the Kalindi river up to a point on the east bank of the Sogunkhali khal, which falls into the Raimongal river, and by a portion of the said Sogunkhali khal up to its junction with the Chingradhopa or Koriar khal. *West.*—By a portion of the Chingradhopa or Koriar khal and by a line bearing 26° drawn from a point on the north bank of the Chingradhopa or Koriar khal to a point on the south bank of the Gumti khal. All the above boundaries are as shown in Sundarbans Commissioner Mr. Sunder's map of season 1901-1902.

Alipur, the 5th September 1902. D. SUNDER, Commissioner in the Sundarbans, Bengal.

Notice of Lease of Waste Lands in the Sundarbans, under Rule 19, Section 11 of the Waste Lands Manual, 1898.

NOTICE is hereby given that the lease of the land specified in the schedule hereto annexed, and of which the plan is open to inspection at the office of the Commissioner of the Sundarbans, has been applied for by Kali Krishna Adock, and will be sold at 12 o'clock noon on the 8th of December 1902, Monday, at the Sundarbans Commissioner's office at Alipur, unless meantime the sale is stopped or postponed in consequence of claims or objection under Act XXIII of 1863 (to provide for the adjudication of claims to waste lands), or owing to any other cause.

2. The lease of the land will be granted subject to the conditions which are specified below, as well as to the general terms annexed to the Rules for the Sale of Leases of Waste Lands in the Sundarbans of the 24-Parganas, Khulna, and Backergunge, dated 12th November 1879.

Conditions.

That the land shall be subject to all existing rights of way and water and other easements.

That the right of using all streams and channels in any way navigable shall be reserved to the public, as also the use of a tow-path not less than 25 feet in width, on each side of every such stream and channel.

That no charge will be made for wood and timber standing on the land at the time it is leased, nor for any wood which may be cut and burnt to effect clearances, or which may be used on the land; but for wood and timber exported for sale a duty shall be levied at such rate and in such manner as may, from time to time, be prescribed by Government.

That the Government reserves to itself the right to all minerals on the land, together with such rights of way and other reasonable facilities as may be requisite for working, getting, and carrying away such minerals. It also retains its proprietary right in the land, and only confers on the lessee an occupancy right, which shall be hereditary and transferable.

Schedule.

Number of lot.	District, subdivision, and thana.	Area.	Boundaries.
G Plot, fifth portion.	24-Parganas, Diamond Harbour, Mathurapur.	Bighas. 5,856	*North.*—By a portion of the Kankramari khal, which falls into the Subtermukhi river, and by a line bearing 90° drawn from the east bank of the Kankramari khal to a point on the west bank of the Jagadal river. *East.*—By a portion of the Jagadal river. *South.*—By a line bearing 270° drawn from a point on the west bank of the Jagadal river to a point on the east bank of the Subtermukhi river. *West.*—By a portion of the Subtermukhi river. These boundaries are given from late Sundarbans Commissioner Mr. Ross' map of season 1899-1900.

Alipur, the 5th September 1902. D. SUNDER, Commissioner in the Sundarbans, Bengal.

Notice of Lease of Waste Lands in the Sundarbans, under Rule 19, Section 11 of the Waste Lands Manual, 1898.

NOTICE is hereby given that the lease of the land specified in the schedule hereto annexed, and of which the plan is open to inspection at the office of the Commissioner of the Sundarbans, has been applied for by Gobordhon Adock, and will be sold at 12 o'clock noon on the 8th of December 1902, Monday, at the Sundarbans Commissioner's office at Alipur, unless meantime the sale is stopped or postponed in consequence of claims or objection under Act XXIII of 1863 (to provide for the adjudication of claims to waste lands), or owing to any other cause.

2. The lease of the land will be granted subject to the conditions which are specified below, as well as to the general terms annexed to the Rules for the Sale of Leases of Waste Lands in the Sundarbans of the 24-Parganas, Khulna, and Backergunge, dated 13th November 1879.

Conditions.

That the land shall be subject to all existing rights of way and water and other easements.

That the right of using all streams and channels in any way navigable shall be reserved to the public, as also the use of a tow-path not less less than 25 feet in width on each side of every such stream and channel.

That no charge will be made for wood and timber standing on the land at the time it is leased, nor for any wood which may be cut and burnt to effect clearances, or which may be used on the land; but for wood and timber exported for sale a duty shall be levied at such rate and in such manner as may, from time to time, be prescribed by Government.

That the Government reserves to itself the right to all minerals on the land, together with such rights of way and other reasonable facilities as may be requisite for working, getting, and carrying away such minerals. It also retains its proprietary right in the land, and only confers on the lessee an occupancy right, which shall be hereditary and transferable.

Schedule.

Number of lot.	District, sub-division, and thana.	Area.	Boundaries.
Lot No. 183, eighth portion.	24-Pargana, Basirhat, s Hosseinabad.	Bighas 3,793	*North.*—By the Mittakhali khal, which falls into the Raimongal river, and by a line bearing 96° drawn from a point on the east bank of the Mittakhali khal to a point on the west bank of the Nonabhuinya khal. *East.*—By a portion of the Nonabhuinya khal. *South.*—By a portion of the Raimongal river. *West.*—By a portion of the Raimongal river. All the above boundaries are as shown in Sundarbans Commissioner Mr. Sunder's map of season 1901-1902.

Alipur, the 5th September 1902.

D. SUNDER, Commissioner in the Sundarbans, Bengal.

Statement of the Affairs of the Bank of Bengal for the week ending 2nd September 1902.

LIABILITIES.

	Rs.	A.	P.
Capital paid up	2,00,00,000	0	0
Reserve Fund	1,14,00,000	0	0
Public Deposits at Head Office ... ... Rs. 90,06,771 0 3			
Ditto ditto at Branches „ 1,22,82,000 11 1	2,12,88,771	11	4
Other Deposits at Head Office and Branches ...	8,26,63,923	0	1
Bank Post Bills, &c.	3,71,975	6	4
Sundries	14,67,743	12	2
Rupees ...	16,71,82,413	13	11

ASSETS.

	Rs.	A.	P.
Government securities	1,42,64,094	0	0
Other authorised investments	67,81,670	0	0
Loans on Government and other authorised securities	2,21,79,515	6	8
Accounts of credit on ditto ditto	1,55,86,798	3	10
Bills discounted and purchased	2,04,87,971	14	2
Balances with other Banks	19,43,405	0	5
Bullion	22,617	0	7
Dead Stock	16,04,372	10	6
Stamps	12,384	13	6
Sundries	8,39,400	4	9
	8,87,22,179	5	11
Cash & Currency Notes at Head Office* ... Rs. 2,33,28,492 1 7			
Cash & Currency Notes at Branches† ... „ 8,01,31,742 6 5	5,34,60,234	8	0
Rupees ...	13,71,82,413	13	11

* Includes Sovs. and ½ Sovs., value Rs. 1,51,950 0 0
† Do. do. do. „ 1,75,672 8 0
Rs. 3,27,622 8 0

BANK OF BENGAL,
Calcutta, the 4th September 1902.

E. J. BINCH, Chief Accountant.
Rate for Demand Loans 3 per cent.
Percentage 50·53.

By order of the Directors,
W. D. CRUICKSHANK,
Secretary and Treasurer.

(614—1)

Statement of Government Promissory Notes enfaced for payment of Interest in London, under deduction of amount retransferred to India, and outstanding in the books of the Bank of Bengal on the 31st August 1902.

PARTICULARS.	3 per cent of 1896-97.	3½ PER CENT. LOANS—							4 PER CENT. LOANS—							4½ PER CENT. LOANS—				GRAND TOTAL.
		Of 1842-43.	Of 1854-55.	Of 1865.	Of 1879.	Of 1893-94.	Of 1900-1901.	Total.	Of 1832-33.	Of 1835-36.	Of 1842-43.	Of 1854-55.	Transfer of 1865.	Reduced 4 per cent. loan of 1879.	Total.	Of 1870.		Transfer loan of 1879, 4½ per cent. portion.	Total.	
Balance of 15th August 1902	1,58,02,000	2,20,33,400	11,67,26,200	3,01,65,000	1,30,70,600	100	22,58,300	18,48,53,000	6,934	5,000	.....	15,500	40,800	5,700	73,934	5,000	...	29,500	34,500	20,01,63,434
ADD—																				
Amount of 3½ per cent. 1854-55 couponed notes transferred to London	.....	... ..	2,48,000	.....	.....	.....	.....	2,48,000	.....	.....	.....	.....	.....	.....	.....	.....	...	.....	.....	2,48,000
Amount enfaced at Madras up to 17th August 1902 ..	.....	. ...	... ..	.....	.....	.....	.. ..	.....	.....	.....	.....	.....	.....	.....	.....	.....	...	.....	.....	.... .
Amount enfaced at Bombay up to 21st August 1902	.....	.	2,00,000	.....	.....	.....		2,00,000	.....	... ..	.....	.....	... .	.....	.....	...	...	.. ...	... ..	2,00,000
Amount enfaced at Calcutta between 16th and 31st August 1902	.....	2,000	4,21,000	17,000	.... .	... .	77,000	5,24,000	.....	.....	... ..	.....	.....	.....	.....	.....	...	.....	.....	5,24,000
	1,58,02,000	2,20,42,400	11,75,95,200	3,01,82,000	1,30,70,600	100	23,35,300	18,52,25,000	6,934	5,000	.....	15,500	40,800	5,700	73,934	5,000	...	29,500	34,500	20,11,33,434
DEDUCT—																				
Amount written off in the London registers ...	.....	7,30,200	85,500	37,000	10,600	.....	4,50,000	13,12,700	.....	.....	.....	.....	.....	.....	.....	.....	...	.....	.....	13,12,700
Balance on 31st August 1902	1,58,02,000	2,13,12,200	11,75,09,700	3,01,45,000	1,30,60,000	100	18,85,300	18,39,12,300	6,934	5,000	.....	15,500	40,800	5,700	73,934	5,000	...	29,500	34,500	19,98,22,734

NOTE.—From 9th June 1867 to 30th June 1902—Enfaced from India 11,111 lakhs ; retransferred from London 10,465 lakhs.
" 1st July 1902 " 15th July " " " " 4 " " " " " 11 "
" 16th " " " 31st " " " " " 15 " " " " " 4 "
" 1st August " " 14th August " " " " " 3 " " " " " 7 "
" 16th " " " 31st " " " " " 10 " " " " " 13 "
11,142 lakhs 10,660 "
10,500 "
Balance against India 642 "

E. HILDRETH, *Superintendent.*

W. D. CRUICKSHANK, *Secretary and Treasurer.*

(613—1)

PUBLIC DEBT OFFICE, BANK OF BENGAL,

Calcutta, the 2nd September 1902.

In the Court of the Subordinate Judge, 1st Court, Gaya.

EXECUTION CASE No. 171 of 1896.

Mr. Osmond Beeby, Administrator to the estate of Dhakhna Mohan Rai, deceased, decree-holder, *versus* Babu Chuni Lal Bose, Administrator to the estate of Raja Ran Bahadur Singh, deceased, judgment-debtor.

TO be sold on Monday, the 15th September 1902, at 12 A.M in the Civil Court sale room by the Nazir of the District Judge's Court, Gaya, the following mortgaged properties for satisfaction of decree, amounting to Rs. 68,257-11-6 :—

Former number tauzi.	Present number tauzi.	Jama sadar of the entire mahal.	Name of mahal.	Properties to be sold and the pargana in which they are situated.	Approximate value of the property.
		Rs.			Rs.
2357	4100	24,783	Deokli, pargana Pahra, zilla Gaya.	Entire 16 annas Deokli khas, pargana Pahra, zilla Gaya	5,000
2357	4100	24,783	Ditto ...	Entire 16 annas mauza Diha, pargana Pahra, zilla Gaya	
2357	4100	24,783	Ditto ...	Entire 16 annas mauza Mohamedpur, pargana Pahra, zilla Gaya.	
2357	4100	24,783	Ditto ..	Entire 16 annas mauza Sherpur, pargana Pahra, zilla Gaya.	
2357	4100	24,783	Ditto ...	Entire 16 annas mauza Dadenpur, pargana Pahra, zilla Gaya.	

Gaya, the 1st September 1902. UPENDRA NATH BASU, Subordinate Judge, 1st Court, Gaya.

(618—1)

Notice.

SEALED TENDERS for the conveyance of import, export and other Government stores, and for labour and the hire of boats for two periods—one of 1 year 3 months, from 1st January 1903 to 31st March 1904, and one for 3 years 3 months, from 1st January 1903 to 31st March 1906—will be received by the Agent for Government Consignments, Calcutta, up to noon on Friday, the 3rd October 1902.

Tenders should be superscribed "Tender for carrying contract for one year and three months" and "three years and three months," as the case may be.

Tenders must be prepared on forms to be obtained with full particulars from the undersigned on payment of one rupee for each form.

No tender will be received except on the prescribed form, and no additions or alterations must be made on the tender form.

Tenders must be supported by a Bank of Bengal or Treasury receipt for Rs. 700 as earnest-money. The earnest-money to be forfeited in the event of a tender withdrawn No tender will be received without a deposit of this earnest-money.

Tenders will be opened at noon on Friday, October 3rd, 1902, at No. 5 Strand Road, in the presence of tenderers by the undersigned, who does not bind himself to accept the lowest or any tender.

H. J. PATERSON, LIEUT., R.N.R.,
Offg. Agent for Govt. Consignments.

Calcutta, the 25th July 1902.

Notice.

SEALED TENDERS in Form No. 2 are invited for the manufacture of six lakhs of bricks at Balurghat, in Dinajpur district, for the construction of subdivisional buildings, to be delivered within 15th February 1903 there. The brick clay must be pugged in pug mills and moulded on tables and the burnt first class bricks must measure $9\frac{3}{4}'' \times 4\frac{1}{4}'' \times 2\frac{3}{4}''$. Rs. 720 to be deposited in the Dinajpur Treasury as earnest-money and the receipted challan annexed with the tender.

Tenders will be received up to the forenoon of the 15th September next, and the Superintending Engineer is not bound to accept the lowest or any tender.

ATULKRISHNA MUKERJEE,
District Engineer, Dinajpur.

District Engineer's Office, Dinajpur, the 27th August 1902.

Notice.

SEALED TENDERS are invited in District Board Form No. 3 for the construction of a Hospital in Barisal Jail. The estimated cost, inclusive of contingencies and excluding the cost of unskilled labour to be supplied by the Jail Department, is Rs 33,141. The steel joists and Tees required for the building have been indented for and will be made over to the contractor at cost price. Jail Department will also supply the following materials at the rate noted against each on the work site :—

First class bricks at Rs. 14 per 1,000.
Ditto soorki „ 45 „ 100 maunds.
Ditto khoa „ 10 „ 100 cubic feet.

The plan and estimate of the work can be seen in office during usual office hours.

The work is to be commenced by the first week of November 1902 and completed within one year.

Tenders superscribed "Jail Hospital, Barisal," will be received by the undersigned up to 4 P.M. of Wednesday, the 17th September 1902, and will be opened at the office on that day.

Tenders must be accompanied by a Treasury challan showing the remittance of Rs 701 (seven hundred only) as earnest-money.

The right of rejecting the lowest or any tender is reserved.

JOGENDRA NATH GHOSH, District Engineer.

Barisal, the 4th September 1902.

Khunnah and Company, Limited.

NOTICE is hereby given, in pursuance of section 186 of the Indian Companies Act, 1882, that a General Meeting of the Members of the abovenamed Company will be held at 63-1 Cross Street, Calcutta, on Tuesday, the 21st day of October 1902, at 3 o'clock in the afternoon, for the purpose of having an account laid before them showing the manner in which the winding up has been conducted and the property of the Company disposed of, and of hearing any explanation that may be given by the Liquidator, and also of determining by extraordinary resolution the manner in which the books, accounts and documents of the Company and of the Liquidator thereof shall be disposed of.

Dated this 10th day of September 1902.

AMRITA KUMAR GHOSH, Liquidator.

(625—1090—1)

Pure Sulphate of Quinine.

MANUFACTURED AT THE BENGAL GOVERNMENT CINCHONA PLANTATION

FROM 1st April 1902 the price of this quinine will be as follows:—

1	Pound tin	Rs.	17,	or, post free,	Rs.	17-8
½	"	"	"	8-8	"	"	"	"	8-14.
¼	"	"	"	4-4	"	"	"	"	4-10

Analysis shows this quinine to be of the purest manufacture; and it is guaranteed to be free from wilful mixture with the inferior alkaloids, cinchonine and cinchonidine. It is for sale only to Government officers, and only for cash, and may be had from the Superintendent, Botanic Garden, Sibpur, near Calcutta

Cinchona Febrifuge.

Cinchona Febrifuge can be purchased by all Government officers and by any one taking *six pounds* and upwards at a time from the Superintendent, Botanic Garden, Calcutta, for cash only at the following rates—

	Government officers.	General public.	Postage extra.
	Rs. A.	Rs.	As.
1 Pound tin ...	10 0	12	8
½ " " ...	5 0	6	6
¼ " " ...	2 8	3	4

BABU NAGENDRA NATH MITRA, B.A., B.L., intends to enrol himself as a Vakil of the High Court, Bengal.

(546—4—101)

BEJAY KUMAR BHATTACHARJEE intends to be enrolled as a Vakeel, High Court.

(621—1086—4)

Wanted

A DRAFTSMAN on pensionable establishment at Rs 55 per month rising to Rs. 85 by five annual increments of Rs. 6 each, also an Estimator on pensionable establishment. Salary Rs. 75 per month fixed.

Only first class men who can prepare drawings and estimates from notes and instructions need apply, sending specimens of their drawings and copies of testimonials, which latter will not be returned.

Applications will be received by undersigned up to 15th September 1902.

C. A. WHITE,
Offg. Supdg. Engr., Orissa Circle.

Cuttack, the 29th August 1902.

Notice.

WANTED an Overseer for the Sadar subdivision under the District Board of Noakhali. Pay Rs. 70 and horse allowance Rs. 15 a month (he must keep a pony or a bicycle).

Candidates must possess qualifications under rule 7 (1) of Government Notification No. 3334L.S. G., dated 20th December 1901, and have experience in building works.

Applications with copies of testimonials will be received by the undersigned up to 15th September 1902.

The selected candidate must join at once on receipt of appointment letter.

H. F. E. B. FOSTER, Chairman.

Noakhali District Board's Office, the 25th August 1902. (602—2)

Notice.

WANTED an Engineer on a salary of Rs. 100 per mensem with free quarters. He will be chiefly in charge of the Raj Rajeswari Water-works. The applicants should state their age and native place, and produce certificates of health, character, and qualifications Applications will be received up to 15th of September 1902.

SHAMA CHARAN RAY, Chairman,
Nasirabad Municipality, Mymensingh.

Mymensingh, the 31st August 1902. (611—2)

Notice.

WANTED temporarily from November next—

1 Native Surveyor at Rs. 50 per month.
8 Native Surveyors at Rs. 40 each per month.
8 Amins at Rs. 35 each per month.
12 Amins at Rs. 20 each per month.

Applications will be received by the undersigned up to 21st October 1902.

JYOTISH CHANDRA SEN,
Deputy Collector in charge,
for Deputy Commissioner.

Jalpaiguri, the 4th September 1902.

Notice.

WANTED a Sub-Overseer under the District Board of Hazaribagh on a monthly salary of Rs. 50 *plus* fixed monthly horse allowance of Rs. 15. None need apply who is not qualified under Rule 7 (2) of the Rules published in Bengal Government Notification No. 3334L S.-G., dated 20th December 1901.

The applications will be received by the Chairman, District Board, up to 21st September 1902.

SYED KARAM HOSSAIN,
Vice-Chairman, District Board, Hazaribagh.

Hazaribagh, the 6th September 1902. (623—2)

Notice.

WANTED 12 Bengali-knowing Inspectors for the Sonthal Parganas Settlement.

Applicants must either have served in the Survey of India Department, or have certificates of their acquaintance with Offset Cadastral Survey work. Applicants should state their age and send their applications with copies of testimonials to the undersigned not later than 25th September.

H. MCPHERSON,
Settlement Officer, Sonthal Parganas.

Dumka, the 2nd September 1902,

Notice.

THE Government of Bengal, on the recommendation of the Port Commissioners, have sanctioned, under section 33 of the Port Commissioners' Act, IV (B C.) of 1887, the levy of a charge of Rs. 3 per diem for the use of each wire hawser and shackle supplied to vessels for mooring purposes.

R. S. GREENSHIELDS,
Chairman of the Port Commissioners.

Chittagong, the 21st August 1902. (592—3)

Lost

THE Government Promissory Note No. 008771, of the 3½ per cent. of 1854-55, for Rs. 500, originally standing in the name of Abinash Chandra Singha, the proprietor, by whom it was never endorsed to any other person. Payment of the above Note and the interest thereupon have been stopped at the Public Debt Office, Bank of Bengal, and application is about to be made for the issue of Duplicate in favour of the proprietor.

Name of Advertiser—NOGENDRA NATH MUKERJEE, Beadon Pharmacy, 343 Upper Chitpore Road, Calcutta.

(607—1085—3)

Shampore Coal Company, Ld.

A GENERAL meeting of the Company will be held at the Registered Office, No. 100, Clive Street, on Tuesday next, the 16th instant, at noon, in pursuance of section 75 of the Indian Companies Act of 1882 to transact such business as may be brought by the meeting.

GEO. HENDERSON & Co., Managing Directors and Secretaries.

Calcutta, the 9th September 1902.

(626—1091—1)

Notice.

UNDER the provisions of Rule XX, Part I of the Rules for the Care and Use of Government Cemeteries, the following Monuments, having become ruinous, will be treated at the next repairs in such manner as the Officer in charge of the Cemetery may decide to be necessary for the maintenance of the Cemetery in decent order, unless any person will undertake to bear the cost of repairs:—

OLD CEMETERY, BARRACKPORE.

Catherine Macvitie	...	1827
Sergt.-Major C. Finch	...	1815
Jane Vyall	...	1819
Lieut. T. Macan	...	1809
George Manley	...	1809
Ensign George Downie Cullen	...	1823
Capt. Birkett	...	1846
Norman Macleod	...	1824
William McCluskie	...	1824
Henry William Maylark	...	1860
Major James Grant	...	1859
Sergt.-Major John Henry Luncus	...	1839
Lieut.-Col. William Lally	...	1805
Elizabeth Frazer	...	1793
Mary Ann Farrel	...	1840
Harriot White	...	1816
Thomas Green White	...	1793
Emily Burrett	...	1842
Samuel Twemlow	...	1825
Lieut. E. C. Macpherson	...	1832
Lieut.-Col Clayton	...	1804
Sergt.-Major T. Holland	...	1850
Sarah Holland	...	1850
Capt. T Haslam	...	No date.
Robert Westfield	...	1805
Martin Goulder	...	1851
Isabella Goulder	...	1851
George Blundell	...	1839
Richard Bailey	...	1843
Elizabeth Bailey	...	1845
Richard Bailey	...	1839
Walter Pelham Burn	...	1854
Col. Charles Coventry	...	1854
James Lyle Algeo	...	No date.
Alice Jane Seymour	...	1856
Constance Ellinor Lance	...	1858
Charlotte Caroline Baker	...	1856
Maria Eliza Marshall	...	1860
James Athill Turner	...	1843
Sarah Mc ullum	...	1862
Susan Douglas Everard	...	1862
Theodora Elizabeth White	...	1866
Lieut. John Watson	...	1860
Charles Andrew McMullin	...	1862
Charles Sharp	...	1860
Mary James	...	1860
Capt. W. C. L. Ryves	...	1860
Lieut. Powell	...	1859
Major W. Sperling	...	1859
Capt. Philip Rubie	...	1860
Lieut. A H. Carter	...	No date.
Richard Clerke	...	1817
Fanny Sophia Prior	...	1857
Charlotte Mary Coley	...	1859
Mary Bertha Coley	...	1858

C. H. BARLOW, Chaplain.

Barrackpore, the 8th September 1902.

SALE NOTIFICATION.

In the Court of the District Judge of Shahabad.

EXECUTION CASE No. 18 OF 1902.

Lal Mohar Thakur and another, decree-holders, *versus* Ram Narain Singh and others, judgment debtors.

THE undermentioned properties will be sold by the Nazir of this Court on the 3rd November 1902 for the realization of Rs. 60,764-2-9:—

1. One anna and four pies of mahal Parsaura, pargana Behia, thana Belauti, bearing tauzi No. $\frac{366}{1162}$, and jama saddar Rs. 962-2-2; valued at Rs. 33.

2. Two annas and eight pies of mahal Dhobdiha, pargana Danwar, thana Dhangain, bearing tauz No. $\frac{2415}{5238}$, and jama saddar Rs. 1,137-1-1; valued at Rs. 2,800.

3. Two annas and eight pies of mauza Dhanchhuha, pargana Danwar, thana Dhangain, bearing tauzi No. $\frac{1911}{3552}$, and jama saddar Rs 2,059-14-8; valued at Rs. 1,750.

4. Two annas and eight pies of mahal Dhobdiha, pargana Sasaram, thana Kargahar, bearing tauzi No. $\frac{2415}{5238}$, and jama saddar Rs. 1,137-1-3; valued at Rs. 2,800.

5. Two annas and eight pies of mauza Dhanchhuha, pargaana Dhanar, thana Dhangain, bearing tauzi No. $\frac{1911}{3552}$, and jama saddar Rs. 2,059-14-8; valued at Rs 1,750.

6. Five annas and four pies of mauza Nawada Majharia, pargana Danwar, thana Dhangain, bearing tauzi No $\frac{1970}{3484}$, and juma saddar Rs. 1,162; valued at Rs. 6,000.

7 Five annas and four pies of mauza Pithui (*sic*), pargana Dinara, thana Dhangain, bearing tauzi No. $\frac{1999}{3636}$, and jama saddar Rs. 1,025-1-4; valued at Rs. 4, .00.

8. Five annas and four pies of mauza Pithwain, pargana Dinara, thana Dhangain, bearing tauzi No. $\frac{1999}{3636}$, and jama saddar Rs. 1,025-5-4; valued at Rs. 4,000.

9. Five annas and four pies of mauza Manipur, adjoining mahal Karari, pargana Dinara, thana Dhangain, bearing tauzi No. $\frac{1999}{3636}$, and jama saddar Rs. 2,025-5-4; valued at Rs. 5,000.

10. Five annas and four pies of mauza Chela, pargana Pawar, thana Arrah, bearing tauzi No. 4078, and jama saddar Rs. 4,725-15 7; valued at Rs. 2,500.

11. Five annas and four pies of mauza Chela, pargana Pawar, thana Arrah, bearing tauzi No. 4078, and jama saddar Rs. 4,725-15-7; valued at Rs. 2,500.

12. One anna and four pies of mahal Dhobdiha, pargana Danwar, bearing tauzi No. $\frac{2415}{5238}$, and jama saddar Rs. 1,137-1-1; valued at Rs. 2,400.

H. R. H. COXE, District Judge.

Shahabad Judge's Court, the 8th September 1902.

(627—1)

Corporation of Calcutta.

MUNICIPAL ELECTION.

NOTICE.

A VACANCY having occurred in the representation of Ward No. 19 (Entally), Mr John Laird having resigned his seat as a Commissioner, under section 62 of the Calcutta Municipal Act, III (B.C.) of 1899, it is hereby notified that the rate and tax-payers of the ward should proceed to elect a Commissioner for their ward for the unexpired portion of the term of the said Commissioner, i.e., up to 31st March 1903, or until such time as a successor shall have been legally elected.

The election will be held on Tuesday, the 30th day of September 1902, between the hours of 9 A.M. and 6 P.M. At a date not less than two or more than seven days before the date fixed for taking the poll, a post-card giving full particulars of the candidates, if more than one, will be posted to the address of each of the registered voters of the aforesaid ward. Intending candidates should send in their names to the Chairman not less than fourteen days before the day fixed for the election, duly proposed, seconded, and approved, as required by rule 2 of schedule 5 of the Calcutta Municipal Act, III (B.C.) of 1899.

R. T. GREER, Chairman.

Municipal Office, the 8th September 1902.

(628—1)

INSOLVENT NOTICES.

In the Court for the Relief of Insolvent Debtors at Calcutta.

In the matter of MUTTYLALL GHOSE, an insolvent.

Notice that an application for an *ad interim* protection order has been made by the said insolvent on the 3rd instant, and that such application will be heard and disposed of by the Acting Commissioner of the Insolvent Court on Monday, the 16th day of September instant, at the hour of half-past 10 o'clock in the forenoon.

☞ "Any creditor of the said insolvent desirous of opposing such application must appear before the said Court at the time and place aforesaid."

Charu Chunder Bose, Attorney.

Chief Clerk's Office, the 9th day of September 1902.

(629—1)

In the Court of the District Judge of Hooghly.

In the matter of Kalachand Pramanik, an insolvent.

KALACHAND PRAMANIK, of Shalap, thana Domjur, district Hooghly, was, on the 27th June 1902, declared an insolvent and discharged under section 351, Civil Procedure Code.

G. K. DEB, District Judge.

Hooghly District Judge's Court, the 4th September 1902. (616—1088—1)

In the Court of the District Judge of Bhagalpur.

INSOLVENCY CASE No. 4 OF 1902.

Dip Lal Bania and Noonoo Chand Bania, of Koshopur, pargana Sikahrapali, district Bhagalpur, petitioners.

NOTICE

IS hereby given that the abovenamed Dip Lal Bania and Noonoo Chand Bania were, on the 18th day of August 1902, declared insolvents by this Court. The Nazir of this Court has been appointed Receiver in the case.

D. H. KINGSFORD, Offg. District Judge.

Bhagalpur District Judge's Office, the 3rd September 1902. (617—1087—1)

In the 1st Court of the Subordinate Judge of Mymensingh.

In the matter of Afan Khan, an insolvent.

AFAN KHAN, son of Sarfat Khan, deceased, of Malipara, pargana Kagmari, district Mymensingh was, on 26th April 1902, declared an insolvent by this Court under section 351, Civil Procedure Code.

HARI PRASAD DAS, Subordinate Judge.

Mymensingh Subordinate Judge's 1st Court, the 4th September 1902. (620—1089—1)

Insolvency Notice.

NOTICE is hereby given that the undermentioned dividends are lying unclaimed:—

Estate Nogendra Nath Sen, an insolvent.

Nos.	Names of Creditors.	Amount of claim.	1st dividend at Rs. 3-10 per cent.
		Rs. A. P.	Rs. A. P.
36	Upendra Narain Sen	2,803 12 6	104 14 5
37	Kumar Seth Dwarka Dass, Administrator, and Kumar Seth Damooder Dass, an infant son, and heirs and legal representatives of Raja Seth Luchman Dass, deceased.	5,109 0 0	184 14 0

Estate Girindro Nath Dass, an insolvent.

			1st dividend at Rs. 3 per cent.
		Rs. A. P.	Rs. A. P.
29	Sreemutty Amadini Dassee ...	1,725 12 6	51 12 4

Estate Bucktwar Chand and another, insolvents.

			3rd dividend at Rs. 2 per cent.
		Rs. A. P.	Rs. A. P.
22	Hurry Dass Dutt	2,722 6 0	54 7 2
24	Harkissen Dass Serowgee	3,330 0 0	66 9 7
25	Bangshi Lall Abir Chand, Roy Bahadur.	10,000 0 0	200 0 0
41	Gopeekissen Bhatar ...	14,170 5 3	283 6 6
44	Sawdass Bagree ...	4,270 13 6	85 6 8
49	Provoolal Sukunchand ...	5,673 15 6	113 7 8
62	Meghraj Sreegopal Bagree	5,260 9 0	105 3 5
65	Ram Narain Gobindlall	3,875 12 6	77 8 3
71	Sett Gobind Dass Luchman Dass	8,779 8 9	175 9 5

A. B. MILLER, Official Assignee.

Calcutta, the 5th September 1902. (622—1)

NADIA RIVERS.

Report showing the least depths of water for the week ending Friday, the 5th September 1902.

Name of river.	Reach of river.	Least depth of water sounded.	REMARKS.
		Ft. in	
Bhagirathi.	Entrance from Ganges ..	15 0	
	Thence to Grish	12 0	Momintolah.
	From Grish to Jangipur ...	5 0	Nobakantopur.
	,, Jangipur to Berhampore	11 0	Sashpur.
	,, Berhampore to Katwa	12 0	Mirzapur.
	,, Katwa to Nadia ..	11 0	Keshiadanga.
Byrab-Jalangi.	Entrance from Ganges ...	17 0	
	Thence to Akriganj	22 0	Chakharpara.
	Akriganj to junction of the Bhyrab and Jalangi	16 6	Harharia.
	Thence to Patkabari	19 3	Lalnagore.
	Patkabari to Nadia ...	16 6	Taranagore.
Matha-bhanga.	Entrance from Ganges ...	11 9	
	Thence to Dewanganj . .	12 3	Jamalpur.
	From Dewanganj to Shikarpur	11 6	Meghna.
	,, Shikarpur to Boalia ...	13 0	Mahommadpur.
	,, Boalia to Chuadanga ..	24 0	Shyampur.
	,, Chuadanga to Kissenganj and Hauskhali..	14 3	Ganjapat.

Gauge Readings.

	Locality.	Date.	Hour.	Height above zero.	Height above mean sea level.	REMARKS.
Ganges ...	Sahebganj ...	6-9-1902	A.M. 6	Ft. 17·16	Ft. 85·16	Rise.
	Rampur Boalia...	6-9-1902	Noon	17·29	59·29	Do.
	Entrance of Bhagirathi Geriah ..	7-9-1902	A.M. 7	...	67·30	Do.
	Entrance of Ichyrub Jalangi Akhriganj ...	7-9-1902	A.M. 7	...	57·50	Do.
Bhagirathi.	Entrance of Mathabhanga ...	5-9-1902	...	17 00	...	Do.
	Jangipur ...	6-9-1902	...	...	64·10	Do.
	Berhampore ...	8-9-1902	A.M. 10	20 00	53·75	Do.
	Katwa ..	4-9-1902	P.M. 6	22 05	57·21	Do.
Jalangi	Krishnagar ...	5-9-1902	...	18·50	...	Do.
Mathabhanga.	Sarupganj ...	6-9-1902	Noon	...	21·30	Do
	Hanskhali ...	4-9-1902	...	15·10	...	Do.

A. K. BANERJEE, *Accts.*,

For *Exe. Engr.*, *Nadia Rivers Division.*

Berhampore, the 8th September 1902.

CALCUTTA POST OFFICE NOTICE.

Mails for—	Date and hour of closing at the General Post Office, Calcutta.		Route by which despatched.
	1902.	P.M.	
United Kingdom, Aden, Egypt, Europe, America, West Africa *vid* United Kingdom and East Africa *vid* Aden (and also South Africa, if superscribed on the cover *vid* United Kingdom or Aden).	11th Sept.	At 6-30	Per P. & O. steamer from Bombay.
Parcels and money-orders for the United Kingdom and other Foreign places.	10th ,,	Parcels P.M. At 5 M.-O. P.M. At 4	Ditto ditto.
* Australasian Colonies ...	15th ,,	,, 7-30	*Vid* Tuticorin and Colombo.*
† Straits Settlements (also China and Japan, if the steamer's name is superscribed on the cover).	10th ,,	,, 8-30	Per steamer *Nam-Sang.*
Burma	11th ,,	,, 7-30	Per B. I. S. N. Co.'s steamer.
Burma, Penang and Singapore.	13th ,,	,, 7-30	Ditto ditto.
Akyab, Kyaukpyu and Sandoway.	13th ,,	,, 7-30	Ditto ditto.
Burma, Tavoy and Mergui ...	15th ,,	,, 7-30	Ditto ditto.
Port Blair	12th ,,	,, 7-30	Per steamer *Shahjehan.*
Mauritius, Réunion, Mayotte and Nossi-Be.	17th ,,	,, 7-30	Per Steamer *Fazilka* from Colombo.
Port Blair	15th ,,	,, 7-30	*Vid* Rangoon.
South Africa (Letters) ..	10th ,,	,, 7-30	Per steamer *Malvern* from Colombo.
Ditto (Parcels for Natal and Cape Colony only).	10th ,,	,, 5	

* Although the date entered in column 2 is, as far as can be calculated, the latest safe date of posting for the next Mail steamer, full allowance being made for the steamer being in advance of her published timing, Mails for the places mentioned in column 1 are despatched daily to Colombo, so that they may proceed by any steamer that has been unusually accelerated or retarded, or by any special opportunity that may be afforded by a steamer not belonging to one of the regular lines.

† Correspondence for China and Japan is despatched daily to Colombo, so that they may proceed by the first steamer available.

1. The letter-box for Inland articles will be cleared for the forenoon Mails at the following hours:—

For Goalundo, Arakan and Chittagong, at 5-30 A.M.

For Midnapore and Orissa districts, at 8-30 A.M.

For the Eastern districts, as far as Dacca and Mymensingh, at 6-30 A.M.

For Khulna and Jessore districts, at 7-30 A.M.

For Bombay, Central Provinces and Midnapore, *vid* Bengal-Nagpur Railway, at 10-45 A.M., and with a late fee of ½ anna up to 11-35 A.M.

2. The letter-box will be cleared for the evening Mails at the following hours, viz.—

For the East Indian Railway Loop Mail, at 2-30 P.M., and with a late fee of ½ anna up to 2-55 P.M.

For the Northern Bengal, Darjeeling and Assam Mails, at 3-25 P.M., and with a late fee of ½ anna up to 3-50 P.M.

For the Bombay Mail, *vid* Jubbulpore, at 6 P.M., and with a late fee of ½ anna up to 6-30 P.M.

For the Punjab Mail, at 7-30 P.M.
For Midnapore, Orissa and Madras Presidency, at 7-30 P.M.
For the Khulna Mail, at 7-30 P.M.
For the Eastern Bengal Mail, at 7-30 P.M.
} and with a late fee of ½ anna up to 8 P.M. and with a late fee of 1 anna up to 8-45 P.M.

3. Late registered letters will be received between the following hours:—

For the Bombay Mail, *vid* Jubbulpore, from 5 P.M. to 6-15 P.M.

For the Punjab Mail, from 6 P.M. to 7 P.M.

For the Eastern Bengal Mail, from 6 P.M. to 7 P.M.

For the Khulna Mail, from 6 P.M. to 7 P.M.

For Midnapore, Orissa and the Madras Presidency, from 6 P.M. to 7 P.M.

NOTE.—The late fee on each registered letter will be 2 annas which must be prepaid in stamps on the letter.

4. Articles for Burma and for Port Blair by sea are received without late fee up to 7-30 P.M., and with a late fee of ½ anna up to 8 P.M.

5. On the latest safe day of despatch of Mails for the Australasian Colonies or any other Foreign Countries, *vid* Madras or Tuticorin, the letter-box for Foreign articles will be cleared for the last time at 7-30 P.M., and late letters and papers fully prepaid will be received up to 8-45 P.M.

6. On the day of despatch of the Mail for Europe (Thursday), the letter-box for Foreign articles will be cleared for the last time, for articles, without the late fee, at 6-30 P.M., and late letters and papers fully prepaid will be received up to 6-45 P.M. Late registered articles will be received from 5 to 6 P.M. On other days the letter-box for Foreign articles will be cleared for the last time, without the late fee, at 6 P.M., and late letters and papers will be received up to 6-30 P.M. for despatch by any Foreign Mails, *vid* Bombay, the same night and up to 8-30 P.M., late letters and papers up to 9 P.M., for any Foreign Mails despatched by sea. Foreign Mails for despatch *vid* Madras or Tuticorin are received up to 7-30 P.M., and with a late fee up to 8-45 P.M. The late fee for Foreign articles is 4 annas, which must be prepaid in stamps affixed to the articles.

JOHN OWENS,

Presidency Postmaster.

CALCUTTA G. P. O.,

The 9th September 1902.

Parts I, II, and III of a Descriptive Catalogue of the Sanskrit Manuscripts in the Library of the Calcutta Sanskrit College, prepared by Pandit Hrishikesa Sastri and Babu Siva Chandra Gui, M.A., B.L., of that College are offered to the public for sale. The Catalogue is to be completed in 23 parts, the price of each part being 12 annas a copy, exclusive of postage. Copies can be obtained, from the Principal of the Sanskrit College, Calcutta.

GOVERNMENT PUBLICATIONS FOR SALE

BY THE SUPERINTENDENT OF GOVERNMENT PRINTING, INDIA, 8 HASTINGS STREET, CALCUTTA.

[A General Catalogue of all Government Publications may be obtained gratis from the Government Central Press, Calcutta.]

All books published by the Superintendent of Government Printing, India, can be purchased, either directly or through the following or any other booksellers:—

AGENTS IN INDIA.

Messrs. Thacker, Spink & Co., Calcutta and Simla.
Messrs Newman & Co., Calcutta.
Messrs. Higginbotham & Co., Madras.
Messrs. Thacker & Co., Ld., Bombay.
Messrs. A. J. Combridge & Co., Bombay.
Messrs. V. Kalyanarama Iyer & Co., Madras.
Messrs. D. B. Taraporevala, Sons & Co., Bombay
Superintendent, American Baptist Mission Press, Rangoon.
Rai Sahib M. Gulab Singh and Sons, Mufid-I-Am Press, Lahore.
Manager, Educational Book Depôts, Nagpur and Jubbulpore.*
Manager of the Imperial Book Depôt, 63 Chandni Chauk Street, Delhi.*
Manager, "East Coast News," Vizagapatam.*
Manager, "The Agra Medical Hall and Co-operative Association, Limited" (Successors to A. John & Co.), Agra.*
Mr. T. K. Sectharama Aiyar, Kumbakonam.*
Lala Debi Prasad, Vakil and Manager of Law Press, Cawnpore.*

AGENTS IN EUROPE.

Mr. E. A. Arnold, 37 Bedford Street, Strand, London.
Messrs. Constable & Co., 2 Whitehall Gardens, London.
Messrs. Sampson Low, Marston & Co., St. Dunstan's House, Fetter Lane, London.
Messrs. Luzac & Co., 46 Great Russel Street, London.
Messrs. Kegan Paul, Trench, Trübner & Co., Charing Cross Road, London.
Mr B Alfred Quaritch, 15 Piccadilly, London.
Messrs P. S. King and Son, 2 & 4 Great Smith Street, Westminster.
Messrs. H. S King & Co., 65 Cornhill, London, are also Agents for the sale of the Indian Army List.
Mr. Otto Harrassowitz, Mr. Karl Hiersemann } Leipzig.
Messrs. R. Friedlander & Sohn, Berlin, N. W. Carlstrasse, 11.
Mr. Ernest Leroux, 28 Rue Bonaparte, Paris.
Mr. Martinus Nijhoff, the Hague, Holland.
Messrs. Williams and Norgate, Oxford.
Messrs. Deighton Bell & Co., Cambridge.

* Agents for sale of the Legislative Department publications.

NOTICE.—Books and Acts required for private use only can be purchased. Applications should be accompanied by a remittance, unless it is wished that the books should be sent by value-payable post, in which case, besides the ordinary postage, an additional charge is made for registration and commission.

Books and Acts required for the public service should be obtained through Local Governments to whom the applicant is subordinate.

Applications for Government publications which are no longer in print should be made to the Agents of the particular Government under whose orders they were originally issued.

The amounts within parentheses are for packing and postage.

List of New Books published during the Current Quarter.

LEGISLATIVE DEPARTMENT.

List of General rules and orders under Statutes and General Acts in force in British India Corrected to 31st March 1902. Royal 8vo. Stitched. Re. 1 8*a*. or 2*s*. 3*d*. (3*a*.)
Madras Code. Third Edition, in two Volumes. 1901. Super-Royal 8vo. Cloth. Rs. 6 or 9*s*. (8*a*.) each.
The Indian Lunatic Asylums Act, 1858 (Act XXXVI of 1958), as modified up to 31st May, 1902. 5*a* 6*p*. or 6*d*. (1*a*.)
The Agriculturists Loans Act, 1884 (Act XII of 1884), as modified up to 15th December, 1896, and with foot-notes brought down to the 1st June, 1902. 2*a*. or 3*d*. (1*a*.)
The Northern Indian Ferries Act, 1878 (Act XVII of 1878), as modified up to 1st June, 1902. 6*a*. or 7*d*. (1*a*.)
The Indian Tariff Act, 1894 (Act VIII of 1894), as modified up to 30th June, 1902. 8*a* or 9*d*. (1*a*.)

HOME DEPARTMENT.

Report on the Nature of Kala-Azar, by Major Ronald Ross, I.M.S. F'cap. Board Rs. 2 or 3*s* (3*a*.)
Report of the Indian Universities Commission will shortly be available on sale at the Government Central Press, Calcutta.
Scientific Memoirs by Officers of the Medical and Sanitary Departments of the Government of India. Standardisation of Calmette's Anti-Venomous Serum with Pure Cobra Venom. The Deterioration of this Serum through keeping in India by Captain G. Lamb, M.B, I.M.S, and Wm. Hanna, Esq., M.B, etc. New series, No. I. Super Royal 4to. Paper cover. 3*a*. or 4*d*. (1*a*.)

FINANCE AND COMMERCE DEPARTMENT.

List of Officers in the Finance and Commerce Department. Corrected to 1st May 1902. Royal 8vo. Paper cover. 4*a*. or 5*d*. (1*a*.)
Statistics compiled from the Finance and Revenue Accounts of the Government of India. Receipts and Disbursements of Home and Indian Accounts from 1st April 1892 to 31st March 1900. F'cap. Board. Rs. 2 or 3*s*. (7*a*.)

STATISTICAL DEPARTMENT.

Review of the Trade of India in 1901-1902. F'cap. Paper cover. 8*a*. or 9*d*. (2*a*.)
Statistics of Cotton Spinning and Weaving in the Indian Mills in April 1902, and in the corresponding month of 1900 and 1901. Royal 8vo. Stitched. 2*a*. or 2*d*. (1*a*.)
Accounts of the External Land Trade of British India for the month of April 1902. Royal 8vo. Stitched. 8*a*. or 9*d*. (2*a*.)

Trade and Navigation Accounts of British India for the month of June 1902. No. 3. Royal 8vo. Stitched. 8a. or 9d. (2a.)

Area and yield of certain crops from 1891-1892 to 1901-1902. F'cap. Paper cover. 5a. or 6d. (8a.)

Accounts relating to the Trade carried by Rail and River in India in the quarter and in the twelve months ending March 1902, compared with the corresponding periods of the years 1900 and 1901. No. 4 of 1901-1902. F'cap. Paper cover. 8a. or 9d. (a.)

Agricultural Statistics of India for the years 1896-1897 to 1900-1901, 17th issue, in two parts. F'cap. Board. Both parts Rs. 3-8a. or 5s. 3d. (12a.)

COMPTROLLER-GENERAL.

Civil Estimates, 1902-1903. F'cap. Board. Vols. I and II. Rs. 3 or 4s. 6d. (13a.) each volume.

FOREIGN DEPARTMENT.

Report on Sanitation, Dispensaries, and Jails in Rajputana for 1900 and on Vaccination for the year 1900-1901. F'cap. Board. Re. 1 or 1s. 6d. (4a.)

MILITARY DEPARTMENT.

List of Light houses and Light-vessels in British India, including those in the Gulf of Aden as existing at the end of 1901. 21st Issue. Royal 8vo. Board. Re. 1 or 1s. 6d. (2a.)

The Quarterly Indian Army List for July 1902. Royal 8vo. Paper cover. Rs 3 or 4s. 6d. (2a.)

Military Works Services Classified List and istribution Return. Corrected up to 30th June 1902. Royal 8vo. Paper cover. 4a. or 5d. (1a.)

General List of Vouchers required to support Credits and Charges in Supply and Transport Cash and Store Accounts. India. Royal 8vo. Paper cover. 10a. or 1s. (3a.)

PUBLIC WORKS DEPARTMENT.

Administration Report on the Railways in India for the calendar year 1901. F'cap. Paper cover. Rs 2 or 2s. 8d. (8a.)

Public Works Department Classified List and Distribution Return of Establishment. Corrected to 30th June 1902. Super Royal 8vo. Paper cover. Re. 2 or 3s. (4a.)

Classified List of the Subordinate Establishment. Corrected to 30th June 1902. Super Royal 8vo. Paper cover. 4a. or 5d (1a.)

REVENUE AND AGRICULTURE DEPARTMENT.

Technical Art Series for 1901. Together with their explanatory text and cover. Nos. I to XII. 4a. or 5d. (3a.) per plate.

List of Books published from January to June 1902.

LEGISLATIVE DEPARTMENT.

Chronological Tables of the Indian Statutes compiled, under the orders of the Government of India, by F. G. Wigley, Esq. Royal 8vo. Cloth. *Rs.* 4 or 6s. (7a.)

The Indian Penal Code (Act XLV of 1860), as modified up to the 1st July 1899, and with foot-notes brought down to 1st April 1901. *Rs.* 2-8 or 3s. 9d. (6a.)

The Indian Factories Act, 1881, as modified up to the 1st April 1891 (with foot-notes brought down to 1st July 1901). 5a. 6p. or 6d. (1a. 6p.)

Effect of Legislation for 1898, 1899, and 1900. *Re.* 1 or 1s. 6d. (2a.)

Chronological Tables of the Indian Statutes, 1901. *Re.* 1 or 1s. 6d. (2a.)

A Digest of Indian Law Cases, Vol. III. Cloth bound. *Rs.* 12 or 18s. (10a.)

Ditto ditto ditto. Quarter bound. *Rs.* 13 or 19s. 6d. (10a.)

Act IX of 1901. An Act further to amend the Indian Articles of War. 1a. or 1d. (1a.)

Act X of 1901. An Act further to amend the Court-fees Act, 1870. 1a. 3p or 1d. (1a.)

Act XI of 1901. An Act to facilitate the citation of certain Enactments and to amend and repeal certain obsolete Enactments.

Regulation III of 1901. A Regulation further to provide for the suppression of crime in certain frontier districts. 7a. 6p. or 9d. (1a. 6p.)

Regulation IV of 1901. A Regulation to make better provision for the suppression of murderous outrages in certain frontier tracts. 2a. 6p. (1a.)

Regulation V of 1901. A Regulation further to amend the Upper Burma Land and Revenue Regulation, 1899. 1a. 9p. or 2d. (1a.)

Regulation VI of 1901. A Regulation to repeal so much as is unrepealed of the Punjab Frontier Regulation, 1872, and of the Hazara Settlement Rules, 1a. or 1d (1a.)

Regulation VII of 1901. A Regulation to alter certain of the laws in force in the North-West Frontier Province, to declare that certain Enactments are in force therein, and to bar the application of certain others hereto. 11a. or 1s. 3d. (2a.)

Corrigendum slip for Act XIII of 1900. 1a.

Title-page and Contents to Acts of 1901. 1a. 6p. (1a.)

Index to Acts of 1901. 2a. 9p. or 3d (1a.)

The European Vagrancy Act, 1874 (IX of 1874), as modified up to 1st December, 1901. 6a. 6p. or 7d. (1a.)

The Chaukidars Act, 1856 (XX of 1856), as modified up to 1st December, 1901. 7a. 6p. or 8d. (1a.)

The Registration of Ships Act, 1841 and 1850 (X of 1841 and XI of 1850), as modified up to 1st December 1893, and with foot-notes brought down to 1st December, 1901. 7a. or 7d. (1a.)

Table showing the effect of Legislation in the Governor-General's Council during 1901. 6s. or 6d. (1a.)

LIST OF TRANSLATIONS AND TRANSLITERATIONS OF ACTS PUBLISHED FROM 1ST OCTOBER 1901 TO 31ST MARCH 1902.

The Cattle-trespass Act, 1871 (I of 1871), as modified up to the 1st April 1901. In Urdu. 2a. (1a.)

Ditto. In Hindi. 2a. (1a.)

Act IX of 1901 (an Act further to amend the Indian Articles of War). In Urdu. 3p. (1a.)

Ditto. In Hindi. 3p. 1a.

Act X of 1901 (an Act further to amend the Court-fees Act, 1870). In Urdu. 3p. (1a.)

Ditto. In Hindi. 3p. (1a.)

HOME DEPARTMENT.

Chronological Tables for 1902, embodying Notifications by the Government of Bengal and Government of India prescribing holidays during the year with corresponding dates in English, Bengali, Velati, Fusli, etc. Royal 8vo. Paper cover. 4a. or 4d. (1a.)

Annual Report of the Sanitary Commissioner with the Government of India, 1900, with Appendices and Returns of Sickness and Mortality among European Troops, Native Troops, and Prisoners in India, for the year. F'cap. Boards. *Rs.* 3 or 4s. 6d. (8a.)

Report of Proceedings of the Central Indigenous Drugs Committee of India, Volume I. Royal 8vo. Board. Rs. 3-8 or 5s. 3d. (7a.)

List of Europeans and others in the English Factories in Bengal at the time of the Siege of Calcutta in the year 1756, with an appendix containing lists of European Sufferers. By S. Charles Hill, Esq., B.A., B SC. Super-Royal 4to. Paper cover. Rs 2 or 3s. (3a.)

Judicial and Administrative Statistics for British India. 6th issue, 1900-1901, and preceding years. F'cap. Board. Rs. 2 or 3s. (10a.)

The Countess of Dufferin's Fund Seventeenth Annual Report of the National Association for Supplying Female Medical Aid to the Women of India for the year 1901. Super-Royal 8vo. Re. 1 or 1s. 4d. (3a.)

DEPARTMENT OF REVENUE AND AGRICULTURE.

List of Officers in the Survey and other Scientific and Minor Departments subordinate to the Government of India in the Department of Revenue and Agriculture, corrected to 1st July 1901. Royal 8vo. Paper cover. 8*a.* or 9*d.* (2*a.*)

Report of the Committee on the Establishment of Co-operative Credit Societies in India. F'cap. Paper cover. 4*a.* or 5*d.* (2*a.*)

Forest Flora of the School Circle, North-Western Provinces, being a descriptive list of the indigenous woody plants of the Shaharanpur and Dehra Dun districts and the adjoining portions of the Tehri-Garhwal State in the North-Western Provinces, with Analyses. Double-Crown. 16mo. Full cloth. Re. 1-8 or 2*s.* (3*a.*)

Archæological Exploration in Chinese Turkestan. By Dr. M. A. Stein. Royal 4to. Cloth. Rs. 4 or 6*s* (4*a.*)

Land Revenue Policy of the Indian Government. Royal 8vo. Cloth. 10*a.* or 1*s.* (4*a.*)

FOREIGN DEPARTMENT.

Report on the Administration of the Baluchistan Agency for 1900-1901. Re. 1-8 or 2*s.* 3*d.* (3*a.*)

Report on the Administration of the Hyderabad Assigned Districts for the year 1900-1901. F'cap. Limp cover. Rs. 3-12 or 5*s.* 6*d.* (6*a.*)

Report on the Political Administration of the territories within the Central India Agency for 1900-1901. F'cap. Limp cover. *Re.* 1-8 or 2*s.* (3*a.*)

Annotated Returns of the Dispensaries in Central India for 1900. F'cap. Limp cover. *Re.* 1-8 or 2*s.* (3*a.*)

Report on the Administration of the Civil and Military Station of Bangalore for the year 1900-1901. F'cap. Board. 8*a.* or 9*d.* (2*a.*)

Grammar and Vocabulary of Waziri Pashto. By J. G. Lorimer, Esq., I.C.S. Royal 8vo. Board. Rs. 3 or 4*s.* 6*d.* (5*a.*)

FINANCE AND COMMERCE DEPARTMENT.

List of Officers in the Finance and Commerce Department. Corrected to December 1901; to April 1902. 4*a.* or 5*d.* (1*a.*) each.

Papers relating to the proposed Establishment of a Central Bank in India. F'cap. Board. Re. 1 or 1*s.* 6*d.* (4*a.*)

Administration Report of the Mint at Bombay and Calcutta for 1900-1901. F'cap. Paper cover. Re. 1 or 1*s.* 6*d.* (2*a.*)

Schedule IV of the Indian Tariff Act (VIII of 1878) of 1902. Royal 8vo. Stitched. 6*a.* or 6*d.* (1*a.*)

STATISTICAL DEPARTMENT.

Trade and Navigation Accounts of British India for the months of December 1901 to May 1902. Royal 8vo. Stitched. 8*a.* or 9*d.* (2*a.*) each.

Accounts of the External Land Trade of British India for the months of September 1901 to March 1902. Royal 8vo. Stitched. 8*a.* or 9*d.* (2*a.*) each.

Accounts relating to the Trade carried by Rail and River in India in the quarter ending September 1901. Compared with the corresponding periods of the years 1899 and 1900. No. 2 of 1901-1902. F'cap. Paper cover. 8*a.* or 9*d.* (2*a.*)

Accounts relating to the Trade carried by Rail and River in India in the quarter ending December 1901. Compared with the corresponding periods of the years 1899 and 1900. No 3 of 1901-1902. F'cap. Paper cover. 8*a.* or 9*d.* (2*a.*)

Accounts of the Trade of the French Possessions in India in the year ending 31st March 1901, and the four preceding years F'cap. Paper cover. 2*a* or 3*d.* (1*a.*)

Statistics of Cotton Spinning and Weaving in the Indian Mills in January, February, and March 1902; in the ten months, April 1901 to January 1902; in the eleven months, April 1901 to February 1902, and in the twelve months, April 1901 to March 1902. Compared with the corresponding period of 1899-1900 and 1900-1901. Royal 8vo. Stitched. 2*a.* or 2*d.* (1*a.*) each.

Accounts of the Trade of Aden in the year ending 31st March 1901, and the four preceding years. F'cap. Paper cover. 10*a.* or 1*s.* (2*a.*)

Accounts of the Trade of the Portuguese Possessions in India in the year 1899-1900 and the four preceding years. F'cap. Paper cover. 2*a.* 3*d.* (1*a*)

Prices and Wages in India. Nineteenth issue, 1902. Super-Royal 4to. Board. Re. 1-8 or 2*s* (9*a.*)

COMPTROLLER-GENERAL.

Finance and Revenue Accounts of the Government of India for 1900-1901. F'cap. Board. Rs. 2 or 3*s.* (8*a.*)

Appropriation Report on the Accounts of the Government of India for 1900-1901. By A. F. Cox, Esq. F'cap. Board. 8*a.* (5*a*).

MILITARY DEPARTMENT.

The Monthly Indian Army List for February to March, May, June 1902. Royal 8vo. Paper cover. Re 1-8 or 2*s.* 3*d.* (4*a.*) each.

Return of Wrecks and Casualties in Indian Waters for the year 1900. F'cap. Stiff cover. 12*a.* or 1*s.* (3*a*)

Military Works Services Classified List and Distribution Return. Corrected up to 31st December 1901. Royal 8vo. Paper cover. 4*a.* or 5*d.* (1*a.*)

Indian Military Budget Estimate for the year 1902-1903. F'cap. Board. Re. 1-8 or 2*s.* 3*d.* (8*a.*)

PUBLIC WORKS DEPARTMENT.

Public Works Department Classified List and Distribution Return of Establishment. Corrected up to 31st December 1901. Super-Royal 8vo. Paper cover. Rs. 2 or 3*s.* (4*a.*)

Classified List (Public Works Department), Subordinate Establishment. Corrected up to 31st December 1901. Super-Royal 8vo. Paper cover. 4*a.* or 4*d.* (1*a.*)

Budget Estimate of the Indo-European Telegraph Department for the year 1902-1903. F'cap. Paper cover. 8*a.* or 9*d.* (1*a.* 6*p.*)

Budget Estimate of the Indian Telegraph Department for the year 1902-1903. F'cap. Paper cover. 8*a.* or 9*d.* (1*a.* 6*p.*)

History of Services of the Officers of the Engineer, Accounts, and State Railway Revenue Establishments. Corrected to 31st December 1901. In two Volumes. Royal 8vo. Board. Vol. I, Rs. 2-8 or 3*s.* 9*d.* (6*a.*). Vol. II Rs. 2-8 or 3*s.* 9*d.* (6*a.*) Complete, Rs. 5 or 7*s.* 6*d.* (9*a.*)

List of new books for sale at the Thomason College, Roorkee, which were not advertised before.

Roorkee Treatise on "Railways," 4th Edition, revised by F. Wolley Dod, M.C.E. Price, Rs. 3 per copy.

Roorkee Treatise on "Irrigation Works." By Lieutenant-Colonel J. Clibborn, I.S.C., B.A., L.C.E., C.I.E. Price Rs. 9 per copy.

Roorkee Treatise on "Sanitary Engineering." Compiled by Lieutenant-Colonel J. Clibborn, I.S.C., B.A., L.C.E., C.I.E. Price, Rs. 4-8 per copy.

Roorkee Manual of "Applied Mechanics," Volume II. The stability of structures mostly by graphic methods, by Lieutenant-Colonel J. H. C. Harrison, R.E. Price, Rs. 8-2 per copy.

Roorkee Manual of Hydraulics. Price per copy, Re. 1-4. (No. XIX, Elementary Treatise). By E. F. Tipple, Esq., B.A.

Designs for Wooden Bridges, together with rules for calculating the area of waterway, &c., and Plates. By late Rai Bahadur Kunhya Lal. Price per set, Rs. 4-2

Pamphlet on Examination for Acid Radicals: Tables giving Analysis of Acids. Price per copy, 8a.

Pamphlet on Examination for Acid Bases: Tables giving Analysis of Metallic Bases. Price, 8a. per copy.

Pamphlet on Note on Masonry Arches (College publication). Price, 4a. per copy.
Pamphlet on Small Direct Well Pumping Installations. Price, 4a. per copy.
Pamphlet on Experiments made on the passage of water through the sand of the Chenab River at the Khanki Weir. By Lieutenant-Colonel J. Clibborn, I.S.C., C.A., L.C.E., C.I.E. Price per copy, 12a.
Indian Household Account Book for a period of two years, comprising Daily Table Expense Account, Bread, Butter and Milk Account, Dhobey's Account, Servants' Wages Account. etc. Price, Rs. 3 per copy.

Cash must accompany order. Articles are sent by V.-P. P. to persons in Government employment only.

Application is to be made to the Curator, Thomason College Book Depôt, Roorkee.

Half-yearly list of new books and periodicals for sale at the Library of the Asiatic Society of Bengal, 57 Park Street, Calcutta.

ASIATIC SOCIETY'S PUBLICATIONS.

Proceedings Nos. 9 to 11 of 1901 and No. 1 of 1902, at 8a.
Journal, Part I, No. 2 of 1901, at Rs. 2.
" Part II, No. 2 of 1901, at Rs. 2.
" Part III, No. 2 of 1901, and Part III, No. 1 of 1902, at Rs. 2.

BIBLIOTHECA INDICA.

Upamitibhavaprapancha Katha. Fasc. 4 at 6a.
Catapatha Brahmana. Vol. I, Fasc. 5, at 6a.
Varsakriya Kaumudi. Fasc. 3 and 4, at 6a.
Nityacarapaddhati. Fasc. 2 and 3, at 6a.
Apastamba Sranta Sutra. Vol. III, Fasc. 16, at 6a.
Mahabhasyaprodipodyata. Vol. II, Fasc. 2 and 3, at 6a.
Al-Muquddasai. (English.) Vol. I, Fasc. 2, at 12a.

List of Books published by the Meteorological Department during the current quarter.

Monthly Weather Review of India for the month of February 1902. By John Eliot and Lala Hem Raj (illustrated by 5 plates). Quarto. Paper cover. Re. 1.
Indian Meteorological Memoirs, Volume XII, Part III. By John Eliot (illustrated by 68 plates) Quarto. Paper cover. Rs. 3.
Indian Meteorological Memoirs, Volume XII, Part IV. By W. L. Dallas, Quarto. Paper cover. Rs. 3
Monthly Weather Review of India for March 1902. By John Murray and Hem Raj. (Illustrated by 5 plates.) Quarto. Paper cover. Re. 1.

List of books published by Meteorological Department from 1st January to 30th June, 1902.

Monthly Weather Review of India, from September, 1901, to January, 1902. By W. L. Dallas (illustrated by five plates). Quarto. Paper cover. Re. 1 per month.
Report of the Director, Government Observatory, Bombay, for the year ending 31st December, 1901. By N. A. F. Moos. Quarto. Paper cover.
Report on the Kodaikanal and Madras Observatories for the period 1st April to 31st December, 1901. By C. Michie Smith. Quarto. Paper cover.
Indian Meteorological Memoirs, Volume XII, Part II. By John Eliot. Quarto. Paper cover. Rs. 3.
Indian Meteorological Memoirs, Volume XIII. By John Eliot. Quarto. Paper cover Rs 5.

List of new books published by the Geological Survey of India during the week ending 30th August, 1902.

The Mica Deposits of India. Thomas H. Holland, A.R.C.S., F.G.S., Officiating Superintendent, Geological Survey of India. Rs. 3.

GOVERNMENT PUBLICATIONS FOR SALE

At the Bengal Secretariat Book Depôt, Writers' Buildings, Calcutta, and by the following Agents :—

AGENTS IN INDIA.

Messrs Thacker, Spink & Co., Calcutta and Simla.
Messrs. Newman & Co., Calcutta
Messrs Higginbotham & Co, Madras
Messrs. Thacker & Co., Ld., Bombay
Messrs. A. J. Combridge & Co., Bombay.
Mr. E Seymour Hale, 53 Esplanade Road, Fort, Bombay, and Calcutta
The Superintendent, American Baptist Mission Press, Rangoon.
Messrs. S K. Lahiri & Co., Printers and Booksellers, College Street, Calcutta.
Rai Sahib M. Gulab Singh & Sons, Proprietors of the Mufid-i-am Press, Lahore, Punjab
Messrs. V. Kalyanarama Iyer & Co., Booksellers, &c., Madras.
Messrs. D B Taraporevala Sons & Co., Booksellers, Bombay.

AGENTS IN ENGLAND.

Mr. E. A. Arnold, 37 Bedford Street, Strand, London.
Messrs. Constable & Co., 2 Whitehall Gardens, London.
Messrs Sampson Low, Marston & Co., St. Dunstan's House, Fetter Lane, London.
Messrs. Luzac & Co., 46 Great Russell Street, London.
Messrs. Kegan Paul, Trench, Trübner & Co, Charing Cross Road, London.
Mr B. Alfred Quaritch, 15 Piccadilly, London.
Messrs. P S. King & Son, 2 & 4 Great Smith Street, Westminister, London.
Messrs. H S King & Co., 65 Cornhill, London.
Messrs. Williams and Norgate, Oxford.
Messrs. Deighton Bell & Co., Cambridge.

AGENTS ON THE CONTINENT.

Messrs. R. Friedländer & Sohn, Berlin, N. W. Carlstrasse, 11.
Mr. Otto Harrassowitz, Leipzig.
Mr. Karl Hiersemann, Leipzig
Mr. Ernest Leroux, 28 Rue Bonaparte, Paris.
Mr. Martinus Nijhoff, The Hague

NOTICE.—Books required for private use can be purchased Applications should be accompanied by a remittance in each case.

All remittances on account of subscriptions to, or prices of, Gazettes, Indian Law Reports or other Government publications available for sale at the Bengal Secretariat Book Depôt, or for cost of advertisements published in the Gazettes should, in future, be made payable to the "Treasurer, Bengal Secretariat, Calcutta." Advices of such remittances, if separately sent, should be addressed to the "Accountant, Bengal Secretariat." All advertisements intended for publication in the *Calcutta* or *Bengali Gazette* should be sent direct to the Superintendent, Government Printing, Bengal.

Books required for the Public Service should be obtained through the Heads of Departments.

☞ *The amounts within parentheses are for packing and postage*

NEW PUBLICATIONS ISSUED DURING THE CURRENT QUARTER.

APPOINTMENT DEPARTMENT

Quarterly Civil List of Bengal, corrected up to 1st July 1902. Super-Royal 8vo. Paper cover. Re. 1 (4a.)

GENERAL DEPARTMENT.

Report of Emigration from the Port of Calcutta to British and Foreign Colonies, 1901 By the Protector of Emigrants, Calcutta F'cap. Paper cover. 12a. (1a.)
Civil Engineering College, Sibpur, Calendar for 1902. Royal 8vo. Paper cover. 12a (2a)
Annual Report on Inland Emigration for the year 1901 F'cap. Paper cover 8a. (1a.)
Annual Report on the Reformatory Schools at Alipore and Hazaribagh for the year 1901 F'cap. Paper cover. 4a (1a.)

JUDICIAL DEPARTMENT

Annual Report on the Police Administration of the Town of Calcutta and its Suburbs for the year 1901. F'cap. Paper cover Re. 1. (1a.)

LEGISLATIVE DEPARTMENT

The Bengal Vaccination Act, 1880 (Bengal Act V of 1880), as modified up to 1st June 1902. Royal 8vo. Paper cover. Price 4a. (1a.)
The Salt Act, 1864 (Bengal Act VII of 1864), as modified up to 1st July 1902, with an appendix showing the extent to which the Indian Salt Act, 1882, is in force in Bengal. Royal 8vo. Paper cover. 3a. (1a.)

MUNICIPAL DEPARTMENT

Triennial Report on the working of the Charitable Dispensaries under the Government of Bengal and the Calcutta Medical Institutions for the years 1899, 1900 and 1901. F'cap. Paper cover Re. 5. 3a.)
Thirty-fourth Annual Report of the Sanitary Commissioner for Bengal for the year 1901. F'cap. Board. Paper cover. Re. 1-12, (3a.)
Fifth Triennial Report of Vaccination in Bengal during the years 1899-1900, 1900 1901, and 1901-1902 F'cap. Paper cover. Re. 1. (1a.)

POLITICAL DEPARTMENT.

Administration Report on the Jails of Bengal for the year 1901. F'cap. Board. Paper cover. Re. 1. (3a.)

PUBLIC WORKS DEPARTMENT.

Electric Traction.—Six lectures delivered in March 1902 at the Civil Engineering College, Sibpur, by J. W. Meares, Esq., Electrical Engineer to the Government of Bengal. Royal, 8vo. Full cloth. Re. 1-8. (2*a.*)

Classified List and Distribution Return of Establishment of the Public Works Department, Bengal, corrected up to 30th June 1902. Super-Royal 8vo. Paper cover. 4*a.* (1*a.*)

A Manual for the guidance of the staff of the Revenue Division of the Sone Canals. By H. Toogood, Esq., Superintending Engineer, Sone Circle. Royal 8vo. Board. Paper cover. Re. 1. (2*a.*)

REVENUE DEPARTMENT.

Season and Crop Report of Bengal for the year 1901-1902. F'cap. Paper cover. 8*a.* (1*a.*)

The Sale Law Manual, a Manual of the Revenue and the Patni Sale Laws with Notes and the rules, &c., under them. Royal 8vo. Board. Paper cover. Re. 1-4. (3*a.*)

Price-list of staple food-crops in the local areas of Bengal, for the period from 1st January to 31st March 1901. F'cap. Board. Paper cover. Re. 1. (2*a.*)

Rules for the keeping and inspection of accounts of collections in Government and Wards' Estates. Published under the authority of the Board of Revenue, L. P. Royal 8vo. Board. Paper cover. As. 8. (1*a.*)

The Government Estates' Manual, 1902. Royal 8vo. Board. Paper cover. Re. 1. (3*a.*)

PUBLICATIONS ISSUED BETWEEN THE 1ST JANUARY AND THE 30TH JUNE 1902.

APPOINTMENT DEPARTMENT.

Quarterly Civil List of Bengal corrected up to 1st April 1902. Super-royal 8vo. Paper cover. Price Rs. 3. (4*a.*)

FINANCIAL DEPARTMENT.

The Stamp Manual, 1902. A Manual for the guidance of officers in the administration of the Stamp Department. Royal 8vo. Board. Paper cover. Price Re. 1-8. (6*a.*)

Annual Report on the consumption of Stationery in Bengal during 1900-1901. F'cap. Paper cover. Rs. 3. (2*a.*)

GENERAL DEPARTMENT.

List of Officers in the Subordinate Educational Service, Bengal, corrected up to 1st April 1902. F'cap. Paper cover. 8*a.* (1*a.*)

JUDICIAL DEPARTMENT.

Question Papers set at the Pleadership and Muktearship Examinations for the year 1902. Royal 8vo. Paper cover. Price 2*a.* (1*a.*)

Question Papers set at the Examination of candidates for appointment as Sub-Inspectors of Police. July and November 1901. Royal 8vo. Paper cover. Price 5*a.* (1*a.*)

Question Papers set at the Examination of candidates for recruiting the staff of Superior Police Officers in Bengal and Assam, held in November 1901. Royal 8vo. Paper cover. Price 8*a.* (1*a.*)

LEGISLATIVE DEPARTMENT.

The Court of Wards' Act, 1879 (Bengal Act IX of 1879), in Hindi, as modified up to the 1st July 1901. Royal 8vo. Paper cover. Price 6*a.* (1*a.*)

The Calcutta Port Act, 1890 (Bengal Act III of 1890), as modified up to 1st April 1902. Royal 8vo. Paper cover. Price 10*a.* (1*a.*)

MUNICIPAL DEPARTMENT.

Annual Returns of the Lunatic Asylums in Bengal with brief notes for the year 1901. Compiled by the Inspector-General of Civil Hospitals. F'cap. Paper cover. Price Re. 1. (2*a.*)

Account Rules under the Local Self-Government Act, Part VIII. F'cap. Paper cover. Price 8*a.* (.)

Annual Report of the Chemical Examiner's Department, Bengal, 1901. F'cap. Paper cover Price 8*a.* (2*a.*)

PUBLIC WORKS DEPARTMENT.

Distribution Return of Officers and Subordinates employed on Local Works in Bengal, corrected up to 31st December 1901. Super-royal 8vo. Paper cover. Price 2*a.* (1*a.*)

Embankment and Drainage Report of the Government of Bengal, Irrigation Department, for the year 1900-1901. F'cap. Boards Paper cover. Price Re. 2. (3*a.*)

Classified List and Distribution Return of Establishment corrected up to 31st March 1902. Super-royal 8vo. Paper cover. Price 4*a.* (1*a.*)

Dacca Electric Lighting License, 1902. F'cap. Paper cover. Price 14*a.* (1*a.*)

Notes on the construction of Railways in India (for students) with 5 charts. F'cap Paper cover. Price Re. 1. (1*a.*)

REVENUE DEPARTMENT.

Annual Report of the Burdwan Experimental Farm for the year 1900-1901. F'cap. Paper cover. Price 3*a.* (1*a.*)

Annual Report on the Survey Operations in Bengal during the year 1900-1901 (from 1st October 1900 to 30th September 1901). F'cap. Paper cover. Price Re. 1-8. (2*a.*)

Annual Report of the Director of the Department of Land Records, Bengal, on Settlements, for the year ending 30th September 1901. F'cap. Paper cover. Price 8*a.* (1*a.*)

The Practice and Procedure Manual, published under the authority of the Board of Revenue. Royal 8vo. Board. Paper cover. Price 12*a.* (3*a.*).

OLDER PUBLICATIONS.

A General Catalogue of all Government Publications (corrected up to 31st December, 1901) may be obtained *gratis* on application to the Officer in charge, Bengal Secretariat Book Depôt.

Publications for sale at the office of the Chief Inspector of Explosives with the Government of India.

Rules for the manufacture, possession and sale of explosives issued by each of the Local Governments and Administrations. Price 12*a*.

Rules for the transport and importation of explosives issued by the Government of India. Price 12*a*.

Rules for the transport and importation of explosives at the Port of Calcutta. Price 4*a*.

The Indian Law Reports.

Published under Authority.

THE Indian Law Reports, published under the authority of the Governor-General in Council, appear in monthly parts, published as soon as possible after the first of each month at Calcutta, Madras, Bombay, and Allahabad, and comprise four series—one for the Calcutta High Court, a second for the Madras High Court, a third for the Bombay High Court, and a fourth for the Allahabad High Court. The cases heard by the Privy Council on appeal from each High Court are reported in the series for that High Court. Cases heard by the Privy Council on appeal from Provinces in India not subject to any High Court are reported in the Calcutta Series.

The Calcutta Series is distributed by the Bengal Secretariat Book Depôt, and the Madras, Bombay, and Allahabad Series are distributed direct from Madras, Bombay, and Allahabad respectively.

In supersession of the previous advertisements, on and from the 1st January 1889 the terms of subscription and sale will be as follows for current issues as well as for back numbers of the reports from 1876:—

Terms of subscription, payable annually in advance.

For the complete series, *including postage* (Inland rate) Rs. 22-8.

Ditto, ditto (Overland rate) Rs. 28.

	Without postage.	With postage.
	Rs. A. P.	Rs. A. P.
For the Calcutta Series	10 0 0	12 8 0
,, each of the Madras, Bombay, and Allahabad Series	6 0 0	7 0 0
,, a part of the Calcutta Series purchased separately (*inclusive of postage in India*)	.....	2 0 0
,, a part of each of the Madras, Bombay, and Allahabad Series purchased separately (*inclusive of postage in India*)	.....	1 0 0

The following are the rates at which deductions will be made for parts out of print and at which duplicate copies will be supplied to subscribers when required in place of copies lost in transit, provided complaint of non-receipt is made to the Publisher within three months of the date of publication:—

	For town.	For mufassal.
	Rs. A. P.	Rs. A. P.
For the Calcutta Series, per copy ...	0 8 9	0 10 3
,, each of the Madras, Bombay, and Allahabad Series, per copy ..	0 5 3	0 5 9
,, the Calcutta Series, for the year	7 2 6	8 6 3
,, each of the Madras, Bombay and Allahabad Series, for the year	4 4 6	4 11 3

Persons desiring to subscribe for or purchase the Report should apply to—

The Superintendent, Government Press, Madras.

,, Superintendent, Government Central Press, Bombay.

,, Curator of Government Books, United Provinces of Agra and Oudh, Allahabad.

,, Officer in charge, Bengal Secretariat Book Depôt, Calcutta.

Orders and subscriptions for 1902 should be at once registered and remitted by money-order payable to the Treasurer, Bengal Secretariat, Calcutta.

ADVERTISEMENTS will be received for publication on the wrappers of the Indian Law Reports, Calcutta Series, at the following rates, payable in advance—

	One page.	Half page.	Quarter page.
	Rs.	Rs.	Rs.
For one issue ...	20	14	9
,, three issues ...	55	36	24
,, six ,, ...	100	68	45
,, nine ,, ...	145	96	64
,, twelve ,, ...	180	120	80

SEVERAL volumes of the BENGAL LAW REPORTS, from August 1868 to December 1875, and FULL BENCH RULINGS, Parts I and II, are available at the following rates:—

	Without postage.	With postage.
	Rs. A. P.	Rs. A. P.
Bengal Law Reports, for one year ...	20 0 0	22 8 0
Single copies, Rs. 2 per copy.		
Full Bench Rulings, Parts I and II ...	20 0 0	22 8 0

Obtainable at the Bengal Secretariat Book Depôt, Writers' Buildings, Calcutta.

Remittances to be forwarded to the Treasurer, Bengal Secretariat, Writers' Buildings, Calcutta.

The complete series of the INDIAN LAW REPORTS for the years 1876 to 1885, and 1890 to 1892, 1894, 1896 to 1901 having now been reprinted, are available, and may be purchased for all the years, or any particular year, on application to the Officer in charge, Bengal Secretariat Book Depôt.

The wanting parts of the Reports for the remaining years are being reprinted, and complete Reports from the beginning to date will be available shortly.

NOTICE TO SUBSCRIBERS.

SUBSCRIBERS are hereby informed that, unless complaint of non-receipt of any number is made to the Publisher of the series within three months of the date of publication, the benefits of the subscription rates for copies lost in transit will not be allowed, and full rates will be charged. The price per copy of each of the four series at subscription rates and at full rates is shown below:—

	Per copy. Subscription rate. Town.	Mofussal.
	Rs. A. P.	Rs. A. P.
Calcutta Series	0 8 9	0 10 3
Each of the Madras, Bombay, and Allahabad Series ...	0 5 3	0 5 9

	Full rate. Town.	Mofussal.
	Rs. A. P.	Rs. A. P.
Calcutta Series	2 0 0	2 0 0
Each of the Madras, Bombay, and Allahabad Series ...	1 9 0	1 0 0

Notice.

THE *CALCUTTA GAZETTE*.

The 1st March 1901.—From this date the subscription to, and postage for, the *Calcutta Gazette* will be at the following rates, payable in advance:—

PER ANNUM.	For Calcutta.	For the Mufussal, including postage.
	Rs. A.	Rs. A.
Entire *Gazette*	15 0	20 0
Parts I, IA and IB together ...	5 0	7 8
Part II	1 0	2 12
Parts III, IV and IVA together	4 0	6 0
,, V and VI together ..	2 0	3 8
Appendix (Marine Notifications)	1 0	2 12
Supplement	5 0	7 8
PER ISSUE.		
Entire *Gazette*	0 8	0 10
Supplement	0 4	0 5

N.B.—Separate Parts of each issue of the *Gazette*, and occasionally important Rules and Extracts, can be obtained from the Officer in charge, Bengal Secretariat Book Depôt, at the rate of one anna for every sixteen pages or a fraction thereof. Postage according to weight.

RATES FOR ADVERTISEMENTS in the *Calcutta Gazette*:—

Full Page, per issue	Rs. 20
Half ,, ,, ...	,, 10

Casual advertisements, 4 annas per line.

Annual Statement of the Sea-borne Trade and Navigation of the Bengal Presidency and of its Chief Port (Calcutta), and each of its Subordinate Ports—Chittagong, Balasore, Cuttack, Pooree, and Narainguge, Volumes I and II. Price Rs. 20 for 1899-1900. Published at the Calcutta Custom House. Previous years' volumes can also be obtained at the same price.

APPENDIX TO

The Calcutta Gazette.

WEDNESDAY, SEPTEMBER 10, 1902.

NOTICES TO MARINERS.

GOVERNMENT OF BENGAL—MARINE DEPARTMENT.

NOTICE TO MARINERS—No. 258.

[First Publication.]

AUSTRALIA—QUEENSLAND.

Great Sandy Strait entrance—Pilot station disestablished at Inskip point.

THE British Admiralty has given notice (No. 491 of 1902) that, after 30th June 1902, the Pilot station at Inskip point, Great Sandy strait entrance, would be discontinued.

Vessels requiring the services of a pilot through Great Sandy strait are requested to give at least 24 hours' notice to the Marine Department before departure from Brisbane, and similar Notice to the Harbour Office, Rockhampton, or Townsville, if bound from the northward.

Approximate position, lat. 25° 48½′ S., long. 153° 4′ E.

This Notice affects the following Admiralty Charts:—Moreton bay to Sandy cape, No. 1068; Great Sandy strait, No. 1030: Also, Australia Directory, vol. II, 1898, page 152, and Supplement, 1900, page 7.

E. J. BEAUMONT, COMDR., R.I.M.,
Port Officer of Calcutta.

Published for general information.

C. B. BAYLEY,
Asst. Secy., Marine Department

CALCUTTA, *the 6th September 1902.*

GOVERNMENT OF BENGAL—MARINE DEPARTMENT.

NOTICE TO MARINERS—No. 259.

[First Publication.]

AUSTRALIA—VICTORIA—PORT PHILLIP ENTRANCE.

Point Lonsdale lighthouse—Night tidal signals intended.

THE British Admiralty has given notice (No. 492 of 1902) that on and after 1st January 1903, in order to indicate the direction of the tidal streams between point Lonsdale and point Nepean *one green fixed* light during the ingoing stream, and *two green fixed* lights during the outgoing stream, will be exhibited at point Lonsdale lighthouse, below the main light.

Approximate position, lat. 38° 18′ S., long. 144° 37′ E.

This Notice affects the following Admiralty Charts:—Port Phillip, Nos. 1171a, 2747a: Also, List of Lights, part VI, 1902, No. 1109; and Australia Directory, vol. I, 1897, pages 431, 494.

E. J. BEAUMONT, COMDR., R.I.M.,
Port Officer of Calcutta

Published for general information.

C. B. BAYLEY,
Asst. Secy., Marine Department.

CALCUTTA, *the 6th September 1902.*

GOVERNMENT OF BENGAL—MARINE DEPARTMENT.

NOTICE TO MARINERS—No. 260

[First Publication.]

BAY OF BENGAL—BURMA COAST.

Rangoon river—New tidal gauge erected.

THE Bombay Government has given notice (No. 110 of 1902) that information has been received from the Principal Port Officer, Burma, Rangoon, dated 15th August 1902, that a new Tide Gauge has been erected nearly opposite the Syriam Lights. It is ready for reference.

This Notice affects the following Admiralty Chart:—Rangoon river and approaches' No. 833: Also, Bay of Bengal Pilot, 3rd Edition, 1901, page 353.

E. J. BEAUMONT, COMDR., R.I.M.,
Port Officer of Calcutta.

Published for general information.

C. B. BAYLEY,
Asst. Secy., Marine Department.

CALCUTTA, *the 6th September 1902.*

GOVERNMENT OF BENGAL—MARINE DEPARTMENT.

NOTICE TO MARINERS—No. 261.

[First Publication.]

BAY OF BENGAL—CHITTAGONG COAST.

Karnafuli river—Depth of water in the river channels.

THE Port Officer, Chittagong, has given notice that the following depth of water was found in the river channels by soundings taken on the 5th September and reduced to zero:—

	FT.	IN.
Track No. 1—Outer bar	12	6
Track No. 2—Inner bar—		
Dise on diamond	10	0
Track No 3—		
Triangle on cross and ball	23	0
Track No. 4—Guptakhally crossing—		
Tripod on diamond	15	0

E. J. BEAUMONT, COMDR., R.I.M.,
Port Officer of Calcutta.

Published for general information.

C. B. BAYLEY,
Asst. Secy., Marine Department.

CALCUTTA, *the 8th September 1902.*

GOVERNMENT OF BENGAL—MARINE DEPARTMENT.

NOTICE TO MARINERS—No. 256

[Second Publication.]

BAY OF BENGAL—BURMA COAST.

Rangoon river—The F. L. V. "Martaban" relieves temporarily the present floating light vessel at the Krishna shoal.

THE Principal Port Officer, Burma, has given notice dated the 21st August that the F. L. V. *Martaban* will relieve temporarily the present floating light vessel at the Krishna shoal on the 30th September 1902.

The light to be exhibited on that date will be a white flash of 5 seconds duration every 45 seconds.

This Notice affects the following Admiralty Charts:—Bassein river to Pulo Penang, No. 830, Koronge island to White Point, No. 823: Also, List of Lights, VI, 1901, No. 364, and Bay of Bengal Pilot, 1901, page 345.

E. J. BEAUMONT, COMDR., R.I.M.,
Port Officer of Calcutta.

Published for general information.

C. B. BAYLEY,
Asst. Secy., Marine Department.

CALCUTTA, *the 30th August 1902.*

GOVERNMENT OF BENGAL—MARINE DEPARTMENT.

NOTICE TO MARINERS—No. 257.

[Second Publication.]

BAY OF BENGAL—BURMA COAST.

Moulmein river approaches—Rock reported.

THE Bombay Government has given notice (No. 105 of 1902) that the Commander of R. I. M. S. *Dalhousie* reports the existence of a rock with 19 feet least water on it and deep water round it south of Green Island.

The rock lies S. 18° W., 1·65 miles from Amherst Pagoda.

This Notice affects the following Admiralty Charts:—Moulmein river and approaches, No. 1845, and Koronge Island to White Point, including the Gulf of Martaban, No. 823: Also, Bay of Bengal Pilot, 3rd Edition, 1901, page 374.

E. J. BEAUMONT, COMDR., R.I.M.,
Port Officer of Calcutta.

Published for general information.

C. B. BAYLEY,
CALCUTTA, *the 30th August 1902.* *Asst. Secy., Marine Department.*

GOVERNMENT OF BENGAL—MARINE DEPARTMENT.

NOTICE TO MARINERS—No. 252.

[Third Publication.]

AFRICA, EAST COAST—PEMBA ISLAND.

Ras Kegomacha—Light intended.

THE British Admiralty has given notice (No. 471 of 1902) that the Port Office, Zanzibar, reports that a *flashing* light, showing a *red flash* and a *white flash* alternately *every ten seconds*, elevated 125 feet above high water, will shortly be established on Ras Kegomacha, Pemba island.

The light is dioptric and will be shown from an iron framework structure painted white.

Approximate position, lat. 4° 52′ S., long. 39° 40¾′ E.

Further Notice will be given when this light has been established.

This Notice affects the following Admiralty Charts:—Delagoa bay to cape Guardafui, No. 597; Zanzibar to Malindi, No. 664; Chale point to Pangani, No. 1390; West coast of Pemba island, No. 1812: Also, List of Lights, part VI, 1902, No. 119; Africa Pilot, part III, 1897, page 465; and Supplement, 1900, page 37.

E. J. BEAUMONT, COMDR., R.I.M.,
Port Officer of Calcutta.

Published for general information.

C. B. BAYLEY,
CALCUTTA, *the 22nd August 1902.* *Asst. Secy., Marine Department.*

GOVERNMENT OF BENGAL—MARINE DEPARTMENT.

NOTICE TO MARINERS—No. 253.

[Third Publication.]

BAY OF BENGAL—ORISSA COAST.

Dhamrah river—E. Buoy shifted.

THE Port Officer, Cuttack and Balasore ports, has given notice that the E. buoy has been moved 270 feet S. E. ½ S. magnetic, of its former position, and now bears N. W. ½ W. magnetic, distant 6,200 feet from the column of the old light-house.

E. J. BEAUMONT, COMDR., R.I.M.,
Port Officer of Calcutta.

Published for general information.

C. B. BAYLEY,
CALCUTTA, *the 23rd August 1902.* *Asst. Secy., Marine Department.*

GOVERNMENT OF BENGAL—MARINE DEPARTMENT.

NOTICE TO MARINERS—No. 254.

[Third Publication.]

KOREA, WEST COAST.

Sir James Hall group—Shoals in the vicinity.

THE British Admiralty has given notice (No. 489 of 1902) of the existence of the undermentioned shoals in the vicinity of the Sir James Hall group :—

a. A sandy shoal, with a depth of 4½ fathoms over it, situated with the north-western extremity of Peng yong Do bearing S. 71° W., distant 3½ miles, and the 455 foot hill on the same island, S. 27° E.

Approximate position, lat. 38° 0′ N., long. 124° 41½′ E.

There is another sandy shoal, with a depth of 4¾ fathoms over it, situated at a distance of 6 cables S. 61° E. from the above.

b. A shoal, composed of sand and shells, with a depth of 3¾ fathoms over it, situated with western extremity of Kulin Do bearing N. 22° W., distant 14 cables, and northern extremity of Te chong Do, S. 79° W.

Approximate position, lat. 37° 54′ N., long. 124° 58′ E.

c. A shoal patch, with a depth of 2½ fathoms over it, situated with the southern extremity of Erha Do bearing N. 81° E., distant 2¾ miles, and southern extremity of Changlin Do, N. 24° W.

Approximate position, lat. 37° 44′ N., long. 125° 10½′ E.

Certain other shoals in the vicinity of Suni Do and Rooper harbour have been found, for which reference should be made to the new edition of Chart No. 1258, which will be issued.

(*Variation 4° Westerly in 1902.*)

This Notice affects the following Admiralty Charts :—Approaches to Ping yang inlet No. 1257; approaches to Seoul, No. 1258 : Also, China Sea Directory, vol. IV, pages 45, 46, 47, 48; and Supplement, 1898, page 3.

E. J. BEAUMONT, COMDR., R.I.M.,
Port Officer of Calcutta.

Published for general information.

C. B. BAYLEY,
CALCUTTA, *the 25th August 1902.* *Asst. Secy., Marine Department.*

GOVERNMENT OF BENGAL—MARINE DEPARTMENT.

NOTICE TO MARINERS—No. 255.

[Third Publication.]

BAY OF BENGAL—CHITTAGONG COAST.

Karnafulli river—Depth of water found in the river channels.

	Ft.	in.
Track No. I—Outer bar	12	9
Track No. II—Inner bar—		
Diso on diamond	10	3
Batten beacon on pillar	10	6
Track No. III—		
Triangle on cross and ball	23	0
Track No. IV—Guptakhally crossing—		
Tripod on diamond	15	0

E. J. BEAUMONT, COMDR., R.I.M.,
Port Officer of Calcutta.

Published for general information.

C. B. BAYLEY,
CALCUTTA, *the 25th August 1902.* *Asst. Secy., Marine Department.*

REGISTERED No., C 209.]

No. 37 of 1902.

SUPPLEMENT TO

The Calcutta Gazette.

WEDNESDAY, SEPTEMBER 10, 1902.

OFFICIAL PAPERS.

[Non-Subscribers to the GAZETTE *may receive the* SUPPLEMENT *separately on payment of five rupees per annum if delivered in Calcutta, or seven rupees and eight annas if sent by post.]*

CONTENTS.

	Page
REPORT on the Maritime Trade of Bengal for the year 1901-1902 by the Collector of Customs, Calcutta	1255
Resolution on the Report of the Agricultural Branch of the Department of Land Records and Agriculture for the year 1901-1902	1262
Resolution Reviewing the Commissioners' Reports on the working of the Puri Lodging-house Act during the year 1901-1902	1264
Resolution on the Annual Report of the Port Officer, Calcutta, for the year 1901-1902	1267
Weather and Crop Report for the week ending the 8th September 1902	1268
Prices-current (retail and wholesale) of food-grains and salt in the head-quarters station bazars of the districts of Bengal on the 31st August 1902	1272
ABSTRACT statement showing Tollage on Canals in Bengal classed as Major and Minor Works for the month of July 1902	1278
Circular and Eastern Canal for the week ending Saturday the 6th September 1902	1279
Abstract of the Results of Meteorological Observations taken at the Alipore Observatory in the month of August 1902	1280
Results of the Meteorological Observations taken at the Alipore Observatory from 31st August to 6th September 1902	1281
Eastern Bengal State Railway during the month of May 1902	1282
Weekly Return of Traffic Receipts on Indian Railways ...	1284

The 2nd September 1902.—The following extracts from the Report of the Collector of Customs, Calcutta, on the Administration of the Customs Department in the year 1901-1902, and the letter from the Board of Revenue submitting the report to Government, are published for general information.

E. W. COLLIN,
Offg. Secy. to the Govt. of Bengal.

REPORT ON THE MARITIME TRADE OF BENGAL FOR THE YEAR 1901-1902, BY THE COLLECTOR OF CUSTOMS, CALCUTTA.

CHIEF PORT CALCUTTA.

GENERAL SUMMARY.

THE aggregate sea-borne trade of Calcutta with foreign countries and with other Indian ports for the past five years is shown in the subjoined statement :—

	1897-98.	1898-99.	1899-1900.	1900-1901.	1901-1902.	Increase or decrease in 1901-1902 as compared with 1900-1901.	Percentage of difference.
(1) FOREIGN TRADE.	Rs.	Rs.	Rs.	Rs.	Rs.	Rs.	
Imports.	Lakhs.*	Lakhs.	Lakhs.	Lakhs.	Lakhs.	Lakhs.	
Merchandise	29,98·75	29,65·23	32,21·34	33,82·30	36,13·04	+ 2,30·84	+ 6·8
Gold	1,59·71	2,33·83	3,70·70	4,52·89	3,11·35	— 1,41·54	— 31·3
Silver	1,66·39	1,28·38	1,89·86	2,06·23	2,45·36	+ 39·13	+ 18·9
Total Imports ...	33,24·85	33,27·43	37,81·90	40,41·32	41,69·74	+ 1,28·42	+ 3·2
Exports.							
Foreign merchandise re-exported	17·06	20·56	22·00	23·99	20·28	— 3·71	— 15·4
Indian merchandise ...	44,02·37	44,81·21	49,41·07	54,19·82	53,60·75	— 59·07	— 1·1
Gold	·03	·01	·05	9·10	1,51·43	+ 1,42·33	+ 1,564·7
Silver	1,18·28	75·13	39·63	53·63	53·56	— ·07	— 10·1
Total Exports ...	45,37·74	45,76·91	50,03·35	55,06·54	55,86·02	+ 79·48	+ 1·4
Aggregate Foreign Trade ...	78,62·59	79,04·34	87,85·25	95,47·86	97,55·76	+ 2,07·90	+ 2·2

* In this and all other statements in this review showing rupees, the value is stated in lakhs only, followed by two places of decimals (which is equivalent to omitting "000").

	1897-98.	1898-99.	1899-1900.	1900-1901.	1901-1902.	Increase or decrease in 1901-1902 as compared with 1900-1901.	Percentage of difference.
(II) COASTING TRADE.	Rs.	Rs.	Rs.	Rs.	Rs.	Rs.	
	Lakhs.	Lakhs.	Lakhs.	Lakhs.	Lakhs.	Lakhs.	
Imports.							
Indian produce	6,03·20	3,79·26	3,60·27	4,28·12	4,54·40	+ 26·28	+ 6·1
Foreign merchandise	27·15	30·25	40·75	53·31	33·75	— 19·56	— 36·7
Gold	·48	·75	28	·37	·54	+ ·17	+ 46·6
Silver	51·13	23·70	82·41	2,47·38	90·18	— 1,48·20	— 59·9
Total Imports ..	6,82·05	4,34·05	4,05·71	7,30·18	5,87·87	— 1,41·31	— 19·3
Exports.							
Indian produce	5,53·28	5,45·62	6,30·27	6,71·05	5,71,90	— 99·15	— 14·7
Foreign merchandise	1,44·64	1,29·77	1,13·36	88·12	84·18	— 3 94	— 4·4
Gold	3·44	1·35	·04	·47	·64	+ ·17	+ 36·5
Silver	94·56	54·85	1,56·03	1,23·65	81·16	— 42·49	— 34·3
Total Exports ...	7,95·93	7,31·59	9,08·70	8,83·29	7,37·88	— 1,45·41	— 16·4
Aggregate Coasting Trade ...	14,77·97	11,65·64	14,04·41	16,12·47	13,25·75	— 2,86·72	— 17·7
Aggregate Trade	93,40·52	90,69·98	1,01,89·66	1,11,60·33	1,10,81·51	— 78·82	·7

In this statement transactions on account of Government are included; but it should be noted that such transactions are excluded from all other statements and figures embodied or annexed to this report, and are dealt with in a separate section of it.

2. It will be observed that the aggregate trade has fallen slightly, by 79 lakhs or under 1 per cent. But this decrease is caused by smaller transactions in the coasting trade, for the total foreign trade has expanded in the past year, and is the highest of any year shown. The decrease in the coasting trade is to be found in exports of Indian produce, imports having improved considerably. The falling off is really a matter for congratulation, as an evidence that the stimulus to export of food-grains provided in the two previous years by the requirements of famine-stricken tracts had ceased.

3. The statement shows fluctuations in treasure separately, and the result of the combined foreign and coasting transactions was a net importation of $3\frac{3}{4}$ crores as compared with a net importation of $7\frac{1}{4}$ crores in the previous year. The corresponding figures for foreign and coasting trade separately are $3\frac{1}{2}$ crores and 18 lakhs, respectively, net importation, as against 6 and $1\frac{1}{2}$ crores in the previous year. In merchandise in the foreign trade exports exceeded imports by 18 crores, and the aggregate trade in both increased by 2 crores, or 1·9 per cent. In imports the heaviest increases were in wood and its manufactures, jewellery, carriages, and carts, machinery and millwork, salt, silk manufactures, and paper and pasteboard: the decreases were chiefly in railway materials, umbrellas, and spices. Under exports of Indian produce, the more important increases were in cotton twist and yarn, drugs and narcotics, raw hemp, raw cotton, and oilseeds: decreases occurred under tea, indigo, hides and skins, grain and pulse, and woollen manufactures. Imports were greatest in September, October, and January: exports attained the highest values in October, November, and December, while the total trade of Calcutta reached its highest value in October, November, and January.

4. In the coasting trade in merchandise there was an increase of 1·4 per cent. in imports and a decrease of 13·5 per cent. in exports. The aggregate coasting trade in merchandise was less by 7·7 per cent.

5. The following table gives the ranges of prices of the more representative articles, taking the year 1900-1901 as the basis of comparison :—

	1897-98.	1898-99.	1899-1900.	1900-1901.	1901-1902.
	Per cent.	Per cent.	Per cent.	Per cent.	Per cent.
Imports.					
Cotton twist and yarn ... Per lb.	86·2	80·1	83·2	100	97·4
Grey cotton piece-goods .. ,, yd.	91·3	87·0	91·2	100	100·4
Iron (bar) ... ... ,, cwt.	83·7	80·3	86·8	100	87·9
,, (sheets, not galvanized) ,, ,,	74·2	75·4	82·6	100	94·9
,, (sheets, galvanized) ... ,, ,,	83·6	79·2	91·8	100	86·0
Steel ... ... ,, ,,	80·0	77·4	85·7	100	79·2
Kerosine oil ... ... ,, gal.	101·3	137·8	98·6	100	97·5
Salt .. .. ,, md.	113·2	102·2	98·0	100	98·7
Sugar, refined ... ... ,, cwt.	101·0	96·3	96·9	100	91·1
Woollen piece-goods ... ... ,, yd.	95·1	94·5	92·1	100	89·7
Total Index price for Imports ...	909·6	910·3	908·9	1,000	920·8
Exports.					
Coal .. .. Per ton	91·5	93·6	98·3	100	98·5
Cotton, raw ... ... ,, cwt.	87·2	78·6	81·7	100	88·7
Opium ... ... ,, chest	64·1	77 0	89·2	100	95·4
Indigo ... ... ,, cwt.	119·3	104·4	126·3	100	102·4
Rice ... ... ,, ,,	114·0	101·4	97·6	100	105·0
Wheat ... ... ,, ,,	93·0	88·8	99·8	100	88·1
Hides, raw .. .. ,, ,,	98·0	98·2	97·8	100	98·2
Jute, raw ... ... ,, ,,	76·1	79·3	94·4	100	90·5
,, gunny-bags ... ... ,, No.	87·2	85·8	95·7	100	94·2
,, gunny cloth ... ... ,, yd.	94·1	94·0	94·1	100	101·1
Shellac ... ... ,, cwt.	104·1	101·5	100·7	100	132·8
Linseed ... ... ,, ,,	69·5	57·9	69·1	100	104·7
Rapeseed ... ... ,, ,,	87·4	76·8	76·8	100	92·0
Silk, raw ... ... ,, lb.	98·5	98·9	110·5	100	52·0
Tea .. .. ,, ,,	100·3	102·1	103·1	100	91·2
Total Index price for Exports ...	1,383·9	1,337·7	1,405·1	1,500	1,434·8
Aggregate Index price ...	2,293·5	2,247 9	2,314·0	2,500	2,355·6
Average rate of exchange ..	1s.3 1/16d.	1s.3 1/16d.	1s.4 1/16d.	1s.3 1/16d.	1s. 4d.

The table shows that both volume and value of the total foreign trade of Calcutta have risen in the past year, but the value, owing to a lower range of prices, not in proportion to the volume. Prices generally fell by 5·7 per cent.; in imports by 7·9 per cent., and in exports by 4·3 per cent., but the level in both cases, though lower than in the previous year, is higher than in 1899-1900. All items of imports, with the exception of grey cotton piece-goods, fell in average price, and 10 out of 15 items of export, the exceptions being shellac, rice, linseed, indigo, and gunny cloths.

FOREIGN TRADE.

6. The following statement shows the value of the import and export trade of Calcutta for the past five years grouped according to the classes under which they are shown in the Government accounts:—

	Imports.			Exports.		
	1899-1900.	1900-1901.	1901-1902.	1899-1900.	1900-1901.	1901-1902.
	Rs. Lakhs.	Rs. Lakhs.	Rs. Lakhs.	Rs. Lakhs.	Rs. Lakhs.	Rs. Lakhs.
I.—Animals (living)	11·25	20·83	23·43	3·57	3·30	2·90
II.—Articles of food and drink ...	2,68·60	3,45·20	3,47·00	13,94·39	13,40·35	10,94·76
III.—Metals and manufactures of metals—						
(A) Hardware and cutlery ...	62·30	77·39	66·03	1·25	1·96	1·87
(B) Metals	2,32·10	3,10·19	3,16·19	6·16	11·82	2·18
(C) Machinery and mill-work	96·98	1,01·78	1,50·05	·71	1·06	·80
(D) Railway plant and rolling-stock	95·71	55·07	22·93	·01	·07	·07
Total of No. III ...	4,87·09	5,53·13	5,55·20	8·13	14·93	4·92
IV.—Chemicals, drugs, medicines, and narcotics, and dyeing and tanning materials ..	64·00	75·75	75·71	7,29·05	8,12·21	7,98·85
V.—Oils	1,90·91	1,78·21	2,09·92	24·70	30·01	33·15
VI.—Raw materials and unmanufactured articles	29·28	36·44	38·20	19,53·60	22,48·52	23,21·54
VII.—Articles manufactured and partly manufactured—						
(A) Yarns and textile fabrics ...	16,67·85	16,07·94	16,00·52	6,99·57	8,19·52	9,64·28
(B) Apparel (excluding hosiery)	45·90	44·61	40·23	8·62	8·29	11·97
(C) Other articles	2,08·25	2,27·03	2,32·72	1,36·31	1,35·07	1,29·66
Total of No. VII ...	19,22·00	19,60·58	19,60·47	8,44·50	9,63·48	11,05·91
Total of merchandise ...	29,66·13	31,79·44	32,68·03	49,57·84	54,22·40	53,62·03
Treasure	5,60·56	5,74·93	5,11·70	30·67	62·72	54·65
Grand Total ...	35,26·69	37,54·37	37,80·63	49,97·51	54,85·12	54,16·68

Imports show an advance in all groups except those for chemicals, dyeing materials, &c. (IV), and for yarns and textile fabrics (VIIA). The fall in the former case is attributed chiefly to diminished receipts of chemicals for paper-making, and in the latter case to contraction of the trade in woollen shawls. Group I, animals, consists almost entirely of horses from Australia. The advance in Group II is accounted for by salt; jute and electrical machinery are chiefly responsible for the rise in Group III. The increase in Group V represents more kerosine oil from Russia, and in Group VI it is entirely in precious stones.

7. In exports there was a decline in the first four groups, and an advance in the remainder. The falling off in Group I was very small, and in Group II it was caused by a contraction in shipments of rice. Copper accounts for the decline in Group III, and indigo in Group IV. Increased shipments of castor oil explain the greater trade in Group V and raw jute and oilseeds account for that in Group VI. The increase in cotton twist and yarn is entirely responsible for the advance in Group VII.

With reference to the distribution of the trade with different countries, it is important to note that the figures throughout refer only to the port of destination or exportation as shown in shipping bills and bills-of-entry, and should not be taken as indicating the country of final destination or of production, as the case may be.

IMPORTS.

(FOREIGN TRADE.)

8. Imports represented 37·8 per cent. of the aggregate value of the foreign trade in merchandise during the year. Cotton goods were, as usual, the most important item, but the proportion they represent of the total imports fell from 50·02 per cent. of the

previous year to 48·84 per cent. Next to cotton goods come metals, 9·67 per cent. ; oils 6·42 per cent. ; sugar 5·04 per cent. ; machinery and millwork 4·59 per cent. ; woollen goods 2·18 per cent. ; hardware and cutlery 2·01 per cent. ; salt 1·98 per cent. ; jewellery 1·80 per cent. ; liquors 1·45 per cent. ; apparel 1·41 per cent. ; drugs and narcotics 1·37 per cent. ; provisions ·99 per cent. ; spices ·98 per cent. ; and railway materials ·71 per cent.

* * * Jewellery and precious stones have shown a remarkable expansion in the past year, their total value amounting to 59 lakhs. Of this amount, 53 lakhs represented precious stones and pearls, but chiefly the latter, which have risen considerably in price. The increased trade was in the latter half of the year, and may be attributed to the demand for the approaching Coronation ceremonies at Delhi. The value of carriages and carts, &c., rose by 82·7 per cent., or from 6¾ to 12⅓ lakhs, owing to large receipts of cars for the local Tramway Company, also of rolling-stock for various light railways. In spite of local competition, there was a marked rise of 33·5 per cent. in the value of paper imported, which amounted to 12⅓ lakhs; the increase was largest in paper for printing. Imports of wood and manufactures of wood rose to a value of nearly 10 lakhs, increasing by 277·2 per cent. A considerable quantity of teakwood from Siam and of "other" descriptions of wood from the United States and Canada was imported in the past year.

* * * * * * * *

EXPORTS.

FOREIGN TRADE.

27. Exports amount to 62·2 per cent. of the aggregate value of the foreign trade in merchandise during the year.

Raw jute, the chief item, represents 20·40 per cent. of the total exports as against 19·18 per cent. in the previous year. Jute manufactures follow, with a percentage of 16·25 per cent., showing a considerable rise from the 14·37 per cent. of the previous year. Next in order of importance comes tea 13·31 per cent.; opium 11·68 per cent.; oilseeds 9·70 per cent.; hides and skins 8·37 per cent.; grain and pulse 6·82 per cent.; indigo 2·32 per cent.; lac 1·79 per cent.; raw cotton 1·52 per cent.; cotton twist and yarn 1·34 per cent.; raw silk 1·11 per cent.; and coal and coke 1·06 per cent.

* * * * * * * *

47. DISTRIBUTION OF FOREIGN TRADE OF CALCUTTA BY COUNTRIES.

The following table shows how the trade of Calcutta with foreign countries was distributed in the past three years:—

	Imports.			Exports.			Percentage which the total of each country bears to the whole.	
	1899-1900.	1900-1901.	1901-1902.	1899-1900.	1900-1901.	1901-1902.	In 1900-1901.	In 1901-1902.
	Rs. Lakhs.	Rs. Lakhs.	Rs. Lakhs.	Rs. Lakhs.	Rs. Lakhs.	Rs. Lakhs.		
Europe—								
United Kingdom	25,37·41	25,27·04	25,93·63	18,15·13	18,87·77	17,68·18	47·78	47·42
Germany	62·80	1,00·39	1,20·86	4,97·70	6,25·71	5,69·03	7·86	7·52
France	14·77	18·49	24·98	2,38·30	2,46·79	2,70·25	3·26	3·20
Austria-Hungary	78·05	86·86	94·35	95·23	1,34·75	1,16·24	2·40	2·30
Italy	26·37	29·62	28·93	1,00·72	1,20·17	95·55	1·65	1·36
Belgium	75·69	90·05	1,05·50	54·52	42·38	32·24	1·43	1·60
Russia	1,35·91	1,15·26	1,52·54	2·71	9·26	11 80	1·35	1·79
Other countries	2·77	1·87	3·93	27·29	76·07	56·95	·84	·83
Total Europe ...	29,23·77	29,60·98	31,23 72	28,21·90	31,42·90	29,20·52	66·19	65·72
Africa—								
Mauritius	29·86	41·70	34·79	78·74	95·25	81·46	1·44	1·26
Egypt	7 06	8·32	14·30	44·51	39·10	71·53	·51	·93
Natal	18·93	·30	·30	32·61	32·36	45·04	·35	·49
Cape Colony	49·58	·05	·04	27·83	27·17	31·42	·29	·34
Other countries in Africa	1·46	1·16	1·09	16·83	14·44	14·08	·15	·18
Total Africa ...	1,06·91	51·53	50·52	1,96·52	2,08·32	2,43·53	2·81	3·20
America—								
United States	59·96	56·71	51·14	6,55·21	6,13·96	6,95·59	7·26	8·12
South America	...	...	...	93·18	77·83	89·42	·84	·97
Other countries in America	2·64	·02	2·17	23·32	20·15	43·70	·26	·50
Total America ...	62·62	56·73	53·31	7,74·71	7,17·74	8,28·71	8·36	9·59
Asia—								
China	76·66	1,02·40	99·48	4,15·69	4,56·98	5,74·59	6·06	7·33
Ceylon	83·27	1,38·19	92·06	2,28·28	2,87·26	1,89·53	4 60	3·06
Straits Settlements	64·55	84·78	84 48	2,71·00	3,37·34	3,08·44	4·56	4·27
Arabia (including Aden) ...	12·44	17·12	23·67	50·55	50·94	55·85	·74	·86
Java	18·53	22·39	27·80	6·62	11·12	14·04	·34	·46
Japan	25·35	30·76	4·81	30·49	16·52	25·72	1·05	·33
Turkey in Asia	·04	·25	·09	18·58	20·13	28·80	·33	·31
Other countries in Asia ...	2·85	4·32	7·68	30·65	40·14	37·77	·48	·50
Total Asia ...	2,83·59	4,50·30	3,40·07	10,51·98	12,30·43	12,34·34	18·16	17·13
Australasia	1,40·80	2,25·83	2,13·01	1,53·46	1,85·73	1,99·58	4·46	4·37
Grand Total ...	35,26·69	37,54·37	37,50·63	40,97·51	54,85·12	54,16·68	100·00	100·00

* * * * * * * *

The value of the trade of Calcutta passing through the Suez Canal was 69½ crores in 1901-1902, against 67½ crores in 1900-1901, but the proportion of the total trade of the port using this route increased from 73 to 75·6 per cent.

United Kingdom.—The proportion of the trade of Calcutta with the United Kingdom shows a small decrease. Imports into Calcutta increased by 66 lakhs, the increase being most marked in machinery and millwork, salt, carriages, and ships or parts of ships. In exports, on the other hand, there was a fall of 120 lakhs chiefly in tea and jute manufactures.

Continent of Europe.—The trade with the Continent of Europe, which has been advancing for some years, received a slight check, which did not, however, extend to France and Russia. Imports into Calcutta improved by 86 lakhs, the improvement being chiefly noticeable in mineral oil, sugar, cotton goods and metals. Exports, on the other hand, declined by more than a crore, and are mainly accounted for by a restricted trade in hides and skins, indigo and lac.

United States of America.—There was an advance of only 16 lakhs in the trade with this country, but the fluctuations in some of the articles were very pronounced; jute manufactures increased by 87 lakhs, and raw jute and lac improved in value by 12 and 7 lakhs respectively. Decreases occurred principally in indigo, hides and skins, kerosine oil, caoutchouc and oilseeds.

Rest of America.—Here again there was an advance of 31 lakhs, attributed mainly to jute manufactures, and in a lesser degree to grain and pulse.

Mauritius, Cape Colony and Natal.—The trade with these countries shows a decline of 23 lakhs. Shipments of grain and pulse fell off in value by 18 lakhs, and receipts of sugar declined by 8 lakhs.

Egypt.—Trade with this country is again reviewed separately. It is chiefly a transhipment trade so far as exports from Calcutta are concerned, which are frequently shipped to "Port Said for orders," the real destination not being stated. Imports improved by 5½ lakhs, which is practically covered by a rise of 4½ lakhs in sugar and a lakh in salt. Exports receded by 32 lakhs, which is fully accounted for by a fall of a similar amount in seeds, chiefly linseed.

Rest of Africa.—The trade with the rest of Africa was stationary.

Eastern Asia.—The total trade advanced by 27 lakhs. Imports declined by 71 lakhs, but exports rose by nearly a crore. In the case of the former, sugar and spices contributed to the decline, and in that of the latter, cotton twist, jute manufactures, opium and raw cotton to China accounted for the expansion.

Western Asia.—Here again there was a rise in value. Imports rose by 7 lakhs and exports by 6 lakhs. The former is entirely accounted for by increased importations of salt from Arabia, and the latter by larger shipments of rice and indigo to Turkey in Asia: against this there were smaller shipments of rice to Arabia.

Ceylon.—The trade with this island declined by 144 lakhs, 46 lakhs of which represent imports and 98 lakhs exports. Under imports, treasure, most of which was transhipped from Australia, contracted by nearly 47 lakhs. The contraction was confined to gold, silver increasing by 4 lakhs. Under exports grain and pulse show a fall of 99 lakhs.

Australasia.—The treasure coming from Australia has been mentioned under Ceylon above. In general, Australasian trade with Calcutta receded by 9 lakhs: imports of wheat fell off by nearly 8½ lakhs, and shipments of tea by nearly 6 lakhs. On the other hand, horses advanced by almost 3 lakhs, and shipments of manure and jute manufactures substantially increased.

* * * * * * * *

CUSTOMS REVENUE.

(FOREIGN TRADE.)

51. The revenue realised in the past year from Customs duties amounted to 414 lakhs representing an increase of 2 per cent., and giving the highest total collections recorded If the proceeds on salt imported into Calcutta, but paid into district treasuries for clearances from inland bonded warehouses amounting to over 30 lakhs, be added, the total revenue becomes 444½ lakhs, equivalent to an increase of 3 per cent. Deducting refunds and drawbacks (which amounted to 4·77 lakhs, as compared with 4·70 lakhs in the previous year), the net revenue was 440 lakhs, giving an improvement of 8 per cent.

The fluctuations of the more important articles of trade, upon which the Customs revenue depends, have been discussed in the previous paragraphs of this report, and there is little to add to them. The revenue under Schedule III of the tariff was 254 lakhs and represents 61·4 per cent. of the total trade. Of this amount, 233 lakhs accrued from salt and 21 lakhs from liquors. Under Schedule IV, oils account for 6·2 per cent. of revenue, equivalent to 25½ lakhs, whilst metals contributed 3·7 per cent. Cotton goods represent a percentage of 12·4 per cent. ; while articles of food and drink have given 3 per cent. of revenue, of which sugar provided 2·2 per cent. The receipts from countervailing duties on sugar show an increase of 5 lakhs in the past year, producing as much as 12 lakhs, or 2·9 per cent. of the total revenue, as compared with about 7 lakhs in the previous year and 2 lakhs in 1899-1900. Fourteen and-a-half lakhs were derived from exports of rice and paddy, equivalent to 3·5 per cent. of the whole, as against 4·8 per cent. in the previous year. No other articles have contributed more than 1 per cent. to the Customs revenue of Calcutta.

The excise duty on local cotton manufactures expanded in the past year by 16·3 per cent. The collections were Rs. 5,863, as against Rs. 5,038 in the previous year.

A remark may be added here on the amount of revenue repaid to importers either by refund or drawback. In the past year the total sum so repaid was Rs. 4,77,355, as compared with Rs. 4,70,453 in the previous year. Of this amount, Rs. 2,12,808 represents refund of duty on salt. As much as Rs. 1,01,632 is due to refund of the difference between the specific and *ad valorem* duty payable on arms : this represents 50·4 per cent. of the total revenue collected on arms and ammunition which, in the past year, amounted to Rs. 2,01,457. A further sum of Rs. 43,837 represents refund of countervailing duty on sugar, caused by the adjustment from time to time of these duties. These three heads—salt, arms, and countervailing duties on sugar—account for 75·1 per cent. of the total amount repaid. Drawback amounted to Rs. 17,440.

* * * * * * * *

No. 901B., dated Calcutta, the 28th July 1902.

From—H. WHEELER, Esq., Secretary to the Board of Revenue, L.P.,
To—The Secretary to the Government of Bengal, Financial Department.

Member in charge :
THE HON'BLE MR. BOURDILLON, C.S.I.

I AM directed to submit, for the information of Government, the report compiled by the Collector of Customs, Calcutta, on the maritime trade of Bengal for the year 1901-1902.

* * * * * * *

3. The Collector of Customs, when furnishing the statistics under the different heads, has briefly indicated the causes to which the fluctuations noticeable may be attributed, and the Board do not propose to rediscuss them at length. Taking the foreign trade of the port of Calcutta, the value of which, during the year under review, was the highest on record, the Board note as of interest on the import side (*a*) the large increase in the value of precious stones imported, which is attributed to the preparations for the Coronation ceremonies; (*b*) the greater importations of carriages and carts, due to the demand for rolling-stock on the Calcutta Tramways and on light railways; (*c*) the unprecedented number of horses for army remounts brought up from Australia, surpassing even that of the preceding year; and (*d*) an increase of 17·8 per cent. in the value of arms and ammunition imported. The figures of the liquor trade seem to indicate an increase in the popularity of malt liquors at the expense of spirits and wines, and a rise of 14·3 per cent. in the value of matches imported would seem to be an indication of prosperity, the benefit of which, however, has mainly gone to Japan. The importations of unwrought iron and steel both show a large advance, the former being favoured by lower prices, but the latter being in spite of a rising market. The displacement of English by Belgian steel is very marked.

4. The large increase in the value of machinery imported, noticeably for jute, cotton, and sugar mills, would appear a favourable sign, and the increasing popularity of electric lights and fans is strikingly exemplified by the figures. The depression in the tea industry showed itself in a fall of six lakhs in the value of the machinery imported for gardens. The importations of mineral oil both

from Russia and Burma increased considerably under the influence of cheap prices combined with some degree of speculation, and the extraordinarily heavy cargoes of salt, induced by cheap freights, have necessitated the preparation of special proposals for the extension of the bonding accommodation available in Calcutta.

5. The statistics showing the importation of sugar, with an increase in quantity of 11·7 per cent. over the figures of the previous year, including an increase for beet sugar in particular, of no less than 66·4 per cent., indicate that the countervailing duties imposed have not so far seriously interfered with the trade, and the results of the most recent legislation on the point will be watched with interest. The operations of the new Sugar-refining Company in Bihar have scarcely had an effect on the market so far.

Importations of tobacco, noticeably in the form of cigarettes, for which there seems to be a growing taste among the natives, were again very heavy.

6. On the export side, also, the trade of Calcutta exhibits various points of interest. The coal trade, under the influence of the competition of Welsh coal, sustained a check in its hitherto rapid progress, though still recording an advance, and raw cotton also, thanks to a better crop outturn, was shipped in considerably larger quantities. The exportation of food-grains showed a smart decline, though, in so far as the falling off in the quantities shipped to Indian ports betokened a recovery in the prosperity of districts previously affected by scarcity, the figures afford ground for congratulation. The effect of famine conditions is also seen in the trade in hides and horns, which having been unduly stimulated by the previous great mortality amongst cattle is now resuming more normal conditions, though the supply of hides is now somewhat below the demand. The large trade in goat skins to the United States is deserving of mention. The figures of indigo exported bear evidence to the keen competition of the synthetic dye and the precarious position of the industry, but the value of the important trade in jute was the highest yet recorded, and the year must have been a profitable one for all concerned. For tea, as for indigo, the year was a bad one, though at its close there were some signs of improvement.

7. Looking to the trade of the minor ports in Bengal, the most noticeable feature is the rapid advance of Chittagong. With the advantages of direct steamer communication between that port and England, large shipments of salt, railway materials and rice on the import side, and heavy exports of jute and tea contributed mainly to this result. As in previous years, the trade of the Orissa ports is gradually dwindling.

8. It is noticeable that the revenue derived during the year from Customs duties (414 lakhs) was the highest on record.

* * * * * * *

RESOLUTION ON THE REPORT OF THE AGRICULTURAL BRANCH OF THE DEPARTMENT OF LAND RECORDS AND AGRICULTURE FOR THE YEAR 1901-1902.

REVENUE DEPARTMENT—AGRICULTURE.

Calcutta, the 5th September 1902.

RESOLUTION—No. 1765T R.

READ—

The Report of the Agricultural Branch of the Department of Land Records and Agriculture for the year 1901-1902.

Letter No. 678A, dated 30th July 1902, from the Board of Revenue, submitting the report with their remarks.

Read again—

Resolution on the same report for 1900-1901.

IN accordance with suggestions approved by the Government of India, the present report on the Agricultural Branch of the Department of Land Records and Agriculture does not notice work done in connection with maintenance of land records: this topic will in future be dealt with in the Director's Settlement Report.

The Director Mr. P. C. Lyon, and the Officiating Director, Mr. C. G. H. Allen, who succeeded Mr. Lyon on the 4th November 1901, spent altogether 160 days on tour, in the year under report, in connection with settlements, land records and agricultural work, and made useful inspections.

2. *Scientific Enquiries.*—Of the agricultural enquiries made during the year the most important are those as to the effect of the imposition of the countervailing duties on the prospects of the sugar-refining industry, and as to the alleged deterioration of jute. Under the last named head, experiments are being conducted with selected jute seed at the Burdwan and Chittagong farms, on lines suggested by the Reporter on Economic Products. On both subjects special reports will be awaited.

3. *Experimental Farms and Experiments in Government Estates and Wards' Estates.*—Experiments with manures were continued at the Burdwan and Dumraon Farms, and it is claimed that the experiments conducted at Burdwan show that a high rate of profit is to be got by applying carefully selected manures to rice, sugarcane and potatoes and especially by green manuring. The Burdwan Farm and the Sripur Farm in the Hathwa Estate were well managed, but the Dumraon Farm not so well during the year. The Inspector-General of Agriculture has advised with regard to the future management of the last named Farm. The Chittagong farm has continued to attract much local interest. The question of establishment of an Experimental Farm at Pusa, to which reference was made in last year's Resolution, is still unsettled.

The Director again urges the necessity for a closer supervision of the money expended on agricultural experiments in Government Estates and Wards' estates and proposes to increase the number of travelling overseers. Mr. Lyon stated in his Report for the year 1900-1901, that a travelling overseer had been appointed for the district of Backergunge to visit the various estates managed by the Collector and to advise generally in matters connected with agricultural improvement. On this it was ordered that the results obtained by this appointment in Backergunge should be reported. The Director has not, however, mentioned the result of the experiment in the Backergunge district; and it will be best that he should deal with the matter in a separate report.

It is understood that the Board will favour Government with their views on the expediency or otherwise of creating central agencies or farms in the case of Wards' estates.

4. *The Sibpur Agricultural class.*—The success of the Sibpur Agricultural students in obtaining employment both in Government service and under private landowners, which is noticed in paragraph 48 of the Report is very satisfactory.

5. *Sericulture.*—The efforts of the Bengal Silk Committee to assist production of healthy silk-worms were attended, except in the district of Birbhum, with successful results. Enquiry is being made into the causes of the failure of the operations in that district. To enable the Committee to further expand the scope of their operations and to meet additional expenditure in connection with the erection of new model nurseries in the centres of important silk districts, the annual grant of Rs. 3,000, hitherto made by Government, was raised to Rs. 6,000 for the year 1902-1903, with the prospect of its being continued at this increased rate for two years more.

The course of sericultural instruction imparted at the Rampur Boalia Industrial School was remodelled on a more popular basis, the main object of the school being the training of cocoon rearers' sons. In their case the course of training was reduced to six months, and no educational qualifications are required. The one-year rearers' class has been retained for educated students to be trained for the posts of sub-overseers and inspectors in the villages. To encourage the training of rearers' sons in the elementary course, the majority of the District Board scholarships are to be assigned to them.

6. The many heads of work indicated in the Director's Report sufficiently establish his claim for more expert assistance, and the Lieutenant-Governor expresses the hope that this may soon be sanctioned.

The Lieutenant-Governor thanks Mr. Lyon and Mr. Allen for their zeal in discharge of their duties, and also notices with pleasure the good work done by Mr. Nagendranath Banerji in the Sripur Farm.

By order of the Lieutenant-Governor of Bengal,

W. C. MACPHERSON,

Offg. Secretary to the Government of Bengal.

RESOLUTION REVIEWING THE COMMISSIONERS' REPORTS ON THE WORKING OF THE PURI LODGING-HOUSE ACT DURING THE YEAR 1901-1902.

MUNICIPAL DEPARTMENT—MUNICIPAL.

Darjeeling, the 5th September 1902.

RESOLUTION—No. 1671T.—M.

READ—

The reports from the Commissioners of Divisions on the working of the Puri Lodging-house Act, IV (B.C.) of 1871, as amended by Acts II (B.C.) of 1879 and I (B.C.) of 1884, during the year 1901-1902, in the various places to which it has been extended.

Read also—

The Resolution reviewing the Commissioners' reports on the working of the Act during the year 1900-1901.

During the year under review the Puri Lodging-house Act (Bengal Act IV of 1871, as amended by Bengal Acts II of 1879 and I of 1884) was extended to the village of Jessidih Bazar in the Deoghar subdivision of the district of the Sonthal Parganas.

2. The total number of lodging-houses was 1,912, providing accommodation for 68,500 lodgers, against 1,997 houses, accommodating 71,642 persons in the preceding year. In Gaya and Nadia (Nabadwipa) there was a rise both in the number of lodgers and lodging-houses, while elsewhere there was a steady decline. The decrease at Sitakund is ascribable partly to scarcity in the neighbouring districts, which chiefly send pilgrims to this shrine, and partly to the lateness of the season of Sivaratri *mêla*. The falling off in the Burdwan and Orissa Divisions was principally due to the opening of the Bengal-Nagpur Railway. Since the opening of the line, the pilgrim traffic is gradually concentrating on one main centre, and in a short time few lodging-houses will be left outside the town of Puri.

3. The health of the places where the Act was in force is reported to have been generally good. The number of deaths among pilgrims fell from 730 in the preceding year to 510, being 27 per cent. less than the proportionate decrease in the number of pilgrims. Plague was wholly absent from Gaya, but appeared in Deoghar without, however, causing any serious mortality.

4. There was no complaint in the past year in regard to the water-supply. The proposal of the Magistrate of Chittagong to bring down the water of the Mandakini spring by means of pipes to the Sitakund bazar, referred to in the last year's Resolution, was carried out with the help of a liberal donation of Rs. 5,000 given for the purpose by Raja Srinath Roy of Bhagyakul, in the Dacca district, and his brothers. At Garhbeta, in the district of Midnapore, the sinking of a well, which was sanctioned in 1899-1900, was completed last year, while two new wells were sunk at Puri. The special attention of the Commissioners of the Puri Municipality will be invited to the remarks of the District Magistrate that none of the money given by the Lodging-house Committee in previous years for the introduction of certain sanitary schemes has yet been expended on the assigned objects, and it is hoped that the Commissioners will not fail to realise their responsibilities and take early steps in the matter.

5. The total income of the year under review was Rs. 63,106—a slight increase on that of 1900-1901. The total expenditure was Rs. 57,415, against Rs. 43,186 in 1900-1901. The services of the Health Officer attached to the *chatties* in the Balasore district were dispensed with from 31st March 1902, his work being made over to the officers in charge of the several local dispensaries.

6. The Act has worked satisfactorily during the year in all places in which it was in force.

ORDER.—Ordered that a copy of the Resolution be submitted to the Government of India in the Home Department, and that copies be forwarded to the Commissioners of the Burdwan, Presidency, Chittagong, Patna, Bhagalpur, and Orissa Divisions for information.

Ordered also that a copy of the Resolution be communicated to the Sanitary Commissioner, Bengal, and to the Sanitary Board, and that it be published in the *Calcutta Gazette* for general information.

By order of the Lieutenant-Governor of Bengal,

E. W. COLLIN,

Offg. Secretary to the Govt. of Bengal.

Statement showing the working of the Puri Lodging-house Act during the year 1901-1902.

Serial number	Name of place where the Act is in force.	LICENSED LODGING-HOUSES		PROSECUTIONS						INCOME								
		Number.	Number of lodgers for whom accommodation provided.	Number of cases disposed of.	Number of persons arrested.	Number of persons convicted.	Number of persons acquitted	Amount of Fines— Imposed.	Realised.	Opening balance.	Fees for licensing and regulating lodging houses	Fees for issue of Health Officer's certificate	Other fees, if any.	Fines	Contribution from other funds.	Miscellaneous	Total, excluding opening balance	Total, including opening balance
1	2	3	4	5	6	7	8	9	10	11	12	13	14	15	16	17	18	19
								Rs. A	Rs A	Rs. A. P	Rs A	Rs. A.	Rs. A P	Rs A	Rs.	Rs A P	Rs. A. P	Rs A. P
1	Garbheta	12	164	12	12	12	.	27 0	27 0	313 15 6	82 0	12 0		27 0	.	265 5 0	386 5 0	705 4
2	Dantan ..	49	681	21	23	23	.	93 8	93 8	639 14 10	340 8	47 0		93 8	.	310 0 0	793 0 0	1,432 14
3	Midnapore	84	898	8	8	8	.	154 0	154 0	1,207 5 2	440 0	84 0		154 0	.	120 0 0	807 0 0	2,014 5
4	Ulubaria	21	196	4	5	3	2	28 0	28 0	100 0 0	186 0	12 0	5 0 0	24 0	..		241 0 0	341 0
5	Nadia	202	5,958	31	31	31		118 4	118 4	1,346 15 3	1,489 8	202 0		118 4			1,809 12 0	3,155 11
6	Sitakund	41	6,927		1	.				5,335 11 7	2,402 12		..		...	12 12 0	2,415 8 0	7,751 3
7	Gaya ..	577	27,775	115	115	106	9	1,529 0	1,529 0	10,271 0 0	28,059 0	146 0	...	1,529 0		...	29,734 0 0	40,005 0
8	Deoghar ..	71	3,703	17	17	17		254 0	254 0	375 14 6	965 12	100 0	...	254 0	.		1 290 12 0	1,675 10
9	Chatties on the Jagannath Road in Cuttack.	71	502	2	6	6	..	36 0	36 0	2,162 5 11	145 12	30 0	...	36 0	...	2,551 1 4	2,763 13 4	4,925 3
10	Chandbali ...	27	1,442	4	4	2	2	22 8	22 8	37 12 3	360 8	27 0	...	22 8	...	.....	410 0 0	447 12
11	Chattees on the Jagannath Road in Balasore.	93	1,863	31	31	31	..	127 8	127 8	1,460 11 1	504 4	100 0	...	127 8	...	1,878 11 10	2,610 7 10	4,071 2 11
12	Puri town and chatties in the district.	613	17,748	161	161	161	...	1,506 0	1,506 0	2,589 0 0	16,260 9	613 0	69 10 7	1,506 0	...	997 11 2	19,446 14 9	22,035 14
13	Chatties on the Jagannath Road in Jajpur	51	653	2	2	2	...	17 0	17 0	390 15 4	336 8	46 0	...	17 0	..	.... .	389 8 0	780 7
	Total .	1,913	68,500	408	416	402	13	3,912 12	3,912 12	26,235 9 5	51,552 1	1,431 0	74 10 7	3,913 12		6,135 9 4	63,106 0 11	89,341 10
	Total for 1900-1901 ..	1,997	71,042	419	430	418	12	6,110 10	6,064 10	43,773 2 5	49,519 14	1,934 8	92 6 2	6,068 2		4,046 15 9	62,561 13 11	1,06,335 0

Serial number.	Name of place where the Act is in force.	EXPENDITURE								Contribution to other funds.	Miscellaneous.	Closing balance.	Grand Total.
		Head Office Expenditure			Establishment for collection and supervision.	Dispensaries and other medical expenditure.	Conservancy.	Construction.	Repairs.				
		Health Officer's pay and allowance.	Establishment	Contingencies.									
		20	21	22	23	24	25	26	27	28	29	30	31
		Rs A P.	Rs. A P.	Rs A. P.	Rs. A P	Rs. A P.	Rs. A P.	Rs. A P.	Rs. A. P.	Rs. A. P.	Rs A P	Rs. A. P.	Rs. A
1	Garbheta	..	.. ...	..	. ..	95 5 6	116 9 9	125 0 0	..	120 0 0	66 13 7	181 6 8	705 4
2	Dantan	84 0 0	.		.. ...	445 8 3	161 1 5	. .	53 6 9		158 13 11	523 1 6	1,432 14
3	Midnapore	5*5 0 0	... ..		..		120 0 0	.		264 0 0	73 9 1	1,031 12 1	2,014 5
4	Ulubaria	22 0 0		... .	60 0 0	..	216 0 0	.	. . .		35 0 0	8 0 0	341 0
5	Nadi. .	180 0 0	...		....		624 0 0	35 0 0		620 0 0	118 12 1	1,677 15 2	3,155 11
6	Sitakund ...	29 10 10		46 9 0	..	54 8 0	1,290 0 4	11 8 0		1,536 12 5		4,782 3 0	7,751 3
7	Gaya ...	1,200 0 0	321 0 0	168 0 0	1,335 0 0	5,782 0 0	10,392 8 0	..	2,516 0 0	3,000 0 0	4,037 0 0	11 254 0 0	40,005 0
8	Deoghar ..	264 9 1	120 0 0		84 0 0			... ..		576 0 0	11 2 6	631 14 11	1,675 10
9	Chatties on the Jagannath Road in Cuttack.	480 0 0	253 5 4	55 10 0	244 12 9	188 2 8	456 0 0	...	135 15 1	210 0 0	152 12 9	4,758 5 8	4,925 3
10	Chandbali		152 8 6	20 2 3	5 0 0	.		. ...	..	..	7 3 0	262 14 6	447 12
11	Chattees on the Jagannath Road in Balasore	360 0 0	..	9 5 0	... ,	..	544 0 0		41 0 0	2,450 4 10	34 12 6	631 12 7	4,071 2 11
12	Puri town and chatties in the district.	2,878 14 10	981 2 7	150 14 3	.....	963 5 10	285 7 5	2,000 0 0	234 1 6	5,429 15 2	1,007 13 0	8,104 5 2	22,035 14
13	Chatties on the Jagannath Road in Jajpur ...	120 0 0	84 0 0	17 13 0	71 8 0	.	... ..	.. .	....	300 0 0	3 8 7	183 9 9	780 7
	Total ..	6,142 2 9	1,912 0 5	468 5 6	1,800 4 9	7,527 14 3	14,208 2 11	2,171 8 0	2,980 7 4	14,407 0 5	5,707 2 0	31,926 10 0	89,341 10
	Total for 1900-1901	6,055 13 5	2,183 4 0	730 6 3	1,906 2 9	8,140 3 5	13,001 7 6	2,510 2 1	3,673 0 6	30,557 1 4	2,289 0 7	26,288 4 6	1,06,335 0

RESOLUTION ON THE ANNUAL REPORT OF THE PORT OFFICER, CALCUTTA, FOR THE YEAR 1901-1902.

No. 1663Marine.

Government of Bengal,

MARINE DEPARTMENT.

Dated Calcutta, the 4th September 1902.

RESOLUTION.

READ—

Letter No. 2529, of 9th July 1902, from the Port Officer, Calcutta, submitting the Annual Report of his Department for the year 1901-1902.

THE year opened with 46 Pilots on the list; but as those in the Leadsman grade became qualified they were promoted, and at the end of the year the number stood at 49, or 3 short of the sanctioned number of 52. There were no casualties in the service during the year.

The number of vessels arriving at and leaving the port was 1,347 and 1,356, or a small decrease of 112 on the number of the previous year. The previous year's figures were exceptional, owing to the large number of transports for South Africa and China. The numbers given above represent a gross tonnage of 4,575,267 inwards and 4,618,217 outwards. The average tonnage of steamers and sailing ships, inwards and outwards, was 3,401 against 3,247 during the previous year.

The pilotage receipts during the year amounted to Rs. 11,30,390 against Rs. 11,60,603 during the previous year, or a decrease of a little over 2½ per cent. This is due to the smaller number of vessels that visited the port. Of the total number of vessels which visited the port, only 29 were sailing vessels.

Nine vessels were neaped for want of sufficient depth of water over the Royapore and Moyapore bars against five during the previous year. The average detention was 2·7 days. The number of vessels detained at the Sandheads for want of Pilots was 24, compared with 41 in the previous year. The shortest detention was 1 hour 15 minutes, the longest 40 hours 15 minutes, the average being 13 hours 14 minutes. These detentions were due to a number of vessels arriving at the same time.

There were only two collisions during the year, while the number of groundings was 24. In both cases of collisions the Pilots were to blame, while in the cases of groundings in three instances only were the Pilots to blame.

Thirty-five preliminary enquiries into casualties to vessels were held by the Port Officer, of which two were referred to Special Marine Courts. Two other Special Marine Courts were held to enquire into casualties to vessels while in charge of Assistant Harbour Masters. In five cases the Pilots were held to blame, and they were suitably dealt with.

One hundred and sixty-two candidates appeared for Colonial and Home Trade certificates of competency, of whom 85 passed. One hundred and fifty-four candidates also appeared for certificates of competency as masters, serangs, engineers and engine-drivers under Act VI of 1884. Of these, 52 passed.

Mr. G. Robertson, 1st Engineer and Shipwright-Surveyor, returned from furlough on 17th October 1901, relieving Mr. E. G. Venn, who reverted to the Royal Indian Marine. Mr. F. Olford, the Acting 2nd Engineer and Shipwright-Surveyor, was confirmed in that appointment. The gross receipts from surveys amounted to Rs. 40,877, while the expenditure, including the travelling allowances of surveyors to out-stations, was Rs. 25,912.

The work of the department was conducted by Commander E. J. Beaumont throughout the year, assisted by Lieutenant W. B. Huddleston as Assistant Port Officer. The latter officer went on 90 days' privilege leave from the 20th February 1902, when his place was taken by Lieutenant C. B. Henley, Royal Indian Marine.

By order of the Lieutenant-Governor of Bengal,

D. B. HORN,

Secretary to the Govt. of Bengal.

WEATHER AND CROP REPORT.

For the week ending the 8th September 1902.

Burdwan.—Rainfall at Sadar 0·79, Kalna 0 52, Katwa 1·37, Raniganj 6·13. Weather threatening. Transplantation still continues. Harvesting of *aus* going on. Fodder and water sufficient. Condition of cattle good. Common rice sells at 11 seers per rupee.

Birbhum.—Rainfall at Sadar 1·49, Rampur Hât 1·83. Transplantation is over. Paddy thriving. Weather seasonable. Common rice sells at 12 seers per rupee.

Bankura.—Rainfall at Sadar 2·80. Condition of standing paddy and sugarcane crops good. Fodder and water sufficient. Common rice sells at 12 seers per rupee.

Midnapore.—Rainfall at Sadar 2·52, Contai 2·22, Tamluk 1·74, Ghatal 2·68. Weather hot and cloudy. Harvesting of *aus* going on. Prospect of *aman* good. Fodder and water sufficient. Cattle-disease reported from Binpur thana. Common rice sells as follows:—

	Srs.	ch.	
Sadar	12	8	per rupee.
Contai	11	8	
Ghatal	11	8	
Tamluk	11	0	

Hooghly.—Rainfall at Sadar 2·50, Serampore 3·90, Arambagh 3 52. Weeding of *aman*, harvesting of *aus* and steeping of jute going on. Prospect of standing crops good. Weather seasonable. Fodder and water sufficient. Common rice sells as follows:—

	Srs.	ch.	
Sadar	10	0	per rupee
Serampore	10	4	
Arambagh	11	9	

Howrah.—Rainfall at Sadar 2·79, Ulubaria 2·12. Fall general. Cutting and thrashing of *aus* and reaping and steeping of jute still continue. Transplantation of *aman* paddy on high lands continues. Agricultural prospects hopeful. No cattle-disease reported. Fodder and water sufficient. Common rice sells at 11 seers per rupee on an average everywhere within the district.

24-Parganas.—Rainfall at Sadar 2·60, Barasat 4·76, Basirhat 1·03, Diamond Harbour 3·22. Weather hot and frequent showers. Good September weather. State of standing crops good. Prospect good. *Aus* and jute still being harvested, and the latter is being steeped. Transplantation of *aman* nearly finished. Common rice sells at 11 seers per rupee. Condition of cattle good. Supply of fodder and water sufficient.

Nadia.—Rainfall at Sadar 1·32, Ranaghat 1·57, Chuadanga 0·53, Meherpur 1·96, Kushtia 1·17. Harvesting of jute continues. *Aman* and sugarcane doing well. Lands being prepared for *rabi* crops. Fodder and water sufficient. No cattle-disease. Common rice sells as follows:—

	Srs.	ch.	
Sadar	12	0	per rupee.
Ranaghat	11	0	
Chuadanga	11	8	
Meherpur	13	5	
Kushtia	11	0	

Murshidabad.—Rainfall at Sadar 1·97, Kandi 1·74, Jangipur 1·88, Lalbagh 4 55. Weather seasonable. Harvesting of *bhadoi* not yet completed at Lalbagh and Jangipur Subdivisions. Prospects of *aman*, sugarcane, mulberry and jute good. Cow-pox reported from Burdwan thana. Fodder and water sufficient. Common rice sells as follows:—

	Srs.	ch.	
Sadar	11	8	per rupee.
Kandi	12	8	
Jangipur	12	0	
Lalbagh	11	0	

Jessore.—Rainfall at Sadar 1·52, Jhenida 2·00, Magura 0·94, Narail 0·77, Bangaon 1·27. Weather seasonable with occasional rain. Prospects of crops fair. Harvesting of *aus* paddy almost completed. More rain wanted. Fodder and water sufficient. Common rice sells at 12 seers per rupee.

Khulna.—Rainfall at Sadar 1·69, Bagerhat 2·04, Satkhira 2·70. Weather seasonable. Harvesting of *aus* and transplantation of *aman* still continues. Prospects favourable. Fodder and water sufficient. Cattle-disease reported from Paikgachha and Asasuni. Common rice sells as follows:—

	Srs.	ch.	
Sadar	11	4	per rupee
Bagerhat	12	0	
Satkhira	10	8	

Rajshahi.—Rainfall at Sadar 1·49, Nator 2·65, Naugaon 0·59. Weather seasonable. Harvesting of jute and *bhadoi* nearing completion. Transplantation of *aman* continues. Condition of cattle good. Common rice selling at 12 seers per rupee.

Dinajpur.—Rainfall at Sadar 1·06. Fall in the district scattered. Maximum fall 3·15. More rain wanted. Weather seasonable. Standing crops good. Transplanting of winter rice and steeping of jute continue. Cattle-disease reported at Kaliaganj. Fodder and water plentiful. Rice selling at 12 seers per rupee.

Jalpaiguri.—Rainfall at Sadar 4·91, Alipore Duars 1·82. Fall moderate. Weather cloudy. Transplantation of *haimanti* paddy almost finished. Harvesting of *bhadoi* paddy continues. Cutting of jute going on. Common rice sells at 11 seers a rupee. Fodder and water sufficient. No cattle-disease reported.

Darjeeling.—Rainfall at Sadar 6 55, Kurseong 4·78, Siliguri 3 01. Weather seasonable. *Hill*—*Bhadoi* and *haimanti dhan*, maize, *bara* and *chhota marua* doing well. *Terai*—Transplanting of *haimanti* paddy nearly finished. Reaping of jute and *bhadoi* paddy going on. Prospects good. Coarse rice sells as follows:—

	Srs.	ch.	
Hills	8	0	per rupee.
Terai	10	0	

Maize sells at Darjeeling at 20 seers and at Kalimpong at 40 seers per rupee.

Rangpur.—Rainfall at Sadar 2·76, Nilphamari 3·57, Kurigram 0·7, Gaibanda 0·18. Weather cloudy and rainy. Harvesting of *bhadoi* nearly finished. Transplantation of *aman*, and cutting and steeping of jute still going on. Water and fodder sufficient. Common rice sells as follows:—

	Srs.	ch.	
Sadar	10	8	per rupee.
Gaibanda	10	0	
Kurigram	12	0	
Nilphamari	10	8	

Bogra.—Rainfall at Sadar ·95. Fall general. Harvesting of *aus* and transplantation of *aman* nearly finished. Steeping of jute going on. Fodder and water sufficient. Prospects fair. Common rice sells at 12 seers per rupee.

Pabna.—Rainfall at Sadar 2·32. Fall general. Weather cloudy and rainy. Prospects of *aman*, sugarcane and tamarind fair. Fodder and water sufficient. Cattle-disease in Sadar. Common rice sells at 10 seers per rupee.

Dacca.—Rainfall at Sadar 4·29, Manikganj 3·80, Munshiganj 1·82, Narayanganj 1·94. Prospects of crops fair. Weather seasonable. Fodder available. No cattle-disease. Common rice sells at 11 seers per rupee.

Mymensingh.—Rainfall at Sadar 1·49, Jamalpur ·51, Kishorganj 1·40, Netrokona 2·60, Tangail 1·99. Weather hot and rainy. Harvesting of *aus* nearly over. Steeping of jute and transplantation of *aman* going on. *Aman* doing well. Fodder sufficient except at Netrokona. No cattle-disease. Common rice sells as follows:—

	Srs.	ch.	
Sadar	10	4	per rupee.
Kishorganj	10	12	
Jamalpur	11	6	
Netrokona	12	0	
Tangail	10	4	

Faridpur.—Rainfall at Sadar 3·23, Goalundo 1·92, Madaripur 1·93. Weather sultry and lately rainy. Prospects of crops good. Fodder and water sufficient. Common rice sells at 11 seers a rupee. No cattle-disease.

Backergunge.—Rainfall at Sadar 4·53. Fall general. Weather cloudy with occasional high wind. Prospects fair. Harvesting of *aus* and transplantation of *aman* continue. Cattle-disease at Matbari thana. Common rice sells at 13 seers (*aus*) and 11 seers (*aman*) per rupee. Fodder sufficient.

Tippera.—Rainfall at Sadar 2·75, Brahmanbaria 2·25, Chandpur 2·54. Weather seasonable Prospects of standing crops good. Harvesting of *aus* completed. Reaping of jute, transplantation of *aman* paddy still going on. Fodder and water sufficient. No cattle-disease. Common rice sells at 14 seers per rupee at Sadar.

Noakhali.—Rainfall at Sadar 5·11, Feni 1·85. Fall general. Weather rainy. Harvesting of *aus* nearly finished. Transplantation of *aman* continues. Prospects good. Outturn of cocoanut estimated at 75 per cent. Cattle-disease at Sudharam. Water sufficient. Fodder not so. Common rice sells at Sadar at 11 seers and at Feni at 13 seers per rupee.

Chittagong.—Rainfall at Sadar 3·86, Cox's Bazar 1·85. *Aus dhan* is being reaped and *aman dhan* is being transplanted. Water and fodder sufficient. Rice selling at 12 seers 11 chitaks per rupee.

Chittagong Hill Tracts.—Rainfall at Sadar 2·34. Fall general. Weather showery. Harvesting of *joom* paddy continues. Winter rice progressing satisfactorily. No cattle-disease. Rice selling at 12 seers per rupee.

Patna.—Rainfall at Sadar 4·88, Bihar 1·42, Dinapore 4·44, Hilsa 5·30, Bikram 1·71. Weather cloudy. Rain urgently needed for paddy. Paddy being used as fodder for cattle for want of rain. *Bhadoi* being reaped. No cattle-disease. Fodder and water sufficient. Common rice sells as follows :—

	Srs.	ch.	
Patna	11	8	per rupee.
Bihar	10	0	
Dinapore	12	0	

Gaya.—Rainfall at Sadar 3·57, Jahanabad 3·52, Aurangabad 3·04, Nawadah 2·15. Weather hot and rainy. Transplantation of paddy still continues. Want of sufficient rain is reported to be the cause of delayed transplanting. *Madua* harvested in places in Nawadah subdivision. No cattle-disease. Fodder and water ample. Average price of common rice is 11¼ seers per rupee.

Shahabad.—Rainfall at Sadar 2·10, Buxar 2·02, Bhabhua 4·20, Sasaram 1·94, Dehri 4·20. Weather hot and cloudy. The rain of the week has benefited the paddy crop which was suffering for want of rain. Harvesting of *bhadoi* continues.. No cattle-disease. Rice sells at Sadar at 11 seers a rupee.

Saran.—Rainfall at Sadar 1·69, Siwan 0·49, Gopalganj 1·00. Weather seasonable. Standing crops doing well, but more rain wanted for paddy. Fodder and water sufficient. Cattle-disease reported from three villages. Common rice sells at 12½ seers per rupee.

Champaran.—Rainfall at Sadar 1·25, Bettiah ·55. Weather hot and cloudy. Threshing of *bhadoi* paddy and harvesting of *makai* and *marua* going on. Transplantation of winter rice nearly finished. Prospects good. Cattle-disease reported. Fodder and water sufficient. Common rice sells at 14½ seers and maize at 22 seers per rupee.

Muzaffarpur.—Rainfall at Sadar 2·72, Hajipur 6·68, Sitamarhi ·65. Weather cloudy generally. Transplantation of paddy nearly completed. Harvesting of *bhadoi* crops going on. Prospects fair. Fodder and water sufficient. Prices are—Common rice 11½, maize 20½ seers a rupee.

Darbhanga.—Rainfall at Sadar 2·13, Samastipur 12·16, Madhubani 1·11. Transplantation of paddy is going on. Harvesting of *bhadoi* in progress. Sugarcane doing well. Fodder and water sufficient. Cattle-disease is reported from Warisnagar, Dalsingsarai, and Samastipur thanas. Common rice selling as follows : —

	Srs.	ch.	
Sadar	12	0	per rupee.
Samastipur	12	8	
Madhubani	11	11	

Monghyr.—Rainfall at Sadar 1·49, Begusarai ·14, Jamui 0·95. Weather hot and cloudy. Reaping of *bhodai* crops and harvesting of *makai* commenced in places. Paddy suffering, rain urgently needed. Cutting of *shama* and *kauni* continues. Sugarcane doing well. No cattle-disease. Ample fodder and water. Common rice sells as follows :—

	Srs.	ch.	
Sadar	11	6	per rupee.
Begusarai	12	0	
Jamui	11	0	

Bhagalpur.—Rainfall at Sadar 1·18, Banka 3·50, Madhipura 2·89, Supaul 0·78. Weather rainy and cloudy Harvesting of *marua* and *bhadoi* paddy going on. Transplantation of *aghani* paddy also going on. Rain favourable, More rain wanted in Banka. Sporadic cases of cattle-disease reported. Water and fodder sufficient. Common rice sells as follows : —

	Srs.	ch.	
Sadar	11	6	per rupee.
Banka	11	10	
Madhipura	14	8	
Supaul	14	0	

Purnea.—Rainfall at Sadar 1·25, Kishanganj 1·12, Araria 0 55. Fall general. jute and *bhadoi* are being harvested. Weather variable. No cattle-disease. Fodder and water sufficient. Common rice sells at Sadar and Kishanganj at 11 seers and at Araria at 16 seers per rupee.

Malda.—Rainfall at Sadar ·19, Chanchal ·84, Sibganj 1·39, Gajol ·78. Fall general. Weather hot. Harvesting of *bhadoi* finished except in parts of thana Gajol and Tulshihatta. Cutting of jute in progress. No cattle-disease. Fodder and water sufficient. Common rice sells at 12½ seers per rupee.

PRICES-CURRENT (retail) of Food-grains and Salt in the Head-

Number.	DISTRICTS.	QUANTITIES PER RUPEE IN											
		WHEAT.			BARLEY.			RICE, COMMON.			JOWAR OR CHOLUM (*Sorghum Vulgare*).		
		Present return.	Next preceding return.	Corresponding return of last year	Present return.	Next preceding return.	Corresponding return of last year.	Present return.	Next preceding return.	Corresponding return of last year.	Present return	Next preceding return.	Corresponding return of last year.
	BENGAL.	S. Ch	S Ch	S Ch	S. Ch.	S. Ch.	S. Ch.	S. Ch.	S. Ch.	S. Ch.	S. Ch.	S. Ch.	S. Ch.
BURDWAN DIVISION.	1 Burdwan ...	12 4	13 0	11 8	...	...	...	10 8	10 8	11 4	...	...	...
	2 Birbhum ...	12 12	12 0	12 0	...	...	...	11 4	12 0	11 4	...	..	...
	3 Bankura ...	12 8	12 0	11 0	...	...	...	11 10	12 0	11 4	..	..	...
	4 Midnapore ...	10 0	10 0	9 0	...	...	...	12 0	11 8	10 5	...	...	...
	5 Hooghly ...	10 0	10 0	10 0	...	...	...	9 4	9 4	9 4	...	...	...
	6 Howrah ...	...	...	...	...	...	...	11 0	11 0	9 8	...	...	...
PRESIDENCY DIVISION.	7 24-Parganas ..	...	...	...	...	...	...	10 0	10 4	10 0	...	...	...
	8 Calcutta ...	10 10	10 10	10 10	16 0	16 0	16 0	10 0	10 0	8 14	16 0	13 5	16 13
	9 Nadia ...	13 4	15 8	14 8	20 0	20 0	16 13	11 0	11 0	11 3	...	...	...
	10 Murshidabad ...	15 8	16 0	13 0	20 0	20 0	20 0	12 8	11 8	10 12	...	...	...
	11 Jessore ...	10 0	10 0	10 0	10 10	10 10	11 0	12 4	12 14	12 0	...	...	...
	12 Khulna ...	...	...	...	...	...	...	12 12	12 12	10 4	...	...	...
RAJSHAHI DIVISION.	13 Rajshahi ...	16 8	16 8	12 12	22 8	22 8	20 4	12 0	11 10	9 0 *Bhadoi* 12 0	...	...	.
	14 Dinajpur ...	14 6	15 0	12 0	...	...	...	13 3	12 9	10 0	...	...	...
	15 Jalpaiguri ...	11 0	11 0	10 0	...	...	...	11 0	11 0	10 8	...	...	...
	16 Darjeeling ...	...	...	...	...	...	...	9 8	9 8	9 0	..	...	...
	17 Rangpur ...	10 8	10 8	9 8	...	...	...	10 8	10 8	8 8	...	...	...
	18 Bogra ...	10 8	10 8	11 4	...	...	...	11 4	11 4	10 8	...	...	..
	19 Pabna ...	15 12	15 12	15 0	26 0	26 0	22 8	12 8	12 6	11 10	...	...	...
DACCA DIVISION.	20 Dacca ...	12 0	12 0	12 2	20 0	20 0	14 0	13 0	13 0	9 0	...	...	...
	21 Mymensingh ...	12 8	11 0	9 0	13 0	13 8	11 0	11 0	11 0	9 4	...	...	...
	22 Faridpur ...	16 0	16 8	13 0	20 0	20 0	20 0	11 4	12 0	11 7	...	...	...
	23 Backergunge ...	...	...	...	...	...	...	11 4 *Aus.* 13 8	10 8 *Aus.* 12 0	9 0 *Aus.* 12 0	...	...	..

A In the subdivisions the retail prices of salt per rupee are—Kalna 11 seers 3 chitaks, Katwa 11 seers 12 chitaks Ramganj 10½ seers.
B. At Rampur Hát the retail price of salt is 11½ seers per rupee.
C. At Vishnupur the retail price of salt is 9½ seers per rupee.
D. In the subdivisions the retail prices of salt per rupee are—Contai 10 seers; Tamluk 11 seers, Ghatal 11 seers 7 chitaks.
E. In the subdivisions the retail prices of salt per rupee are—Serampore 10½ seers; Arambagh 10 seers 10 chitaks
F At Ulubaria the retail price of salt is 10 seers 10½ chitaks per rupee.
G. In the markets in the interior of the district the retail prices of salt per rupee are—Chetla 10 seers 10 chitaks, Baraset 11 seers; Baduria 11 seers 12 chittaks, Moraghat 10 seers 10½ chitaks.
H. In the subdivisions the retail prices of salt per rupee are—Kushtia 10½ seers, Chuadanga 10 seers 12 chitaks (panga), Meherpur 10 seers (karkatoh), Ranaghat 11 seers 4 chitaks (crushed).
I. In the subdivisions the retail prices of salt per rupee are—Lalbagh 11 seers, Kandi 11 seers, Jangipur 11 seers.

Kangni or Kakun Italian millet. (*Setaria Italica.*)			Gram, Chana, Chhola, Kadalay, or Sunaga. (*Cicer arietinum.*)		
Present return.	Next preceding return.	Corresponding return of last year.	Present return.	Next preceding return.	Corresponding return of last year.
S. Ch.	S. Ch	S. Ch.	S. Ch.	S. Ch	S. Ch.
...	...	...	16 0	15 12	14
..	..	..	16 0	16 0	13 0
...	..	...	15 0	15 0	13 0
...	.	.	14 8	14 8	13 (
...	..	...	12 0	12 0	12 8
...	...	...	14 0	14 0	12 8
...	...	...	13 12	13 12	13 (
8 0	8 6	10 0	14 6	14 6	13 0
...	...	...	20 0	21 5	14 14
...	...	..	21 8	20 0	14 0
..	...	..	16 0	16 0	12 0
.	...	...	14 8	8 3	9 8
...	...	...	21 0	21 0	13 8
...	..	...	16 3	15 9	13 8
...	..	...	14 0	14 0	13 0
...	...	...	11 0	10 8	9 0
...	..	...	16 0	16 0	12 8
...	...	...	15 0	15 0	12 0
..	...	...	15 0	15 0	12 0
...	...	..	10 8	10 0	12 0
...	...	.	12 8	12 8	10 0
..	...	...	16 0	16 0	12 8
...	...	...	12 0	12 0	8

PRICES-CURRENT (retail) of Food-grains and Salt in the Head-quarters

QUANTITIES PER RUPEE IN

Number.	DISTRICTS.	WHEAT. Present return.	WHEAT. Next preceding return.	WHEAT. Corresponding return of last year.	BARLEY. Present return.	BARLEY. Next preceding return.	BARLEY. Corresponding return of last year.	RICE, COMMON. Present return.	RICE, COMMON. Next preceding return.	RICE, COMMON. Corresponding return of last year.	JOWAR OR CHOLUM (*Sorghum Vulgare*) Present return.	JOWAR OR CHOLUM (*Sorghum Vulgare*) Next preceding return.	JOWAR OR CHOLUM (*Sorghum Vulgare*) Corresponding return of last year.
BENGAL—*concluded.*		S. Ch.	S. Ch	S Ch.	S. Ch	S. Ch.	S. Ch	S. Ch.	S Ch	S. Ch.	S. Ch.	S. Ch.	S. Ch.
Chittagong Division. 24	Tippera ..	...	...	...	...	...	...	13 0	12 0	*Aman* 8 0 *Aus* 10 10½	...	...	...
25	Noakhali ...	...	...	...	...	...	...	11 0	11 0	9 8	...		...
26	Chittagong ...	...	...	...	.	...	...	12 11	12 14	11 8	..	...	...
BIHAR.													
Patna Division. 27	Patna ..	14 0	14 8	13 12	19 0	19 12	18 0	11 0	11 0	12 0	*White* 16 0 *Rabi* 20 0	*White* 16 0 *Rabi* 19 12	16 0
28	Gaya ...	13 0	13 4	13 0	17 0	17 0	16 12	11 0	10 12	11 0	15 0	15 0	17 0
29	Shahabad ..	13 0	13 0	12 0	20 0	18 0	16 0	11 8	11 0	10 4	...	...	..
30	Saran ...	15 0	14 4	12 0	20 0	19 0	18 8	12 0	11 8	10 0	...	...	...
31	Champaran ...	13 0	13 0	12 8	22 0 to 24 0	22 0 to 24 0	25 0	14 0	14 0	13 0	...	...	...
32	Muzaffarpur ...	14 0	14 0	12 0	19 0	19 0	22 0	11 8	11 8	11 0	...	...	...
33	Darbhanga ..	14 4	14 4	13 8	19 12	19 12	24 3	12 0	12 9	13 3	...	...	...
Bhagalpur Division. 34	Monghyr ...	14 8	14 8	14 2	25 0	21 0	18 14	10 8	10 0	12 9	...	...	...
35	Bhagalpur ...	13 14	13 14	13 0	19 0	19 0	20 0	12 6	12 16	11 6	...	...	...
36	Purnea ...	14 0	14 0	14 0	...	...	...	*Aghani* 10 8 *Bhadoi New.* 15 0	10 0	11 0	...	...	...
37	Malda ..	16 0	...	12 0	...	...	...	12 0	11 8	10 8	...	...	...
38	Sonthal Parganas.	11 8	11 8	10 0	15 0	15 0	15 0	12 0	12 0	13 8	...	...	...
ORISSA.													
Orissa Division. 39	Cuttack ...	11 13	11 13	11 2	...	...	...	13 2	13 2	12 12	...	...	...
40	Balasore ...	14 0	13 0	10 8	...	...	...	13 8 & 14 0	13 0	11 0	...	...	...
41	Angul ...	...	...	...	...	...	...	12 0	12 0	...	...	...	...
42	Puri ..	10 10	11 0	10 8	...	...	...	14 7	14 7	13 2	...	...	...
CHOTA NAGPUR.													
Chota Nagpur Division. 43	Hazaribagh ...	10 12	10 12	10 0	13 8	14 8	18 0	10 12	11 8	11 0	...	...	...
44	Ranchi ...	8 0 to 10 8	7 4 to 10 8	8 0 to 10 8	14 0	14 0	14 0	14 0	14 0	13 0	...	...	...
45	Palamau ..	10 15	10 11	10 2	14 1	13 8	12 15	10 6	10 2	9 0	...	...	...
46	Manbhum ...	12 0	12 8	16 0	16 0	16 0	16 0	13 4	13 0	11 0	...	...	16 0
47	Singhbhum ...	11 0	11 0	10 0	...	...	...	12 0	12 0	13 0	...	...	...

V. In the subdivisions the retail prices of salt per rupee are—Chandpur 9 seers ; Brahmanbaria 10 seers.
W. Eeni return not received
X. Return from Cox's Bazar not received.
Y. In the subdivisions the retail prices of salt per rupee are—Barh return not received ; Dinapore 10½ seers , Bihar 10 seers.
Z In the subdivisions the retail prices of salt per rupee are—Jahanabad 10 seers , Nawada 10 seers , Aurangabad 11 seers.
a. In the subdivisions the retail prices of salt per rupee are—Buxar 11 seers ; Bhabua 10½ seers , Sasaram 11 seers.
b. In the subdivisions the retail prices of salt per rupee are—Siwan 11 seers 6 chitaks , Gopalganj (Mirganj) 12 seers 2 chitaks.
c. At Bettiah the retail price of salt is 10½ seers per rupee.
d. In the subdivisions the retail prices of salt per rupee are—Hajipur return not received ; Sitamarhi 11 seers
e. In the subdivisions the retail prices of salt per rupee are—Samastipur 10 seers , Madhubani 10 seers 6 chitaks.
f In the subdivisions the retail prices of salt per rupee are—Begusarai 10½ seers , Jamui 10 seers 8 chitaks.

CALCUTTA
The 8th Septemb 902.

Station Bazars of the Districts of Bengal on the 31st August 1902—concld.

INDIAN-CORN OR MAIZE. (*Zea mays.*)			ARHAR OR TUR, CADJAN PEA. (*Cajanus Indicus.*)			SALT.			WHOLESALE PRICES PER MAUND OF 40 SEERS. SALT.			DISTRICTS.		
Present return.	Next preceding return.	Corresponding return of last year.	Present return.	Next preceding return.	Corresponding return of last year.	Present return.	Next preceding return.	Corresponding return of last year.	Present return.	Next preceding return.	Corresponding return of last year.		Number.	
S. Ch.	S. Ch.	S. Ch.	S. Ch.	S. Ch.	S. Ch.	S. Ch.	S. Ch.	S. Ch.	R. A. P.	Rs. A. P.	Rs. A. P.	BENGAL—*continued*		
...	...	...	...	...	...	10 [v] 0	9 0	9 0	3 14 0	3 12 0	4 8 0	Tippera.	24	Chittagong Division.
...	...	...	...	...	...	9 [w] 0	8 8	9 0 Panga.	3 2 0	4 4 0	4 8 0	Noakhali.	25	
...	...	...	8 0	8 0	8 10	10 [x] 0	20 0	9 8 Panga.	3 6 0	3 6 0	3 14 0	Chittagong.	26	
												BIHAR.		
21 0	21 0	16 8	17 0	18 0	16 0	10 [y] 4	10 12	10 8 Panga.	3 11 0	3 10 0	3 12 0	Patna.	27	Patna Division.
18 0	18 0	15 4	15 12	15 0	13 8	11 [z] 0	11 4	10 8	3 9 6	3 9 0	3 15 0	Gaya	28	
...	...	...	12 0	14 0	11 0	10 [a] 0	10 0	10 8	4 0 0	4 0 0	3 13 0	Shahabad.	29	
20 0	20 0	15 0	15 8	14 0	12 0	11 [b] 0	11 0	10 8	3 10 2	3 10 2	3 13 0	Saran.	30	
22 0	22 0	19 8	22 0	22 0	19 0	10 [c] 8	10 8	10 0	3 13 0	3 13 0	4 0 0	Champaran.	31	
20 0	20 0	18 0	13 8	14 0	13 0	10 [d] 0	10 0	9 12 Panga.	4 0 0	4 0 0	4 0 0	Muzaffarpur	32	
22 0	22 0	22 0	14 4	14 4	13 3	11 [e] 0	11 0	11 0	3 10 6	3 10 0	3 10 0	Darbhanga	33	
29 0	20 0	18 14	11 0	11 0	17 15	10 [f] 8	10 8	10 8	3 14 6	3 14 6	3 6 6	Monghyr	34	Bhagalpur Division.
21 8	19 0	18 4	12 10	12 10	10 8	10 [g] 12	10 12	10 4 Panga.	3 8 10 0	3 10 0	3 14 0	Bhagalpur.	35	
...	...	...	10 0	10 0	8 0	9 [h] 8	10 0	10 0 Panga.	4 0 0	4 0 0	4 0 0	Purnea.	36	
...	...	...	13 0	13 0	10 0	10 [i] 0	10 0	9 8 Panga.	3 14 0	3 11 0	4 0 0	Malda.	37	
						9 8	9 8	9 8 Karkatch.	4 0 0	4 0 0	4 0 0			
...	...	15 0	18 0	19 0	12 4	10 [j] 8	10 8	10 0	3 10 0	3 10 0	3 12 0	Santhal Parganas.	38	
												ORISSA.		
...	...	...	15 1	14 12	12 7	12 [k] 0	11 0	13 0	3 0 0	3 0 0	3 0 0	Cuttack	39	Orissa Division.
...	...	...	10 12	10 0	10 0	11 [l] 0	11 4	10 8	3 3 0	3 7 0	3 12 0	Balasore.	40	
...	...	...	15 0	14 8	...	8 [m] 0	8 0	...	...	...	...	Angul.	41	
...	...	...	9 3	9 3	7 4	13 [n] 0	13 0	13 4	3 1 0	3 2 0	2 14 6	Puri	42	
												CHOTA NAGPUR		
14 8	14 [o] 8	14 0	9 8	9 8	9 8	8 8	8 8	8 8 Panga.	4 7 0	4 7 0	4 12 0	Hazaribagh.	43	Chota Nagpur Division.
17 0	...	13 8	6 0 to 6 8	5 8 to 6 8	6 8 to 7 0	9 12	9 12	9 0 Panga.	4 1 0	4 2 0	4 6 0	Ranchi.	44	
13 8	12 15	10 11	11 4	11 4	8 4	10 2	9 9	8 11	...	...	...	Palamau.	45	
...	...	...	11 8	12 0	10 0	10 [o] 10	10 12	10 0 Panga.	3 8 10 0	3 9 0	4 0 0	Manbhum.	46	
...	...	...	10 0	10 0	8 0	9 0	9 0	9 0	4 4 0	4 4 0	3 8 0	Singbhum.	47	

g. In the subdivisions the retail prices of salt per rupee are—Banka 10 seers; Madhipura 10 seers*; Supaul 10 seers.
h. In the subdivisions the retail prices of salt per rupee are—Kishanganj 9 seers; Arraria 9 seers.
i. At Balia Nawabganj the retail price of salt is 10 seers per rupee.
j. In the subdivisions the retail prices of salt per rupee are—Deoghur 10 seers (panga); Godda 10 seers; Jamtara 11 seers; Pakaur 11 seers (karkatch); Rajmahal 11 seers.
k. In the subdivisions the retail prices of salt per rupee are—Jajpur 10 seers 10 chittacks (panga); Kendrapara 10 seers (panga).
l. At Bhadrak the retail price of salt is 10½ seers per rupee.
m. In the marts in the interior of the district the retail prices of salt per rupee are—Sankhpur 9 seers; Rampara 9 seers.
n. At Khurda the retail price of salt is 13 seers per rupee.
o. At Gobindpur the retail price of salt is 10 seers 10 chitaks per rupee.

Published for general information.

W. C. MACPHERSON,

Offg. Secretary to the Govt. of Bengal.

PRICES-CURRENT (wholesale) of Food-grains, Firewood, &c.,

Number.	Marts.	Rice (best sort).			Common rice (*mota chaul*).			Wheat (*Triticum sativum*).			Barley (*Hordeum vulgare*).		
		Present return.	Next preceding return.	Corresponding return of last year.	Present return.	Next preceding return.	Corresponding return of last year.	Present return.	Next preceding return.	Corresponding return of last year.	Present return.	Next preceding return.	Corresponding return of last year.
1	2	3	4	5	6	7	8	9	10	11	12	13	14
		Rs. A. P.	Rs. A. P.	Rs. A. P.	Rs. A. P.	Rs. A. P.	Rs. A. P.	Rs. A. P.	Rs. A. P.	Rs. A. P.	Rs. A. P.	Rs. A. P.	Rs. A. P.
1	Calcutta ...	5 4 0	5 4 0	5 4 0	3 12 0	3 12 0	4 4 0	3 8 0	3 8 0	3 8 0	2 6 0	2 6 0	2 6 0
2	Burdwan ...	5 0 0	5 0 0	4 12 0	3 11 0	3 11 6	3 8 0	...	...	...	...	...	...
3	Midnapore ...	4 0 0	4 0 0	4 4 0	3 3 0	3 8 0	3 10 0	...	...	...	...	...	...
4	Pabna ...	6 10 0	6 10 0	6 6 6	3 5 0	3 8 6	3 6 6	2 8 6	2 8 6	2 10 6	...	...	...
5	Rangpur ...	5 0 0	5 0 0	6 8 0	3 12 0	3 12 0	4 0 0	3 12 0	3 12 0	3 12 0	...	...	...
6	Dacca ...	4 0 0	4 2 0	4 13 0	3 4 0	3 4 0	4 8 0	3 4 0	3 4 0	3 3 0	2 0 0	2 0 0	2 12 0
7	Chittagong ...	...	...	...	3 6 0	3 4 0	3 10 0	...	...	...	...	...	...
8	Patna ...	3 12 0	3 12 6	4 2 6	3 10 0	3 10 0	3 5 6	2 13 6	2 12 3	3 0 0	2 1 0	2 0 0	2 3 0
9	Muzaffarpur ...	5 0 0	5 0 0	4 7 0	3 5 3	3 5 3	3 5 3	2 12 0	2 12 0	3 3 0	2 0 0	2 0 0	1 12 6
10	Bhagalpur ...	4 3 0	4 3 0	4 15 0	3 3 0	3 3 0	3 3 6	2 14 0	2 14 0	3 1 3	2 0 6	2 0 6	2 0 0
11	Cuttack ...	4 4 0	4 4 0	3 14 0	2 13 0	2 13 0	2 14 6	3 3 0	3 3 0	3 6 0	...	...	...
12	Ranchi ...	4 10 9	4 10 9	4 3 0	2 13 6	2 13 6	3 1 0	4 3 0 to 5 0 0	3 13 0 to 5 3 0	3 13 0 to 5 0 0	2 13 6	2 13 6	2 13 9

Calcutta,

The 8th September 1902.

JUAR OR CHOLUM (*Sorghum vulgare*).			BAJRA OR CUMBU (*Pennisetum typhoideum*)			MARUA OR RAGI (*Eleusine coracana*).			GRAM, CHANA, CHOLA, KADALAY, OR SUNAGA (*Cicer arietinum*)		
Present return.	Next preceding return.	Corresponding return of last year	Present return.	Next preceding return.	Corresponding return of last year	Present return.	Next preceding return.	Corresponding return of last year	Present return.	Next preceding return.	Corresponding return of last year.
15	16	17	18	19	20	21	22	23	24	25	26
Rs A. P.	Rs A. P.	Rs A P.	Rs. A. P.	Rs. A. P	Rs A. P.	Rs. A. P.	Rs. A. P.	Rs. A. P.	Rs. A. P.	Rs. A. P.	Rs A. P
2 6 0	2 12 0	2 4 0	2 8 0	2 8 0	3 8 0	...	...	...	2 8 0	2 8 0	2 12 0
...	...	...	...	...	...	...	...	...	2 6 0	2 7 0	2 12 0
...	...	...	...	...	...	...	...	...	2 8 0	2 10 0	3 0 0
...	...	...	...	...	...	...	...	...	2 10 6	2 10 6	3 5 0
...	...	...	...	...	...	...	...	.	2 8 0	2 8 0	3 2 0
...	...	...	...	...	...	...	...	...	4 0 0	4 0 0	3 4 0
...	...	...	...	...	...	...	...	...	3 6 0	3 4 0	3 12 0
White. 2 7 0	...	2 7 0	...	...	...	...	...	...	2 1 6	2 0 6	2 10 0
Raksa. 1 15 0	2 0 0										
..	..	...	...	...	...	1 13 0	1 13 0	2 5 6	2 0 0	2 0 0	2 1 6
...	...	...	...	...	...	...	...	...	2 4 0	2 4 0	2 10 0
...	...	...	...	...	...	...	...	...	2 6 3	2 7 0 Biri or kalai.	2 13 0
...	...	...	...	...	...	...	...	...	3 3 2	3 1 0	3 5 3

1276a

Indian-corn or maize (*Zea mays*).			Arhar dal or Thur—Cadjan pea (*Cajanus indicus*).			Linseed.			Mustard and Rapeseed		
Present return.	Next preceding return.	Corresponding return of last year.	Present return.	Next preceding return.	Corresponding return of last year.	Present return.	Next preceding return.	Corresponding return of last year.	Present return	Next preceding return.	Corresponding return of last year.
27	28	29	30	31	32	33	34	35	36	37	38
Rs. A. P.	Rs. A. P.	Rs. A. P.	Rs. A. P.	Rs. A. P.	Rs A. P.	Rs. A. P.	Rs. A. P.	Rs A. P	Rs. A. P.	Rs. A. P	Rs. A. P
2 2 0	2 4 0	2 12 0	4 4 0	4 0 0	4 0 0	6 12 0	6 12 0	7 4 0	5 0 0	4 12 0	4 12 0
...	...	...	3 3 0	3 3 0	3 12 0	...	...	...	4 6 0	4 12 0	5 0 0
									Black mustard.		
...	...	...	4 0 0	3 14 0	4 12 0	6 8 0	6 8 0	5 8 0	4 10 0 to 4 12 0	4 10 0 to 4 12 0	4 0 0 to 4 12 0
									Rapeseed.		
									4 14 0	4 14 0	4 4 0
...	...	...	4 5 0	4 5 0	5 5 0	4 8 0	4 8 0	6 0 0	6 4 0	6 4 0	5 9 0
3 2 0	3 2 0	3 4 0	4 0 0	4 0 0	5 4 0	...	...	...	4 8 0	4 8 0	5 4 0
...	...	..	4 0 0	4 0 0	4 0 0	...	...	...	...	...	...
...	...	...	4 12 0	4 8 0	5 4 0	...	...	...	4 8 0	4 8 0	5 6 0
1 14 0	1 14 0	2 6 6	2 5 0	2 3 0	2 8 0	6 0 0	5 12 0	5 10 0	4 6 0	4 3 0	5 0 0
1 15 3	1 15 8	2 1 6	2 13 9	2 10 6	2 15 3	...	..	...	...	..	...
									Rapeseed.		
1 14 6	2 0 6	2 3 0	3 2 0	3 2 0	3 12 0	6 0 0	6 0 0	...	4 6 0	4 6 0	6 2 0
									Mustard		
									4 0 0	4 0 0	
...	...	...	2 7 0	2 10 0	3 0 0	...	...	...	4 4 9	4 4 9	4 1 8
...	...	...	6 2 6 to 6 10 0	6 2 6 to 7 4 4	5 11 6 to 6 2 6	6 10 0	6 10 0	5 0 0	5 0 0	5 0 0	5 2 6

Til or jinjili seed.			Sugar (raw).			Cotton, cleaned.			Jute		
Present return.	Next preceding return.	Corresponding return of last year.	Present return.	Next preceding return.	Corresponding return of last year.	Present return.	Next preceding return.	Corresponding return of last year.	Present return.	Next preceding return.	Corresponding return of last year.
39	40	41	42	43	44	45	46	47	48	49	50
Rs. A. P.	Rs. A. P.	Rs. A. P.	Rs. A. P.	Rs. A. P.	Rs. A. P.	Rs. A. P.	Rs. A. P.	Rs. A. P.	Rs. A. P.	Rs. A. P.	Rs. A. P.
4 12 0	4 8 0	5 0 0	4 4 0	4 4 0	4 0 0	15 0 0	15 0 0	17 0 0	5 4 0	5 4 0	5 4 0
...	...	...	4 0 0	3 12 0	4 4 0	20 0 0	20 0 0	17 12 0	...	...	...
...	...	...	3 4 0 to 3 8 0	3 4 0 to 3 8 0	3 8 0 to 4 0 0	20 0 0	20 0 0	20 0 0	...	...	...
...	...	...	3 10 0	3 8 0	4 8 0	21 0 0	21 0 0	20 0 0	5 2 0	4 14 0	5 0 0
...	...	...	4 0 0	4 0 0	6 4 0	...	...	...	4 0 0	4 0 0	4 12 0
...	...	...	4 2 0	4 0 0	5 12 0	...	...	...	4 8 0	4 8 0	5 0 0
...	...	...	5 0 0	4 12 0	5 8 0	14 8 0	14 8 0	14 0 0	...	...	...
5 10 0	5 12 0	5 0 0	2 12 0	2 8 0	3 8 0	15 0 0	15 0 0	16 0 0	4 4 0	4 6 0	3 0 0
...	...	...	2 10 6	2 5 6	3 1 3	...	...	...	...	...	...
...	...	...	4 1 0	4 1 0	5 5 0	19 0 0	19 0 0	18 0 0	...	...	...
4 1 0	4 1 0	4 6 0	4 8 0	4 8 0	4 8 0	20 0 0	20 0 0	22 0 0	...	...	...
...	...	...	4 0 0	3 10 0 to 4 0 0	4 3 0 to 5 0 0	20 0 0	20 0 0	22 12 0	...	...	...

Ghi (clarified butter).			Tobacco leaf.			Hides (cow).			Grass.		
Present return.	Next preceding return.	Corresponding return of last year.	Present return.	Next preceding return.	Corresponding return of last year.	Present return.	Next preceding return.	Corresponding return of last year.	Present return.	Next preceding return.	Corresponding return of last year.
51	52	53	54	55	56	57	58	59	60	61	62
Rs. A. P.	Rs. A. P.	Rs. A. P.	Rs. A. P.	Rs. A. P.	Rs. A. P.	Rs. A. P.	Rs. A. P.	Rs. A. P.	Rs. A. P.	Rs. A. P.	Rs. A. P.
						Per 100 pieces.					
39 0 0	39 0 0	40 0 0	7 0 0	9 0 0	9 0 0	250 0 0	250 0 0	300 0 0	1 0 0	1 0 0	0 13 9
30 0 0	30 0 0	41 0 0	...	...	...	...	...	...	...	...	...
				Madhukhali.			Uncleaned hide per piece.				
30 8 0	30 8 0	41 8 0	5 8 0 to 6 10 0	5 8 0 to 6 8 0	5 8 0 to 7 8 0	1 0 0 to 2 8 0	1 0 0 to 2 8 0	1 0 0 to 2 2 0	...	...	...
				Pulta.			Cleaned hide per piece.				
						1 4 0 to 2 12 0	1 4 0 to 2 12 0	1 2 0 to 2 4 0			
53 0 0	53 0 0	53 0 0	6 8 0	6 8 0	7 0 0	...	...	...	...	...	...
36 0 0	36 0 0	42 0 0	10 0 0	10 0 0	9 0 0	...	...	...	0 2 6	0 2 6	0 2 6
						Per maund.					
40 0 0	40 0 0	45 0 0	7 8 0	7 8 0	9 0 0	25 0 0	25 0 0	25 0 0	0 3 0	0 3 0	0 3 0
						Per maund.					
32 8 0	33 0 0	44 0 0	7 8 0	10 0 0	10 0 0	16 8 0	16 8 0	18 8 0	...	...	...
30 0 0	30 0 0	35 0 0	4 0 0	3 8 0	3 0 0	...	...	...	0 4 0	0 4 0	0 4 0
29 1 6	29 1 6	34 9 6	8 0 0	8 0 0	8 0 0	...	...	...	...	...	...
32 0 0	32 0 0	40 0 0	8 0 0	8 0 0	...	...	...	...	...	...	...
						Per maund.					
34 8 0	33 12 0	37 8 0	4 4 0	4 4 0	4 4 0	25 0 0	25 0 0	25 0 0	0 7 0	0 7 0	0 8 6
						Per piece.					
30 7 6 to 36 0 0	32 0 0 to 37 8 10	36 0 0 to 40 0 0	6 10 0 to 13 5 3	6 10 0 to 13 5 3	6 10 6 to 13 0 0	1 0 0 to 1 8 0	1 0 0 to 2 0 0	1 0 0	0 3 3	0 4 0	0 2 8

in the undermentioned Marts of Bengal on the 31st August 1902.

Straw.			Juar stalks.			Prices per maund of 40 standard seers.									Marts.
						Iron.			Firewood.			Salt.			
Present return.	Next preceding return.	Corresponding return of last year.	Present return.	Next preceding return.	Corresponding return of last year.	Present return.	Next preceding return.	Corresponding return of last year.	Present return.	Next preceding return.	Corresponding return of last year.	Present return.	Next preceding return	Corresponding return of last year.	
63	64	65	66	67	68	69	70	71	72	73	74	75	76	77	78
Rs. A. P.	Rs. A. P.	Rs. A. P.	Rs. A. P.	Rs. A. P.	Rs. A. P.	Rs. A P	Rs. A. P	Rs. A. P.	Rs. A. P.	Rs. A. P.	Rs. A. P.	Rs. A P.	Rs. A. P	Rs. A. P.	
0 12 0	0 12 0	0 14 0	...	...	...	5 12 0	5 12 0	5 4 0	0 8 0	0 8 0	0 8 0	3 6 0	Panga. 3 6 0	3 8 0	1. Calcutta.
0 12 0	0 12 0	0 14 0	...	...	...	...	...	...	0 8 0	0 8 0	0 5 6	3 4 0	3 4 0	3 10 0	2. Burdwan.
0 4 8	0 4 8	0 10 1	...	...	...	3 12 0 to 4 4 0	3 12 0 to 4 4 0	4 0 0 to 5 0 0	0 4 0	0 4 0	0 4 0	3 8 0	3 8 0	3 11 0	3. Midnapore
1 0 0	1 0 0	1 0 0	...	...	...	7 0 0	7 0 0	7 0 0	0 10 0	0 10 0	0 5 0	3 12 0	Panga. 3 12 0	3 13 6	4. Pabna.
0 7 0	0 7 0	0 7 0	...	...	...	7 0 0	7 0 0	7 0 0	0 5 0	0 5 0	0 5 0	3 12 0	Panga. 3 12 0	4 0 0	5. Rangpur.
...	...	...	...	...	...	5 0 0	5 0 0	6 0 0	0 5 3	0 5 3	0 5 3	3 10 0	Panga. 3 10 0	4 0 0	6. Dacca.
...	...	...	...	...	...	4 12 0	4 8 0	5 4 0	...	...	..	3 6 0	3 6 0	3 14 0	7. Chittagong.
...	...	...	...	...	...	5 0 0	4 0 0	5 0 0	0 7 0	0 7 0	0 6 0	3 11 0	3 10 0	3 12 0	8. Patna.
...	...	...	...	...	...	5 11 6	5 11 6	5 11 6	0 4 0	0 4 0	0 4 0	4 0 0	Panga. 4 0 0	4 0 0	9. Muzaffarpur.
...	...	...	...	...	...	5 0 0	5 0 0	5 0 0	0 5 9	0 5 9	0 6 3	3 10 0	Panga. 3 10 0	3 14 0	10. Bhagalpur.
0 7 0	0 7 0	0 8 0	...	...	...	4 11 0	4 11 0	4 4 0	0 4 0	0 4 0	0 4 0	3 0 0	Karkatoh. 3 0 0	3 0 0	11. Cuttack.
0 9 0	0 6 0 to 0 10 0	0 6 0 to 0 10 0	...	...	...	5 10 0	5 10 0	5 11 6	0 4 0	0 4 0	0 4 0	4 1 0	Panga. 4 2 0	4 6 0	12. Ranchi.

W. C. MACPHERSON,
Offg. Secretary to the Govt. of Bengal.

IRRIGATION DEPARTMENT, BENGAL.

Abstract statement showing assessed Tollage or Earnings on Canals in Bengal classed as Major Works for the month of July 1902, as compared with that of the corresponding month of the previous year.

Canals	Tollage, 1902-1903				Tollage, 1901-1902			
	During the month		To end of the month.		During the month.		To end of the month.	
1	2		3		4		5	
Orissa Circle.	Rs. A. P.		Rs. A. P.		Rs. A. P.		Rs. A. P.	
Taldanda Canal System	1,173 3 6		5,267 3 6		1,063 0 5		3,811 6 11	
Kendrapara ditto	2,530 5 5		10,851 14 7		4,343 10 4		18,819 3 5	
High Level, Range I	597 2 9		2,438 14 6		1,204 8 0		2,880 13 0	
Ditto, „ II	147 4 3		512 12 6		186 1 3		556 4 3	
Ditto, „ III	16 0 3		43 13 0		33 4 0		95 12 3	
Jajpur Canal ...	96 3 0		188 14 6		35 0 0		103 2 9	
Total Orissa Circle ...	4,560 3 2		19,303 8 7		6,865 8 0		26,266 10 7	
South-Western Circle.								
Midnapore Canal	4,785 11 6		30,762 9 0		7,504 1 0		34,152 5 9	
Hijili Tidal Canal	3,263 15 0		17,221 13 3		4,038 7 6		20,828 4 0	
Total South-Western Circle ..	8,049 10 6		47,984 6 3		11,542 8 6		54,980 9 9	
Sone Circle								
Patna Canal System .	859 6 1		2,772 1 7		995 13 0		6,653 13 6	
Arrah ditto ...	334 14 6		2,967 15 9		406 3 0		4,146 2 0	
Buxar ditto ..	149 2 9		1,162 4 3		347 14 6		1,421 8 0	
Total Sone Circle ...	1,343 7 4		6,902 5 7		1,749 14 6		12,221 7 6	
Grand Total ...	13,953 5 0		74,190 4 5		20,157 15 0		93,468 11 10	

IRRIGATION DEPARTMENT, BENGAL.

Abstract Statement showing assessed Tollage or Earnings on Canals in Bengal classed as Minor Works and Navigation for the month of July 1902, as compared with that of the corresponding month of the previous year

Canals	Tollage, 1902 1903.				Tollage, 1901-1902			
	During the month		To end of the month		During the month.		To end of the month	
1	2		3		4		5	
	Rs. A. P.		Rs. A. P.		Rs. A. P.		Rs. A. P.	
Calcutta and Eastern Canals	15,706 12 0		64,294 14 9		14,454 3 6		57,002 13 0	
Tolly's Nala .	4,149 12 9		16,621 9 6		4,553 9 3		16,978 10 6	
Total ..	19,856 8 9		80,916 8 3		19,007 12 9		73,981 7 6	
Orissa Coast Canal ...	1,833 12 0		9,172 8 9		3,157 5 3		16,022 12 6	
Nadia Rivers ...	8,489 7 9		21,142 15 9		10,176 7 6		18,800 13 0	
Grand Total ...	30,179 12 6		1,11,232 0 9		32,341 9 6		1,08,805 1 0	

Darjeeling,
The 5th September 1902.

R. C. Edgr,
Under-Secy. to the Govt. of Bengal.

GOVERNMENT OF BENGAL, IRRIGATION DEPARTMENT.

Approximate return of traffic on the Circular and Eastern Canals for the week ending Saturday, the 6th September 1902, as compared with the corresponding week of the previous year.

Nature of Cargo.	Week ending Saturday, the 6th September 1902.			Week ending Saturday, the 7th September 1901.		
	Number of boats.	Weight of cargo.	Tollage.	Number of boats.	Weight of cargo.	Tollage.
		Mds.	Rs		Mds	Rs.
Rice and paddy	519	49,925	586	329	35,425	415
Jute	178	31,575*	468	81	24,425†	355
Firewood	66	35,275	551	43	14,650	221
Other articles	646	1,37,695	1,649	340	82,472	967
Total ...	1,409	2,54,470	3,254	793	1,56,972	1,958

* Weight by canal measurement, 31,337½ maunds.
† Ditto ditto, 24,000 „

Abstract of the Results of Meteorological Observations taken at the Alipore Observatory in the month of August 1902.

	Inches.	Date.	Hour.
The mean pressure of the month	29·615		
The average pressure of August from 24 years' registers ...	29·598		
The highest pressure in the month	29·751	21st	10
The lowest pressure in the month	29·391	24th	16
The range of pressure	0·360		
	Hours.		
The total number of hours of bright sunshine during the month	140 9		
The maximum possible number of hours of sunshine ...	398·4		
	⊖		
The mean temperature of the month	84·0		
The average temperature of August from 24 years' registers ...	83·1		
The highest temperature in the month	94·2	13th	
The lowest temperature in the month	74·7	11th	
The range of temperature during the month	19·5		
The mean daily range of temperature	11·2		
The greatest range of temperature in one day	15·4	13th	
	Per cent.		
The mean humidity of the month	86		
The average humidity of August from 24 years' registers ...	86		
	Inches.		
The mean vapour tension of the month	1·002		
The average vapour tension of August from 9 years' registers ...	1·002		
The mean cloud proportion of the month	8·13		
The average cloud proportion of August from 25 years' registers	8·00		
	Inches.		
The total rainfall of the month	14·01		
The total rainfall indicated by a Beckley's self-registering rain-gauge (mouth of the gauge about 52 feet above the ground)	12·92		
The average fall of August from 48 years' registers ...	13·94		
The greatest fall in 24 hours	2·71	11th	
	Days.		
The number of rainy days in the month	16		
The average number of rainy days in August from 24 years' registers (Alipore Observatories)	19		
	⊖		
The mean maximum equilibrium temperature of solar radiation during the month	145·7		
The mean difference of sun and air temperatures	55·8		
The greatest sun temperature	156·9	17th	
The greatest excess of sun over air temperature	66·2	4th	
The mean temperature of the nocturnal radiation thermometer on woollen cloth	77·1		
The mean depression of the nocturnal radiation thermometer below the minimum air temperature at 4 feet above the ground	1·3		
The greatest depression of the nocturnal radiation thermometer below the minimum air temperature	3·0	23rd	
	Miles.		
The mean movement of the wind per day	88·3		
The greatest movement of the wind in one day	233·0	10th	
The greatest movement of the wind in one hour	17·0	24th	10 to 11 a.m.

The number of hours with winds from each of the eight points—
N. 24, N.E. 23, E. 62, S.E. 160, S. 184, S.W. 135, W. 53, N.W. 20, Calm 83.

The results of observations at the Alipore Observatory are not rigorously comparable with the registers of past years (at the Park Street Observatory). The barometer is about 3 feet higher at Alipore, and, other things being equal, reads therefore ·003 lower. The diurnal range of temperature is also greater at Alipore, and the mean temperature apparently about 0·6 higher; and, finally, the thermometer which furnished the record of temperature at the Surveyor-General's Office during 20 years and upwards is found to read 0·6 higher than the Kew Standard thermometer, which is the standard of reference at the present Observatory.

G. W. KÜCHLER,

for *Meteorological Reporter to the Govt. of India and Director-General of Indian Observatories.*

METEOROLOGICAL OFFICE, GOVT. OF INDIA,
Alipore (Calcutta), the 8th September 1902.

Results of the Meteorological Observations taken at the Alipore Observatory from 31st August to 6th September 1902.

Month.	Date.	Maximum in sun.	Number of hours of bright sunshine.	Mean pressure barometer at 32° Fahr.	Temperature.				Hygrometry.				Wind.		Rain.	Weather.
					Mean.	Maximum.	Range.	Minimum.	Mean wet bulb.	Vapour tension.	Dew point.	Humidity.	Prevailing direction.	Miles recorded.		
1902.		°		Inches.	°	°	°	°	°	Inches	°	%			Inches.	
Aug.	31st	150·8	9·1	29·565	84·3	91·1	12·8	78·3	80·1	0·972	78·4	83	N, ENE and E ...	160	0·26	Partially cloudy, p.
Sept.	1st	153·9	3·0	·526	82·7	86·7	8·1	78·6	80·1	·995	79·1	89	ENE, E and E by S.	193	0·89	Chiefly cloudy, o, d, p.
,,	2nd	146·6	5·7	·642	84·0	89·4	11·2	78·2	80·5	·998	79·2	86	SE and SSW ...	110	0·30	Partially cloudy, o, p.
,,	3rd	150·1	3·5	·687	85·1	89·8	10·5	79·3	81·7	1·039	80·4	86	S by W and SE ...	62	0·06	Chiefly cloudy, d.
,,	4th	151·7	6·4	·678	85·6	92·2	12·1	80·1	81·9	1·040	80·4	85	SE and calm ...	54	0·13	Partially cloudy, p.
,,	5th	144·1	0·6	6 68	84·1	89·1	8·8	80·3	81·0	1·020	79·8	87	SE and E ...	64	0·06	Chiefly cloudy, o, d, t, ⸝.
,,	6th	149·0	1·5	·554	82·9	87·1	8·1	79·0	79·9	0 982	78·7	87	E and ESE ...	97	0·21	Chiefly cloudy, o, d, p.

	Inches.
The mean pressure of the seven days	29·616
The average pressure of the corresponding period for 24 years, Surveyor-General.'s Office	29·646
	Hours.
The total number of hours of bright sunshine	29·8
The maximum possible number of hours of sunshine	87·5
	°
The mean temperature of the seven days	84·1
The average temperature of the corresponding period for 24 years, Surveyor-General's Office	83·5
The extreme variation of temperature	14·0
The maximum temperature	92·2
	Miles.
The highest velocity of the wind in one hour	14
	%
The mean relative humidity	86
The average relative humidity of the corresponding period for 24 years, Surveyor-General's Office	86
	Inches.
The total fall of rain from 31st August to 6th September 1902	1·91
The average fall of the corresponding period for 24 years, Surveyor-General's Office	2·48
The total fall from 1st January to 6th September 1902	53·48
The average fall of the corresponding period for 24 years, Surveyor-General's Office	50·50

The mean pressure, temperature, &c., are deduced from the traces of the Barograph and Thermograph, and from eye observations.

The maximum and minimum temperatures are obtained from self-registering thermometers. All the thermometers are verified, and the readings have been corrected to a standard constructed and verified at the Kew Observatory. They are exposed under a thatched shed open at the sides, and are suspended four feet above the ground.

The barometer readings are corrected approximately to those of the standard, Newman's No. 86, formerly at the Surveyor-General's Office.

The hygrometric elements are obtained from Tables III, IV, and V of the official tables computed in the Meteorological Office, and based on Regnault's modifications of August's formula.

The directions and the movement of the wind are taken from the trace of a Beckley's anemograph.

The mouth of the rain-gauge is one foot above the ground.

o, overcast; d, drizzling rain; p, passing temporary showers; t, thunder; ⸝, lightning.

G. W. KÜCHLER,
for *Meteorological Reporter to the Govt. of India and Director-General of Indian Observatories.*

METEOROLOGICAL OFFICE, GOVT. OF INDIA;
Alipore (Calcutta), the 8th September 1902.

EASTERN BENGAL STATE RAILWAY.

Abstract of Principal Commodities carried over the Eastern Bengal State Railway during the month of May 1902 as compared with the same month of the previous year.

No.	Staples.	1902.	1901.	Increase in 1902.	Decrease in 1902.	Explanations of fluctuations by Traffic Superintendent.
		Tons.	Tons.	Tons.	Tons.	
1	Apparel, including drapery, haberdashery, millinery, uniforms, accoutrements, boots and shoes.	35	22	13	.....	
2	Coal and coke carried for the Public and Foreign Railways.	20,872	23,754	.....	2,882	
3	Cotton—					
	(1) Raw	191	347	.....	156	
	(2) Manufactured—					
	(a) Twist and yarn, European	237	334	.....	97	
	(b) Ditto, Indian	184	331	.....	147	
	(c) Piece-goods, European	1,586	2,056	.....	470	
	(d) Ditto, Indian	35	47	.....	12	
	(e) Others	.....	.....	.....	.....	
4	Chemicals, excepting saltpetre	30	42	.....	12	
5	Drugs—					
	(1) Intoxicating, other than opium	59	43	16	.....	
	(2) Non-intoxicating—					
	(a) Medicinal preparations	.....	.....	.....	.....	
	(b) Others	68	67	1	.....	
6	Dyes and Tans—					
	(1) Al (Morinda citrifolia)	.....	.....	.....	.....	
	(2) Alizarine and Aniline dyes	.....	.....	.....	.....	
	(3) Cutch	17	21	.....	4	
	(4) Indigo	.....	.....	.....	.....	
	(5) Myrabolams	.....	.....	.....	.....	
	(6) Tanning barks	.....	.....	.....	.....	
	(7) Turmeric	674	610	64	.....	
	(8) Others	8	12	.....	4	
7	Fodder—					
	(1) Oilcake	1,099	717	382	.....	
	(2) Hay, straw and grass	1,403	4,251	.....	2,688	
8	Fruits and vegetables, fresh	431	448	.....	17	
9	Grain and pulse—					
	(1) Gram and pulse	8,144	4,975	3,169	.....	
	(2) Jawar and bajra	.....	.....	.....	.....	
	(3) Rice in the husk	6,163	9,487	.....	3,324	
	(4) Do. not in the husk	3,779	7,879	.....	4,100	
	(5) Wheat	1,419	474	945	.....	
	(6) Do. flour	396	162	234	.....	
	(7) Others	137	206	...	69	
10	Hides and skins—					
	(1) Hides of cattle—					
	(a) Dressed or tanned	.....	.....	.....	.....	
	(b) Raw	799	759	40	.....	
	(2) Skins of sheep and other animals—					
	(a) Dressed or tanned	.....	.....	.....	.....	
	(b) Raw	64	80	.....	16	
11	Horns	13	3	10	.....	
12	Hemp (Indian) and other fibres, excluding jute.	180	274	.....	94	
13	Jute—					
	(1) Raw	16,885	10,592	6,293	.....	
	(2) Gunny-bags and cloth	1,499	1,295	204	.....	
14	Lac	10	47	.....	37	
15	Leather—					
	(1) Unwrought	.....	.....	.....	.....	
	(2) Wrought, excepting boots and shoes	.....	2	.....	2	
16	Liquors—					
	(1) Ale and beer	21	19	2	.....	
	(2) Spirits of all kinds, including country spirit.	8	.....	8	.....	
	(3) Wine	55	56	.....	1	
	(4) All other sorts, including toddy and fermented liquor, other than ale and beer.	.....	.....	.....	.....	
17	Metals—					
	(1) Brass, unwrought	31	23	8	.....	
	(2) Do., wrought	120	158	.....	38	
	(3) Copper, unwrought	10	13	.....	3	
	(4) Do., wrought	2	14	.....	12	
	(5) Iron and steel—					
	(a) Cast	41	113	.....	72	
	(b) Unwrought	.....	.....	.....	.....	
	(c) Wrought	1,100	1,360	.....	260	
	(d) Manufactures	268	310	.....	42	
	(6) Others	136	224	.....	88	
18	Oils—					
	(1) Kerosine	8,523	10,565	.....	2,042	
	(2) Castor	13	21	.....	8	
	(3) Cocoanut	126	166	.....	40	
	(4) Mustard and rape	192	439	.....	247	
	(5) Others	33	72	.....	39	
19	Oilseeds—					
	(1) Castor	15	14	11	.....	
	(2) Earthnuts	.....	.....	.....	.....	
	(3) Linseed	4,713	1,629	3,084	.....	
	(4) Poppy	.....	.....	.....	.....	
	(5) Rape and mustard	5,349	3,142	3,207	.....	
	(6) Til or jinjili	12	.....	12	.....	
	(7) Others	62	36	26	.....	
20	Opium	3	1	2	.....	
21	Paper and pasteboard	674	519	155	.....	
22	Provisions—					
	(1) Dried fruits and nuts	3	.....	3	.....	
	(2) Ghee	48	51	.....	3	
	(3) Others	1,135	1,426	.....	291	

No.	Staples.	1902.	1901.	Increase in 1902.	Decrease in 1902.	Explanations of fluctuations by Traffic Superintendent.
		Tons.	Tons.	Tons.	Tons.	
23	Railway Plant, &c., for the Public and Foreign Railways—					
	(1) Locomotive engines and tenders and parts thereof	59	.....	59	.....	
	(2) Carriages and trucks and parts thereof	.....	.....	.....	.....	
	(3) Materials—					
	(a) Steel rails and fish-plates	100	.....	100	.....	
	(b) Sleepers and keys of steel and cast-iron.	305	2,756	.....	2,451	
	(c) Others	203	119	84	.....	
24	Salt	5,712	7,627	.....	1,915	
25	Saltpetre and other saline substances—					
	(1) Saltpetre	4	5	.....	1	
	(2) Other saline substances	92	153	.....	61	
26	Silk—					
	(1) Raw—					
	(a) Foreign	.....	.....	.....	.....	
	(b) Indian	56	29	27	.....	
	(2) Piece-goods—					
	(a) Foreign	.....	.....	.....	.....	
	(b) Indian	.....	.....	.....	.....	
27	Spices—					
	(1) Betelnuts	955	918	37	.....	
	(2) Cardamoms	20	25	.....	5	
	(3) Chillies	213	287	.....	74	
	(4) Ginger	108	211	.....	103	
	(5) Pepper	27	23	4	.....	
	(6) Others	126	321	.....	195	
28	Stone and lime	1,888	3,466	.....	1,578	
29	Sugar—					
	(1) Refined or crystallized, including sugar-candy.	544	780	.....	236	
	(2) Unrefined—					
	(a) Sugar	501	842	.....	341	
	(b) Gur, *rab*, jaggery, molasses, and other saccharine produce.	797	1,567	.....	770	
30	Tea—					
	(1) Foreign	.....	.....	.....	.....	
	(2) Indian	1,231	775	456	.....	
31	Tobacco—					
	(1) Unmanufactured	4,450	3,960	490	.....	
	(2) Manufactured—					
	(a) Cigars	28	21	7	.....	
	(b) Other sorts					
32	Wood—					
	(1) Timber, unwrought	711	1,068	.....	357	
	(2) Manufactures	157	206	.....	49	
33	Wool—					
	(1) Raw	97	238	.....	141	
	(2) Manufactured—					
	(a) Carpets and rugs	3	12	.....	9	
	(b) Piece-goods, European					
	(c) Ditto, Indian					
	(d) Other sorts of manufactures ...					
34	All other articles of merchandise	6,838	8,314	...	1,476	
	Total ...	115,405	123,421	19,153	27,070	

HARPRASAD DAR,
for *Examiner of Accounts, E. B. S. Railway.*

CALCUTTA, *the 1st September 1902.*

Weekly Return of Traffic Receipts on Indian Railways.

EAST INDIAN RAILWAY.

Approximate Return of Traffic for week ended 23rd August 1902 on 1,913·49 miles open.

	Coaching Traffic.		Merchandise and Mineral Traffic.		Other earnings (estimated).	Total earnings.	Traffic Train-miles run.		
	Number of passengers.	Coaching receipts.	Weight carried.	Receipts.			Coaching.	Merchandise.	Total.
		Rs. A. P.	Mds. S.	Rs. A. P. (a)	Rs. A. P.	Rs. A. P.			
Total traffic for the week ..	353,398	3,33,919 2 0	41,12,667 20	6,68,173 3 0	19,122 0 0	10,21,214 5 0	100,821	159,756	260,577
Or per mile of railway ...	...	174 8 1	...	349 3 1	9 15 11	533 11 1	.....	.....	.....
For previous 6½ weeks of half-year.	2,582,666*	24,60,049 15 0*	3,00,09,280 30†	51,34,878 3 0†	1,42,709 0 0‡	77,37,637 2 0	734,973§	1,159,969§	1,894,942
Total for 6¾ weeks ..	2,936,074	27,93,969 1 0	3,41,14,948 10	58,03,051 6 0	1,61,831 0 0	87,58,851 7 0	844,794	1,319,725	2,164,519
Comparison.									
Total for corresponding week of previous year.	358,115	3,35,887 11 5	44,31,804 30	8,01,862 7 9	21,047 0 9	11,58,797 3 11	105,484½	184,183½	289,669½
Per mile of railway corresponding week of previous year.	.....	182 11 10	. ....	436 4 2	11 7 3	630 7 3	.....	.....	.....
Total for corresponding 7½ weeks of previous year.	3,131,739½	32,91,430 11 2	4,10,91,434 0	73,30,221 10 9	1,57,086 4 11	1,07,78,738 10 10	859,207½	1,624,368½	2,483,636

(a) The decrease is chiefly in coal

* Added No. of passengers 2,110 and deducted Rs. 3,902 } On account of difference between the approximate and audited figures for the week ended 19th
† Do. Mds. 2,34,000 and ,, 25,232 } July 1902.
‡ Deducted ,, 10,602
§ Audited figures up to 19th July 1902.

1902. *Abstract of progressive weekly returns of all earnings for 1902 in comparison with 1901.*

Open mileage.	Period.	Coaching Traffic.		Merchandise and Mineral Traffic.		Other earnings.	Total.	Per mile of Railway.	Train mileage.	
		No. of Passengers.	Rs.	Mds.	Rs.	Rs	Rs.	Rs.	No.	Rate Rs. A P.
*1 913 49	12 days of July ...	716,003	6,65,787	'86,38,092	14,63,239	51,611	21,60,637	1,129	509,575	4 3 10
*1,913·49	Week ended 19th July .	441,138	3,78,481	47,12,891	8,09,446	16,685	11,97,612	626	288,531	4 2 5
1,913·49	,, ,, 26th ,,	369,578	3,75,199	42,41,383	7,30,928	29,683	11,35,810	593	273,960	4 2 4
1,913 49	,, ,, 2nd August	340,160	3,47,770	41,34,050	7,14,228	23,745	10,84,743	567	284,300	3 13 1
1,913 49	,, ,, 9th ,, ,,	351 528	3,46,707	40,99,290	7,13,060	22,646	10,82,393	566	272 008	3 15 8
1,913·49	,, ,, 16th ,, ...	357,679	3,46,046	41,45,085	7,10,908	19 639	10,76,593	563	260,568	4 0 7
1,913 49	,, ,, 23rd ,, ...	358,388	3,33,919	41,12,667	6,68,173	19,122	10,21,214	534	269,577	3 12 7
	Totals up todate ...	2,936,074	27,93,969	3,41,14,948	58,03,052	1,61,831	87,58,852	593	2,164,519	4 0 9

Abstract of progressive weekly returns of all earnings for 1902 in comparison with 1901—concluded. *1901*

		No. of Passengers.	Rs.	Mds.	Rs	Rs	Rs.	Rs	No	Rate. Rs. A P.
1,837·46	12 days of July	707,303	7,02,573	1,04,38,391	18,92,791	34,086	26,80,400	1,464	586,902	4 9 4
1,837·79	Week ended 20th July	335,819	3,75,044	54,41,787	9,82,248	19,453	13,77,344	749	325,917	4 3 7
1,838·04	,, ,, 27th ,, ,,	416,037	4,34,998	50,18,440	9,76,870	20,231	14,31,099	779	325,316	4 6 5
1,838·04	,, ,, 3rd August	427,584	4,86,766	52,95,540	9,67,492	19 932	14,74,210	802	335,217	4 6 4
1,838 04	,, ,, 10th ,, ...	418,883	4,53,909	53,28,299	8,91,256	20,579	13,65,744	743	310,146	4 4 6
1,838 04	,, ,, 17th ,,	398,048	4,41,653	51 37,112	8,18,702	21,789	12,82,144	698	301,468	4 4 1
1,838 04	,, ,, 24th ,, ...	358,115	[3,35,888	44 31,803	8,01,862	21,047	11,58,797	630	289,670	4 0 0
	Totals up to date ...	3,131,739	33,91,451	4,10,91,434	73,30,221	1,57,086	1,07,78,738	746	2,483,636	4 5 5

* Audited figures.

TARKESSUR BRANCH RAILWAY.

Approximate Return of Traffic for week ended 23rd August 1902 on 22·23 miles open.

	Coaching Traffic.		Merchandise and Mineral Traffic.		Other earnings (estimated).	Total earnings.	Traffic Train-miles run.		
	No of passengers.	Coaching receipts.	Weight carried	Receipts.			Coaching.	Merchandise.	Total.
		Rs A. P	Mds. S.	Rs. A. P.	Rs. A. P.	Rs. A P			
Total traffic for the week ...	17,986	4,167 0 0	21,378 20	541 7 0	6 0 0	4,754 7 0	1,046	142	1,188
Or per mile of railway ...	...	187 7 2	... .	26 2 6	0 4 4	213 14 0	..	.....	..
For previous 6½ weeks of half-year	148,788*	35,675 14 0*	1,45,341 20†	3,924 12 0†	47 0 0‡	39,647 10 0	7,203§	849§	8,052
Total for 7½ weeks ...	166,774	39,842 14 0	1,66,720 0	4,506 3 0	53 0 0	44,402 1 0	8,249	991	9,240
Comparison.									
Total for corresponding week of previous year.	18,080½	3,900 11 0	8,840 20	291 0 0	6 6 3	4,198 1 3	1,150	38	1,188
Per mile of railway corresponding week of previous year.	... ..	175 7 6	... ..	13 1 6	0 4 7	188 13 7	.....	.....	.....
Total for corresponding 7½ weeks of previous year.	174,500	30,484 12 8	62,133 20	2,476 3 0	60 12 3	42,021 11 11	8,909	507	9,416

* Added No of passengers 1,226 and Rs. 305 } on account of difference between the approximate and audited figures for the week ended 19th
† D ducted Mds. 1,075 and ,, 11 } July 1902.
‡ Ad ded ,, 3
§ Au ed figures up to 19th July 1902.

TARKESSUR BRANCH RAILWAY—*concluded.*

1902. *Abstract of progressive weekly returns of all earnings for 1902 in comparison with 1901.*

Open mileage.	Period.	Coaching Traffic.		Merchandise and Mineral Traffic.		Other earnings.	Total.	Per mile of railway.	Train mileage.	
		No. of passengers.	Rs.	Mds.	Rs.	Rs.	Rs.	Rs.	No.	Rate. Rs. A. P.
*22·23	12 days of July ...	40,661	10,019	72,607	1,575	10	11,604	522	2,068	5 9 9
*22·23	Week ended 19th July	31,057	6,929	10,687	403	19	7,351	330	1,232	5 15 4
22·23	,, ,, 26th ,,	21,037	5,123	13,638	371	8	5,502	247	1,188	4 10 1
22·23	,, ,, 2nd August	17,793	4,097	15,096	363	7	4,467	201	1,188	3 12 2
22·23	,, ,, 9th ,, ...	19,044	4,717	17,069	909	7	5,633	253	1,188	4 11 10
22·23	,, ,, 16th ,, ...	18,606	4,791	16,245	304	5	5,100	229	1,188	4 4 8
22·23	,, ,, 23rd ,, ...	17,986	4,167	21,378	581	6	4,754	214	1,188	4 0 0
	Totals up to date ...	166,774	39,843	1,66,720	4,506	53	44,402	250	9,340	4 12 11

Abstract of progressive weekly returns of all earnings for 1902 in comparison with 1901—concluded. *1901.*

		No. of passengers.	Rs.	Mds.	Rs.	Rs	Rs.	Rs.	No.	Rate. Rs. A. P.
22 23	13 days of July ,,	41,388	9,910	20,302	766	18	10,714	462	2,344	4 12 8
22·23	Week ended 20th July .	19,592	4,513	5,910	207	8	4,808	210	1,188	4 0 9
22·23	,, ,, 27th ,,	30,403	6,411	7,351	310	6	727	303	1,232	5 7 4
22·23	,, ,, 3rd August	24,864	5,480	5,886	254	5	5,738	258	1,188	4 13 2
22·23	,, ,, 10th ,, ..	21,089	4,807	6,087	312	10	5,130	231	1,188	4 5 1
22 23	,, ,, 17th ,, ..	19,154	4,434	7,207	276	6	4,716	212	1,188	3 15 7
22 23	,, ,, 24th ,,	18,080	3,901	8,941	291	0	4,198	189	1,188	3 8 6
	Totals up to date ...	174,500	37,485	62,134	2,176	61	42,023	241	9,416	4 7 5

* Audited figures.

DELHI-UMBALLA-KALKA RAILWAY.

Approximate Return of Traffic for week ended 23rd August 1902, on 162·24 miles open.

	Coaching Traffic.		Merchandise and Mineral Traffic.		Other earnings (estimated).	Total earnings.	Traffic Train-miles run.		
	No. of Passengers.	Coaching Receipts.	Weight carried.	Receipts.			Coaching.	Merchandise.	Total.
		Rs. A. P.	Mds. S.	Rs. A. P.	Rs. A. P.	Rs. A. P.			
Total traffic for the week	19,453	16,863 10 0	76,170 20	8,196 1 0	42 0 0	25,100 11 0	8,343	4,627	12,970
Or per mile of railway	...	103 14 11	...	50 8 4	0 4 2	154 11 5	...	...	...
For previous 6½ weeks of half-year	151,894*	1,24,211 4 0*	10,36,636 10†	67,912 7 0†	311 0 0‡	1,92,434 11 0	56,920§	31,820§	88,749
Total for 7½ weeks ...	171,347	1,41,073 14 0	11,12,815 30	76,108 8 0	353 0 0	2,17,535 6 0	65,272	36,447	101,719
COMPARISON.									
Total for corresponding week of previous year.	20,409½	15,230 8 9	61,930 0	10,682 4 0	23 6 6	25,946 3 3	7,773½	3,2 29	11,002½
Per mile of railway corresponding week of previous year.	...	93 14 0	...	65 13 6	0 3 4	159 14 10	...	...	...
Total for corresponding 7½ weeks of previous year.	170,943	1,42,865 0 8	9,47,014 20	92,041 9 7	349 2 0	2,35,255 12 3	63,276	27,943	91,219

* Deducted No. of passengers 399 and Rs. 497
† Added maunds 4,65,292 and ,, 6,296 } On account of difference between the approximate and audited figures for the week ended 19th July 1902.
‡ Deducted ,, 12
§ Audited figures up to 19th July 1902.

1903. *Abstract of progressive weekly returns of all earnings for 1902 in comparison with 1901.*

Open mileage.	Period.	Coaching Traffic.		Merchandise and Mineral Traffic.		Other earnings.	Total.	Per mile of railway.	Train mileage.	
		Number of Passengers.	Rs.	Mds	Rs	Rs.	Rs.	Rs.	No.	Rate. Rs. A. P.
*102·24	12 days of July ...	40,893	32,091	1,44,404	19,447	93	51,631	319	22,783	2 4 5
*162 24	Week ended 19th ,, ...	22,411	17,982	5,02,416	15,264	42	33,272	205	13,707	2 6 10
162 24	,, ,, 26th ,, ...	26,020	19,866	93 854	7,900	47	27,753	171	12,928	2 2 6
162·24	,, ,, 2nd Aug. .	20,064	19,074	94,678	8,096	41	27,211	167	13,123	2 1 4
162·24	,, ,, 9th ,, .	21,853	17,892	77,212	9,649	45	27,586	170	13,270	2 1 8
162 24	,, ,, 16th ,,	20,646	17,846	80,975	7,853	43	24,782	153	12,932	1 14 8
162·24	,, ,, 23rd ,, ..	19,453	16,803	76,180	8,196	42	25,101	155	12,970	1 15 0
	Totals up to date ..	171,347	1,41,074	11,12,816	76,109	353	2,17,536	174	101,719	2 2 5

Abstract of progressive weekly returns of all earnings for 1902 in comparison with 1901—concluded. *1901.*

		Number of Passengers.	Rs.	Mds.	Rs.	Rs.	Rs.	Rs.	No.	Rate. Rs. A. P.
162 24	13 days of July ...	41,383	31,193	3,15,809	30,744	82	62,018	384	21,946	2 13 3
162·24	Week ended 20th ,, .	23,979	17,801	88,131	10,705	49	28,535	176	11,711	2 7 9
162·24	,, ,, 27th ,, ...	22,024	18,937	85,877	10,092	43	29,062	179	11,344	2 9 5
162·24	,, ,, 3rd Aug. .	21,832	22,416	94,502	11,814	60	34,288	211	11,363	3 0 2
162·24	,, ,, 10th ,,	21,587	19,225	1,98,344	11,540	34	30,799	190	11,860	2 9 7
162·24	,, ,, 17th ,,	19,937	16,073	1,02,422	8,466	48	24,587	152	12,104	2 0 6
162 24	,, ,, 24th ,, ...	20,400	15,231	91,930	10,684	33	25,948	160	11,002	2 5 9
	Totals up to date	170,942	1,42,886	9,47,015	92,041	349	2,35,255	185	91,219	2 9 3

* Audited figures.

SOUTH BEHAR RAILWAY.

Approximate Return of Traffic for week ended 23rd August 1902, on 78·76 miles open.

	Coaching Traffic.		Merchandise and Mineral Traffic.		Other earnings (estimated).	Total earnings.	Traffic Train-miles run.		
	Number of passengers.	Coaching receipts.	Weight carried.	Receipts.			Coaching.	Merchandise.	Total.
		Rs. A. P.	Mds. s.	Rs. A. P.	Rs. A. P.	Rs. A. P.			
Total traffic for the week	9,188	5,780 0 0	29,473 10	1,923 4 0	26 0 0	7,709 4 0	1,979	469	2,448
Or per mile of railway		73 2 2	...	24 6 8	0 5 3	97 14 1	...	...	...
For previous 6½ weeks of half-year	77,448*	42,176 1 0*	2,51,802 20†	15,037 11 0†	154 0 0‡	57,367 12 0	13,111§	5,868§	18,979
Total for 7½ weeks ...	86,636	47,936 1 0	2,81,275 30	16,960 15 0	180 0 0	65,077 0 0	15,090	6,337	21,427
COMPARISON.									
Total for corresponding week of previous year	11,546	6,211 13 7	35,066 10	2,906 8 0	19 8 0	9,137 13 7	2,119	1,188½	3,307½
Per mile of railway corresponding week of previous year	...	78 13 11	...	36 14 5	0 4 0	116 0 4	...	...	...
Total for corresponding 7½ weeks of previous year	152,252	69,450 12 6	3,01,123 30	24,584 3 0	138 11 6	94,173 11 0	16,150	9,916½	26,066½

* Added No. of passengers 687 and deducted Rs. 56
† Deducted maunds 5,426 and added ,, 36 } On account of difference between the approximate and audited figures for the week ended 19th
‡ Do. ,, 10 } July 1902.
§ Audited figures up to 19th July 1902.

1902. *Abstract of progressive weekly returns of all earnings for 1902 in comparison with 1901.*

Open mileage.	Period.	Coaching Traffic.		Merchandise and Mineral Traffic.		Other earnings.	Total.	Per mile of railway.	Train mileage.	
		Number of passengers.	Rs.	Mds.	Rs.	Rs.	Rs.	Rs.	No.	Rate. Rs. A. P.
*78·76	12 days of July ...	23,554	12,210	70,897	4,578	47	16,835	214	4,961	3 6 3
*78·76	Week ended 19th ,, ...	12,311	6,581	33,423	2,137	8	8,734	111	2,678	3 4 1
78·76	,, ,, 26th ,, ...	11,105	6,518	40,118	2,251	31	8,700	112	2,756	3 3 0
78·76	,, ,, 2nd Aug. ..	10,414	5,543	33,613	2,183	28	7,754	98	2,914	2 10 7
78·76	,, ,, 9th ,, ...	10,236	5,775	31,048	1,840	30	7,651	97	2,835	2 11 2
78·76	,, ,, 16th ,, ...	9,738	5,849	36,108	2,045	27	7,921	97	2,835	2 11 0
78·76	,, ,, 23rd ,, ...	9,183	5,760	29,473	1,923	26	7,709	98	2,448	3 2 5
	Totals up to date ...	86,586	47,936	2,81,276	16,961	180	65,077	107	21,427	3 0 7

Abstract of progressive weekly returns of all earnings for 1902 in comparison with 1901—concluded. *1901.*

		No. of Passengers.	Rs.	Mds.	Rs.	Rs.	Rs.	Rs.	No.	Rate. Rs. A. P.
78·76	13 days of July ...	20,350	10,058	87,747	6,177	24	16,259	206	6,143	2 10 4
78·76	Week ended 20th ,, ...	12,398	5,865	50,236	3,121	8	8,994	114	3,307	2 11 6
78·76	,, ,, 27th ,, ...	19,907	6,084	49,004	2,883	16	10,984	139	3,308	3 5 2
78·76	,, ,, 3rd Aug. ...	32,988	13,456	51,096 *	3,215	14	16,885	214	3,386	4 15 9
78·76	,, ,, 10th ,, ...	31,942	13,849	49,144	3,542	34	17,425	221	3,307	5 4 3
78·76	,, ,, 17th ,, ...	23,211	11,726	38,833	2,740	21	14,489	184	3,308	4 6 1
78·76	,, ,, 24th ,, ...	11,340	6,212	35,066	2,906	20	9,138	116	3,307	2 12 2
	Totals up to date ...	152,252	69,451	3,01,124	24,584	139	94,174	153	26,066	3 9 10

* Audited figures.

BENGAL CENTRAL RAILWAY COMPANY, LIMITED.

Approximate Return of Traffic and Mileage for the week ended 23rd August 1902 on 139 miles open.

	Coaching Traffic.		Merchandise and Mineral Traffic.		Other earnings.	Total earnings.	Traffic Train-miles run.		
	Number of passengers.	Coaching receipts.	Weight carried.	Receipts.			Coaching.	Merchandise.	Total.
		Rs. A. P.	Mds. s.	Rs. A. P.	Rs. A. P.	Rs. A. P.			
Total traffic for the week ...	2,023	12,284 0 0	90,975 0	10,430 0 0	51 0 0	22,765 0 0	3,566	3,605	7,171
Or per mile of railway	223	94 0 0*	654 0	75 0 0	.....	169 0 0	.....	.....	.....
For previous 7 weeks of half-year	239,967	96,698 0 0	3,50,769 0	36,643 0 0	751 0 0	1,34,092 0 0	22,510	19,329	41,849
Total for 8 weeks ...	268,990	1,04,981 0 0	4,41,744 0	47,073 0 0	802 0 0	1,56,857 0 0	26,076	22,944	49,020
COMPARISON.									
Total for corresponding week of previous year	30,182	13,396 0 0	1,52,807 0	17,800 0 0	190 0 0	30,495 0 0	2,890	6,384	9,274
Per mile of railway corresponding week of previous year ..	233	95 0 0	1,097 0	128 0 0	1 0 0	225 0 0	.....	.....	.....
Total to corresponding date of previous year	284,400	1,04,759 0 0	7,03,123 0	83,536 0 0	97,1·9 0 0	2,14,578 0 0	24,961	32,127	57,088

* Coaching traffic calculated on 130 miles only.

EASTERN BENGAL STATE RAILWAY.

(INCLUDING N. B., K.-D., DACCA, AND ASSAM-BEHAR SECTIONS.)

Approximate Return of Traffic and Mileage for the week ended 23rd August 1902 on 861 miles open.

	COACHING TRAFFIC.		MERCHANDISE AND MINERAL TRAFFIC.		Other earnings (including ferry).	Total earnings.	TRAFFIC TRAIN-MILES RUN.		
	No. of passengers.	Coaching receipts.	Weight carried.	Receipts.			Coaching.	Merchandise.	Total.
		Rs. A. P.	Mds. S.	Rs. A. P.	Rs. A. P.	Rs. A. P.			
Total traffic for the week ...	207,460	89,790 0 0	10,81,590 0	2,50,190 0 0	11,190 0 0	3,51,140 0 0	37,902	41,044	79,546
Or per mile of railway	241	104 0 0	1,256 0	291 0 0	1 0 0*	396 0 0*	...	...	...
For previous 7 weeks of half-year	1,488,990	6,96,840 0 0	56,80,690 0	10,08,880 0 0	82,740 0 0	17,87,960 0 0	264,562	242,774	507,336
Total for 8 weeks ...	1,696,450	7,86,630 0 0	67,02,280 0	12,58,540 0 0	93,930 0 0	21,39,100 0 0	292,464	284,418	576,882
COMPARISON.									
Total for corresponding week of previous year ..	161,182	81,377 0 0	10,61,505 0	2,35,399 0 0	11,620 0 0	3,28,405 0 0	36,057	45,933	82,590
Per mile of railway corresponding week of previous year ...	180	95 0 0	1,243 0	276 0 0	1 0 0	372 0 0	...	...	...
Total to corresponding date of previous year	1,703,153	7,38,888 0 0	72,40,966 0	12,22,378 0 0	1,11,800 0 0	20,72,566 0 0	290,323	306,031	596,354

* Excluding ferry earnings.

BRAHMAPUTRA-SULTANPUR RAILWAY.

Approximate Return of Traffic and Mileage for the week ended 23rd August 1902 on 59·19 miles open.

	COACHING TRAFFIC.		MERCHANDISE AND MINERAL TRAFFIC		Other earnings (including ferry).	Total earnings.	TRAFFIC TRAIN-MILES RUN.		
	No. of passengers.	Coaching receipts.	Weight carried.	Receipts.			Coaching.	Merchandise.	Total.
		Rs. A. P.	Mds. S.	Rs. A. P.	Rs. A. P.	Rs. A. P.			
Total traffic for the week ...	6,280	1,530 0 0	46,100 0	4,870 0 0	20 0 0	6,720 0 0	1,078	1,082	2,160
Or per mile of railway ..	106	31 0 0	779 0	82 0 0	1 0 0	114 0 0	...	...	...
For previous 7 weeks of half-year	44,830	13,550 0 0	1,73,670 0	15,960 0 0	350 0 0	29,860 0 0	7,446	7,230	14,676
Total for 8 weeks ...	51,110	15,080 0 0	2,18,770 0	20,830 0 0	370 0 0	36,580 0 0	8,524	8,312	16,836
COMPARISON.									
Total for corresponding week of previous year	6,686	1,738 0 0	38,654 0	4,509 0 0	18 0 0	6,325 0 0	787	1,013	1,800
Per mile of railway corresponding week of previous year ...	113	30 0 0	655 0	77 0 0	... ..	107 0 0	...	...	...
Total to corresponding date of previous year	49,443	13,633 0 0	1,99,136 0	19,749 0 0	160 0 0	33,542 0 0	6,923	10,772	17,695

MYMENSINGH-JAGANNATHGANJ RAILWAY.

Approximate Return of Traffic and Mileage for the week ended 23rd August 1902 on 53·37 miles open.

	COACHING TRAFFIC.		MERCHANDISE AND MINERAL TRAFFIC.		Other earnings (including ferry).	Total earnings.	TRAFFIC TRAIN-MILES RUN.		
	No. of passengers.	Coaching receipts.	Weight carried.	Receipts.			Coaching.	Merchandise.	Total.
		Rs. A. P	Mds. S.	Rs. A. P.	Rs. A. P.	Rs. A. P.			
Total traffic for the week ...	8,010	2,130 0 0	25,430 0	1,210 0 0	30 0 0	3,370 0 0	1,104	1,030	2,134
Or per mile of railway	150	40 0 0	476 0	23 0 0	1 0 0	63 0 0	...	...	...
For previous 7 weeks of half-year	52,520	14,450 0 0	1,10,870 0	4,710 0 0	170 0 0	19,330 0 0	8,069	5,972	14,041
Total for 8 weeks ...	60,530	16,580 0 0	1,36,300 0	5,920 0 0	200 0 0	22,700 0 0	9,173	7,002	16,175
COMPARISON.									
Total for corresponding week of previous year	7,507	1,918 0 0	18,157 0	836 0 0	30 0 0	2,784 0 0	1,020	745	1,765
Per mile of railway corresponding week of previous year ..	141	36 0 0	340 0	15 0 0	1 0 0	52 0 0	...	...	...
Total to corresponding date of previous year	59,240	15,577 0 0	85,558 0	3,824 0 0	208 0 0	19,609 0 0	8,700	6,237	14,936

DACCA STATE RAILWAY.

Approximate Return of Traffic and Mileage for the week ended 23rd August 1902 on 86 miles open.

	Coaching Traffic.		Merchandise and Mineral Traffic.		Other earnings.	Total earnings.	Traffic Train-miles run.		
	No. of passengers.	Coaching receipts.	Weight carried.	Receipts.			Coaching.	Merchandise.	Total.
		Rs. A. P.	Mds. s.	Rs. A. P.	Rs. A. P.	Rs. A. P.			
Total traffic for the week ...	22,400	6,390 0 0	30,020 0	2,400 0 0	80 0 0	8,930 0 0	2,828	1,480	4,308
Or per mile of railway	260	74 0 0	349 0	29 0 0	1 0 0	104 0 0	...	...	...
For previous 7 weeks of half-year	177,720	40,240 0 0	1,25,330 0	10,500 0 0	1,580 0 0	61,410 0 0	19,354	10,642	29,996
Total for 8 weeks ...	200,120	55,630 0 0	1,55,350 0	13,050 0 0	1,660 0 0	70,340 0 0	22,182	12,122	34,304
Comparison.									
Total for corresponding week of previous year	22,710	6,981 0 0	34,778 0	3,514 0 0	64 0 0	10,559 0 0	2,865	1,567	4,432
Per mile of railway corresponding week of previous year ...	264	81 0 0	404 0	41 0 0	1 0 0	123 0 0	...	...	...
Total to corresponding date of previous year	191,358	55,021 0 0	2,13,587 0	19,370 0 0	4,705 0 0	79,096 0 0	22,750	15,172	37,922

COOCH BEHAR STATE RAILWAY.

Approximate Return of Traffic and Mileage for the week ended 23rd August 1902 on 33·78 miles open.

	Coaching Traffic.		Merchandise and Mineral Traffic.		Other earnings (including ferry).	Total earnings.	Traffic Train-miles run.		
	No. of passengers.	Coaching receipts.	Weight carried.	Receipts.			Coaching.	Merchandise.	Total.
		Rs. A. P.	Mds. s.	Rs. A. P.	Rs. A. P.	Rs. A. P.			
Total traffic for the week ...	2,420	930 0 0	9,490 0	1,130 0 0	20 0 0	2,080 0 0	248	2,118	2,366
Or per mile of railway ...	72	28 0 0	281 0	33 0 0	1 0 0	62 0 0	...	...	...
For previous 7 weeks of half-year	17,940	6,100 0 0	48,720 0	6,210 0 0	120 0 0	12,430 0 0	1,958	13,626	15,584
Total for 8 weeks ...	20,360	7,030 0 0	58,210 0	7,340 0 0	140 0 0	14,510 0 0	2,206	15,744	17,950
Comparison.									
Total for corresponding week of previous year	1,944	905 0 0	6,057 0	747 0 0	138 0 0	1,790 0 0	218	460	678
Per mile of railway corresponding week of previous year .	58	27 0 0	197 0	22 0 0	...	49 0 0	...	...	...
Total to corresponding date of previous year	15,805	6,001 0 0	51,030 0	5,527 0 0	1,088 0 0	12,616 0 0	1,777	6,276	8,053

Ballast train-miles, 1,800.

BENGAL AND NORTH-WESTERN RAILWAY.

Approximate Return of Traffic for the week ending 23rd August 1902 on a 1,261 miles open.

	Coaching Traffic.		Merchandise and Mineral Traffic.		Other earnings (estimated), including steam-boat.	Total earnings.	Traffic Train miles run.		
	No. of passengers.	Receipts.	Weight carried.	Receipts.			Coaching.	Merchandise.	Total.
		Rs.	Mds.	Rs.	Rs.	Rs.			
Total traffic for the week on (*a*) 1,261 miles open	178,400	72,790	5,02,540	(*b*) 56,540	10,390	(*b*) 1,48,720	40,007	(*c*) 33,236	73,243
Or per mile of railway	141·48	57·72	398·53	44·84	15·38	117·94	...	...	...
For previous 6¾ weeks of half-year	1,294,330	5,06,970	37,87,640	4,20,930	1,03,350	10,31,250	276,692	207,107	483,799
Total for 7¼ weeks ...	1,472,730	5,79,760	43,90,180	4,77,470	1,23,740	11,79,970	317,299	240,343	557,642
Comparison.									
Total for corresponding week of previous year on 1,251 miles open	176,302	75,337	3,99,607	46,196	17,050	1,38,593	34,921	(*d*) 27,032	61,953
Per mile of railway corresponding week of previous year ...	140·85	60·22	319·43	36·93	13·64	110·79	...	...	...
Total to corresponding date of previous year	1,436,490	5,43,990	44,00,264	5,06,632	1,33,015	11,82,637	269,378	229,594	498,872

(*a*) 1·46 miles removed from abandoned line of old Hajipur line at Muzafferpur yard from January 1902—*vide* statement XIII of half-yearly accounts.
(*b*) Rs 5,477 due to railway material and ballast trains, remainder to public traffic. Ballast trains earnings were hitherto credited monthly, they are now being dealt with weekly.
(*c*) Includes 7,566 miles of ballast trains run on open line.
(*d*) ,, 6,382 ,, ,, ,,

SEGOWLIE-RAKSAUL BRANCH RAILWAY.

(WORKED BY THE B. & N.-W. RAILWAY.)

Approximate Return of Traffic for the week ending 23rd August 1902 on 18 miles open.

	COACHING TRAFFIC.		MERCHANDISE AND MINERAL TRAFFIC.		Other earnings (estimated).	Total earnings.	TRAFFIC TRAIN-MILES RUN		
	Passengers carried.	Receipts.	Weight carried.	Receipts			Coaching.	Merchandise.	Total.
	No.	Rs.	Mds.	Rs.	Rs.	Rs.			
Total traffic for the week on 18 miles open	2	2	306	13	8	23	...	...	.
Or per mile of railway	0·11	0·11	17·11	0·72	0·45	1·28	...	...	.
For previous 6½ weeks of half-year	9,802	1,326	55,233	1,277	43	2,646	2,486	688	3,174
Total for 7½ weeks ...	9,864	1,328	55,541	1,290	51	2,669	2,486	688	3,174
COMPARISON.									
Total for corresponding week of previous year on 18 miles open	2,070	366	6,409	227	7	600	383	131	514
Per mile of railway corresponding week of previous year	148 33	20·34	356 06	12 50	0 39	33·32	...	...	. .
Total to corresponding date of previous year	18,390	2,037	57,240	1,720	87	4,504	3,324	672	3,996

NOTE.—The line was closed for all descriptions of traffic from 15th August 1902 owing to floods.

ASSAM-BENGAL RAILWAY.

Approximate Return of Traffic for the week ended 23rd August 1902 on 558 miles open for all descriptions of traffic, and an additional 31 miles for goods and parcels traffic only.

	COACHING TRAFFIC.		MERCHANDISE AND MINERAL TRAFFIC.		Other earnings	Total earnings.	TRAFFIC TRAIN-MILES RUN.		
	No. of passengers	Coaching receipts.	Weight carried.	Receipts.			Coaching.	Merchandise.	Total.
		Rs. A. P.	Mds. s.	Rs. A. P.	Rs. A. P.	Rs. A. P.			
Total traffic for the week ...	26,364	15,487 0 0	1,53,546 0	14,076 0 0	616 0 0	30,789 0 0	5,978	8,593	14,571
Or per mile of railway	47·25	27 75	260 69	24 92	1·06	53·73	10·71	14 50	25·30
For previous 7 weeks of half-year	194,795	1,12,402 0 0	10,90,814 0	1,02,431 0 0	9,248 0 0	2,24,171 0 0	44,014	54,591	98,605
Total for 8 weeks ..	221,159	1 27,970 0 0	12,50,360 0	1,17,107 0 0	9,874 0 0	2,54,960 0 0	49,992	63,184	113,176
COMPARISON.									
Total for corresponding week of previous year	23,733	13,514 0 0	94,156 0	15,760 0 0	603 0 0	29,877 0 0	7,042	4,082	12,024
Per mile of railway corresponding week of previous year ...	42·53	24·22	168 90	27·27	1 04	52·53	12 62	8 02	21 24
Total to corresponding date of previous year	207,490	1,24,484 0 0	8,71,213 0	1,30,639 0 0	9,927 0 0	2,65,050 0 0	50,994	47,553	98,547

FINANCIAL YEAR.

Approximate Statement of Gross Receipts of the Assam-Bengal Railway.

RECEIPTS FOR WEEK ENDED 23RD AUGUST 1902.			RECEIPTS FOR WEEK ENDED 24TH AUGUST 1901.			TOTAL RECEIPTS FROM 1ST APRIL 1902 TO 23RD AUGUST 1902.			TOTAL RECEIPTS FROM 1ST APRIL 1901 TO 24TH AUGUST 1901.			Total increase in 1902.	Total decrease in 1902.
Mean mileage worked.	Receipts.	Per mile worked.	Mean mileage worked.	Receipts.	Per mile worked.	Mean mileage worked.	Total receipts.	Per mile worked.	Mean mileage worked	Total receipts.	Per mile worked		
	Rs.	Rs.		Rs.	Rs.		Rs.			Rs.		Rs.	Rs.
389	30,789	53 73	578	29,877	52 53	589	7,09,933	...	573	7,85,848	...	. . .	75,91

SEGOWLIE-RAKSAUL BRANCH RAILWAY.

(WORKED BY THE B. & N.-W. RAILWAY.)

Approximate Return of Traffic for the week ending 30th August 1902 on 18 miles open.

	Coaching Traffic.		Merchandise and Mineral Traffic.		Other earnings (estimated).	Total earnings.	Traffic Train-miles run.		
	Passengers carried.	Receipts.	Weight carried.	Receipts.			Coaching.	Merchandise.	Total.
	No.	Rs.	Mds.	Rs.	Rs.	Rs.			
Total traffic for the week on 18 miles open	1,914	207	9,996	268	10	485	340	128	468
Or per mile of railway	106·33	11·50	555·33	14·80	0·55	26·94	.....	.....	.....
For previous 7½ weeks of half-year	9,804	1,328	55,541	1,290	51	2,669	2,480	688	3,174
Total for 8½ weeks ...	11,778	1,535	65,537	1,558	61	3,154	2,826	810	3,642
COMPARISON.									
Total for corresponding week of previous year on 18 miles open	2,763	312	8,303	199	9	500	422	82	504
Per mile of corresponding week of previous year	153·50	21·78	461·28	11·06	0·47	33·33	.....	.....	.....
Total to corresponding date of previous year	21,153	3,089	65,552	1,919	96	5,104	3,746	754	4,500

NOTE.—The line re-opened for all descriptions of traffic from 25th August 1902.

SEGOWLIE-RAKSAUL BRANCH RAILWAY.

(WORKED BY THE B. & N.-W. RAILWAY.)

Audited Return of Traffic for the last 9 days of June 1902 on 18 miles open.

	Coaching Traffic.		Merchandise and Mineral Traffic.		Other earnings.	Total earnings.	Traffic Train-miles run.		
	passengers carried.	Receipts.	Weight carried.	Receipts.			Coaching.	Merchandise.	Total.
		Rs. A. P.	Mds.	Rs. A. P.	Rs. A. P.	Rs. A. P.			
Total traffic for the week on 18 miles open	3,072	547 2 5	21,118	436 1 11	4 6 0	987 10 4	441	359	800
Or per mile of railway ...	170·67	30 6 4	1,173·22	24 3 8	0 5 11	54 13 11	.....	.....	.....
For previous 24½ weeks of half-year	63,320	10,630 10 5	3,21,658	8,116 6 7	801 8 0	19,608 9 0	9,131	3,289	12,420
Total for the 25½ weeks...	66,392	11,177 12 10	3,42,776	8,552 8 6	805 14 0	₹20,596 3 4	9,572	3,648	13,220
COMPARISON.									
Total for corresponding week of previous year on 18 miles open	2,417	430 8 5	14,625	275 10 6	—3 0 0	703 2 11	470	106	576
Per mile of corresponding week of previous year	134·28	23 14 8	812·50	15 5 1	—0 9 8	39 1 1	.....	.....	.....
Total to corresponding date of previous year	53,189	8,893 12 11	3,03,507	10,154 1 7	709 14 0	19,817 12 6	9,398	3,175	12,573

DARJEELING-HIMALAYAN RAILWAY COMPANY, LIMITED.

		Rs. A. P.	Rs. A. P.
Approximate earnings for the week ending 30th Aug. 1902 ...	Coaching ...	6,046 0 0	
	Goods ...	13,325 0 0	19,812 0 0
	Other earnings ...	441 0 0	
Audited earnings for the corresponding period of 1901 ...	Coaching ...	4,759 0 0	
	Goods ...	10,315 0 0	15,483 0 0
	Other earnings ...	409 0 0	
	Increase ...		4,329 0 0
Receipts per mile for the week ending 30th Aug. 1902			388 7 6
Ditto for the corresponding period of 1901			303 9 5
	Increase ...		84 14 1
Receipts from 1st July to 30th Aug. 1902			1,14,976 0 0
Ditto for the corresponding period of 1901			1,22,188 0 0
	Decrease ...		7,212 0 0

Printed at the Printing Office, and published by the Book Depôt, of the Bengal Secretariat, Writers' Buildings, in the City of Calcutta, on 10th September 1902.

REGISTERED No. C209.] No. 38 of 1902.

The Calcutta Gazette.

WEDNESDAY, SEPTEMBER 17, 1902.

CONTENTS.

	Page
PART I.—Orders and Notifications by the Lieutenant-Governor of Bengal, the High Court, Government Treasury, &c.	1335—1369
PART IA.—Orders and Notifications by the Government of India	155—156
PART IB.—Orders by the Lieutenant-Governor of Bengal	171—180
PART II.—Advertisements	1145—1178
PART III.—Acts of the Bengal Council	Nil
PART IV.—Bills of the Bengal Council	Nil
PART IVA.—Proceedings of the Bengal Legislative Council	Nil
PART V.—Acts of the Governor-General's Council assented to by the Governor-General	Nil
PART VI.—Bills introduced into the Council of the Governor-General for making Laws and Regulations or published under Rule 23:—	
A Bill further to amend the Provident Funds Act, 1897, with Statement of Objects and Reasons	39—40
A Bill to provide for imposing restrictions upon land in the vicinity of works of defence in order that such land may be kept free from buildings and other obstructions	41—42
(*Not issued with this copy of Gazette.*)	
APPENDIX.—Marine Notifications	345—351
SUPPLEMENT No. 38:—	
Resolution on the Annual Report of the Archæological Survey, Bengal Circle for the year ending with April 1902, and the Report	1291
Extract from the Report on the Administration of the Salt Department for the year 1901-1902	1322
Statistical Return of Crops, Meteorology, Rainfall, Vital Statistics, Irrigation Operation, Circular and Eastern Canal, Meteorological Observation, Railway Traffic Receipts, &c., &c.	1323—1357

PART I

Orders and Notifications by the Lieutenant-Governor of Bengal, the High Court, Government Treasury, &c.

ORDERS BY THE LIEUT.-GOVERNOR OF BENGAL.

No. 4072A.

APPOINTMENTS AND TRANSFERS.

GENERAL.—*No. 2468A.D.—The 10th September 1902.*—Mr. F. MacBlaine, District and Sessions Judge, Pabna, is appointed to act, in addition to his own duties, as Additional Sessions Judge of Nadia during the ensuing Civil Court vacation. He is authorised, under section 193 of the Code of Criminal Procedure, to receive and dispose of all criminal applications and cases during the absence, on vacation leave, of Mr. J. D. Cargill.

Pabna.
Nadia.

No. 2478A.D.—The 11th September 1902.—Mr. C. Fisher, District and Sessions Judge, Dinajpur, is appointed to act, in addition to his own duties, as Additional Sessions Judge of Rangpur during the ensuing Civil Court vacation. He is authorised, under section 193 of the Code of Criminal Procedure, to receive and dispose of all criminal applications and cases during the absence, on vacation leave, of Mr. Ambika Charan Sen.

Dinajpur.
Rangpur.

No. 2483A.D.—The 11th September 1902.—Mr. C. Fisher, District and Sessions Judge, Dinajpur, is appointed to act, in addition to his own duties, as Additional Sessions Judge of Purnea during the ensuing Civil Court vacation. He is authorised, under section 193 of the Code of Criminal Procedure, to receive and dispose of all criminal applications and cases during the absence, on vacation leave, of Mr. F. S. Hamilton.

Dinajpur.
Purnea.

No. 2498A.D.—The 11th September 1902.—Mr. H. Walmsley, Officiating District and Sessions Judge, Noakhali, is appointed to act, in addition to his own duties, as Additional Sessions Judge of Faridpur, and is authorised, under section 193 of the Code of Criminal Procedure, to receive and dispose of all criminal applications and cases, during the absence, on vacation leave, of Mr. M. Smither.

Noakhali.
Faridpur

No. 2502A.D.—The 11th September 1902.—Mr. W. B. Brown, Officiating District and Sessions Judge, Patna, is appointed to act, in addition to his own duties, as Additional Sessions Judge of Gaya, and is authorised, under section 193 of the Code of Criminal Procedure, to receive and dispose of all criminal applications and cases, during the absence, on vacation leave, of Mr. C. W. E. Pittar.

Patna.
Gaya.

No. 2508A.D.—The 11th September 1902.—Mr. Barada Charan Mitra, District and Sessions Judge, Cuttack, is appointed to act, in addition to his own duties, as Additional Sessions Judge of Midnapore, during the ensuing Civil Court vacation. He is authorised, under section 193 of the Code of Criminal Procedure, to receive and dispose of all criminal applications and cases, during the absence, on vacation leave, of Mr. Lokendranath Palit.

Cuttack.
Midnapore.

No. 2564A.D.—The 13th September 1902.—Mr. J. H. Temple, Officiating District and Sessions Judge, Backergunge, is appointed to act, in addition to his own duties, as Additional Sessions Judge of Jessore, and is authorised, under section 193 of the Code of Criminal Procedure, to receive and dispose of all criminal applications and cases, during the absence, on vacation leave, of Mr. W. H. Lee.

Backergunge.
Jessore.

No. 2566A.D.—The 13th September 1902.—Mr. W. H. Lee, Officiating District and Sessions Judge, Jessore, is appointed to act, in addition to his own duties, as Additional Sessions Judge of Backergunge, and is authorised, under section 193 of the Code of Criminal Procedure, to receive and dispose of all criminal applications and cases, during the absence, on vacation leave, of Mr. J. H. Temple.

Jessore.
Backergunge.

No. 2578A.D.—The 13th September 1902.—Babu Bhupendra Nath Mookerjee, substantive *pro tempore* Deputy Magistrate and Deputy Collector, Howrah, is posted temporarily to the Barasat subdivision of the 24-Parganas district.

Howrah.
24-Parganas.

No. 2582A.D.—The 15th September 1902.—Kumar Gopendra Krishna Deb, District and Sessions Judge, Hooghly, is appointed to act, in addition to his own duties, as Additional Sessions Judge of Burdwan, during the ensuing Civil Court vacation. He is authorised, under section 193 of the Code of Criminal Procedure, to receive and dispose of all criminal applications and cases, during the absence, on vacation leave, of Mr. S. J. Douglas.

Hooghly.
Burdwan.

No. 2613A.D.—The 15th September 1902.—Mr. T. W. Richardson, Officiating Additional Sessions Judge, 24-Parganas, is authorised, under section 193 of the Code of Criminal Procedure, to receive and dispose of all criminal applications and cases during the absence, on vacation leave, of Mr. C. P. Caspersz, Officiating District and Sessions Judge, 24-Parganas.

24-Parganas.

No. 2617A.D.—The 15th September 1902.—Mr. W. B. Brown, Officiating District and Sessions Judge, Patna, is appointed to act, in addition to his own duties, as Additional Sessions Judge of Muzaffarpur during the ensuing Civil Court vacation. He is authorised, under section 193 of the Code of Criminal Procedure, to receive and dispose of all criminal applications and cases during the absence, on vacation leave, of Mr. E. P. Chapman.

Patna.
Muzaffarpur.

No. 2629A.D.—The 16th September 1902.—Kumar Gopendra Krishna Deb, District and Sessions Judge, Hooghly, is appointed to act, in addition to his own duties, as Additional Sessions Judge of Bankura, during the ensuing Civil Court vacation. He is authorised, under section 193 of the Code of Criminal Procedure, to receive and dispose of all criminal applications and cases, during the absence, on vacation leave, of Mr. Kedar Nath Roy.

Hooghly.
Bankura.

VOLUNTEERS.—*No. 2610A.D.—The 15th September 1902.*—The services of Lieutenant Walter Hancock, Unattached List, 3rd (Cadet) Battalion, Calcutta Volunteer Rifles, are placed at the disposal of the Government of Burma.

ECCLESIASTICAL.—*No. 2546A.D.—The 13th September 1902.*—The Revd. W. K. Firminger, Chaplain of St. Stephen's Church, Kidderpore, is appointed to act, in addition to his own duties, as Chaplain of the Presidency General Hospital, during the absence, on leave, of the Revd. C. G. Stokoe, or until further orders.

24 Parganas.
Calcutta.

LEGISLATIVE.—*No. 2622A.D.—The 16th September 1902.*—In exercise of the powers conferred by section 45 of the Indian Councils Act, 1861 (24 and 25 Vict., c. 67), and section 1 of the Indian Councils Act, 1892 (55 and 56 Vict., c. 14), and the orders issued thereunder, and with the previous sanction of His Excellency the Viceroy and Governor-General, the Lieutenant-Governor is pleased to nominate Rai Tarini Pershad Bahadur to be a Member of the Council of the Lieutenant-Governor of Bengal.

Council.

LEAVE.

GENERAL.—*No. 2519A.D.—The 12th September 1902.*—Babu Rai Charan Ghosh, Deputy Magistrate and Deputy Collector, 24-Parganas, is allowed leave for one month, under article 291 of the Civil Service Regulations, with effect from the 18th October 1902.

24-Parganas.

No. 2534A.D.—The 12th September 1902.—Mr. C. P. Beachcroft, I.C.S., has been granted by His Majesty's Secretary of State for India an extension of furlough for one year.

No. 2539A.D.—The 12th September 1902.—Babu Kumud Bandhu Das Gupta, Deputy Magistrate and Deputy Collector, Burdwan, is allowed leave for one month and fifteen days, under article 291 of the Civil Service Regulations, with effect from the 4th October 1902.

Burdwan.

No. 2576A.D.—The 13th September 1902.—Babu Jagat Chandra Roy, Deputy Magistrate and Deputy Collector, Barasat, 24-Parganas, is allowed leave for two months and twenty-nine days, under article 291 of the Civil Service Regulations, with effect from the date on which he may avail himself of it.

24-Parganas.

VOLUNTEERS.—*No. 2606A.D.—The 15th September 1902.*—Sub-Lieutenant R. S. M. Curran, Calcutta Port Defence Volunteers, Naval Division, has been granted by the General Officer Commanding the Presidency District leave of absence for fourteen months, with effect from the 3rd September 1902.

POLICE.—*No. 2590A.D.—The 15th September 1902* —Mr. J. E. Armstrong, Officiating District Superintendent of Police, Angul, under orders of transfer to Jalpaiguri, is allowed leave for three weeks, under article 291 of the Civil Service Regulations, with effect from the date on which he availed himself of it.

Angul.
Jalpaiguri.

No. 2596A.D.—The 15th September 1902.—Mr. F. C. T. Halliday, Assistant Superintendent of Police, has been granted by His Majesty's Secretary of State for India a further extension of furlough on medical certificate for one month and twenty-eight days and extraordinary leave without allowances for two days in continuation.

POWERS.

GENERAL.—*No. 2491A.D.—The 11th September 1902.*—Mr. A. W. Dentith, Covenanted Deputy Collector, Giridih, Hazaribagh, is vested with the powers of a Collector under Act I of 1894 in that subdivision.

Hazaribagh.

The following orders are republished from the *Assam Gazette*:—

No. 4179J.—The 12th September 1902.—Babu Khettra Nath Dutta, Munsif of the Sadar station of Sylhet, is appointed to act as Subordinate Judge of Sylhet, during the absence, on deputation, of Babu Durga Charan Sen, with effect from the date of receiving charge.

No. 4180J.—The 12th September 1902.—Babu Hem Chandra Mitra, B.L., is appointed to act as Munsif of the Sadar station of Sylhet, *vice* Babu Khettra Nath Dutta, on deputation, with effect from the date of receiving charge.

No. 4182J.—The 12th September 1902 —The services of the following Munsifs in the district of Sylhet are placed at the disposal of the Government of Bengal:—

Babu Girish Chandra Sen,	Munsif of Maulvi Bazar.	
„ Jadab Chandra Bhattacharji,	„	„
„ Sri Hari Lahiri,	„	„ Karimganj.

C. E. BUCKLAND,
Chief Secy. to the Govt. of Bengal.

NOTIFICATION.

No. 4070A.—The 16th September 1902.—It is notified for general information that the second half-yearly departmental examination in 1902 of the Assistants of the Opium Department will be held at Ghazipur on Monday, the 3rd, and Tuesday, the 4th, November 1902.

Ghazipur.

C. E. BUCKLAND,
Chief Secy. to the Govt. of Bengal.

REVENUE DEPARTMENT.

NOTIFICATIONS.

No. 1810T R.—The 9th September 1902.—Whereas it is expedient that a survey shall be made and a record of rights prepared in respect of all lands included within the following Government estates in the district of Noakhali:—

Noakhali.

(1) Char Bhutakhali, tauzi No. 1548;
(2) Thak Char Algi, tauzi No. 1579;
(3) Thak Char Sekander, tauzi No. 1577;
(4) Char Pirbox, tauzi No. 1667;
(5) Char Dhupi, tauzi No. 1613;
(6) Thak Hudrakhali, tauzi No. 1574:

In exercise of the powers conferred by sections 101 (2) (*c*) and 101 (2) (*d*) of the Bengal Tenancy Act, VIII of 1885, as amended by Act III (B C.) of 1898, the Lieutenant-Governor is pleased to direct that a survey shall be made and a record of rights prepared in respect of all lands included within the external boundaries of the said estates in the district of Noakhali.

The particulars to be recorded in the survey and record of rights shall be the following:—

(*a*) The name of each tenant or occupant;

(*b*) The class to which each tenant belongs, that is to say, whether he is a tenure-holder, raiyat holding at fixed rates, settled raiyat, occupancy raiyat, non-occupancy raiyat or under-raiyat; and if he is a tenure-holder, whether he is a permanent tenure-holder or not, and whether his rent is liable to enhancement during the continuance of his tenure;

(*c*) The situation and quantity and one or more of the boundaries of the land held by each tenant or occupier;

(*d*) The name of each tenant's landlord;

(*e*) The rent payable at the time the record of rights is being prepared;

(*f*) The mode in which that rent has been fixed—whether by contract, by order of a Court, or otherwise;

(*g*) If the rent is a gradually increasing rent, the time at which, and the steps by which, it increases;

(*h*) The special conditions and incidents, if any, of the tenancy;

(*i*) If the land is claimed to be held rent-free—whether or not rent is actually paid, and, if not paid, whether or not the occupant is entitled to hold the land without payment of rent, and, if so entitled, under what authority.

No. 1871T.R.—The 12th September 1902.—Under section 3 of the Bengal Survey Act, V of 1875, the Lieutenant-Governor is pleased to order that a survey shall be made of all lands included within the external boundaries of the Sarkari Hata Government estate, situated in thana Hazaribagh, in the district of Hazaribagh, and that the boundaries of mauzas, tenures, fields, and holdings be demarcated on the said lands.

Hazaribagh

No. 1872T.R.—The 12th September 1902.—Under section 4 of the Bengal Survey Act, V of 1875, the Lieutenant-Governor is pleased to vest Babu Moti Lal Roy, Deputy Collector, Hazaribagh, with the powers of a Superintendent of Survey in the district of Hazaribagh for carrying out the survey under the said Act of all the lands within the Sarkari Hata Government estate situated in thana Hazaribagh, in the district of Hazaribagh.

Hazaribagh.

No. 1877T.R.—The 12th September 1902.—An application having been filed, under section 18 of Bengal Act II of 1882, for the construction of a sluice between the fifth and sixth miles of the Bazitpur Embankment, in the district of Darbhanga, the Collector of the district, after holding the necessary enquiry into the matter under sections 10 and 18 of the Act, has submitted a report in favour of the proposal, which has received the support of the Commissioner of the Patna Division and of

Darbhanga.

the Board of Revenue, by whom it has been submitted to Government for orders. The Lieutenant-Governor, having considered the report and the Board's recommendation of the project, is pleased to order, under section 14 of the Act, that the sluice shall be constructed at an estimated cost of Rs. 20,919, in accordance with the plans prepared by the Executive Engineer, Gandak Division, and approved by the Chief Engineer, Irrigation Department, Bengal.

Muzaffarpur.

No. 1892T.R.—The 13th September 1902.—Under the powers vested in him by section 61 of the Bengal Embankment Act, 1882, and in supersession of Government Notification No. 2031L.R, dated the 12th April 1900, published at page 372, Part I of the *Calcutta Gazette* of the 18th idem, the Lieutenant-Governor directs that in the district of Muzaffarpur the 12th of January of each year shall be the day on which the amount charged to, or apportioned on, estates or tenures, respectively, under the said Act in respect of the Gandak and Turki Embankments shall be payable.

2. When payment is not made on or before the date mentioned above, interest shall be charged at the rate of 5 per cent. per annum from that date until payment.

3. In respect of the Daudpur Embankment in this district, the days on which instalments of the amount charged to, or apportioned on, estates or tenures, respectively, under the said Act shall be payable, will continue to be the 7th June, 28th September, 12th January and 28th March, as ordered in the Notification dated 8th September 1884, which continues to be in force so far as regards this embankment.

Shahabad.

No. 1907T.R.—The 15th September 1902.—Whereas an application has been made by the proprietors in respect of the 12 annas 3 pies share of estate Barupur, tauzi No. 6798, pargana Chausa, in the district of Shahabad, for a survey and preparation of a record of rights in respect of the estate:

Under the powers conferred upon him by section 101 (2) (*a*) of the Bengal Tenancy Act, VIII of 1885, as amended by Act III (B C.) of 1898, the Lieutenant-Governor of Bengal is pleased to direct that a survey shall be made and a record of rights prepared in respect of all lands included within the boundaries of the aforesaid estate.

The particulars to be recorded in the said survey and record of rights shall be the following, viz.—

(*a*) The name of each tenant or occupant.

(*b*) The class to which each tenant belongs, that is to say, whether he is a tenure-holder, raiyat holding at fixed rates, settled raiyat, occupancy raiyat, non-occupancy raiyat or under-raiyat; and, if he is a tenure-holder, whether he is a permanent tenure-holder or not, and whether his rent is liable to enhancement during the continuance of his tenure.

(*c*) The situation, quantity and one or more of the boundaries of the land held by each tenant or occupier.

(*d*) The name of each tenant's landlord.

(*e*) The money-rent payable at the time the record of rights is being prepared, or if a produce-rent, the fact that a produce-rent is paid.

(*f*) The mode in which that rent has been fixed, whether by contract, by order of a Court, or otherwise.

(*g*) If the rent is a gradually increasing rent, the time at which, and the steps by which, it increases.

(*h*) The special conditions and incidents, if any, of the tenancy.

(*i*) If the land is claimed to be held rent-free, whether or not rent is actually paid, and if not paid, whether or not the occupant is entitled to hold the land without payment of rent, and, if so entitled, under what authority.

(*j*) The name of each proprietor, with the character and extent of his interest, and the situation, quantity, and one or more of the boundaries of the proprietor's private lands, as defined in Chapter XI of the Act.

W. C. MACPHERSON,

Offg. Secy. to the Govt. of Bengal.

GENERAL DEPARTMENT.

NOTIFICATION.

No. 2937.—The 13th September 1902.—In exercise of the power conferred by section 163 of the Assam Labour and Emigration Act, VI of 1901, the Lieutenant-Governor is pleased to issue the following rules in addition to those published under Notification No. 3412, dated the 13th October 1901 :—

To be added to rule 185.

"In the case of those emigrants who object to eat the food prepared for them on board, flour, in the prescribed quantity, shall be supplied to them, together with the other articles of uncooked rations (except rice) prescribed in Schedule B, and every facility shall be afforded them to cook their own food. Should they, however, prefer it, they may be supplied with *chura* and *gur* or *suttoo* according to choice."

To be added as a foot-note to Schedule B.

"*Chura* and *gur* or *suttoo* may be supplied to such of the emigrants as ask for this diet in preference to eating the food prepared on board or to cooking food for themselves."

To be added as rule 177(a) after rule 177.

"It shall be the duty of the Steamer Companies to adopt such measures as may be considered necessary for preventing the sale of unwholesome food to emigrants at the steamer ghats."

W. C. MACPHERSON,
Offg. Secy. to the Govt. of Bengal.

FINANCIAL DEPARTMENT.

NOTIFICATIONS.

No. 1428T.F.—The 9th September 1902.—Mr. C. F. Manson, Superintendent of Stamps and Stationery, Calcutta, having returned on the forenoon of the 28th August 1902 from the leave granted to him under Notification No. 3793Mis, dated the 5th August 1902, the unexpired portion of the leave is cancelled.

Calcutta

No. 1488T.F.—The 13th September 1902.—From the forenoon of the 11th to the forenoon of the 28th August 1902, Mr. S. S. Cooper, Assistant Superintendent of Stamps and Stationery, Calcutta, officiated as Superintendent of Stamps and Stationery, Calcutta, in addition to his other duties.

Calcutta.

E. W. COLLIN,
Offg. Secy. to the Govt. of Bengal.

MEDICAL DEPARTMENT.

NOTIFICATION.

No. 673T.P.—The 12th September 1902.—The following notification issued by the Government of Madras, prohibiting pilgrimage from certain plague-infected parts to the *Brahmotsavam* festival at Tirumalai, near Tirupati, in the North Arcot district, is republished for general information.

E. W. COLLIN,
Offg. Secy to the Govt. of Bengal

NOTIFICATION—By the Government of Madras.

WHEREAS His Excellency the Governor in Council is satisfied that there is danger of an outbreak of plague at Tirumalai, near Tirupati, in the North Arcot district, if persons from the Salem, Coimbatore, Bellary, Anantapur, and South Canara districts, the Mysore State,

the Bombay Presidency, Bengal, the Punjab and the United Provinces of Agra and Oudh and other parts declared to be infected with plague are permitted to visit that place on the occasion of the ensuing *Brahmotsavam* festival :

In exercise of the powers delegated to him under the Epidemic Diseases Act, 1897, His Excellency in Council prohibits the attendance at the said festival from the 25th September to 11th October 1902 inclusive of persons from the said parts.

All persons proceeding to the festival in contravention of this notification will be turned back.

JUDICIAL DEPARTMENT.

No. 4073A.

APPOINTMENTS AND TRANSFERS.

No. 2460A.D.—The 10th September 1902.—Babu Purna Chundra Banerji, Subordinate Judge, Patna, is appointed to be Subordinate Judge, Rangpur, and is vested with the powers of a Judge of a Court of Small Causes for the trial of suits cognizable by such a Court up to the value of Rs. 500, within the local limits of the Sadar Munsifi of Rangpur. He is also vested with the functions of a District Court, under section 26, sub-section (1), of Act VII of 1889, within the local limits of the district of Rangpur.

Patna.
Rangpur.

No. 2462A.D.—The 10th September 1902.—Babu Aswini Kumar Guha, Subordinate Judge, Rangpur, is appointed to be Subordinate Judge, Patna, and is vested with the powers of a Judge of a Court of Small Causes for the trial of suits cognizable by such a Court up to the value of Rs. 500, within the local limits of the thanas comprising the Sadar Munsifi of Bankipore, exclusive of the area over which the Cantonment Magistrate of Dinapore has jurisdiction.

Rangpur.
Patna.

No. 2464A.D.—The 10th September 1902.—Babu Jogendra Nath Mitra, Officiating Additional Subordinate Judge, 24-Parganas, is appointed to be Subordinate Judge of Rajshahi, *vice* Babu Koylash Chunder Mozumdar, about to retire, and is vested with the powers of a Judge of a Court of Small Causes for the trial of suits cognizable by such a Court up to the value of Rs. 500, within the local limits of the Rampur Boalia Munsifi.

24-Parganas.
Rajshahi.

No. 2522A.D.—The 12th September 1902.—Maulvi Abdul Khalique, B.L., is appointed to act, until further orders, as an Additional Munsif in the district of Cuttack, but to be on deputation at the Sadar station.

Cuttack.

No. 2570A.D.—The 13th September 1902.—Babu Jogendra Chunder Maulik, Subordinate Judge, under orders of transfer to Rangpur, is appointed to be Subordinate Judge of Pabna and Bogra, *vice* Babu Jogendra Nath Roy, deceased, and is vested with the powers of a Judge of a Court of Small Causes for the trial of suits cognizable by such a Court up to the value of Rs. 500, within the local limits of the Sadar Munsifi of Pabna. He is also appointed to perform the functions of a Court, under section 3, clause (*d*), of the Land Acquisition Act, I of 1894, within the local limits of the district of Pabna and Bogra.

Rangpur.
Pabna and Bogra.

No. 2572A.D.—The 13th September 1902.—The order of the 18th August 1902, appointing Babu Aswini Kumar Guha, Subordinate Judge, Rangpur, to be Subordinate Judge, Shahabad, is cancelled.

Rangpur.
Shahabad.

No. 2592A.D.—The 15th September 1902.—Babu Rajendra Nath Datta, Munsif of Burdwan, is appointed to act as Subordinate Judge of Burdwan, during the absence, on leave, of Babu Mati Lal Sinha, or until further orders.

Burdwan.

No. 2594A.D.—The 15th September 1902.—Babu Basanta Kumar Pal, M.A., B.L., is appointed to act as a Munsif in the district of Burdwan, to be ordinarily stationed at the Sadar station, during the absence, on deputation, of Babu Rajendra Nath Datta, or until further orders.

Burdwan.

No. 2537J.D.—The 13th September 1902.—Babu Joy Gopal Mukerjee is re-appointed to be an Honorary Magistrate of the Independent Bench at Debiganj, in the district of Jalpaiguri.

Jalpaiguri.

LEAVE.

No. 4071A.—The 8th September 1902.—Babu Surjo Narain Dass, Munsif of Barasat, in the district of the 24-Parganas, is allowed leave for twenty-one days, under article 306 (*b*) of the Civil Service Regulations, in extension of that granted to him under the order of the 16th August 1902.

24-Parganas.

The 8th September 1902.—Babu Baidya Nath Ghuttack, Munsif, under orders of transfer to Fenny, in the district of Noakhali, is allowed leave for one week, under article 306 (*b*) of the Civil Service Regulations, in extension of that granted to him under the order of the 28th July 1902.

Noakhali.

The 8th September 1902.—Babu Shama Charan Ukil, Munsif of Bogra, in the district of Pabna and Bogra, is allowed leave for seven days, under article 306 (*b*) of the Civil Service Regulations, in extension of that granted to him under the order of the 8th August 1902.

Pabna and Bogra.

No. 2453A.D.—The 9th September 1902.—Babu Jadupati Banerji, Subordinate Judge of Midnapore, is allowed leave for one month, under article 370 of the Civil Service Regulations, with effect from the date on which he availed himself of it.

Midnapore

RESIGNATION.

No. 2539J.D.—The 13th September 1902.—The Lieutenant-Governor accepts the resignation tendered by Babu Nrisingha Charan Nandy of his appointment as an Honorary Magistrate of the Kalna Independent Bench, in the district of Burdwan.

Burdwan.

POWERS.

No. 2456A.D.—The 9th September 1902.—In exercise of the power conferred by sub-section (1) of section 565 of the Code of Criminal Procedure, 1898, the Lieutenant-Governor is pleased to empower the following Magistrate of the first class in the district of Darjeeling, viz., Babu Ashutosh Bagchi, to order, at the time of passing sentence of imprisonment on any person referred to in that sub-section, that the residence or change of residence of such person after release shall be notified as provided by the rules made under sub-section (3) of the said section.

Darjeeling.

Babu Ashutosh Bagchi is also vested with powers under sections 133 and 143 of the Code of Criminal Procedure.

No. 2485A.D.—The 11th September 1902.—In exercise of the power conferred by sub-section (1) of section 565 of the Code of Criminal Procedure, 1898, the Lieutenant-Governor is pleased to empower the following Magistrates of the first class in the district of the 24-Parganas, viz., Mr. A. P. Muddiman and Maulvi Bazlul Karim, to order, at the time of passing sentence of imprisonment on any person referred to in that sub-section, that the residence or change of residence of such person after release shall be notified as provided by the rules made under sub-section (3) of the said section.

24 Parganas.

No. 2513A.D.—The 12th September 1902.—In exercise of the power conferred by sub-section (1) of section 565 of the Code of Criminal Procedure, 1898, the Lieutenant-Governor is pleased to empower the following Magistrate of the first class in the district of Backergunge, viz , Babu Koylash Govindo Das, to order, at the time of passing sentence of imprisonment on any person referred to in that sub-section, that the residence or change of residence of such person after release shall be notified as provided by the rules made under sub-section (3) of the said section.

Backergunge.

Babu Koylash Govindo Das is also vested with powers under sections 186, 190 (1) (*c*) and 524 of the Code of Criminal Procedure.

No. 2516A.D.—The 12th September 1902.—Babu Hari Nath Ray, Munsif of Aurangabad, in the district of Gaya, is vested with the powers of a Judge of a Court of Small Causes for the trial of suits cognizable by such a Court up to the value of Rs. 100, and with the functions of a District Court, under section 26, sub-section (1), of Act VII of 1889, within the local limits of the Aurangabad Munsifi.

Gaya.

No. 2542A.D.—The 12th September 1902.—Babu Surendra Nath Mozoomdar, Deputy Magistrate, Dinajpur, is vested with powers under sections 110 and 133 of the Code of Criminal Procedure.

Dinajpur.

No. 2476J.D.—The 9th September 1902.—Under the authority vested in him by section 357, sub-section (2) of the Code of Criminal Procedure, Act V of 1898, the Lieutenant-Governor empowers Babu Radha Madhab Bose, Honorary Magistrate of the Independent Bench at Rampur Hât, in the district of Birbhum, to take down evidence in criminal cases in the English language.

Birbhum.

No. 2538J.D.—The 13th September 1902.—Babu Joy Gopal Mukerjee, who has been re-appointed to be an Honorary Magistrate of the Independent Bench at Debiganj, in the district of Jalpaiguri, is vested with the powers of a Magistrate of the third class.

Jalpaiguri.

C. E. BUCKLAND,

Chief Secy. to the Govt. of Bengal.

NOTIFICATION.

[Third Publication.]

No. 3981J.—The 9th August 1902.—In exercise of the powers conferred by section 2 of Bengal Act II of 1867 (*an Act to provide for the punishment of public gambling and the keeping of common gaming-houses in the territories subject to the Lieutenant-Governor of Bengal*), the Lieutenant-Governor is pleased to extend all the sections of that Act to the Khulna Municipality, with effect from the 1st October 1902.

Khulna.

C. E. BUCKLAND,

Chief Secy. to the Govt. of Bengal.

SUBORDINATE CIVIL SERVICE.

No. 4074A.

No. 2488A.D.—The 11th September 1902.—Babu Ram Pada Chatterjee, substantive *pro tempore* Sub-Deputy Collector, Rajshahi Division, is posted to the head-quarters station of the Rangpur district.

Rangpur.

No. 2586A.D.—The 15th September 1902.—Babu Baij Nath Sahai (No. II), substantive *pro tempore* Sub-Deputy Collector, Gaya, is transferred to the Siwan subdivision of the district of Saran.

Gaya.
Saran.

No 2588A.D.—The 15th September 1902.—Babu Tarini Prosad Varma, substantive *pro tempore* Sub-Deputy Collector, Siwan, Saran, is transferred to the head-quarters station of the district of Gaya.

Saran.
Gaya.

C. E. BUCKLAND,

Chief Secy. to the Govt. of Bengal.

REGISTRATION DEPARTMENT.

No. 2598A.D.—The 15th September 1902.—Maulvi Mohammed Mohamad is appointed to act as Rural Sub-Registrar of Bamni, in the district of Noakhali, with effect from the 28th July 1902, during the absence, on deputation, of Maulvi Abdul Halim, or until further orders.

Noakhali.

C. E. BUCKLAND,

Chief Secy. to the Govt. of Bengal.

PUBLIC WORKS DEPARTMENT.

ESTABLISHMENT.

The 16th September 1902.

No. 190.—Babu Bhavani Prasada, Sub-Deputy Collector, Revenue Division, Sone Canals, is granted privilege leave for one month, under article 291 of the Civil Service Regulations, with effect from the 8th September 1902, or such subsequent date as he availed himself of it.

D. B. HORN,

Secy. to the Govt. of Bengal.

COMMUNICATIONS.

The 16th September 1902.

No. 191C.—Declaration.—Whereas it appears to the Lieutenant-Governor of Bengal that land is required to be taken by Government at the public expense for a public purpose, viz., for the due maintenance of a portion of the 46th mile of the Barakar-Purulia Road in mauza

Purulia, Manbhum district, it is hereby declared that for the above purpose four strips of land, measuring in all about 1 bigha 1 cottah $5\frac{14}{16}$ chitaks, with boundaries mentioned below and as shown on the map prepared by the District Engineer of Manbhum, are required within the aforesaid mauza of Purulia, pargana Charrah :—

SPECIFICATION OF LAND AND BOUNDARIES.

1. A strip of land belonging to Nadiar Chand Banerjee and Gobind Gorain, bounded on the—

North—By rock and culvert No. 114.

South—By rocky land.

East—By the bank of the Purulia-Barakar Road.

West—By Nadiar Chand Banerji's baid and bahal lands and Gobind Gorain's bahal land.

2. A strip of land belonging to Nitai Mandal and Gobind Gorain, bounded on the—

North—By culvert No. 114.

South—By Talukdar Teli's *hât*.

East—By Nitai Mandal's baid land, Gobind Gorain's bahal land, and Sham Mandal and Nitai Mandal's bahal lands.

West—By the bank or slope of the Puruli-Barakar Road.

3. A strip of land belonging to Hari Maghi and Kini Gayan, bounded on the—

North—By the Public Works Department roadside land.

South—By culvert No. 114.

East—By Hari Maghi's bahal land and Kini Gayan's baid land.

West—By the Barakar-Purulia roadside land.

4. A strip of land consisting of the pucca platform and bari land of Munshi Abdul Baset, bounded on the—

North—By a footpath road.

South—By the Public Works Department side.

East—By Munshi Abdul Baset's tiled hut and homestead land.

West—By the Purulia-Barakar roadside land.

This declaration is made, under the provisions of section 6, Act I of 1894, to all whom it may concern.

A plan of the land may be inspected in the office of the District Engineer, Manbhum at Purulia.

W. A. INGLIS,
Offg. Secy. to the Govt. of Bengal.

IRRIGATION DEPARTMENT.

The 16th September 1902.

No. 189.—Notification—With reference to this Department Notification No. 186, dated the 9th September 1902, published at page 1223, Part I of the *Calcutta Gazette* of the 10th idem, it is hereby notified that, under the provisions of section VI of Act V (B.C.) of 1864, His Honour the Lieutenant-Governor of Bengal proposes that the following rates of tolls will be levied at the undermentioned places on the channel connecting the river Madhumati with the river Nobogangа from Telkora to Bordia in the Narail subdivision of the district of Jessore :—

I. Schedule of rates of tolls—

		As.
1.	For empty or laden boat weighing less than 100 maunds ...	1
2.	For each 100 maunds of empty or laden boat	2
3.	For each ratt containing grass, bamboo and wood and measuring 50 feet long and 5 feet broad	4

II. Places where tolls are to be levied—

Tolls for passage through the channel shall be levied near the village of Telkora at the mouth and at the other end of the channel near the village of Bordia and at no other places.

D. B. HORN,
Secy. to the Govt. of Bengal.

RAILWAY DEPARTMENT.

The 15th September 1902.

No. 185R.—Declaration.—Whereas it appears to the Lieutenant-Governor of Bengal that land is required to be taken by Government at the public expense for a public purpose, viz., for low level sidings and for Steamer Company's use at Doulatdia, in the village of Doulatdia, pargana Mamoodpur, zilla Faridpur, it is hereby declared that for the above purpose a strip of land measuring, more or less, 93 bighas 11 cottahs 10 chitaks of standard measurement, temporarily occupied in 1899, bounded on the north by the river Ganges, on the west by the land belonging to Eastern Bengal State Railway, and on the south and the east by the village of Doulatdia, is required within the aforesaid village of Doulatdia.

Mines of coal, iron-stone, slate or other minerals lying under the land, except only such parts of the mines and minerals as it may be necessary to dig or carry away or use in the construction of the work for the purpose of which the land is being acquired, are not needed.

This declaration is made, under the provisions of section 6, Act I of 1894, and section 3, clause (1), Act XVIII of 1885, to all whom it may concern.

A plan of the land is available for inspection in the office of the Executive Engineer, Rajbari District, Eastern Bengal State Railway.

No. 186R.—Declaration.—Whereas it appears to the Lieutenant-Governor of Bengal that land is required to be taken by Government at the public expense for a public purpose, viz., for khal diversion at mile 22 of the Laksam-Noakhali Branch of the Assam-Bengal Railway, in the village of Ganipur, pargana Amarabad, zilla Noakhali, it is hereby declared that for the above purpose a piece of land measuring, more or less, 3 bighas 6 cottahs 8 chitaks of standard measurement, bounded on the north by jote land of Prasanno Kumar Sha and others, on the south by Chanmohani khal, on the east by jote land of Prasanno Kumar Sha and others, and on the west by Railway land, is required within the aforesaid village of Ganipur.

This declaration is made, under the provisions of section 6 of Act I of 1894, to all whom it may concern.

A plan of the land may be inspected in the office of the Land Acquisition Deputy Collector, Comilla, Tippera district.

The 16th September 1902.

No. 187R.—Declaration.—Whereas it appears to the Lieutenant-Governor of Bengal that land is required to be taken by Government at the public expense for a public purpose, viz., for an assisted siding to the Toposi Colliery on the Ondal Loop, East Indian Railway, in the village of Kunstore, pargana Sherghur, zilla Burdwan, it is hereby declared that for the above purpose a piece of land measuring, more or less, 2 bighas 15 cottahs 1·11 chitaks of standard measurement (corresponding to 3 roods 25·64 poles), bounded on the north by the waste land of Raneegunge Coal Association, on the south by the East Indian Railway land, on the east by the land of Prosanna Kumar Mukherjee, and on the west by the paddy land of Kanai Mondal, is required within the aforesaid village of Kunstore.

Mines of coal, iron-stone, slate or other minerals lying under the land, except only such parts of the mines and minerals as it may be necessary to dig or carry away, or use in the construction of the work for the purpose of which the land is being acquired, are not needed.

This declaration is made, under the provisions of section 6, Act I of 1894, and section 3, clause (1), Act XVIII of 1885, to all whom it may concern.

A plan of the land may be inspected in the office of the District Engineer, East Indian Railway, Asansol.

No. 188R.—Declaration.—Whereas it appears to the Lieutenant-Governor of Bengal that land is required to be taken by Government at the public expense for a public purpose viz, for Midnapore Jherriah extension of the Bengal-Nagpur, Railway, in the village of Govindpur, zilla Manbhum, it is hereby declared that for the above purpose a piece of land measuring, more or less, 14 acres 3 roods 19¼ poles, being equivalent to 44 bighas 19 cottahs 7 chitaks of standard measurement, is required within the aforesaid village of Gobindpur.

Mines of coal, iron-stone, slate or other minerals lying under the land, except only such parts of the mines or minerals as it may be necessary to dig or carry away or use in the construction of the works for the purpose of which the land is being acquired, are not needed.

This declaration is made, under the provisions of section 6 of Act I of 1894, and section 3, clause (1) of Act XVIII of 1885, to all whom it may concern.

A plan of the land may be seen in the office of the District Engineer, Adra district, Bengal-Nagpur Railway, at Adra.

No. 189R.—Declaration.—Whereas it appears to the Lieutenant-Governor of Bengal that land is required to be taken by Government at the public expense for a public purpose, viz., for pumping station at mile 21, on the Hajipur-Katihar Extension, Tirhut State Railway, in mauza Hassanpur, pargana Saraisa, zilla Darbhanga, it is hereby declared that for the above

purpose a piece of land measuring, more or less, 0 276 acre of standard measurement, bounded as follows, is required within the aforesaid village of Hassanpur :—

North.—Zirat of Patori factory and land of Bengal and North-Western Railway.
South.—Kast of Hira Mahto.
East.— } Bya River.
West.— }

This declaration is made, under the provisions of section 6 of Act I of 1894, to all whom it may concern.

A plan of the land may be inspected in the office of Deputy Collector, in charge Land Acquisition, Darbhanga.

No. 190R.—Declaration.—Whereas it appears to the Lieutenant-Governor of Bengal that land is required to be taken by Government at the public expense for a public purpose, viz., for an assisted siding to khas colliery at Nawpara of Maharaja M. C. Nundy off Sitarampur-Domohoni Extension, East Indian Railway, in the village of Nawpara, pargana Kanthanagar, zilla Burdwan, it is hereby declared that for the above purpose a piece of land measuring, more or less, 16 cottahs and 10 9 chitaks of standard measurement (corresponding to 1 rood and 3·98 poles), bounded on the north, east and west by the East Indian Railway Company's land, and on the south by the paddy land of Tarok Roy, is required within the aforesaid village of Nawpara.

Mines of coal, iron-stone, slate or other minerals lying under the land, except only such parts of the mines and minerals as it may be necessary to dig or carry away, or use in the construction of the work for the purpose of which the land is being acquired, are not needed.

This declaration is made, under the provisions of section 6 of Act I of 1894, and section 3, clause (1), Act XVIII of 1885, to all whom it may concern.

A plan of the land may be inspected in the office of the District Engineer, East Indian Railway, Asansol.

W. A. INGLIS,
Offg. Secy. to the Govt. of Bengal.

MARINE DEPARTMENT.

The 13th September 1902.

No. 124Marine.—The following Notification No. 2029, dated the 4th September 1902, by the Government of India, relative to the removal of quarantine on arrivals from Yambo, is republished for general information.

D. B. HORN,
Secy. to the Govt. of Bengal.

No. 2029, dated Simla, the 4th September 1902.

NOTIFICATION—By the Government of India, Home Department.

The following telegram is published for general information :—

Telegram dated Therapia, the 29th August 1902.

From—His Britannic Majesty's Ambassador Extraordinary and Plenipotentiary at Constantinople,

To—His Excellency the Viceroy.

Quarantine on arrivals from Yambo removed.

The 15th September 1902.

No. 125Marine.—Mr. R. S. Smyth, Acting Senior Master Pilot, is confirmed in that grade, with effect from the 12th September 1902.

D. B. HORN,
Secy. to the Govt. of Bengal.

The 16th September 1902.

No. 126Marine.—Mr. R. S. M. Curran, Junior Master Pilot, is granted, under Articles 264A and 742 of the Civil Service Regulations, combined leave for one year, of which the first 1 month and 13 days is privilege leave, with effect from the 24th August 1902.

D. B. HORN,
Secy. to the Govt. of Bengal.

MARINE DEPARTMENT.

The 4th September 1902.

No. 122Marine—Under the powers conferred upon him by section 36 of the Indian Steam-ships Act, 1884, and in supersession of the rules sanctioned under notification No. 23Marine, dated the 30th January 1890, the Lieutenant-Governor is pleased, with the previous sanction of the Governor-General in Council, to make the following rules to regulate the granting of certificates of competency to Engineers of seagoing steam-ships.

D. B. HORN,
Secy. to the Govt. of Bengal.

GENERAL RULES.

Certificates of competency granted to persons who pass requisite examinations.

1. Certificates of competency will be granted to those persons who pass the requisite examinations and otherwise comply with the requisite conditions. For this purpose Examiners have been appointed and arrangements have been made for holding the examinations periodically at the Port of Calcutta. The examinations will be held whenever necessary, or at such other times as the Government may appoint.

Application how to be made.

2. The application for examination is to be made on Form Exn. 3, which must be filled up at the Port Office. The Form Exn. 3 properly filled in, together with the candidate's Indentures of Apprenticeship, testimonials, and discharges, must be lodged with the Port Officer not later than the day before the day of examination. As such testimonials may have to be verified before the candidate can be examined, it is desirable that they should be handed in, together with the Form Exn. 3, as early as possible.

Testimonials; shore service.

3. All candidates will be required to produce, in addition to the official discharge certificates, testimonials as to their workshop service and as to their service at sea. The testimonials as to workshop service must be signed by the employer and must testify to the candidate's conduct and ability, and state what kind of work he was engaged on (*e.g.*, fitting, erecting, etc.), and for how long.

Testimonials; sea service.

4. Testimonials as to service at sea must testify to the applicant's sobriety, experience, ability, and general good conduct for at least the last twelve months' service at sea preceding the date of application to be examined. They must be signed by the Master and Chief Engineer (or in the case of testimonials to Chief Engineers, by the Master and Superintending Engineer) and must clearly state whether the applicant was on regular watch, and in regular charge of a watch on the main engines or boilers. It is desirable that testimonials of candidates should be endorsed by the Superintending Engineer. No time spent in clerical work will be allowed to count.

Further as to testimonials.

5. In cases where a testimonial from the Chief Engineer, or from the Master, is for any sufficient reason not obtainable, one may be submitted from the Superintending Engineer in place of that of the Chief Engineer, and one from the Managing Owner or Secretary or Chairman of a large Company in place of that of the Master, but in every such instance the testimonial must declare that the facts stated are in accordance with the reports made by the Chief Engineer or the Master, as the case may be, or else that the facts are within the writer's personal knowledge.

Physical defects.

6. When a candidate is observed to be hard of hearing, or is labouring under any other obvious physical defect, the signatories of his testimonials are required to mention that defect specifically, and to state whether it in any way interfered with the efficiency of the candidate as an engineer on watch. When these modified testimonials are such as to completely satisfy the examiner that the defect is not such as to interfere with the efficient discharge of the applicant's duties as engineer, the examination is proceeded with; otherwise the case is referred to the Government. Candidates afflicted with nervous impediment in speech may write their answers to *viva voce* questions.

Testimonials of Foreigners.

7. The testimonials of service of Foreign Engineers and of British Engineers serving in foreign vessels which cannot be verified by the Port Officer must be confirmed either by the Consul of the country to which the ship in which the candidate served belonged, or by some other recognized official authority of that country; or by the testimony of some credible person on the spot having personal knowledge of the facts required to be established. The production, however, of such proofs will not of necessity be deemed sufficient. Each case must be decided on its own merits; and if the sufficiency of the proofs given appears to be at all doubtful, the point must be referred to the Government.

Certificate as to age.

8. Should any doubt exist as to the age of a candidate, he will be required to produce a Certificate of Birth or Baptism.

9. Foreigners must prove to the satisfaction of the Examiners that they can speak and write the English language sufficiently well to perform the duties required of them on board a British vessel.

Foreigners to know English.

10. Service which cannot be verified by proper entries in the Articles of the Ships in which the candidates have served cannot be counted.

Verification of service, &c., by articles.

11. If the candidate passes he will receive a form (Form Exn. 16) authorising the Port Officer to whom it is addressed to issue the Certificate. The candidate's testimonials and other papers will be returned to him with the Certificate. It is therefore important that the port at which the Certificate is to be issued should be the same on both the Form Exn. 16 and the form of application Exn. 3. If circumstances should make any alteration necessary, the Examiner should see that it is made in both forms; otherwise delay in the issue of the Certificate may be caused.

Issue of certificate.

12. If after a candidate has passed the examination it is discovered on further investigation that his services are insufficient to entitle him to receive a Certificate of the grade for which he has passed, the Certificate will not be granted to him; but if the Port Officer is satisfied that the error in the calculation of the candidate's services did not occur through any fault or wilful misrepresentation on his part, he may either have the fee returned to him or have it placed to his credit. Should his services entitle him to a Certificate of a lower grade, it may be granted to him, and the difference, if any, between the fee paid by him for the superior Certificate and the fee payable for the inferior Certificate will be returned to him or placed to his credit. The Superior Certificate will not be granted until the candidate has performed the amount of service in which he was deficient, and has been re-examined in all the subjects unless the Government see fit to dispense with the re-examination.

Service found to be insufficient.

13. If the candidate fails in practical knowledge he may not present himself for re-examination until he can produce proofs of three months' further service at sea as Engineer from the date of failure. If he fails in arithmetic, elementary questions, or drawing only, he may come up again at any time.

Failure in examination.

14. Candidates for examination, in making their application on the Form Exn. 3, will be required to pay the examination fee before any step is taken towards inquiring into their services or testing their qualifications, &c. If the candidate is found not to be qualified, the fee will either be returned to him or placed to his credit until he is qualified.

Fee must be paid first.

15. The fee for examination must be paid to the Port Officer. In any case in which a candidate offers a gratuity to any other officer, and in any place but in the Port Office, the candidate so offering a gratuity will be regarded as having committed an act of misconduct, and will be rejected, and not allowed to be examined for twelve months.

Payment of fees.

16. If a candidate fails in his examination, *no part of the fee he has paid will be returned to him.*

Fees not returned on failure.

17. The fees are as follows:—

Table of fees.

	Rs.
Second Class Engineer's Certificate	15
First Class Engineer's Certificate	30
First Class Engineer's Certificate if candidate is already in possession of a Second Class Certificate of Competency granted by the Board of Trade, or by the Government of a British possession under section 8 of the Merchant Shipping (Colonial) Act, 1869	15

QUALIFICATIONS REQUIRED FOR THE VARIOUS GRADES.

18. SECOND CLASS ENGINEER.*—A candidate for a Second Class Engineer's Certificate must be not less than 21 years of age;

Second Class.

(*a*) He must have served as an apprentice Engineer for four years in England or five years in India at least, and prove that during the period of his apprenticeship he has been employed on the making or repairing of steam engines, boilers, &c.

* Until January 1st, 1904, candidates may present themselves for examination under the conditions laid down in the old Regulations as follows:—

A candidate for a Second Class Engineer's Certificate must be 21 years of age,

(a) He must have served an apprenticeship to an Engineer for three years in England or five in India at least, and proved that during the period of his apprenticeship he has been employed on the making and repairing of engines, or if he has not served an apprenticeship, he must prove that for not less than three years in England or five in India he has been employed as a journeyman mechanic in some factory or workshop* on the making or repairing of engines.† In either case he must also have served one year at sea in the Engine Room as an Engineer on regular Watch in the Foreign, Home or Coasting Trade‡, or

(b) He must have served at least four years at sea in the Engine Room as an Engineer on regular Watch in the Foreign, Home or Coasting Trade.

* No period of service in a drawing office can be allowed to count for more than six months' workshop time.

† These may be either land or marine engines.

‡ See paragraph 27 as to service in Home or Coasting Trade.

Three years in England or four years in India of the apprentice time must have been passed in the fitting or erecting shops, or in both. In calculating the four years in England or five years in India of artisan service which are to constitute the required apprenticeship, which should not begin at an earlier age than 15, time spent at a technical school (recognised by the Port Officer as suitable) where there is an engineering laboratory, may be taken into account and accepted as equivalent to artisan service at the ratio of three years in the technical school to two in artisan service, provided that the applicant was over 15 years of age, and can produce the Principal's Certificate for regular attendance and satisfactory progress, and provided also that in such case the other portion of the time was spent in the fitting or erecting shops of an engineer, as indicated above.

Journeyman's time will be considered as equivalent to apprenticeship.

Every applicant must produce testimonials of ability as an engineer workman to the satisfaction of the Government.

If the candidate has not served for four years in England or five years in India as an apprentice Engineer, or as Journeyman, he will be required to have served, *in lieu thereof*, four years at sea as Engineer on regular watch on the main engines or boilers of a foreign-going steamer of not less than 66 nominal horse-power, or six years in a home-trade steamer of not less than 66 nominal horse-power.

(*b*) In addition to the apprenticeship as above described, or the alternative sea service, the applicant must have served one year at sea as Engineer on regular watch on the main engines or boilers of a foreign-going steamer of not less than 66 nominal horse-power, or eighteen months in a home-trade steamer of not less than 66 nominal horse-power.

(*c*) He must be able to give a satisfactory description of boilers, and the methods of staying them, together with the use and management of the different valves, cocks, pipes, and connexions.

(*d*) He must understand how to correct defects from accident, decay, &c., and the means of repairing such defects.

(*e*) He must understand the use of the water gauge, pressure gauge, barometer, thermometer, and salinometer, and the principles on which they are constructed.

(*f*) He must state the causes, effects, and usual remedies for incrustation and corrosion.

(*g*) He must be able to explain the method of testing and altering the setting of the slide valves, and method of testing the fairness of shafts and adjusting them.

(*h*) He must be able to calculate the suitable working pressure for a steam boiler of given dimensions, and the stress, per square inch on crank and tunnel shafts when the necessary data are furnished.

(*i*) He must understand the construction of steering engines, evaporators, feed filters, and feed heaters.

(*j*) He must understand the construction of centrifugal, bucket, and plunger pumps, and the principle on which they act.

(*k*) He must be able to state how a temporary or permanent repair could be effected in case of derangement of a part of the machinery, or total breakdown.

(*l*) He must write a legible hand, and have a good knowledge of arithmetic up to and including vulgar and decimal fractions and square and cube root. He must also understand the application of these rules to questions about safety valves, coal consumption, consumption of stores, capacities of tanks, bunkers, &c.

(*m*) He must be able to pass a creditable examination as to the various constructions of paddle and screw engines in general use, as to the details of the different working parts, external and internal, and the use of each part.

First-class.

(*n*) He must possess a creditable knowledge of the prominent facts relating to combustion, heat and stream.

19. FIRST CLASS ENGINEER.—A candidate for a First Class Engineer's Certificate must be not less than 22 years of age.

In addition to the qualification required for a Second Class Engineer,

(*a*) He must:—

(1) have served at sea for 12 months, with a Second Class Certificate of Competency as Senior Engineer in charge of a watch on the main engines or boilers of a foreign-going steam-ship of not less than 99 nominal horse power; or

---

In the case of England, "foreign going steamer" includes every steamer employed in trading or going between some place or places situate beyond the following limits, that is to say, the coasts of the United Kingdom, the Channel Islands and Isle of Man, and the Continent of Europe between the River Elbe and Brest, inclusive. "Home trade steamer" includes every steamer employed in trading or going within the following limits, that is to say, the United Kingdom, the Channel Islands and Isle of Man, and the Continent of Europe between the River Elbe and Brest inclusive.

In the case of India, foreign-going steamer includes every steamer employed in trading between any port of the territories which are or may become vested in His Majesty by the Statutes 21 and 22 Vict., Cap. 106, entitled "An Act for the better government of India," and any port or place not in the said territories, nor on the Continent of India, nor in the Straits Settlements, nor in the Island of Ceylon. "Home-trade steamer" includes every steamer employed in trading between any ports of the said territories or between any port of the said territories and any port or place on the Continent of India or in the Straits Settlements or in the Island of Ceylon.

(2) have served at sea for 18 months, with a Second Class Certificate of Competency, as First Engineer of a home-trade steamer of not less than 99 nominal horse-power; or 2 years as Second Engineer of a home-trade steamer of not less than 99 nominal horse-power, with a Second Class Certificate of Competency.

(*b*) He will be required to make an intelligible hand sketch, or a working drawing of some one or more of the principal parts of a steam engine, and to mark in without a copy all the necessary dimensions in figures, so that the sketch or drawing could be worked from.*

* See Appendix C.

(*c*) He must also be able to take off and calculate indicator diagrams.

(*d*) He must be able to calculate safety-valve pressures, and the strength of the boiler shell, stays, and riveting.

(*e*) He must be able to state the general proportions borne by the principal parts of the machinery to each other, and to calculate the direct stress, the torsional stress, and the bending stress in round bars, and the direct stress and the bending stress in rectangular bars with given loads.

(*f*) He must be able to explain the method of testing and altering the setting of the slide valves, and to sketch about what difference any alteration in the slide valve will make in the indicator diagram, and also the method of testing the fairness of shafts and of adjusting them.

(*g*) He must be conversant with surface condensation, superheating, and the working of steam expansively.

(*h*) His knowledge of arithmetic must include the mensuration of superficies and solids and the extraction of the square root, and the application of these rules to questions relating to the power, duty and economy of engines and boilers, and to the stresses in rods, shafts, and levers of the engine.

(*i*) He must understand the construction of, and be able to maintain in working condition the auxiliary machinery which is placed under his charge, viz., refrigerating machinery, electric light engines, and dynamos, electric motors fitted to ships' boats, hydraulic machinery, and the various descriptions of steering engines, etc.

Workshop service where engines are not made.

20. When the workshop service has been performed in a place where steam-engines are not made or repaired, and the class of work done is similar to that required in engine making, the service may be accepted with an additional year in the engine-room; that is, fours years in England or five years in India of workshop service and two years in the engine-room, of which one year must have been at sea. The approval of the Port Officer must be obtained in every such case before the candidate is examined.

Workshop service other than fitting or erecting.

21. When the workshop service has been performed in a place where engines are made, and the department in which the applicant has been principally engaged is not "fitting" or "erecting," the case must be referred to the Government with a report upon the service performed. If the service be such as is useful training for an Engineer, the Port Officer may accept the service, but in every such case the applicant must prove additional engine-room service as required above.

Qualifying service defined.

22. In the case of candidates for First Class Certificates, qualifying service means service on regular watch as Senior Engineer in charge of the main engines or boilers. During the whole of the period claimed, candidates must have been in possession of Second Class Certificates.

In the case of candidates for Second Class Certificates, qualifying service means service as Engineer on regular watch on the main engines or boilers. In no case will time spent in clerical work be allowed to count.

Names on articles.

23. In all cases the candidates' names must have been duly entered on the ship's Articles as Engineers in their proper ratings.

Regular watch.

24. Being on regular watch means being on watch for at least eight hours a day.

Further as to qualifying service.

25. Only such service as gives the experience required to make a man thoroughly competent as a sea-going Engineer is accepted as qualifying service. Even for a Second Class Certificate the candidate must prove to the satisfaction of the Examiner that he is qualified by experience and knowledge to act as Chief Engineer in an under-powered steamer of 99 nominal horse-power on a voyage, say, India to Egypt, taking full responsibility for engines and boiler.

Sea service.

26. The sea-service required by these Regulations is, unless otherwise stated, service performed in foreign-going ships.

Home-trade service.

27. Service in the Home or Coasting Trade is regarded as being equivalent to two-thirds of the same period of time served in the Foreign Trade, except in the case of Indian Coasting Voyages extending beyond a distance of 500 miles from the port of departure in steam-ships commanded

by Masters holding Foreign-going Certificates, when such service will count as foreign voyages, and will be reckoned as full time; but the time spent in the port of departure or Home Port will not be allowed to count. In all cases the length of service is deemed to commence on the date of sailing from the port of departure or Home Port and to end on the date of arrival at the Home Port. Such service must be vouched for in the form laid down in Appendix G.

Lake or river service.

28. Service as watch-keeper on a lake or river steamer of not less than 66 nominal horse-power may be accepted under the following conditions:—

(1) the service will only count half as much as sea service, *i.e.*, every two months of lake or river service is only equivalent to one month's sea service;

(2) candidates for second class certificates must prove, in addition to the lake or river service, at least three months' qualifying service at sea in a steam-ship of not less than 66 nominal horse-power;

(3) candidates for first class certificates must prove, in addition to lake or river service in vessels of 99 nominal horse-power, at least six months' qualifying service at sea, with a Second Class Engineer's Certificate, in vessels of not less than 99 nominal horse-power.

Service in auxiliary screw steam-ships.

29. Service performed on board auxiliary screw whalers and other vessels with auxiliary steam power of not less than 66 nominal horse-power in the capacity of Engineer may be allowed to count towards qualifying candidates for examination for Second Class Engineers' Certificates of Competency to the extent of one-half the time the vessel is actually at sea. If the candidate is able to prove a larger amount of time under steam, he will be allowed to count the whole of such extended time.

Service in pilot boats.

30. Service performed in pilot vessels will not qualify a candidate for examination.

Service in dredgers, trawlers or tug-boats.

31. Service in sea-going steam dredgers, trawlers, or tug-boats may be accepted under the following conditions:—Two months of such service is only equivalent to one month's qualifying service. Candidates for Second Class Certificates may perform all their sea service in sea-going steam dredgers, trawlers, or tug-boats, but they must have been on regular watch on the main engines or boilers, and the vessels must not be less than 66 nominal horse-power. Candidates for First Class Certificates must have served in vessels of at least 99 nominal horse-power, and have been in charge of a watch on the main engines or boilers. They must, in addition, have served in a qualifying capacity for at least six months in a foreign-going cargo or passenger steam-ship, or nine months in a home-trade cargo or passenger steam-ship.

Service in yachts.

32. Service performed in steam yachts, either within or beyond home-trade limits, may be accepted as equivalent to two-thirds of the time performed in foreign-going trading vessels, provided that the candidate's name is entered on the vessel's Articles and that he can prove, to the satisfaction of the Port Officer, that the time claimed was actually served at sea.

Candidates for Second Class Certificates may perform all their service in yachts, but the candidate must have been on regular watch on the main engines or boilers, and the vessel must be of not less than 66 nominal horse-power.

Candidates for First Class Certificates must have served on vessels of not less than 99 nominal horse-power, and must have been in regular charge of the main engines or boilers. In addition they must have served for at least three months in a qualifying capacity on board a foreign-going trading or passenger steam-ship. This additional service will, however, not be required in the case of a candidate who have served for 18 months as first engineer, or for 2 years as second engineer, of a steam yacht of the requisite power.

First class Certificates without Second.

33. The Government may see fit to allow an applicant who, in consequence of service abroad, has been unable to obtain a Second Class Certificate, to be examined for a First Class Certificate, although he has not obtained a Certificate of the lower grade, provided he is able to satisfy them as to the satisfactory character of his services. If any candidate who has not got a Second Class Certificate of Competency fails to pass the examination for the First Class Certificate, but passes that for the lower grade, he may be given a Second Class Certificate of Competency, but no part of the fee will be returned. A candidate who has been permitted to be examined for a First Class Certificate without first obtaining a Second Class Certificate of Competency, and who fails in his examination in practical knowledge, may not be re-examined for a Certificate of the higher grade until he has served 3 months as watch-keeper with a Second Class Engineer's Certificate of Competency as required by the regulations. If the candidate fails altogether, *i.e.*, both in the examination for the lower as well as for the higher grade of Certificate, he may be re-examined for a Second Class Certificate only, subject to the usual regulations relating to failure.

Masters and Mates' Examination in steam.

34. Particulars of the examination of Masters and Mates in steam will be found in Appendix E.

CONDUCT OF THE EXAMINATIONS.

Commencement and duration of Examinations.

35. The examinations will commence early in the forenoon, and will be continued from day to day until all the candidates whose names appear upon the Examiner's list on the day of examination are examined.

Candidates to be punctual

36. Candidates are required to appear at the examination room punctually at the time appointed.

Tables cleared.

37. Before commencing the examination, the tables and desks must be cleared of all scraps of paper or books that are not used in the examination, and care should be taken that the candidates do not bring into the examination room any book or paper.

Strangers not admitted.

38. No persons will be allowed in the rooms during the examinations other than those whose duties require them to be present.

No instructors will be allowed on the premises.

Blotting paper.

39. A sheet of blotting paper will be issued to each candidate with the first examination paper, and it must be returned to the Examiner when the last paper is completed each day. The Examiner will be careful to see that the blotting paper has not been used by the candidate in solving his problems, or for conveying information to other candidates

All work to be shown.

40. No candidate will be allowed to work out his problems on a slate or on waste paper or to write on the blotting paper supplied for his use in the examination. Violation of this rule will subject the candidate to all the penalties of a failure.

Additional sheets of paper will be supplied by the Examiner if required, but they must be attached to, and form part of, the examination papers.

Books and papers strictly forbidden.

41. All books necessary for the use of candidates under examination will be provided by the Government, and candidates are prohibited from bringing into the examination room books or papers of any kind whatever. The slightest infringement of this regulation will subject the offender to all the penalties of a failure, and he will not be allowed to present himself for re-examination for a period of three months.

Instruments are provided.

42. Candidates for First Class Certificates have to pass an examination in rough working drawing, which may, in the candidate's option, be either hand sketches clearly dimensioned and complete in the necessary views and sections, or drawings to a scale. Drawing boards and T squares will be provided by the Government, but the applicants will have to bring with them any drawing instruments they may require.

Candidates' places.

43. Candidates should be so placed as to prevent one copying from another, and no communication whatever between the candidates should be allowed.

Penalty for copying, &c.

44. In the event of any candidate being discovered referring to any book or paper, or copying from another, or affording any assistance or giving any information to another, or communicating in any way with another during the time of examination, or copying any part of the problems for the purpose of taking them out of the examination rooms, he will subject himself to all the penalties of a failure, and will not be allowed to be examined for a period of six months.

Leaving room or building.

45. No candidate may leave the examination room without permission and without giving up the paper on which he is engaged. Under no circumstances will the same paper be returned to him, but the Examiner may substitute other data, or another question.

Injury to books.

46. If a candidate defaces, blots, writes in or otherwise injures any book or form belonging to the Government, his papers will be retained until he has replaced the damaged book or document. He will not be allowed to remove the damaged book or document, and will be subjected to all the penalties of a failure.

Silence.

47. Perfect silence is to be preserved in the examination room.

Penalty for breach of rules.

48. Any candidate violating any of the regulations or being guilty of insolence to the Examiner, or of disorderly or improper conduct in or about the room, will render himself liable to the postponement of his examination, or, in the event of his having passed, to the detention of his Certificate for such period as the Government may direct.

Order of examinations.

49. The examination of candidates for Second Class Certificates consists of three parts: arithmetic, elementary questions, and *viva voce;* and that of candidates for First Class Certificates of four parts: arithmetic, drawing, elementary questions, and *viva voce* (*see* paragraphs 18 and 19).

Arithmetic.

50. When the number of marks obtained in arithmetic amounts to 28, that is, two-thirds of the maximum, the candidate passes in arithmetic.

If the marks obtained amount to 21, but not to 28, and if the applicant has had long sea experience, his testimonials should be taken into account, and his examination continued, if deemed advisable by the Examiner, and he may be passed or failed, having due regard

to his practical knowledge, and to whether he is being examined for second class or first class.

Elementary questions.

51. All engineer applicants presenting themselves for examination will be required to give written answers to ten questions selected from Elementary Questions shown in Appendix B. These questions are intended to furnish a record to some extent of the candidate's knowledge at the time of his examination, and also to induce the candidates to pay more attention to their handwriting and spelling.

Examiners will require all candidates to fill up a form, Exn. 15*b*,* and they will forward it to the Port Officer, together with the report of the examination.

The questions for both classes of engineers will be taken from the same series of Elementary Questions; and candidates for first class certificates are expected to show their superiority by giving answers more complete than those of the other candidates.

Vivâ voce.

52. Having regard to the fact that when the verbal examination is held, the candidate has already passed in arithmetic, and, if a first class candidate, in drawing, and has also written answers to the elementary questions, the Examiners will deal with practical, rather than theoretical, questions in this division of the examination; and no candidate should be failed without having been well cross-questioned on the points for which failure takes place.

The elementary questions to be answered on Form Exn. 15*b** are good starting points in *vivâ voce* examinations. With the candidates' written answers before the Examiner, the same question can be put in a way requiring an answer in another form. Each question may be developed into several according to the circumstances of the case, *e g.*—

1. What is made of? Of what parts does it consist?
2. What is its use?
3. What attention does it require at sea?
4. What attention does it require in port?
5. When it becomes defective, what is it that principally goes wrong with it?
6. How is it repaired?
7. What alteration may prevent a recurrence of the defect?

It is considered of great importance that engineers presenting themselves for examination should have an extensive knowledge of the particulars of actual casualties which have occurred at sea, and be able to state how these might have been prevented, and how remedied. Sometimes an engineer presents himself who has had no personal experience of any defects, and who can tell nothing about casualties to machinery which have occurred in the experience of others: such candidates should be closely questioned as to their knowledge of boiler and engine construction and the repairs of same.

The management of engines and boilers at sea, the duties of the engineer on watch, the work to be done to the engines, boilers, and auxiliary machinery in port, and the periodical examinations of the working parts, form part of the *vivâ voce* examination.

Reports of examinations.

53. Reports of examinations on the form Exn. 15, together with the Examination Papers, should be forwarded to the Port Officer immediately the examinations are completed.

GENERAL.

54. Certificates of Competency shall be made and issued by the Government in the forms hereunto annexed.

55. Every Certificate of Competency shall be made in duplicate, and one copy shall be delivered to the person entitled to the Certificate, and the other shall be kept and recorded by the Port Officer of Calcutta.

56. No application from the holder of a certificate granted by the Government of any other British Possession or by the Board of Trade to be examined for a certificate of the same legal value shall be entertained.

* *See* Appendix A.

APPENDIX A.

FORM EXN. 15*b*.

Form to be filled up by all Candidates at the commencement of the examination.

Port	Class for which examined
Date	Candidate's name

A. Where and how long did you serve in works at the making or repairing of engines and boilers?

B. How long and in what capacity did you serve in works on shore other than at the making or repairing of engines and boilers?

C. How long have you served in the engine-room at sea, and in what capacities?

D. With what descriptions of engines have you served at sea? What sizes were the engines?

E. With what descriptions of boilers have you served at sea?

F. What engine defects or defects to auxiliary machinery have come under your notice, what caused these defects, and how were they remedied? Give the names of the steamers for verification.

G. What boiler defects have come under your notice, what caused these defects, and how were they remedied? Give the names of the steamers for verification.

APPENDIX B.

ELEMENTRY QUESTIONS.

1.

What parts of an engine are generally made of wrought iron?

2.

What parts of an engine are generally made of cast iron?

3.

For what parts of an engine is steel sometimes used?

4.

What parts of an engine are generally made of brass or gun-metal?

5.

Where is "white metal" sometimes used? On account of what property possessed by it is it adopted? What objection is there to its more general use?

6.

For what parts is Muntz metal sometimes used? Is it malleable? For what properties is it valued?

7.

What difference is there in the composition of cast iron, of wrought iron, and of steel?

8.

How can cast iron, wrought iron, and steel be distinguished from each other?

9.

What are the different properties of cast iron, of wrought iron, and of steel?

10.

What is meant by the terms "breaking stress," "proof stress," "safe working stress"

11.

What is the cohesive strength, or breaking stress, of good ordinary wrought iron?

12.

Tempering steel: how is it done, and in what order do the colours come?

13.

What is case-hardening?

14.

Which of the common metals or alloys can be forged, and which of them are brittle or "short"?

15.

What is meant by "welding"? Which of the common metals can be welded?

16.

The expansion of metals by heat; give examples of this in the engine and in the boiler.

17.

In the construction of steel cylindrical marine boilers for what parts have the plates to be worked hot? What precautionary treatment of these plates is afterwards necessary?

18.

In what parts of cylindrical marine boilers is the strongest riveting employed? In which of the shell seams is it most necessary?

19.

What is "caulking," and how are seams prepared for caulking?

20.

Describe the different ways of fastening the ends of the main stays of a boiler. What are the merits of, or objections to the different plans?

21.

What stress per square inch is allowed on boiler stays?

22.

Describe a riveted stay, and state where such stays are commonly used.

23.

Where are thin plates to be looked for in a boiler as it wears, and how is the thinness to be detected?

24.

How are boiler tubes fixed? What are "stay tubes," and how are they secured?

25.

Where is it generally that boiler tubes leak? How is this defect repaired? What are the causes of this leaking?

26.

What are the causes of cracked tube plates? Where are the cracks situated? How are they repaired?

27.

What is the difference between a "dry uptake" and a "wet uptake"? Which requires most repair? Why? Where have you seen a wet uptake?

28.

What is a superheater? What is its construction? What valves are on it? There is sometimes a gauge glass on it; what is that for? Are superheaters now in general use?

29.

What parts of a marine multitubular boiler are first injured by shortness of water?

30.

Where are angle irons sometimes used in the construction of a boiler, and where are flanged plates used?

31.

Priming; to what causes is it attributed? What means are applied to prevent it? What evils may be produced by it?

32.

Funnel draught; what makes it? What checks it?

33.

Flame sometimes seen at the top of the funnel; what causes this appearance? Is it beneficial or is it detrimental? Why so?

34.

A blast pipe; what is its construction? Where is it placed? For what is it used?

35.

How many bottom blow-off cocks are generally fitted to each boiler, and why are they so fitted?

36.

Blow-off cocks are sometimes fitted with a spanner guard? For what purpose is this? Describe how the guard is formed.

37.

Water-gauge test-cocks; where are they placed? At what heights? Must the cocks themselves be at those heights? What provision is made for cleaning these cocks, should they ever become choked? When there are no test cocks, how is the height of the water ascertained?

38.

What is a dead-weight safety valve? Of what are the rubbing surfaces formed? How is a lock-up valve arranged to admit of lifting it or of turning it round, and to prevent adding to the weight?

39.

About what area of safety valve is now required by the Board of Trade? What is the effect of suddenly opening a safety valve when steam is up? To about what extent do safety valves rise when blowing off without being eased by hand?

40.

Spring-loaded safety valves; what advantages have they that are not possessed by dead-weight valves? What are the disadvantages, if any, as compared with dead-weight valves?

41.

Of what pieces does a glass water gauge mounting consist? How does it act? Where is it placed? At what height? Is it liable to derangement? How is its working tested?

42.

Glass water gauges have sometimes pipe connections top and bottom; what is the object of this arrangement? Should there be cocks at the extremities of these pipes? Why? or why not?

43.

Describe a Bourdon steam gauge. Some gauges have an inverted syphon pipe below them; what is its use?

44.

Why is a small cock sometimes put on the pipe leading to a steam gauge? Where should it be placed, and what error might be made by omitting to use it?

45.

Do steam gauges indicate the total pressure of the steam, or only a portion of that pressure? What is the pressure measured from?

46.

What is meant by the salting of the boiler? How is this prevented? What is the density of ordinary sea water? How is the density ascertained? What is the difference between the formation of scale and the salting of the boiler? What is the maximum density at which boilers should be worked at sea? In the event of condenser tubes leaking, what is the minimum density at which boilers should be worked? Give your reasons.

47.

Scum cocks and pipes; how are they arranged? Where are they placed? At what height in the boiler? When are they used? When must they be shut? Neglect of these cocks lead to what dangers?

48.

Scale; of what does it consist? Where is it most objectionable? How is it removed? How is its formation prevented? What evil effects are produced by it?

49.

What is a Salinometer? Of what does it consist? How does it act? How is it graduated? Can it be used at any temperature indiscriminately?

50.

What harm may be done through the check valve of one of a set of boilers being defective while under way? How would you work to avoid this harm?

51.

How is the leak from a split tube stopped in a boiler at sea? Describe the operation.

52.

What is the use of dampers? Where are they fitted? When should they be used?

53.

When there are no dampers fitted, what is used instead? What evil to the boiler is sometimes attributed to this? When the heating surfaces are clean, does this occur?

54.

Describe the piston of a steam cylinder, with its different rings and their uses. There are generally round pieces let in flush on one side of a piston; what are they? How are these pieces fixed?

55.

Cylinder drain cocks; what is their use? There is sometimes a valve upon each cock; what purpose does it serve?

56.

Cylinder escape valves; of what do they consist? How protected? How regulated? When are they most needed? To what danger do they expose the engineer? What precaution is sometimes used to obviate this danger?

57.

What is a compound engine? What different kinds are there for screw steamers, in respect to the number and arrangement of their cranks and cylinders? What is a triple expansion engine?

58.

What is link motion? What are some of its advantages? In modern engines for the screw propeller, when there is no link motion, what takes its place?

59.

What is a separate expansion valve? Why is it not fitted to all engines? What effect has an expansion valve upon the starting and upon the reversing of the engine?

60.

What arrangement is applied to reduce the friction of a slide valve? To what is the friction due?

61.

Describe a loose eccentric; how does it act? In what engines are the loose eccentrics still employed?

62.

What is the travel of the eccentric rod? How is it measured on the eccentric? What is the travel on the side valve when the link motion is in mid gear, and the engine still moving?

63.

What are "double beat valves"? What objections are there to their use?

64.

What is a circulating pump? Is it always worked by the main engine? Give an example from your last steamer of the three water temperatures generally noted by careful engineers.

65.

An air valve is sometimes fitted to a circulating reciprocating pump; what purpose does it serve?

66.

What is the difference between a bucket air-pump, a piston air-pump, and a plunger air-pump?

67.

Whether are double-acting air-pumps made with plungers, with pistons, or with bucket? Circulating-pumps: describe their construction and action

68.

What is an air-pump trunk? When is it necessary? How is it attached to the bucket? Centrifugal pumps: describe their construction and mode of working.

69.

What class of air-pump requires both foot and delivery valves, and in what other class can either of these valves be in some cases dispensed with?

70.

What are marine governors? What is their general construction? How do they act?

71.

With a surface condenser and a single acting air-pump, what is the effect of a leaky foot valve, and what is the effect of a leaky bucket when there is also a foot valve?

72.

Air-pump pet cock or valve; where is it placed? How does it act? What is its object? Does it in every case reduce the effective capacity of the pump? Is it equally applicable to double-acting pumps?

73.

At what temperature is the hot well worked? What is the effect of higher temperatures? What is the effect of lower temperatures? What limits the lowness of temperature? Has a very low temperature any disadvantages?

74.

Bilge injection with common condensers; what are the fittings required? When is it used? What precautions are necessary in using it?

75.

When surface condensers are used, what takes the place of the bilge injection? To what is the connection made? How is its valve formed? Why is this necessary?

76.

What are the practical guides to the proper amount of opening of the inlet valve for the circulating pump?

77.

Feed-pump pet cock or valve; where is it placed? What is its use? How does it act? Is it always a necessary fitting?

78.

What are some of the ways of fastening the ends of surface condenser tubes? About what size and about what thickness are condenser tubes? What parts of a surface condenser are made of brass?

79

What is a blow-through valve or cock? To what is it attached? There is sometimes a valve that when opened admits steam from the slide valve casing to the exhaust port; what is its use? To which cylinder is it fitted?

80.

What are snifting valves? Why are they generally omitted now?

81.

What connexions are generally fitted to the donkey pump and to what services can it be applied?

82.

When the engines are stopped with steam up, what are to be shut and what are to be opened?

83.

How is an engine heated up before starting? What precautionary examinations are made before starting?

84.

What is an interceptor or catch-water? Where is it fixed, what is its construction, how does it act, and what attention does it require?

85.

Describe an air-pump bucket, with its valve or valves and its packing. Of what are the valves generally made?

86.

Of what materials are air-pump rods made? Why so?

87.

What is the racing of the engine? When does it occur? What danger attaches to it? What is done to prevent it?

88.

When under way, when the air-pump bucket is at the top of its stroke, at what height is the water in the condenser?

89.

What is meant by the "pitch" of a screw propeller? How is it measured?

90.

Explain the difference between a "right hand" and a "left hand" propeller, and state how each of them revolves.

91.

What is the slip of a screw propeller? How is its amount expressed in figures?

92.

Which of the valves about engines and boilers have to be worked by hand, which of them work self-actingly, and which are worked by the motion of the engine?

93.

Why is soda sometimes put into a boiler, and how is it put in when under way? What is the kind of soda used?

94.

Tallow cups for cylinders were sometimes made with two small cocks, or with only one small cock, or with one large hollow plug cock, or with one small cock and a valve; which of these is suitable for a high-pressure cylinder, and which for the cylinder of a condensing engine? Describe how the cup with only one small cock is used. What is now generally used instead of these? How has this change come about?

95

Does a cylinder escape valve, self-acting, allow all the water to escape? If not, how much is left in the cylinder?

96.

What is a "Steam Lubricator" (sometimes called an Impermeator)? Explain its action? To what part of the engine is it connected? Whether will throwing cold water over it make it work faster or slower? Describe the one used in your last steamer?

97.

A common paddle wheel; of what is the centre made? Of what are the arms formed? What is the form of the bolts which attach the floats to the arms? How are the arms attached to the centres?

98.

Why have some paddle wheels one or more cast-iron floats in each wheel? With what engines are these most required? At what part of the circumference are they placed?

99.

Why are paddle wheel floats sometimes made of different breadths in the same wheel? With what description of engine is this most needed? Where are the broad floats placed and where are the narrow floats placed in the circumference of the wheel?

100.

What difference is there between a radial paddle wheel and one with feathering floats? What is the object of feathering floats? Are all the eccentric rods attached in the same way, and are they all of the same form?

101.

Whereabout is the centre of the eccentric of a paddle wheel with feathering floats placed? In that case are the feathering levers on the striking face or on the back of the float? When the paddle shaft has an outer bearing, how is the eccentric made?

102.

Of what materials are the working surfaces of a paddle wheel with feathering floats? How are they lubricated?

103.

What is a "Disconnecting Paddle Engine"? At what place is the disconnecting effected? How is it accomplished? In which of the cranks of a disconnecting engine are the crank pins fixed?

104.

Whether is link motion valve gear or the loose eccentric generally used for disconnecting paddle engines? For what steamers are disconnecting paddle engines frequently employed?

105.

What are expansion joints? Where are they necessary? What attention do they require? Of what should the working surfaces be made?

106.

What omission in the construction of expansion joints may lead to a serious accident when steam is first applied? How is this prevented in the construction of a steam trunnion pipe for an oscillating engine?

107.

Describe an oil cup with a syphon worsted? How is the worsted arranged? How is it cleaned? How far down the tube does it extend?

108.

Describe a thrust bearing; which of the surfaces wears? Why are there sometimes a number of oil tubes for one thrust bearing?

109.

What parts of a screw shaft are generally covered with brass? Why is this necessary? About what thickness is the brass?

110.

What is the stern tube or screw shaft pipe? Why is a pipe of such a length required? Of what is it made? How is it fixed at each end?

111.

What is a lignum vitæ bearing? How is the wood fitted? Where is such a bearing generally used?

112.

How is a screw propeller fixed on the shaft? What means are used to prevent its getting loose at sea?

113.

Where are sluice valves placed? What large sluice valve is there in almost all screw steamers? From what position should this valve be worked? Why so? What attention should it receive?

114.

With a condensing engine; what valves or cocks are on the skin of the ship in the engine-room and in the stokehole?

115.

What are the necessary fittings of a marine boiler?

116.

With a surface condensing engine, what cocks or valves are opened some time before the engine is started so as to be ready for starting whenever the order is given?

117.

What is a steam jacket? What cocks are on it? In what engines are jackets most generally used? Do they require to be felted?

118.

What parts of an engine or its fittings should be felted or otherwise protected from radiation?

119.

What are the small cylinders sometimes fitted on the slide valve casing cover of vertical engines? Explain their action. To what are they connected by a pipe? Why so?

120.

Name the principal pipes in connection with the engines and boilers of a steamer, and state to what the ends of these pipes are connected?

121.

Through what cocks are valves, pipes and chambers does the water pass on its way from the sea inlet rose plate to the water space of the boiler, with a jet condenser?

122.

Through what cocks or valves, pipes and chambers does the circulating water of a surface condenser pass?

123.

Through what cocks or valves, pipes and chambers does the steam pass from the boiler until it is in the form of water in the hot well?

124.

Name the pieces of the engine through which the pressure of the steam is transmitted from the piston to the screw propeller? Name them in the order in which they act?

125.

What is an air vessel? How does it act? At what parts of an engine or of its fittings are air vessels generally applied.

126.

What is the construction of a mudbox? Where should mudboxes be placed? Why are they necessary? How should the space be divided by the rose plate, and why?

127.

What is a trunk engine? Why has it fallen into disuse?

128.

What is an oscillating engine? For what steamers are oscillating engines generally adopted? Why? How is the steam conveyed to and from the slide valve casing?

129.

Of what parts does the valve motion gear of an oscillating engine consist.

130.

For what have geared engines sometimes been used? Or what were the cogs of the large wheel made?

131.

At what part of a screw steamer is the pressure that propels it applied to the hull?

132.

At what part of a paddle steamer is the pressure that propels it applied to the hull?

133.

About how much fuel per indicated horse-power per hour is required by modern steam engines, common, compound, and triple expansion?

134.

What is the explanation of the economy of the surface condenser?

135.

What is the construction of a surface condenser? Of what are its tubes made? How are they fixed? How are they kept tight? What is done with a split tube?

136.

Where do surface condensers foul? How are they cleaned?

137.

What non-conducting substances are employed to prevent radiation, and how are they applied?

138.

In the construction of smoke-box doors and of dry uptakes, what provision is made to lessen the amount of radiation?

139.

How can the formation of black smoke be prevented? Describe smoke-preventing apparatus?

140.

What is meant by "circulation" in a boiler, and what are the results of defective circulation?

141.

What means are sometimes adopted to improve the circulation in a boiler?

142.

By what arrangement is the circulation promoted in a "hay-stack" boiler?

143.

Describe a ship's side air-pump discharge valve, in what respects does it sometimes differ from a common stop valve, and what attention does it require?

144.

What is the construction of a feed escape valve, to what is its discharge connected, and how is its loading regulated? Where should the escaping water flow?

145.

When there is no feed escape valve, what is the arrangement of the feed valves or cocks?

146.

What is the measure of a horse-power? How is indicated horse-power ascertained?

147.

Has "nominal horse-power" a fixed meaning? What is the use of this expression? What is generally taken as the measure of one horse-power nominal?

148.

What is "back pressure" in a cylinder? About how much is it in each of the cylinders in your last steamer? Is excessive cushioning ever a trouble under certain conditions in modern engines? Say when and why and in which cylinder this occurs?

149.

What is meant by "speed of piston"? About how much is the speed of piston in modern marine engines?

150.

What is "atmospheric pressure"? What is its average amount? What instrument tells this amount?

151.

What is "gross pressure" or "absolute pressure"? What pressure is it that is shown by the steam gauge?

152.

What is meant by "cutting off" steam? How is it done? What part of the valve regulates the cut off?

153.

What is a piston slide valve? Describe its construction? Why are such frequently employed in place of the common slide valve? What is a great drawback to the use of these valves?

154.

What fixes the time of closing the exhaust? After the exhaust is closed and before the port opens for steam, what becomes of the steam that is in the cylinder?

155.

What is the "lead" of the valve? What is its object? About what amount is it?

156.

What is the "cover" or "lap" of the valve? What is its object? About what proportion of the stroke of the valve is it made?

157.

What is the "exhaust cover" of a side valve? What is its effect upon cushioning and upon exhaust?

158.

What is "minus cover" or "minus lap" on the exhaust? What is its effect upon the exhaust and upon cushioning?

159.

What is "cushioning" or "compression" in a steam cylinder? How is it affected by the amount of cover or of minus cover there may be upon the exhaust? How is it affected by the exhaust pressure?

160.

What is "mean effective pressure"? How is its amount ascertained?

161.

What is a dial vacuum gauge? What is its construction? For what is it used? About what amount should it show when the engine is working all right? What effect has the variations it indicates on the performance of the engine?

162.

Does the vacuum gauge enable you to tell what pressure there is in the condenser, or must you have recourse also to the barometer to arrive at that? How would you ascertain the actual amount of back pressure there is in the condenser?

163.

What is a barometer? What is its construction? Is a barometer sometimes used instead of a vacuum gauge? In what respect does the weather barometer differ from the vacuum gauge barometer?

164.

The common vacuum gauge and the common steam gauge, in which of them are the graduations marked from atmospheric pressure? Does either of them tell what is the true actual pressure in the boiler or in the condenser?

165.

Do steam and vacuum gauges vary with the variations of the weather barometer? When the weather barometer varies from 29 to 31, how much will the vacuum guage vary and how will that affect the working of the engine? Why?

166.

Vacuum is generally stated as so many inches. What is meant by, say, 20 inches vacuum? What does that tell us about the absolute pressure of the vapour then in the condenser?

167.

From what depth will a pump draw water? Is there any limit? Why?

168.

What is vacuum? Can vacuum move a piston? When the temperature of the water in the condenser is 212°, what is the greatest degree of vacuum there can then be in the condenser?

169.

What is a thermometer? its construction? What is the property of matter that is the principle of its construction? What temperatures are regularly noted by careful engineers?

170.

What is the temperature of (1) melting ice, (2) of boiling water, (3) of steam about 60 lbs. pressure by the steam guage (4) of steam about 100 lbs., and (5) of steam about 150 lbs., also (6) smoke in the funnel, and (7) of water in the hot well?

171.

What is meant by the "conduction" of heat? Give examples of it in the boiler and in the engine?

172.

What is meant by the "convection" of heat? Give examples of it in the boiler and in the engine?

173.

What is meant by "radiation" of heat? Give examples of it in the boiler and in the engine?

174.

Which is convection, which is radiation, and which is conduction in the following cases:—(1) Heat from the glowing fuel to the furnace crown? (2) Heat passing from one side of the furnace crown plate to the other? (3) Heat passing from the steam pipes in the engine-room? (4) The heat of evaporation?

175.

What are the effective heating surfaces of a marine boiler?

176.

What parts of a marine engine are exposed to danger when the temperature is below freezing point?

177.

What precautions are necessary in cold climates when the temperature is below freezing point?

178.

State as many ways as you can by which a boiler might not get its full feed. A boiler, or one of a set of boilers, gets short of water although the feed valve is open its proper amount; to what causes might this be due?

179.

Of what are furnace bars generally made? About what thickness are they at the top? About what space is between them? Whether are the bars put further apart for Newcastle coal or for Welsh coal?

180.

Which burns faster—Newcastle coal or Welsh coal? Which is the flaming coal? Which makes most smoke?

181.

About how many tons of steam coal will be burnt per day in four furnaces, each 3′ 0″ wide, and of about the usual length? On what grounds do you say so?

182.

About how many tons of steam coal will be burnt per day with good triple expansion engines to drive an ordinary steamer of 40 feet beam 10 knots an hour by steam alone? On what grounds do you say so? What percentage more coal would be required to propel the same steamer one knot faster?

183.

About how many tons of steam coal will be burnt per day with a good triple expansion engine, surface condensers, the low pressure cylinder 60 inches diameter, doing average work? On what grounds do you say so?

184.

A pair of inverted cylinder direct acting engines, there is a liner half an inch thick between the ahead eccentric rod and the eccentric strap, in overhauling the engine this piece is lost and forgotten; what difference will its omission make in the working of the engine, on the admission, on the cut off, and on the exhaust of the steam? Which will take place earlier and which later, distinguishing between the up stroke and the down stroke?

185.

A pair of inverted cylinder direct acting engines driving a right-hand screw; on which of the crosshead guide bars is the pressure greatest in the up stroke, and on which in the down stroke?

186.

A screw propeller is getting loose, it has a little play on the shaft, sideways on the key or feather; how will this show in the engine-room?

187.

How would you prove whether the centre line of the trunnions of an oscillating cylinder be fair with the centre line of the main shaft?

188.

How can the fairness of a line of screw shafting be tested without lifting the shafts?

189.

Where are steel forgings generally used in marine engines?

190.

What is the composition of nickel-steel? Where is it sometimes used in engines and boilers?

191.

How is forced draught generated on board ship and supplied to boiler-furnaces? Is the air heated before delivery? If so, how?

192.

What is "induced" draught? Compare the merits of "forced" and of "induced" draughts?

193.

How is the intensity of the draught measured? What is the usual pressure employed in the mercantile marine?

194.

An explosive gas is liberated from bunker coal. Usually in well ventilated bunkers this gas escapes into the atmosphere without doing harm. In ill-ventilated bunkers the gas after mixing with a certain proportion of common air has been known to explode when a naked light has been brought is contact with it. What is the composition of the gas? Where is it found, in bunkers, 'tween decks, pockets, and coal shoots? How may it be got rid of as soon as it evolves from the coal? How many cubic feet of air to one of the gas forms a violent explosive mixture?

195.

A lighted lamp or candle has sometimes been lowered into an apparently empty paraffin tank and produced an explosion resulting in injury to the person holding the light. What did the tank probably contain, and what produced the explosion?

196.

In vessels carrying coal-cargoes it has been observed that, generally speaking, the gas which escapes from the body of the coal is found more abundantly at the forward end of the hold than at the after end. Why should this be so?

197.

In recently opened ballast tanks, double-bottoms, and boilers, a light lowered into either has sometimes been extinguished. What would, in all probability, cause this?

198.

In double-bottom steamers where does the bilge water lie, and where are the roses of the bilge pipes fitted?

199.

What is the advantage of a large rose over a small one?

200.

Why, specially in vessels carrying cargoes liable to shift, should engine bilge suctions be fitted to both wings of the bilge?

201.

In a heavily listed vessel, why is it difficult to keep steam?

202.

If the engine bilge pumps get choked and water accumulates in the stokehold bilges, what effect does the water have upon the bilge boards and stokehold plates, when the ship is rolling violently?

203.

In a triple-expansion engine, what spare gear do you consider necessary in the case of a foreign-going ship? Also what stores would you provide for a voyage to New Zealand?

204.

What means are sometimes provided for temporarily coupling together the broken parts of, say, a tunnel-shaft? Describe the fitting?

205.

Does the pressure on the thrust-collars vary with the horse-power, or with the speed of the ship, or how?

206.

If the holding down bolts of a thrust-bearing should become slack, what effect would it have upon the working of the engines?

207.

In an engine with three cranks, which of the three is subject to the greatest torsional stress (1) in going ahead, (2) in going astern?

208.

Is it usual to make the crank shaft of a triple or quadruple expansion engine in one piece? And is the diameter of the shaft uniform from end to end? Give your reasons for the practice which obtains?

209.

In a "built hair" crank shaft how are the webs rigidly secured to the pins and to the body of shaft?

210.

There are various descriptions of donkey engines in use on board ship for pumping purposes. Some pumps are fitted with escape-valves, some are not. Why should this be?

211.

Explain the function of an air-vessel fitted to a feed pump. Make rough hand sketches of (1) a satisfactory vessel, (2) an unsatisfactory vessel, where, say, the air-spring has been destroyed by carelessness, or has never been properly provided?

212.

Should cocks or escape-valves be fitted to air-vessels? Why, or why not?

213.

Where, by preference, should the escape valve of a feed pump be placed? Why?

214.

Scum cocks are sometimes fitted to boiler-shells at a height convenient for Engineers to manipulate when standing in the stokehold; the scum pipes in such cases are led upward, inside the boiler, to a little above the combustion chamber tops. What danger may arise from this arrangement?

215.

Cocks for testing the water level of boilers are sometimes fitted within reach of the engineer who is standing in the stokehold. These may have internal pipes leading upward and terminating at various levels. Under what circumstances may these become misleading ?

216.

Why should the pipe which leads from the bottom of the water-gauge column to the bottom of the boiler-front, or back, be covered with non-conducting material? Why also should it never have lengthy horizontal bends?

217.

In your own experience, how frequently is this pipe removed and cleared ?

218.

Why, even with the best of water-gauges, is it advisable to occasionally use the drain-cock ?

219

Steam loops have sometimes been inadvertently made in the length of piping leading from the top of the water-gauge column to the top of the boiler. Roughly sketch such a loop and explain the danger arising from its existence ?

220.

Describe your method of thoroughly testing the water-gauge system to satisfy yourself that all the cocks and pipes are clear Your answer can be written on a supplementary sheet of foolscap, which the Examiner will hand you. Hand sketches, mere lines indicating pipes and circles indicating cocks, should be made Identify the cocks and pipes by letters or numerals.

221.

Describe the construction of a water-tube boiler, mentioning the type selected ?

222.

In a water-tube boiler, how is an economiser fitted, and what is its duty ?

223.

How is the water-gauge fitted ? Are glass-gauges used ?

224.

The pressure of the steam in water-tube boilers is sometimes greater than at the engines. Why is this, and what percentage above the engine pressure does it amount to ? How is this difference of pressure maintained ?

225.

Describe any automatic method of feeding water-tube boilers. Of what material are the tubes made ?

226.

Describe the construction of any steam turbine you are acquainted with, which is used on board ship How is the expansion of steam effected ? How many propeller shafts are employed, and how many propellers ?

227.

Is the same power available to go astern as to go ahead ?

228.

Of what material are the propellers made ?

229.

How many pounds of coal per indicated horse-power per hour are burnt with this type of engine ? Name the type of boiler in use ?

230.

Describe one of the several classes of refrigerating machinery in use on board of ship. Several types exist, one being more economical than the rest. Which is it ?

231.

Describe the defects to which the selected type is subject. How are the defects overcome ?

232.

How frequently are the parts opened out for examination ? Name the parts ?

233.

How frequently are the condensers of refrigerating plants opened for examination ? How frequently are the coils tested by hydraulic pressure ? On which side of the coil is corrosion most commonly found ? Why should this be so ?

234.

Where ammonia is used in refrigerating machinery, should the machinery by preference be isolated ? Why ? In reply, give what information you possess bearing on the matter, naming the ships for purposes of identification.

235

Explain how the ammonia is removed from the tubes in which it is supplied, and how passed into the refrigerating machine ?

236.

What objection is there to the presence of water in the ammonia ?

237.

Describe the ammonia process of refrigeration.

238.
Of what material are the parts made which are in contact with the ammonia?

239.
Are escape-valves fitted to the compressors of ammonia machines?

240.
What is the maximum pressure found in the compressors of ammonia machines?

241.
What kind of pressure and other gauges are used in ammonia machines?

242.
Explain how carbolic acid is removed from the tubes in which it is supplied, and how passsed into the refrigerating machine?

243.
What objection is there to the presence of water in the carbonic acid?

244.
Describe the carbonic acid process of refrigeration?

245.
Of what material are the parts made which are in contact with the carbonic acid?

246.
Are escape-valves fitted to the compressors of carbonic acid machines?

247.
What is the maximum pressure found in the compressors of carbonic acid machines?

248.
What kind of pressure and other gauges are used in carbonic acid machines?

249.
In which type of machine is brine used? What is its density? Where does it circulate?

250.
Are fans for circulating air used in any of these processes? If yes, why are they necessary?

251.
What means are in some cases employed for ascertaining the temperatures of refrigerating chambers without entering them?

252.
What effect may the swabbing of the compressor-piston rods have upon the working of refrigerating machinery?

253.
What is a rectifier? Explain its use?

254.
Describe the cold-air process of refrigeration?

255.
Of what material are the air suction and delivery valves made? How are the valves kept on their seats?

256.
How many compressors are there to a cold-air machine?

257.
What is the duty of the expansion cylinder of a cold-air machine?

258.
What objection is there to the presence of moisture in the air passed through the cold-air machine?

259.
How is water to some extent removed from the air? What is the minimum temperature of the air?

260.
What is the maximum pressure found in the compressors of cold-air machines?

261.
What kind of pressure and other gauges are used in cold air machines?

262.
In refrigerating engines generally, to where is the exhaust steam led?

263.
Cold-air chambers on board ship are insulated. How insulated, and why?

264.
Is it prudent to allow the wires of an electric circuit to pass through the insulation? Explain fully.

265.
Describe the construction of a feed water-heater and give the name of its manufacturer.

266.
Describe any well-known ash-ejector.

267.
Describe any well-known independent feed pumps.

268.

Are independent feed pumps automatic in their action? Explain the action.

269.

What advantage, if any, have independent feed pumps over feed pumps worked by the main engines?

270.

To about what temperature is the feed water raised by passing through a feed-heater?

271.

What fittings are usually placed on a feed-heater? Why are they necessary?

272.

Describe the construction of a feed filter, enumerating its valves and cocks.

273.

How can the filter be cleaned? and what ingredients are generally removed when cleaning takes place?

274.

What is the intercepting material made of? How is it fitted?

275.

Describe an evaporator, and mention the type?

276.

What fittings are necessary with evaporators?

277.

How is the brine got rid of?

278.

How may the coils be cleaned?

279

What is a dynamo? Describe its various parts? For what is it used?

280.

In what respect does an electric motor differ from a dynamo? Where are electric motors sometimes used on board ship?

281.

Describe a system of electric lighting employed on board ship?

282.

How is the position of a fault in the circuit discovered?

283.

What is "sparking," and may it under some circumstances (naming them) be a danger?

284.

What is "short-circuiting," and to what evil may it give rise?

285.

What means are employed to prevent any part of the circuit becoming overheated?

286.

Describe the features of an arc lamp.

287.

Describe the construction of a glow-lamp.

288.

What is the usual candle-power of the small glow-lamps in general use on board ship?

289.

Define the following terms:—Amperè, volt, ohm, watt. What is the measure of an electrical horse-power?

290.

Explain the uses of switches, brushes, commutators, cutouts, field-magnets, armatures and resistance-coils.

291.

Why is it desirable to fit a dynamo in a cool place on board ship?

292.

What undesirable effect will ultimately occur to an electric wire, whose sectional area is constantly diminishing, say, through corrosion?

293.

What danger might arise from leading electric wires through coal bunkers?

294.

Is it better to lead electric wires above or below side-scuttles? Why?

295.

What instruments are used on board ship to ascertain the strength of an electric current?

296.

Many ocean-going steamers are fitted with hydraulic cranes, &c. From where do they obtain their power? How is the hydralic pressure kept at a relatively constant amount?

297.

Is any difficulty experienced in working hydraulic cranes in frosty weather? If so, why?

298.

Describe any steam steering gear you are acquainted with?

299.

When the helm is put hard over and the ship is going full speed ahead, what prevents the rudder returning to the amidship position?

300.

In the case of a steamship under way, does the officer, or man manipulating the steam steering wheel, overcome any resistance exerted by the rudder?

301.

Explain clearly what is being done by a helmsman manipulating the wheel of a steam steering engine?

302.

Is there any difference between the amount of horse-power required to put a helm hard over, in a given time, when the vessel is going full speed ahead, and when she is going full speed astern? This question refers to a case of a steamer fitted with one rudder only, and demands a more complete answer than merely "yes" or "no."

303.

What precautions should be taken before removing a manhole-door from a steam-boiler and why are these precautions necessary?

NOTE.—Questions isolated from their context should be read in the light of the context. Thus the "sparking" referred to in question 283 relates to the sparking in an electric lighting circuit on board ship. *See* question 281.

APPENDIX C.

EXAMINATION in ROUGH WORKING DRAWING for a FIRST CLASS ENGINEER'S CERTIFICATE of COMPETENCY (FORM EXN. 17).

1. The regulations in regard to the qualifications of a candidate for a first class engineer's certificate of competency specify that—

> "He must be able to make rough working drawings of the different parts of the engines and boilers.
>
> "He must be able to state the general proportions borne by the principal parts of the machinery to each other."

2. In accordance with these clauses, a candidate for a first class certificate is required to make a rough working drawing of the parts specified as on page 64.* An engineer who has been some years in charge of marine engines and boilers ought to have familiarly in his mind the general construction of at least one set of engines and boilers, say that set he was last with. Fine drawing is not expected, and in the proportions of the parts a wide margin will be allowed; absurd dimensions will be failure in practical knowledge.

3. The drawing must, however, be practically a working drawing, giving a sufficient number of views to show the parts fully—sections, plans, or elevations, just as the candidate would require to be supplied to him if he had to make the parts to the design of another person.

4. A clear hand sketch showing the construction completely and fully dimensioned will be accepted if the candidate prefers this alternative.

5. A portion only of the parts specified may be accepted in place of the whole, if that portion is sufficient to show that the candidate has a good practical idea of the construction of the parts, and a fair notion of their general proportions or dimensions.

6. Candidates are hereby cautioned not to put on paper what they have not fully considered, and deliberately intend to be understood, as their statement of what they know about the construction of any part required.

7. The statements given in by a candidate may be in themselves, apparently, of little importance, but, as sample material from which the state of the candidate's knowledge of engines and boilers is to be inferred, every detail which is glaringly inconsistent with a sound knowledge of the use of the part, or in which an essential consideration has evidently been overlooked, is an important element in the description which the candidate is giving of his own qualifications.

8. The candidate is advised not to begin more than he can clearly finish in the time allowed. An important object in this part of the examination is to ascertain whether the candidate can be trusted to mark all necessary dimensions upon a sketch or a drawing. The test of this is, practically, the making of the part from the sketch without having to supply additional dimensions, and without measuring the drawing. To prove this ability the candidate must fully dimension the parts shown in his sketch or drawing, notwithstanding that the parts may be correctly drawn to scale. A drawing is fully dimensioned when no part of it is left to the option of the party who is to work to the drawing.

9. To prevent misunderstanding, however, when the candidate has been led into showing more of the details than he has time fully to finish, he should name, in the statement on the other side, the particular parts which he has fully dimensioned.

10. All dimensions should have lines and darts, to indicate distinctly the points between which the dimensions are given.

11. Beware of writing cross dimensions upon centre lines, or upon longitudinal dimension lines. This is not an order but a recommendation.

12. The candidate is not expected to design anything; he has merely to sketch or draw a something with which he is expected to be already familiar. At the same time he should call attention to any defect in the design of the article or apparatus. Omission to do so will imply want of practical knowledge.

* Page 1268 of the Gazette.

13. Pencil in nothing after half-past 3; all the dimensions, the figures, and the darts must be inked in; employ the remaining time in examining the drawing and in inking in any figures which may have been before overlooked, and in checking the dimensions.

14 Make sure that you will have sufficient room on the drawing sheet to show all the necessary views. You can have another sheet of drawing paper if necessary. All the paper used must be forwarded with the drawing.

SUBJECT FOR EXAMINATION IN ROUGH WORKING DRAWING (FORM EXN. 17A).

(Specimen).

Read the foregoing general instructions.

A common slide valve with its spindle. Show also an outline section of the ports at the cylinder face Show the provision for connecting the slide valve to the spindle.

The candidate is requested to fill up the following, and to attach this paper to his drawing:—

STATEMENT BY THE CANDIDATE.

The accompanying drawing, made by me this day, without referring to any document, and without the assistance of any person, is intended by me to be sufficient for the new construction of the parts above described to fit the places of similar parts which are to be removed. The construction is similar to what I have been with in the ———— steamer ————, but the dimensions may be different.*

The diameter of the cylinder is————
The stroke of the piston is————
The stroke of the valve is————
The cover at top end on steam side is————
The cover at bottom end on steam side is————
The lead at top is intended to be————
The lead at bottom is intended to be————
The inside cover is + ———— o —————
The thickness of the face of valve is————
The thickness of the body of valve is————
The greatest opening for steam will be————
That gives an area equal to one————
The opening for exhaust when the crank is on the top centre is————
That gives an area equal to —— ———— th of piston.
The length of the connecting rod is————
The valve will cut off steam on the down stroke at————
The valve will cut off steam on the up stroke at————
The parts fully dimensioned, in ink, are———— } *The Candidate may omit this part if he chooses.*

Dated at————
this————day of————19——.

————Applicant.

APPENDIX D.

READING THE WATER-GAUGES.

NOTWITHSTANDING that the reading of the water-gauge is made a special feature in the examination of engineers, many boiler casualties result from the engineer of the watch either not understanding the construction of the water-gauge fittings or not satisfying himself by actual trial that the cocks, pipes, &c, are clear.

In one case, two furnace crowns came down in a steamer that was just starting on a voyage. The engineers were satisfied that there was plenty of water in the boiler because the water-gauge showed full glass, and they called the attention of a Board of Trade Surveyor to this fact as being conclusive evidence that the casualty could not have resulted from shortness of water. On examination of the fittings, however, it was found that the cock between the boiler and the steam pipe leading to the gauge was shut, having been carelessly left in that position on the previous day when the mountings were overhauled for survey. Directly the cock was opened the water disappeared from the gauge-glass, and the second engineer admitted that he had blown down the boiler in order to lower the water level, as the glass was full.

Many steamers have had their furnaces brought down at sea in a similar manner to the above through what the engineers of the watch have called "false water in the glass," and which on examination has been found to result from the top communication being choked.

These casualties resulted from what, to say the least, was bad management, not false water.

Unless a candidate under examination is able to prove that he understands how to verify the indications of the water-gauge, he should not be passed in practical knowledge, and, as failure in practical knowledge involves the candidate going to sea for another three months before being eligible for re-examination, the examiner should explain to such candidate his error, after failing him, in order to prevent further casualties resulting from his want of knowledge on this subject

The sketches, Figures 1, 2, 3, 4, and 5, Plate I. represent the usual methods of attaching water-gauge mountings to marine boilers The important features in each gauge and the method of verifying its indications are dealt with separately in the following remarks:—

* Run the pen through the words that do not apply.

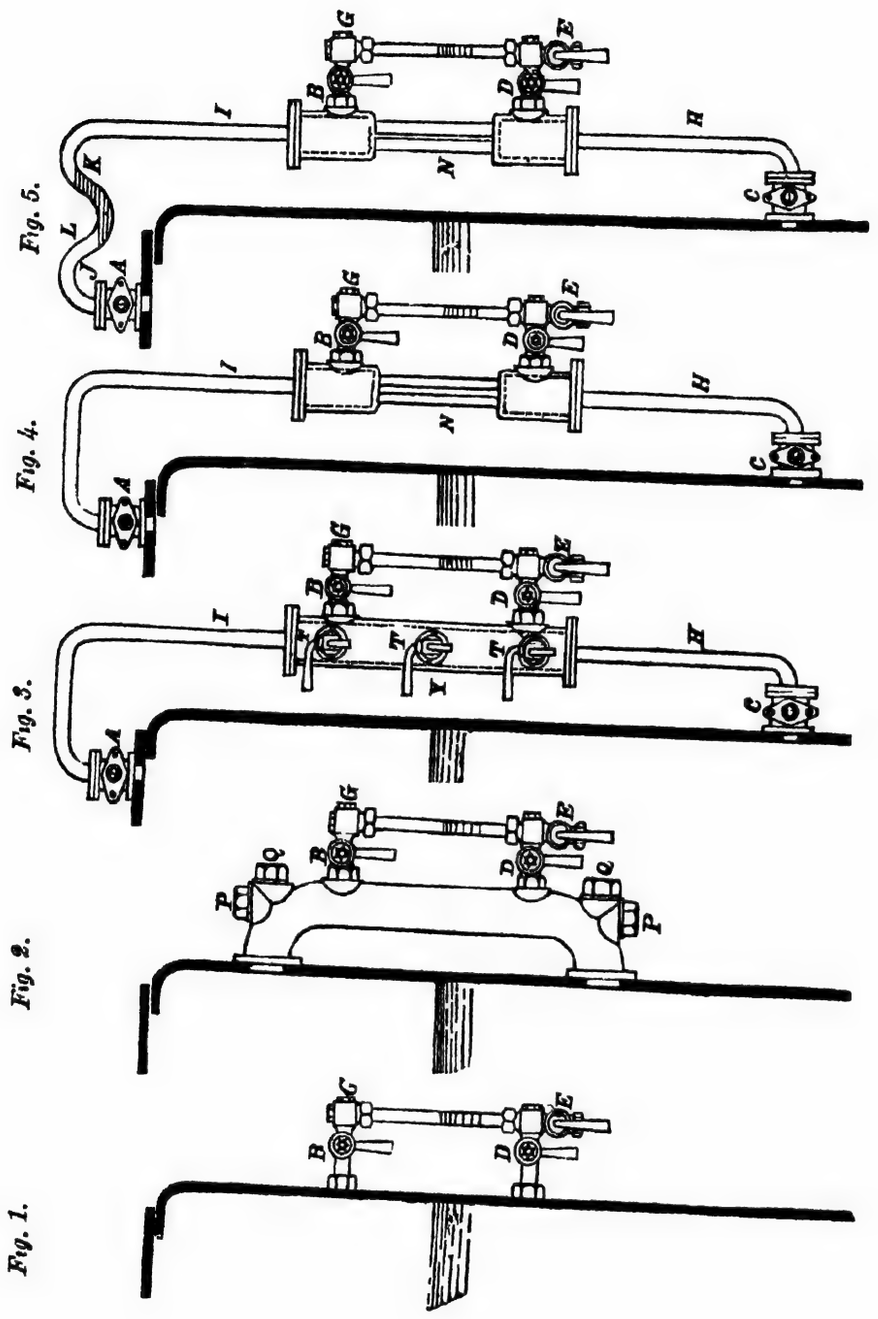
Fig. 5.
Fig. 4.
Fig. 3.
Fig. 2.
Fig. 1.
A
B
C
D
E
G
H
I
K
L
N
P
Q
T
Y

REFERRING TO FIGURE 1 ONLY.

In this case the water-gauge cocks are attached direct to the boiler, and the accuracy of the gauge when the boiler is under steam can be tested as follows :—

First.—Let B remain open, then close cock D and open cock E, and if steam issues it proves that cock B and the passage through the top fitting and gauge glass are clear. If no steam or water issues, either cock B or the passage through the top fitting and gauge glass is choked and the gauge cannot act properly until the obstruction is removed.

Second.—Close cock B and open D and E, and if water issues, cock D is clear. If no water or steam issues, either cock D or the passage from the boiler through the lower fitting is choked and must be cleared before the gauge can act properly.

REFERRING TO FIGURE 2 ONLY.

In this case the gauge cocks are attached to a bent pipe of comparatively large diameter (at least 3 inches in the bore), the upper end of which communicates with the steam space, and the lower end with the water space of the boiler. Owing to the bore of the pipe being large it is not liable to become choked or stopped under the ordinary conditions of working. The water-gauge is, therefore, in practically the same condition as if it were attached direct to the boiler. as in Figure 1. This gauge, when at work, is tested in precisely the same manner as the one shown in figure 1.

Screw plugs are inserted at PP and QQ, by the removal of which the apertures in the pipe can be cleared, if necessary, by the insertion of a wire or rod when steam is down.

REFERRING TO FIGURE 3 ONLY.

In this gauge there is an open communication from A to C through the column Y, and in order to "blow through the *glass*" it is only necessary to shut cocks D and B alternately, keeping E open. But to "blow through the *water-gauge*," including the pipes H and I, it is necessary, after blowing through the glass as described above, to shut A and C alternately, at the same time keeping B, D and E open for such time as will ensure the complete discharge of the contents of the gauge and its connections. When B, D and C are clear and A choked, the steam lodging in the glass and in the pipe I leading from column Y to A becomes condensed, and the water flowing through C to take its place rises in column Y and in the glass to a level above that of the water in the boiler. In other words, the gauge shows a false level. If now E be opened and water is blown out, then on E being again closed the water in the gauge will rise higher than before and be still further misleading. On the other hand, when B, D and A are clear and C choked, the water, if any, in the glass is trapped and no longer rises and falls with the water in the boiler or with the motion of the vessel; it, however, slowly rises in the glass owing to the condensation of the steam in the upper part of the gauge until such time as E is opened when the whole of the water in the glass is blown out, and on E being closed the glass does not show any water notwithstanding that the water in the boiler may be at the proper level. When the test cocks T T T are attached to column Y, as shown in Figure 3, they cease to be reliable when either cock A or C or the pipe in connection therewith is choked, or nearly choked.

REFERRING TO FIGURE 4 ONLY.

Sometimes the water-gauge fittings are arranged as shown in Figures 4 and 5, with no passage up the column, the central portion (N) of the column being simply a pillar or connecting piece of any convenient section between the upper and lower portions to which the cocks B and D are attached.

By this arrangement double communications are obviated and there is no need for what is known as "double shut off" in testing the accuracy of the gauge. When, however, the gauges are constructed in this manner the cocks B and D are unreliable as test cocks in the event of there being no glass in the gauge. This feature should be carefully noted. Moreover, when in working condition the reduction of pressure in the glass which arises when E is opened causes the water in pipe H to rise above its normal level. This objectionable feature should also be noted.

REFERRING TO FIGURE 5 ONLY.

Sometimes there is a bend, L, in the steam pipe I leading from cock A to cock B This has occasionally escaped observation when new boilers have been fitted on board ship. In most cases this bend arises from the pipe being led in an abnormal direction to escape other pipes, beams or fittings near the smoke box. With such a bend the condensed steam collects in the pipe and falls to the bottom of the bend, and in time it completely fills the pipe from J to K. The steam from K down to the level of the water in the glass is thereby trapped and, as condensation proceeds, leads to a reduction of pressure in the pipe below that of the boiler and an equivalent rise of the water in the bend and also in the gauge-glass. When the vessel is quiescent the water in the gauge-glass increases in height until cock E is opened or until the pressure in the boiler is so much in excess of that in the lower part of pipe I as to cause the water in the bend to be blown into the gauge-glass. In either case instantaneous change of water level ensues.

In the ordinary course of working the phenomenon described above is more or less modified by the presence of air in the upper part of the gauge and by the rise and fall of the water in the boiler and gauge-glass arising from the rolling or pitching motions of the vessel.

OTHER SPECIAL POINTS TO BE NOTED.

When the cocks A and C are omitted, as in Figure 2, it is owing to the bore of the stand pipe being sufficiently large to enable it to be regarded as part of the boiler. Such pipes require, however, to be examined and cleared at intervals by passing a rod through the holes provided for the purpose at PP and QQ.

Cocks at A and C are not necessary for the testing of gauges arranged as shown in Figures 4 and 5. Examiners ought, however, to make sure that candidates are aware of the impossibility of testing the reliability of the indications of water-gauges arranged as in Figure 3 when the cocks A and C are absent and of the effect which the choking of cock A or C, or pipe H or I has on the indications of the test cocks T T T attached to column Y.

Probably more than half the steamers afloat are fitted with water-guages as shown in Figures 3 and 4, and it is therefore specially important that engineer candidates should thoroughly understand their construction, the principle on which they act, and the steps which must be taken to keep them in an efficient condition.

When fitting a gauge-glass into its place it is specially important that it should not be placed so high as to prevent a clearing rod being inserted at G, figures 1, 2, 3, 4 and 5. This defect, especially if it occurs in a water-gauge attached to a boiler subject to priming, permits a rapid accumulation of scum around the top of the glass and results in the choking of the orifice leading from cock B to the gauge-glass in each of the figures.

When a gauge-glass is too short or is placed either too high or too low in the fittings, it is also liable to become choked by the packing material being forced over its ends by the glands whilst being screwed up.

The use of unsuitable or insecure internal pipes in connection with either the ordinary gauge-glass cocks of the description shown in Figure 1, or with test cocks which are joined to the boiler itself, should also be carefully guarded against.

Boiler casualties have resulted from the cocks B and D having the parts wrongly placed as shown in Figure 6, Plate II. In one case of that kind which forms the subject of Report No. 208 under the Boiler Explosions Acts, the engineer in testing the water-gauge omitted to see that the passages in the cocks B and D were clear *when the handles were in their proper working position*. This defect could easily have been discovered if proper attention had been paid to the condition of the cocks. A defect of this nature may be due to faulty construction originally, or to the handle of the cock having being overstrained, and the neck twisted. Whether the passages in the plugs are fair and clear can, however, be verified in a few minutes. As an illustration, the water cock D, Figure 6, Plate II, can be verified by blowing through E with B shut and then moving the handle of D to one side until it is just closed, and then to the other side until it is again just closed; the proper working position of the handle is about equally distant from each of the above positions. The other cocks can be verified in the same manner.

Another serious casualty occurred through the handle of the cock A, Figure 3, having been twisted from its original position relatively to the orifice of the cock, resulting in the cock being shut when apparently open.

When a water-gauge, that is clear in all its parts, has been thoroughly blown through, the water in the glass rises above the level at which it formerly stood, immediately the drain cock E is closed, but if left undisturbed for a time it gradually falls to its former position. The amount of rise which occurs on these occasions depends chiefly on the temperature of the contents of the boiler and on the length of the pipes by which column Y is connected top and bottom to the boiler, but in cases where the gauge is of the description illustrated in Figures 3, 4 and 5, it amounts in high pressure boilers to about 4 inches, while the time occupied by the water in returning to its former level ranges from 30 to 40 minutes. The cause of this rise is twofold, namely (*a*) the displacement of the comparatively cold water in pipe H by hotter and proportionately lighter water from the boiler, and (*b*) a slight condensation of the steam and a corresponding fractional reduction of pressure in pipe I. The cause of the gradual subsidence of the water in the glass to its former level is also of a dual character, namely, (*a*) the cooling of the water in pipe H, and (*b*) the diminution in the condensation of steam in pipe I owing to the collection therein of air released from the steam condensed.

These results will, however, be somewhat modified if the water in the boiler is of higher density than in pipe H, and this will nearly always be the case owing to the condensation of the steam in the glass and upper fittings of the water-gauge, causing the water in the lower part to be fresher than that in the boiler.

The examiner should impress upon candidates the necessity for periodically blowing through the water-gauge on each boiler (no matter what the form may be) in a systematic and thorough manner, and, in cases where a boiler is fitted with two water-gauges, of keeping both in constant use; finally, he should further impress upon them the necessity for keeping the water-gauges well lighted, clean, and in all respects efficient.

APPENDIX E.

EXAMINATION OF MASTERS AND MATES IN STEAM.

These examinations are provided for the purpose of giving Masters and Mates who are possessed of Certificates of Competency an opportunity of undergoing a voluntary examination as to their practical knowledge of the use and working of the steam engine. The examiners are appointed by Government,

Fig 6.

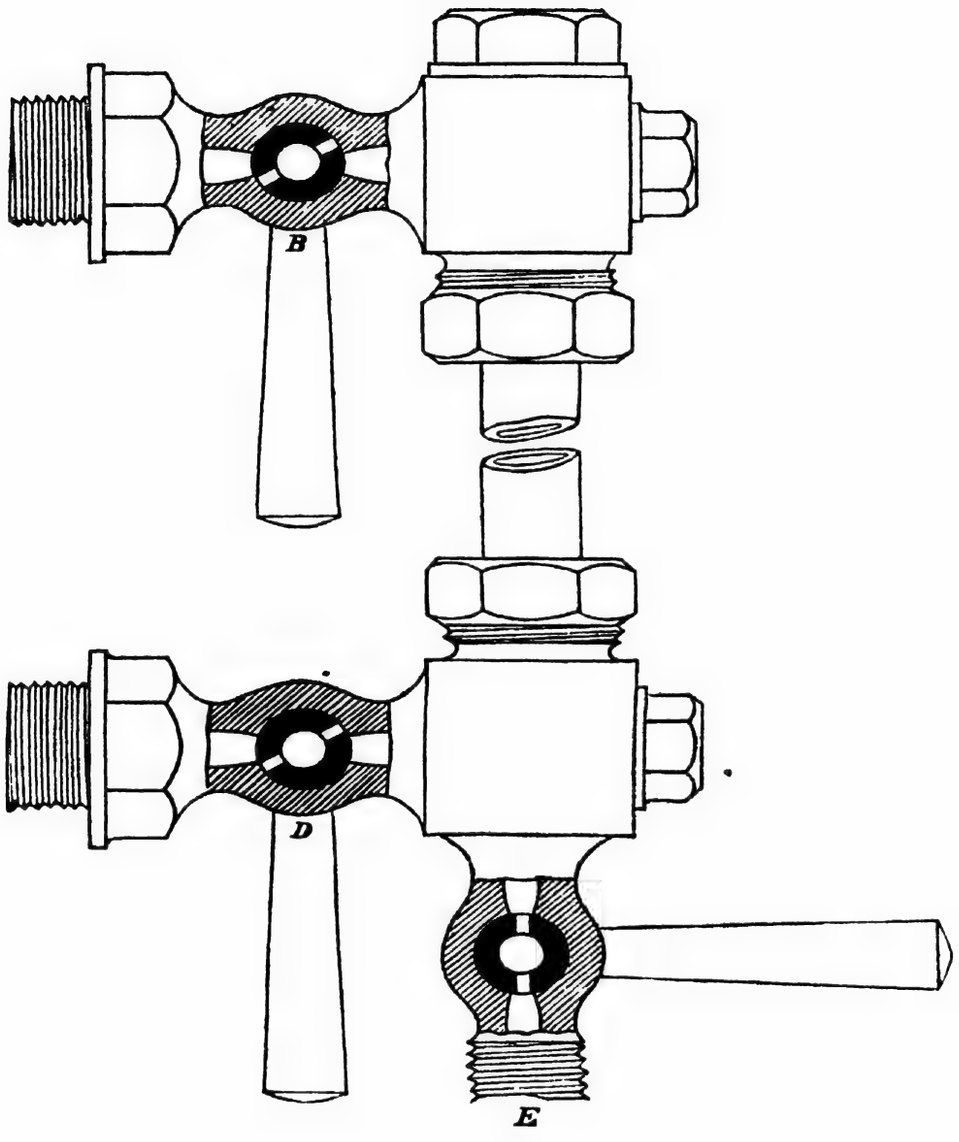

The examination is open to any person who holds a Certificate of any grade in the Foreign or Home trade or as Master of his own pleasure yacht. Candidates should fill up the form of application, Form Exn. 2, at the Port Office, pay the fee of Rs. 15, and deposit their Certificates with the Port Officer, who will inform the applicant when and where to attend to be examined. If the candidate fails to pass his Certificate will be at once returned to him.

If he passes, the report (Exn. 15) will be sent to the Port Officer, and the Certificate, together with the Form Exn 2, will be sent to the Government; the words "Certified to have passed in steam," with the date and place of examination, will then be entered on the Certificate and its counterpart, and the Certificate will be sent to the Superintendent of the Mercantile Marine Office of the port named in the Form Exn. 2, and be delivered to the candidate in the usual manner.

If a candidate fails he may not present himself for re-examination until the expiration of three months from the date of failure.

The examination is for the most part *viva voce*, and extends to a general knowledge of the practical use and working of the steam engine, and of the various valves, fittings, and pieces of machinery connected with it; and of the way in which electric lighting is carried out on board ship. Theoretical questions on calculations of house-power or areas of cylinders and valves or any of the more difficult questions relating to steam engines and boilers will not be asked.

Examiners are to satisfy themselves that the candidates know the names and understand the uses of the various parts of engines and boilers, and their connecting pipes, valves, cocks, &c. Practical knowledge, as distinguished from theories and abstruse calculations, is to be the test of the candidate's fitness to have his Certificate endorsed.

The Examiner should arrange to conduct part of the examination in the engine room of a steamship, unless from circumstances he finds it impossible to do so; but in the event of the candidate passing, the Examiner should state in writing what circumstances prevented a visit to an engine room. If an opportunity offer, the candidate should be permitted, under the guidance of the Examiner, to start and stop the engine of some vessel which may have her steam up.

The Examiner, in sending in his report of the Examination, should state where the examination has been held.

Candidates will be required to give written answers to sixteen out of twenty questions taken from the Elementary Questions printed in Appendix C. These questions will be altered from time to time without notice. The twenty questions are not to be difficult, theoretical, or book questions, but are to be such as any man of ordinary capacity, who has any practical knowledge of the use and working of the steam engine, ought to answer.

If a candidate refers to any book or paper or memorandum, or obtains information from another candidate during the examination, he will be treated as having failed, will forfeit his fee, and will not be allowed to be re-examined for a period of three months.

The examiners will report in the case of failure, the nature of the question or questions that decided the failure, or the point in the management of the engine in which the candidate was deficient.

There is nothing in the regulations requiring that applicants for the voluntary examination shall have served on board steamships; all that is required is that they shall have a practical knowledge of the use and working of the steam-engine. Examiners will not fail to appreciate the fact that practical knowledge is best gained in the engine-room; and the examination of an officer who does not produce official evidence of service in steamships, and of experience of engines, must necessarily be more searching than in the case of one who produces evidence of such service and experience.

Examiners will require all candidates to fill up a Form Exn. 15 (*b*), and they will forward it to the Port Officer with the report of the examination.

Masters and Mates may cancel questions A, B, and C, but they should fill up the form for questions D, E, F, and G, as evidence of their practical knowledge.

A candidate for this examination is required to have a thorough grasp of the construction of the steam-engine and boiler, to enable him, in the first place, to understand the nature and importance of any defect which may be reported to him by the Chief Engineer, and so that he may work in harmony with him in affording time and facilities for disconnexions, inspections, adjustments, and repairs.

To have a looking-on knowledge of what the principal repairs are about engines and boilers and pipes, and how these repairs are accomplished.

To be able to form an independent opinion as to a breakdown, and the consequent propriety or impropriety of proceeding under steam with temporarily repaired or defective machinery.

To understand how to estimate approximately the reduction of fuel required for reduced speed, and consequently to sanction such reduction of speed as may seem to him to be warranted by the report of the Chief Engineer, and to satisfy himself before leaving port that there is sufficient coal for the voyage.

To have an intelligent grasp of the general run of pipes and connexions in the engine-room, the marking of cocks, the opening and closing of cocks and valves, how mistakes of importance may be made in the confusion of an accident, and how best to guard against such mistakes.

To be capable of being left in charge of the feeding of a set of boilers, to understand the working of the water-gauge, and to be able to guard against being misled by false indications of the gauge glass.

To understand about blowing down and surfacing, the reasons for doing so, and the danger which may result from the neglect of these under certain circumstances.

A master or mate presenting himself for examination in steam must be understood to have made up for his want of practical experience by reading up about the steam-engine. He ought, therefore, to show that he has given his mind to intelligently understanding the *rationale* of the action of the steam-engine Under this head he should, therefore, be able to state approximately the quantity of heat required in the formation of steam, the remarkable relation of "latent" heat to "sensible" heat, how much steam can be raised by the combustion of one pound of coal, what horse-power measure is, what indicated horse-power is, what is the action of the slide-valve, the course of the steam through the engine, and the advantage of working expansively, and how the expansive action is shown by the indicator diagram To know the uses of the various parts of the engines and dynamos used for electric lighting, and how they and the cables are fitted in the hull; how wires are jointed, insulated, and cased; why it is desirable that they should be led along places which are dry and accessible; what is "sparking," and what are the causes which produce it; what is its danger in coal bunkers and petroleum-carrying steamers; what are the uses of switches and cut-outs, and why is it so important to prevent short-circuiting taking place

The candidate has has to answer in writing 16 out of 20 questions selected from the Elementary Questions (*see* Appendix C).

Selections for this examination are given on the alphabetic sheet for "Steam" Generally, these answers are given by candidates as learned by rote from a book; the candidate should therefore be asked such *viva voce* questions as will necessitate his giving his answers in different words, so as to discover whether he has the root of the matter in him.

The principal part of the *viva voce* is the examination on board a steamer, preferably one with which he is unacquainted. He is told to look about and try to find out the run of the machinery without the assistance of anyone: the Examiner to be in the engine-room to see that this independent examination is properly carried out. When the candidate reports that he thinks he knows the whole arrangement of the machinery, the Examiner will then question him on the uses of the parts, get him to point out the different cylinders, pumps, valves, condenser, &c.; also the dynamo, its field-magnets, armature, commutators, brushes, cables, &c. He must show that he understands the run of the pipes in the bilges, not necessarily that he has gone over every one of them, but he ought to be directed to trace, at least, one important range of pipes, and to thoroughly satisfy the Examiner that he could be safely trusted to manipulate the valves or cocks in connexion therewith. It will not often be practicable for the candidate to be asked to actually work engines under steam, but he must satisfy the Examiner that he knows how to do so, and that he is aware what precautions have to be taken in regard to water in the cylinder, &c. It is most important that a candidate should show that, in the event of an accident depriving him of the assistance of engineers, he knows what to do to safely take his vessel to an anchorage, or to stop the engines and proceed under sail alone.

The examination of a mate in steam is the same as that of a master. The knowledge required has no reference to the mate's position. A mate may be examined, but such examination implies that the mate will one day be a master, when the possession of the knowledge will be an advantage to him in the discharge of his duties as master.

APPENDIX F.

FORMS USED IN THE EXAMINATIONS OF ENGINEERS.

Exn. 1*a*. Regulations.
Exn. 3. Application to be examined.
Exn. 10*d*. Face sheet, Second Class.
Leaves 201, &c., Second Class, 10 A M. to noon.
Leaves 311, &c, Second Class, 12 to 2.
Leaves 411, &c., Second Class, 2 to 4.
Exn 11*d*. Face sheet, First Class.
Leaves 261, &c., First Class, 10 to 12.
Leaves 361, &c, First Class, 12 to 2.
Leaves 461, &c, First Class, 2 to 4
Exn. 15*d*. Second Class, data sheet for a set of papers.
Exn. 15*e*. First Class, data sheet for a set of papers. A corner is cut off the First Class papers to prevent mixing the papers accidentally.
Exn 15*b*. The form for elementary questions used on the second day of the examination by candidates for second class, and on either the second or the third day by candidates for first class. Candidates who have time between working the arithmetical papers on the first day are allowed to go on with the elementary questions on 15*b*. The questions are contained in Exn. 1*a*
Leaflet Alphabetical lines of numbers of the elementary questions for first class, second class, and masters and mates in steam.

Exn. 17—*a*, *b*, *c*, &c.
Subjects for examination in rough working drawing.
The candidates bring their own instruments; the office supplies drawing boards, paper and squares.
Exn. 16. Examiner's authority.
Exn. 15. Examiner's Report.
Exn. 37. For reporting the names of Candidates under examination.

APPENDIX G.

Form of Certificate for Indian Coasting Voyages as required by paragraph 29.

Seaman discharged from _____ *in a British Possession abroad.*

Name and official number of ship.	Port of registry.	Tonnage.	Description of voyage or employment.*
1	2	3	4

Name of seaman.	Place of birth.	Date of birth.	No. of fund ticket (if any).	Capacity.	Date of entry.	Date of discharge.	Place of discharge.
1	2	3	4	5	6	7	8

		Date of sailing from Home Port.	Date of arrival at Home Port.
Character for conduct.	Character for ability.		

I certify that the above particulars are correct, and that the abovenamed seaman was discharged accordingly.

Dated this _____ *day of* _____ *19*__.

_____ *Seaman.* _____ *Master.*

*Such as—Coasting.—Calcutta to Bombay and back to Calcutta.
Coasting.—Bombay to Madras.

BENGAL.

Government of Bengal.

By the Honourable the Lieutenant-Governor of Bengal.

In accordance with Her Late Majesty's Order in Council of the 29th June 1882, issued under section 8 of the Merchant Shipping (Colonial) Act, 1869.

Colonial Certificate of Competency

AS

FIRST CLASS ENGINEER.

To _____

Whereas *it has been reported to the Lieutenant-Governor that you have been found duly qualified to fulfil the duties of FIRST CLASS ENGINEER in the Merchant Service, I do hereby, in pursuance of Act VII of 1884, grant you this Certificate of Competency.*

By order of the Government of Bengal.

this _____ *day of* _____ *19*__.

Assistant Secy. to the Govt. of Bengal.

BENGAL.

No. of Certificate

*Address of Owner*_____

*Date and place of Birth*_____

*Signature*_____

*This Certificate is given upon an ORDINARY EXAMINATION passed at*_____ *on the*_____ *day of*_____ *19* .

Any ENGINEER who fails to deliver up a Certificate which has been cancelled or suspended is liable to a penalty not exceeding Rs. 500. This Certificate is liable to be cancelled or suspended by any Court or Tribunal which has power under the Imperial Act 25 and 26 Vic., Cap. 63, Sec. 23, to cancel or suspend Certificates.

N.B.—Any person other than the owner thereof becoming possessed of this Certificate is required to transmit it forthwith to the Port Officer, Calcutta

*Issued at the Port of Calcutta on the*_____ *day of*_____ *19* .

Registered,
Port Officer of Calcutta.

BENGAL.

Government of Bengal.

By the Honourable the Lieutenant-Governor of Bengal.

In accordance with Her Late Majesty's Order in Council of the 29th June 1882, issued under section 8 of the Merchant Shipping (Colonial) Act, 1869.

Colonial Certificate of Competency
AS
SECOND CLASS ENGINEER.

To_____

Whereas *it has been reported to the Lieutenant-Governor that you have been found duly qualified to fulfil the duties of SECOND CLASS ENGINEER in the Merchant Service, I do hereby, in pursuance of Act VII of 1884, grant you this Certificate of Competency.*

By order of the Government of Bengal.

*this*_____ *day of*_____ *19*____.

Assistant Secy. to the Govt. of Bengal.

BENGAL.

No. of Certificate

*Address of Owner*_____

*Date and place of Birth*_____

*Signature*_____

*This Certificate is given upon an ORDINARY EXAMINATION passed at*_____ *on the*_____ *day of*_____ *19*0____.

Any ENGINEER who fails to deliver up a Certificate which has been cancelled or suspended is liable to a penalty not exceeding Rs. 500. This Certificate is liable to be cancelled or suspended by any Court or Tribunal which has power under the Imperial Act 25 and 26 Vic., cap. 63, sec. 23, to cancel or suspend Certificates.

N.B.—Any person other than the owner thereof becoming possessed of this Certificate is required to transmit it forthwith to the Port Officer, Calcutta.

*Issued at the Port of Calcutta on the*_____ *day of*_____ *19* .

Registered,
Port Officer of Calcutta.

CIVIL MEDICAL DEPARTMENT, BENGAL.

No. 2614D., dated the 8th September 1902.—Assistant Surgeon Gouri Prosad Bhuttacharjee is appointed to do supernumerary duty at the Medical College Hospital, Calcutta, with effect from the 28th August 1902.

No. 2617D., dated the 8th September 1902.—Assistant Surgeon Gouri Prosad Bhuttacharjee held charge of the duties of Inspector of the Central Animal Vaccination Depôt, Calcutta, from the afternoon of the 28th July to the forenoon of the 27th August 1902.

No. 2668D., dated Darjeeling, the 9th September 1902.—Assistant Surgeon Poorno Chunder Singh, of the Contai Subdivision and Dispensary, in the Midnapore district, is appointed to the Burdwan Charitable Dispensary, with effect from the 6th August 1902, *vice* Assistant Surgeon Abhaya Kumar Sen, retired.

No. 2671D., dated Darjeeling, the 9th September 1902.—Assistant Surgeon Narendra Nath Mukerjee did supernumerary duty at the Medical College Hospital, Calcutta, from the 24th June to the 22nd July 1902, both days inclusive.

No. 2674D., dated Darjeeling, the 9th September 1902.—Assistant Surgeon Narendra Nath Mukerjee is appointed temporarily to the Contai Subdivision and Dispensary, in the Midnapore district, until further orders, with effect from the 1st August 1902.

T. H. HENDLEY, COL., I.M.S.,
Inspector-General of Civil Hospitals, Bengal.

NOTIFICATION.

Examination of Compounders at the Orissa Medical School.

IN accordance with the Government of Bengal Notifications Nos. 4042Medl., dated 2nd November 1896, and No. 288Medl., dated 17th January 1902, notice is hereby given that the next half-yearly examination of Compounders will begin at 8 A.M. on Tuesday, the 21st October 1902, at the Medical School, Cuttack.

2. Every candidate must produce a certificate of training and a certificate of age and previous education as required by Rule 9 (*vide* Government of Bengal Notification No. 4042-Medl., dated 2nd November 1896, published in the *Calcutta Gazette* of the 4th November 1896, and circulated by the Inspector-General of Civil Hospitals, Bengal, to all Civil Surgeons, Superintendents of Medical Schools, Lunatic Asylums and Calcutta Hospitals with his Circular No. 60, dated 5th December 1896).

3. All male candidates either belonging to the Compounder class of the Vernacular Medical Schools or to the outside dispensaries must forward to the Superintendent, Medical School, Cuttack, an examination fee of Rs. 5 at least one week before the 21st October 1902.

Female candidates will be examined free of charges.

4. Should any candidate fail to pass the examination, he will forfeit his fee.

NOTE.—The attention of candidates is drawn to Rules 9, 10 and 12 (*a*) and (*b*), and of the persons granting the certificates to Rules 11 and 14 (3) and (4), and to the certificate, Forms C and D, in the schedule of the Government of Bengal's aforesaid Notification No. 4042Medl., dated 2nd November 1896.

J. T. CALVERT, M.B. (LOND.), MAJOR, I.M.S.,
Superintendent, Orissa Medical School, Cuttack.

CUTTACK, *the 9th September 1902.*

TREASURY NOTICES.

UNCOVENANTED DEPUTY COLLECTOR BABU KSHITISH CHUNDER SARKAR has been placed in charge of the Pabna Treasury from the 20th of August 1902, *vice* Maulvi Syed Abdus Salek, and authorized to draw bills on other Treasuries.

C. R. MARINDIN, *Commissioner.*

COMMR.'S OFFICE, RAJSHAHI DIVN., DARJEELING, *the 8th September 1902.*

BABU SASI MOHON TALUKDAR, Deputy Collector, has been placed in charge of the Backergunge Treasury from the forenoon of the 8th instant, and is authorized to draw bills on other Treasuries.

GUNGA N. ROY, *Pers. Asst.*, for *Commissioner.*

DACCA COMMR.'S OFFICE, *the 9th September 1902.*

UNCOVENANTED DEPUTY COLLECTOR BABU MANMATHA KUMAR BOSE has been placed in charge of the Bogra Treasury from the 22nd of August 1902, and is authorised to draw bills on other Treasuries.

C. R. MARINDIN, *Commissioner.*

COMMR.'S OFFICE, RAJSHAHI DIVN., DARJEELING, *the 9th September 1902.*

UNCOVENANTED DEPUTY COLLECTOR MAULVI SYED ALI MAZHAR is placed in charge of the Champaran Treasury, and is authorized to draw bills on other Treasuries.

E. F. GROWSE, *Offg. Commissioner.*

PATNA COMMR.'S OFFICE, BANKIPORE, *the 11th September 1902.*

UNCOVENANTED DEPUTY COLLECTOR BABU NARENDRA KUMAR CHAUDHURI is hereby placed in charge of the Midnapore Treasury, *vice* Babu Jogendra Nath Bandopadhya, transferred, and is authorised to draw bills on other Treasuries with retrospective effect from the 3rd September 1902.

RAJ MOHAN CHUCKERBUTTY, *Persl. Asst.*, for *Commr. on tour.*

COMMR.'S OFFICE, BURDWAN DIVN., CHINSURA, *the 12th September 1902.*

Sheriff's Office, the 17th September 1902.

NOTICE is hereby given that the Fifth Criminal Sessions of the year 1902 of the High Court of Judicature at Fort William in Bengal, for the Town of Calcutta and Factory of Fort William, and the places subordinate thereto, will be held at the Court-house, in the Town of Calcutta, on Monday, the first day of December next, at 11 o'clock in the forenoon, and thence forward from day to day until the said Sessions be over. And it is hereby proclaimed that all persons who are to prosecute any of the prisoners to be brought up for trial at the said Sessions be present then and there to prosecute.

H. M. RUSTOMJEE, *Sheriff.*

সরিফ আফিস, সন ১৯০২ সাল তারিখ ১৭ই সেপ্টেম্বর।

সকলকে সমাচার দেওয়া যাইতেছে যে হুবে বাঙ্গালার কোর্ট উইলিয়ম দুর্গের অধীন শহর কলিকাতার ও অন্যান্য স্থানের ফৌজদারী বিচার নিষ্পত্তি জন্য আগামী সন ১৯০২ সালের ১লা ডিসেম্বর সোমবার বেলা ১১ ঘটিকার সময় এবং যে পর্য্যন্ত সেশিয়ানের কার্য্য শেষ না হয় প্রতিদিন উক্ত সময়ে কলিকাতার হাইকোর্টের আপন আদালত ঘরে সন ১৯০২ সালের পঞ্চম ক্রিমিনেল সেশিয়ান বসিবেক এবং এতদ্দ্বারা প্রচার করা যাইতেছে যে, যে সকল ব্যক্তি কোন কয়েদির বিরুদ্ধে ফৌজদারী মিছিল করিবেক তাহারা উক্ত স্থানে উক্ত সময়ে হাজির থাকিয়া মোকদ্দমা করে ইতি।

এইচ্, এম্, রুস্তমজী, সরিফ।

SMALL CAUSE COURT NOTICE.

NOTICE is hereby given, under section 7 of Act IX of 1887, that the Judge of the Small Cause Courts of Dacca and Munshigunge will, in the month of November 1902, sit in those Courts on the undermentioned dates, Sundays and holidays excepted :—

Dacca Small Cause Court	...	6th, 7th, 11th, 12th, 25th and 26th of November 1902.
Munshigunge Small Cause Court	...	From the 18th to the 22nd of November 1902.

SRINATH PAL, *Judge, Small Cause Court.*

DACCA SMALL CAUSE COURT, *the 18th September 1902.*

EDUCATION DEPARTMENT, BENGAL.

Subordinate Educational Service.

The 5th September 1902.—Mr. E. Cleghorn, Assistant Head Master, Anglo-Persian Department of the Calcutta Madrasah (Class II), is allowed combined leave for two years, namely, three months under Article 306 (*b*) and the remaining period under Article 371 of the Civil Service Regulations, with effect from the date on which he may avail himself of it.

The 8th September 1902.—The orders of the 11th July 1902, granting Maulvi Kabiruddin Ahmad, B.A., Deputy Inspector of Schools, Faridpur (Class IV), leave of absence for thirty-one days, under Article 291 of the Civil Service Regulations, with effect from the 12th July 1902, are cancelled.

The 10th September 1902.—Babu Anil Chandra Gupta, B A., an Assistant Master, Murshidabad Nawab's High School (Class VII), is appointed to be Assistant Head Master of the Jessore Zilla School, on the pay of his own grade, *vice* Babu Monmohan Chakravarti, transferred.

Babu Suresh Chandra Mukerjea, B.A., an Assistant Master in the Chittagong Collegiate School (Class VIII), is appointed to be an Assistant Master in the Hazaribagh Zilla School, *vice* Babu Pramatha Nath Bhattacherjea, promoted.

This cancels the orders of the 11th July 1902, appointing on probation Babu Baikuntha Chandra Ray, M.A., to be an Assistant Master in the Hazaribagh Zilla School and substantively *pro tempore* to Class VIII, *vice* Babu Pramatha Nath Bhattacherjea.

A. PEDLER,
Director of Public Instruction, Bengal.

THE ELLIOTT PRIZE FOR SCIENTIFIC RESEARCH FOR 1902.

WITH reference to Notification No. 5058F. in the *Calcutta Gazette* of the 28th December 1892, Part I, page 1172, the ELLIOTT PRIZE FOR SCIENTIFIC RESEARCH will be given this year to the author of the best original essay composed during the year 1902, giving the results of original research or investigation by the essayist on *Natural History*.

2. Any native of Bengal, including any Eurasian or domiciled European residing in Bengal, may compete for the prize.

3. The essays of competitors *must be* sent in to the President of the Bengal Asiatic Society, 57 Park Street, Calcutta, by the end of December 1902. The prize will be adjudged to the best competitor, and awarded publicly at the Annual General Meeting of the Asiatic Society in February 1903.

Preference will be given to researches leading to discoveries likely to develop the industrial resources of Bengal. In the case of no essay being deemed by the Trustees to be of sufficient merit, no prize is to be awarded, but the amount is to be retained, so that in any future year two or more prizes may be given, or the prize may be enhanced in the case of an exceptionally good essay.

C. W. BOLTON,
President of the Asiatic Society of Bengal.

T. RALEIGH,
Vice-Chancellor of the Calcutta University.

CALCUTTA;
The 30th August 1902.

ALEX. PEDLER,
Director of Public Instruction, Bengal.

Office Memorandum by the Inspector of Schools, Burdwan Division.

UNIVERSITY ENTRANCE EXAMINATION.

PRIVATE STUDENTS.

1. *Private students* are those who do not appear from any school or who have been transferred from one school to another after the 31st August without the consent of the Inspector. The term "private students" includes *schoolmasters*.

2. Private students must appear at the test examination of one of the following institutions:—

Those from the—	At the test examination of—	Date of test examination.
1	2	3
1. Howrah district ...	Howrah Municipal School ...	To be fixed by the Headmaster
2. Bankura " ...	Bankura Zilla School ...	15th December 1902.
3. Birbhum " ...	Birbhum ditto ...	15th " "
4. Midnapore " ...	Midnapore Collegiate School ...	18th " "
5. Hooghly " ...	Uttarpara Government School ...	15th " "
	Hooghly Branch School ...	15th " "
6. Burdwan " ...	Burdwan Raj Collegiate School (with the Principal's permission).	15th " "

The examinations will begin as stated above, and each private student will pay a fee of Rs. 2 to the head of the institution at which he appears for examination. The balance, after payment of expenses (stationery, etc.), will go as remuneration to the examiners. No

private student will be admitted to the test examination unless accompanied, for the purpose of identification, by some person known to the Headmaster of the institution at which he appears.

3. Applications for permission to appear must be sent so as to reach *this office* not later than the 24th November, with the following information, etc.:—

(*a*) The name of the school in which the candidate last studied
(*b*) The transfer certificate (in original) granted to the candidate from the same; or,
(*c*) in the case of a candidate who previously appeared at the Entrance examination, the Registrar's receipt (in original) for the fee paid.
(*d*) Age of the candidate.
(*e*) In the case of schoolmasters, a certificate of good conduct from the secretary or proprietor of the school in which the candidate is serving.

4. If this office is satisfied that all is in order the Inspector will countersign and return the application, and this then will be the candidate's passport for admission *to the test examination.*

5. The Headmaster of an institution (one of those named above) should direct private students to appear before him not later than the 11th January with their applications for admission to the Entrance examination; and in thecase of those candidates who have satisfied the test, he will cause them to sign their application forms in his presence, and will grant the necessary certificates, and then forward the applications to this office for countersignature, after which they will be sent by the Inspector *direct* to the candidates

6. Expedition is necessary in carrying out all these instructions, and candidates should be *most careful* to give their names and addresses written legibly and distinctly, so that no mistake may be likely to occur.

7. *Under no circumstances should the entrance fee be sent to this office*, but it should be sent to the Registrar by the candidates themselves, together with the countersigned applications, which will be returned to the respective Headmasters for delivery to candidates.

8. Private students will understand that the test examination of any schools other than those named above will not be accepted by this office.

9 Addresses of private students should be supplied to this office.

10. The Entrance examination in 1903 will be held on the 2nd March 1903 and following days. Applications and fees for admission must reach the office of the Registrar on or before the 22nd January 1903.

F.A. AND B.A. EXAMINATIONS.

1. Deputy Inspectors of Schools Sub-Inspectors of Schools and *bonâ fide* masters of English schools who have served as such for the full period of two academical years, or of six months after the examination of the same class last held by the University in the case of those only who were admitted to a former examination of that class, will be admitted to the abovementioned examinations.

2. Candidates for the F.A. and B.A. examinations must produce certificates of character and length of service from the Secretaries of their respective schools, together with their *Entrance* or *F.A.* certificates. Those candidates who have been admitted to a former examination must produce the Registrar's receipt in addition.

3. The printed form of application should be carefully filled up and submitted to this office *on or before the 15th January 1903*, together with other papers as mentioned in rule 2, after which no applications will be received.

4. By *bonâ fide* masters of schools are to be understood masters who hold regularly paid appointments in English schools, teaching at least the M E. course.

5. The F.A. and B.A. examinations in 1903 will be held on the 16th March 1903 and following days The applications and fees for admission must reach the office of the Registrar on or before the 2nd February 1903.

CALCUTTA UNIVERSITY

NOTICE.

MAHAMAHOPADHYAY CHANDRAKANTA TARKALANKAR, Sree Gopal Basu Mallik Fellow, will hold an examination on the subject of the lectures delivered by him during the fourth year of his appointment, at the Senate House, College Square, on Monday, the 1st December, 1902, at 10 A.M.

The examination will be open to all Under-Graduates of this University and to all Graduates thereof of not more than five years' standing

A gold medal will be awarded to the candidate who stands first in the examination.

Candidates who intend to appear at the examination must submit their applications to the Registrar on or before the 28th November, 1902.

K C. BANURJI,
Offg. Registrar, Calcutta University.

SENATE HOUSE, *the 15th September 1902.*

A.

Statement of stipends awarded to pupils and to teachers on the results of the Sanskrit First Examination, 1902, held by different Associations under the rules prescribed in Government Resolution No. 857, dated the 21st March 1892, Notification No. 4236, dated the 29th December 1896, Notification No. 1409, dated the 31st March 1896, and the Director of Public Instruction's Rules for the distribution of stipends to pupils and teachers, dated the 18th January 1901.

Held on the 28th February and 1st March 1902.

Sixty stipends to pupils at Rs. 2 a month for two years.
Twenty-five stipends of Rs. 6 a month, 25 stipends of Rs. 8 a month, and 4 Harakumar Tagore Tol stipends of Rs. 4 a month, are awarded to teachers (tenable for one year).

Name of Association.	Students.				Stipends to pupils.								Stipends to teachers.										Remarks.
	Number of students presented.		Number of students passed.		Available for merit at Rs. 2.		Available for backward localities		Stipends on proportion to passes under different Associations.		Reserved for Orissa.	Total.	Available for merit at Rs. 8.		Available for backward localities at Rs. 6.	By adding up marks.		Reserved for Bihar.		Reserved for Orissa at Rs. 6.	Harakumar Tagore Tol stipend at Rs. 4.	Total.	
	Kavya and Grammar.	Higher subjects.	Kavya and Grammar.	Higher subjects.	Kavya and Grammar.	Higher subjects.	Kavya and Grammar.	Higher subjects.	Kavya and Grammar.	Higher subjects.			Kavya and Grammar.	Higher subjects.		At Rs. 8.	At Rs. 6.	At Rs. 8.	At Rs. 6.				
1	2	3	4	5	6	7	8	9	10	11	12	13	14	15	16	17	18	19	20	21	22	23	24
Dacca	88	28	16	4	1	...	...	...	..	1	...	2	1	1	.	..	...	...	...	...	...	2	
Bihar Sanskrit Sanjivan	382	68	68	11	...	...	...	...	2	4	...	6	...	..	2	1	...	1	1	....	...	5	
Ghatal Sanskrit Samiti	492	63	122	14	1	1	...	...	4	5	...	11	1	1	2	2	4	...	...	...	...	10	
Navadwipa Bibudha Janani Sabha ..	75	31	25	12	...	..	...	...	1	4	...	5	1	...	...	1	...	...	...	...	...	2	
Bhatpara Pariksha Sabha	70	13	34	7	...	1	...	..	1	2	..	4	1	1	...	..	1	...	...	...	...	3	
Calcutta Pandit Sabha	365	67	56	16	...	1	...	...	2	6	...	9	..	3	...	...	...	...	...	...	4	7	
Rangpur Dharma Sabha	40	6	10	1	...	...	...	1	...	...	...	1	..	...	1	...	...	...	...	...	...	1	
Barisal Dharmarakshini Sabha ...	116	7	28	3	...	...	...	...	1	1	...	2	...	...	1	1	1	...	...	...	...	3	
Orissa Sanskrit Samiti, Cuttack ...	45	5	14	5	...	...	...	...	...	2	1	3	...	...	...	...	...	...	...	1	...	1	
Balasore Sanskrit Samiti	52	3	22	1	...	...	...	...	1	...	1	2	...	...	...	...	1	...	...	1	...	2	
Puri Jagannath Samiti	60	...	13	...	...	...	...	...	...	...	1	1	...	...	...	...	...	...	...	1	...	1	
Narail Vidyotsahini Sabha	89	17	28	5	...	1	...	...	1	2	...	4	...	...	1	3	1	...	...	...	...	5	
Kotwalipara Aryya Siksha Samiti ...	16	11	6	6	...	...	...	...	...	2	...	2	...	...	1	1	...	...	...	...	...	2	
Bakla Aryya Sammilani Sabha ...	61	7	18	2	...	...	...	1	...	...	...	1	...	...	...	2	...	...	...	...	...	2	
Bannafair Sanskrit Association ...	38	2	14	...	...	...	1	...	...	...	...	1	...	...	...	...	1	...	...	...	...	1	
Idilpur Hitaishini Sabha	83	18	5	...	...	...	...	...	...	...	...	...	...	...	...	1	...	...	...	...	...	1	
Chittagong Vidyavinodini Sabha ...	68	1	25	...	..	...	1	...	1	...	...	2	..	...	...	...	1	...	...	...	...	1	
Mymensingh Dharma Sabha	47	6	20	2	...	...	...	1	..	...	...	1	...	...	1	...	1	...	...	...	...	2	
Berhampur Pandit Sabha	66	11	21	4	...	...	...	...	1	1	...	2	..	...	...	1	...	...	...	...	...	1	
Noakhali Suhrid Sammilani Sabha ...	35	1	19	1	...	...	...	1	...	...	...	1	...	...	1	1	...	...	...	...	...	2	
Total ...	2,278	365	561	94	2	4	2	4	15	30	3	60	4	6	10	14	11	1	1	3	4	54	

CALCUTTA,
The 16th September 1902.

A. PEDLER,
Director of Public Instruction, Bengal.

B.

Statement of stipends awarded to pupils and to teachers on the results of the Sanskrit Second Examination, 1902, held by different Associations under the Rules prescribed in Government Resolution No. 857, dated the 21st March 1892, Notification No. 4236, dated the 29th December 1896, and Notification No. 1409, dated the 31st March 1896, and the Director of Public Instruction's Rules for the distribution of stipends to pupils and teachers, dated the 18th January 1901.

Held on the 28th February and 1st March 1902.

Twenty stipends of Rs 3 a month and 15 stipends of Rs. 4 a month, tenable for two years, and four Nyaya stipends of Rs. 3 a month, tenable for three years, are awarded to pupils.
Eighteen stipends of Rs. 10 a month, 16 stipends of Rs. 12 a month, three Harakumar Tagore Tol stipends of Rs. 5 a month, and two Harakumar Tagore Tol stipends of Rs. 6 a month (tenable for one year) are awarded to teachers.

Name of Association.	Students.				Stipends to pupils.											Stipends to teachers.													Remarks.
	Number of students presented.		Number of students passed.		Available for merit at Rs. 4.		Available for backward localities at Rs. 3.		Stipends in proportion to passes under different Associations.				Reserved for Orissa at Rs. 3.	Reserved for Nyaya at Rs. 3 for three years.	Total.	Available for merit at Rs. 12.		Available for backward localities at Rs. 10.	By adding up marks.		Reserved for Nyaya.		Reserved for Bihar.		Reserved for Orissa at Rs. 10.	Harakumar Tagore Tol stipend.		Total.	
	Kavya and Grammar.	Higher subjects.	Kavya and Grammar.	Higher subjects.	Kavya and Grammar.	Higher subjects.	Kavya and Grammar.	Higher subjects.	Kavya and Grammar at Rs. 3.	Higher subjects at Rs. 3	Kavya and Grammar at Rs. 4.	Higher subjects at Rs. 4.				Kavya and Grammar.	Higher subjects.		At Rs. 10.	At Rs. 12.	At Rs. 10.	At Rs. 12.	At Rs. 10.	At Rs. 12.		At Rs. 5.	At Rs. 6.		
1	2	3	4	5	6	7	8	9	10	11	12	13	14	15	16	17	18	19	20	21	22	23	24	25	26	27	28	29	30
Dacca	32	11	19	1	...	...	...	...	1	...	...	...	...	...	1	...	...	...	...	...	...	...	...	...	...	...	...	...	
Bihar Sanskrit Sanjivan	262	16	65	13	...	...	...	...	2	2	2	2	...	...	8	...	...	1	...	1	...	...	1	1	...	...	...	4	
Ghatal Sanskrit Samiti	108	20	26	2	...	...	...	...	1	...	1	...	...	...	2	...	...	...	...	2	...	...	...	...	...	...	...	2	
Navadwip Bibudha Janani Sabha ...	31	22	16	11	...	...	...	...	...	1	...	2	...	3	6	1	...	...	...	1	1	...	...	...	...	...	...	3	
Bhatpara Parikshe Sabha	31	13	10	5	...	...	...	...	...	1	...	1	...	...	2	...	1	...	1	1	...	...	...	...	...	...	...	3	
Calcutta Pandit Sabha	144	26	32	11	...	2	...	...	1	1	1	2	...	...	7	...	2	...	2	...	...	...	...	...	...	3	2	9	
Rangpur Dharma Sabha	17	3	8	1	...	...	...	1	...	...	...	...	...	...	1	...	...	...	...	...	...	...	...	...	...	...	...	1	
Barisal Dharmarakshini Sabha ...	39	5	15	1	...	...	...	...	...	...	...	...	...	...	...	...	...	1	...	...	...	...	...	...	...	...	...	1	
Orissa Sanskrit Samiti, Cuttack ...	12	1	9	1	...	...	...	...	...	...	...	...	1	...	1	...	...	...	...	1	...	...	...	...	1	...	...	2	
Balasore Sanskrit Samiti	9	1	7	1	...	...	...	...	...	...	...	...	1	...	1	...	...	...	...	1	...	...	...	...	1	...	...	2	
Puri Jagannath Samiti	14	1	16	1	...	...	...	...	...	...	...	...	1	...	1	...	...	...	1	...	...	...	...	...	1	...	...	2	
Narail Vidyotsahini Sabha	26	8	11	7	...	...	...	...	...	1	...	1	...	1	3	...	...	...	...	1	...	1	...	...	...	...	...	2	
Kotwalipara Aryya Siksha Samiti ...	14	3	7	...	...	...	...	...	...	...	...	...	...	...	...	...	...	...	1	...	...	...	...	...	...	...	...	1	
Sakta Aryya Sammilani Sabha ...	18	1	12	...	...	...	...	...	...	...	...	...	...	...	...	...	...	...	1	...	...	...	...	...	...	...	...	1	
Bangiya Sanskrit Association ...	14	2	4	2	...	...	...	...	...	1	...	...	...	...	1	...	...	...	1	...	...	...	...	...	...	...	...	1	
Idilpur Hitaishini Sabha	34	5	16	4	1	...	...	...	...	1	...	...	...	...	2	1	...	...	...	...	...	...	...	...	...	...	...	1	
Chittagong Vidyavinodini Sabha ...	8	...	1	...	...	...	1	...	...	...	...	...	...	...	1	...	...	1	...	...	...	...	...	...	...	...	...	1	
Mymensingh Dharma Sabha ...	11	3	...	2	...	...	...	1	...	...	...	...	...	...	1	...	...	1	...	...	...	...	...	...	...	...	...	1	
Berhampur Pandit Sabha	37	15	10	4	...	...	...	...	...	1	...	...	...	...	1	...	1	...	...	...	...	...	...	...	...	...	...	*1	
Nadiah Suhrid Sammilani Sabha ...	7	...	1	...	...	...	...	...	...	...	...	...	...	...	...	...	...	1	...	...	...	...	...	...	...	...	...	1	
Total ...	868	156	285	67	1	2	1	2	5	9	4	8	3	4	39	2	4	6	7	8	1	1	1	1	3	3	2	39	

CALCUTTA,
The 16th September 1902

A. PEDLER,
Director of Public Instruction, Bengal.

C.

Stipends awarded to pupils on the results of the Sanskrit First Examination, 1902, held by different Associations under the rules prescribed in Government Resolution No. 857, dated the 21st March 1892; Notification No. 4236, dated the 29th December 1896; Notification No. 1409, dated the 31st March 1896; and Director of Public Instruction's Rules for the distribution of Stipends to pupils and teachers, dated the 18th January 1901.

FOR MERIT.

Name of Stipend-winner.	Name of Teacher.	Residence or Institution, name of Association, and District.			Monthly amount of Stipend.	Period for which tenable.	Name and Residence of Teacher with whom the Stipend-winner purposes to continue study.			Kavya and Grammar.	Higher Subject.	Remarks.
		Residence or Institution.	District.	Name of Association.			Name of Teacher.	Residence or Institution.	District.			
1	2	3	4	5	6	7	8	9	10	11	12	13
					Rs.	Years.						
Indranarain Bandyopadhyaya.	Umes Chandra Vidyabhushan.	Sunyakone ..	Midnapore ...	Sanskrit Samiti, Ghatal.	2	2	Umes Chandra Vidyabhushan.	Sunyakone ...	Midnapore ...	Grammar Sankahiptasar.		
Bidhubhushan Sen Gupta.	Kula Chandra Siddhantabhushan.	Machuakhal ..	Tippera ...	Dacca ...	2	2	Kula Chandra Siddhantabhushan.	Machuakhal ...	Tippera ...	Kavya.		
Kalijay Bhattacharyya.	Janaki Nath Tarkaratna	Korakdi ...	Faridpur ...	Vidyotsahini Sabha, Narail.	2	2	Janaki Nath Tarkaratna.	Korakdi ...	Faridpur ...	...	Sankhya.	
Yogendranath Bhattacharyya.	Prasanna Kumar Tarkanidhi.	Barahanagore ...	24-Parganas ...	Pandit Sabha, Calcutta.	2	2	Prasanna Kumar Tarkanidhi.	Barahansgore ...	24-Parganas...	...	Ditto ...	Under the Deputy Inspector of Schools, Calcutta.
Sasisekhar Smritiratna.	Harinath Vedantavagisa	Bijaya Chatuspathi ...	Burdwan ...	Pariksha Sabha, Bhatpara.	2	2	Harinath Vedantavagis.	Bijaya Chatuspathi, Burdwan.	Furdwan ...	...	Upanishad.	
Ramamrita Bhattacharyya.	Haran Chandra Tarkavagisa.	Khunberia ...	Midnapore ...	Sanskrit Samiti. Ghatal.	2	2	Haran Chandra Tarkavagisa.	Khunberia ...	Midnapore ...	...	Puran.	

FOR BACKWARD LOCALITIES.

					Rs.	Years.						
Mohinimohan Mitra	Panchanan Kaviratna ...	Binnafair ...	Mymensingh ...	Sanskrit Association, Binnafair	2	2	Panchanan Kaviratna	Binnafair ...	Mymensingh	Mugdhabodha.		
Chintaharan Brahmachari.	Sasanka Mohan Kavyatirtha.	Jagatpur, Asram ...	Chittagong ...	Vidyavinodini Sabha, Chittagong.	2	2	Sasanka Mohan Kavyatirtha.	Jagatpur, Asram	Chittagong ...	Kalap.		
Sriprasanna Chakravarti.	Lalit Mohan Das Gupta	Kavindra College ...	Goila ...	Aryya Sammilani Sabha, Bakla.	2	2	Lalit Mohan Das Gupta.	Kavindra College, Goila.	Backergunge	...	Upanishad.	
Asutosh Bhattacharyya.	Yadaveswar Tarkaratna	Rangpur ...	Rangpur ...	Dharma Sabha, Rangpur.	2	2	Yadaveswar Tarkaratna.	Dharma Sabha, Rangpur.	Rangpur ...	...	Puran.	
Ganga Chandra [illegible].	Ramnath Smritikantha...	Muktagacha ...	Mymensingh ...	Dharma Sabha, Mymensingh.	2	2	Ramnath Smritikantha.	Muktagacha ...	Mymensingh	...	Smriti.	
[illegible] Krishna Bhattacharyya.	Annada Charan Tarkachudamani.	Noakhali ...	Noakhali ...	Suhrid Sammilani Sabha, Noakhali.	2	2	Annada Charan Tarkachudamani.	Noakhali ...	Noakhali ...	...	Sankhya.	

STIPENDS IN PROPORTION TO PASSES.

DACCA.

Name of Stipend-winner.	Name of Teacher	Residence or Institution, name of Association and District.			Monthly amount of Stipend.	Period for which tenable.	Name and Residence of Teacher with whom the Stipend winner purposes to continue study			Kavya and Grammar.	Higher subject.	Remarks.
		Residence or Institution.	District.	Name of Association.			Name of Teacher.	Residence or Institution.	District.			
1	2	3	4	5	6	7	8	9	10	11	12	13
Chandra Kanta Bhattacharyya.	Rasmohan Vidyaratna ...	Rajdia ...	Dacca ...	Dacca ...	Rs. 2	Years. 2	Rasmohan Vidyaratna.	Rajdia ...	Dacca ...	...	Smriti.	

BIHAR.

					Rs.	Years.						
Srikanta Pandeya ...	Umanath Misra ...	Tikari ...	Gaya ...	Bihar Sanskrit Sanjivan.	2	2	Umanath Misra ...	Tikari ...	Gaya ...	Saraswa'a Grammar.		
Sukdeva Pandeya ...	Sibnandan Tripathi ...	King Edward's Oriental College, Bankipur.	Patna ...	Ditto ...	2	2	King Edward's Oriental College.	Bankipur ...	Patna ...	Laghu-kaumudi		
Devi Prasad Misra ...	Harihar Sarma ...	Mansuk Roy's Pathsala, Patna.	Do. ...	Ditto ...	2	2	Harihar Sarma ...	Mansuk Ray's Pathsala, Patna.	Patna ..	...	Sankhya.	
Brahmadeva Pattak...	Raghunandan Tripathi...	Pramod Vidyalaya, Chapra.	Saran ...	Ditto ...	2	2	Raghunandan Tripathi	Pramod Vidyalaya, Chapra.	Saran ..	...	Do.	
Ramnarayan Misra...	Ditto ..	Ditto ...	Do. ...	Ditto ...	2	2	Ditto ...	Ditto ..	Do. ..	...	Upanishad.	
Bhagirath Jha ...	Yadunandan Misra ...	Udai	Darbhanga ...	Ditto ...	2	2	Yadunandan Misra ...	Udai ...	Darbhanga ...	...	Jyotish.	

SANSKRIT SAMITI, GHATAL.

					Rs.	Years.						
Pramatha Nath Tripathi.	Dwarkanath Nyaya-bhushan.	Mugberia ...	Midnapore ...	Sanskrit Samiti, Ghatal.	2	2	Dwarkanath Nyaya-bhushan.	Mugberia ...	Midnapore ...	Sankshiptasar.		
Nilkanta Misra ...	Ditto ...	Ditto ...	Ditto ...	Ditto ...	2	2	Ditto ...	Ditto ...	Ditto ...	Ditto.		
Bhaba Sankar Pahari	Ditto ...	Ditto ...	Ditto ...	Ditto ...	2	2	Ditto ...	Ditto ...	Ditto ...	Laghu-sank-shiptasar.		
Radhapada Adhikari	Bhutnath Bhattacharyya	Bhagwanpur ...	Ditto ...	Ditto ...	2	2	Bhutnath Bhatta-charyya.	Bhagwanpur ...	Ditto ...	Mugdha-bodh.		
Asutosh Chakravarti	Ramkamal Smritibhu-shan.	Manikpur ...	Ditto ...	Ditto ...	2	2	Ramkamal Smriti-bhushan.	Manikpur ...	Ditto ...	. .	Smriti.	

Ramnari Bhattacharyya.	Nibaran Chandra Smrititirtha.	Tarakeswar ...	Hooghly ...	Ditto ...	2	2	Nibaran Chandra Smritititirtha.	Tarakeswar ...	Hooghly ...	...	Smriti.	
Rajendra Bandyopadhyaya.	Sridhar Tarkabhushan ...	Paikmajitha ...	Midnapore ...	Ditto ...	2	2	Sridhar Tarkabhushan	Ditto ...	Do. ...	...	Do.	
Sarada Prasad Chakravarti.	Hem Chandra Smrititirtha.	Rajtol Mahishadal ...	Ditto ...	Ditto ...	2	2	Hem Chandra Smritititirtha	Rajtol Mahishadal.	Midnapore ...	...	Do.	
Ramnath Misra ..	Rameswar Tarkasiddhanta.	Bhemua ...	Ditto ...	Ditto ...	2	2	Rameswar Tarkasiddhanta.	Bhemua ...	Ditto ...	...	Do.	

NAVADWIP BIBUDHA JANANI SABHA.

					Rs.	Years.						
Bijaya Chandra Das	Yajneswar Tarkaratna ...	Teberia ...	Nadia ...	Bibudha Janani Sabha, Navadwip.	2	2	Dwarkanath Siroratna	Navadwip ...	Nadia .	Mugdhabodh.	...	
Sarat Chandra Bhattacharyya.	Jaynarayan Tarkaratna	Navadwip ...	Do. ...	Ditto ...	2	2	Jaynarayan Tarkaratna	Ditto ...	Do. ...	...	Nyaya.	
Tarapada Bhattacharyya.	Devendra Nath Smritiratna.	Samudragarh ..	Burdwan ...	Ditto ...	2	2	Devendra Nath Smritiratna.	Samudragarh ...	Burdwan ...	...	Upanishad	Received stipend of Rs. 2 last year, which should be cancelled from 1st September 1902.
Annadaprasanna Bhattacharyya.	Devi Prasanna Smritibhushan.	Belpukuria ...	Nadia ...	Ditto ...	2	2	Devi Prasanna Smritibhushan.	Belpukuria ...	Nadia ...	...	Smriti.	
Kali Krishna Bhattacharyya.	Jaynarayan Tarkaratna...	Navadwip ...	Do. ...	Ditto ...	2	2	Jaynarain Tarkaratna	Navadwip ...	Do. ...	...	Nyaya.	

BHATPARA PARIKSHA SABHA.

					Rs	Years					
Ramananda Chaudhuri.	Rajani Kanta Smritibhushan	Adwita Chatuspathi, Tiluri.	Bankura ...	Pariksha Sabha, Bhatpara.	2	2	Rajani Kanta Smritibhushan.	Adwita Chatuspathi, Tiluri.	Bankura ...	Mugdhabodh.	
Ramesa Chandra Chakravarti.	Hari Nath Vedantavagisa	Bijaya Chatuspathi ..	Burdwan ...	Ditto	2	2	Hari Nath Vedantavagisa.	Bijaya Chatuspathi, Burdwan.	Burdwan ...	...	Upanishad
Panchanana Bhattacharyya.	Bireswar Smritititirtha .	Bhatpara .	24-Parganas	Ditto	2	2	Bireswar Smritititirtha	Bhatpara ...	24-Parganas	...	Smriti.

CALCUTTA PANDIT SABHA.

					Rs.	Years					
Ram Chandra Bhattacharyya.	Sarada Charan Smritibhushan.	Sanskrit Tol, Mulajore	24-Parganas	Pandit Sabha, Calcutta.	2	2	Sarada Charan Smriti bhushan.	Sanskrit Tol, Mulajore.	24 Parganas	Mugdhabodh.	
Ram Chandra Sarkar	Gopal Chandra Kavyatirtha.	Pabna ...	Pabna ..	Ditto ...	2	2	Gopal Chandra Kavyatirtha.	Pabna ..	Pabna ...	Do.	
Narayan Chandra Mallik.	Chandi Charan Smritibhushan.	11-1 Garanhata Street	Calcutta ...	Ditto ...	2	2	Chandi Charan Smritibhushan.	11-1 Garanhata Street.	Calcutta ...	...	Smriti.
Panchanan Chakravarti, Kavyatirtha.	Panchanan Tarkaratna ...	Bhatpara	24-Parganas ...	Ditto ...	2	2	Panchanan Tarkaratna	Bhatpara ...	24-Parganas	...	Sankhya

CALCUTTA PANDIT SABHA—*concluded.*

Name of Stipend-winner.	Name of Teacher.	Residence or Institution.	District.	Name of Association.	Monthly amount of Stipend.	Period for which tenable.	Name and Residence of Teacher with whom the Stipend-winner purposes to continue study.			Kavya and Grammar.	Higher Subject.	Remarks.
							Name of Teacher.	Residence or Institution.	District.			
1	2	3	4	5	6	7	8	9	10	11	12	13
Raj Kumar Mukhopadhyaya	Prithwidhar Sarma ...	Sanskrit College ...	Calcutta ...	Pandit Sabha, Calcutta.	* 2	2	Government Sanskrit College.	Calcutta ...	Calcutta ...	...	Upanishad	* Received stipend of Rs. 2 last year, which should be cancelled from 1st September 1902.
Nibaran Chandra Chakravarti.	Prassanna Kumar Tarkanidhi.	Barahanagore ...	24-Parganas ...	Ditto ...	2	2	Prasanna Kumar Tarkanidhi.	Barahanagore .	24-Parganas	...	Do	Under the Deputy-Inspector of Schools, Calcutta.
Yatindra Narayan Das Gupta.	Ram Chandra Nyayaratna.	.. ...	Calcutta ...	Ditto ...	2	2	Ram Chandra Nyayaratna.	.....	Calcutta ...	...	Nyaya.	
Devendra Nath Ray	Tara Prasanna Sen Gupta.	167 Cornwallis Street	Ditto ...	Ditto ...	2	2	Tara Prasanna Sen Gupta.	167 Cornwallis Street.	Ditto ...	...	Upanishad	

BARISAL DHARMARAKSHINI SABHA.

					Rs.	Years.						
Satis Chandra Mukhopadhyaya.	Yadunath Nath Kavyaratna	Banaripara ...	Backergunge ...	Barisal Dharmarakshini Sabha.	2	2	Yadunath Kavyaratna	Banaripara ...	Backergunge	Kalap.		
Nibaran Chandra Mukhopadhyaya.	Prasanna Kumar Smritiratna.	Khalisakota ...	Ditto ...	Do. ...	2	2	Prasanna Kumar Smritiratna.	Khalisakota ...	Ditto ...	...	Smriti.	

CUTTACK SANSKRIT SAMITI.

					Rs.	Years						
Yadunath Kavyatirtha.	Sidheswar Tarkasidhanta	Yubraj	Orissa, Gurjats	Orissa Sanskrit Samiti.	2	2	Siddheswar Tarkasidhanta	Yubraj ...	Orissa, Gurjats.	...	Nyaya.	
Ram Chandra Mahapatra.	Mukunda Kavyatirtha ...	Padmanabha Ganja ...	Cuttack ...	Ditto ...	2	2	Mukunda Kavyatirtha.	Padmanabha Ganja.	Cuttack ...	...	Puran.	

BALASORE SANSKRIT SAMITI.

					Rs.	Years						
Radha Krishna Panda	Kali Charan Kavyatirtha	Basta	Balasore ...	Sanskrit Samiti, Balasore.	2	2	Kali Charan Kavyatirtha.	Basta ...	Balasore ...	Grammar.		

NARAIL VIDYOTSAHINI SABHA.

					Rs.	Years.						
Surendra Nath Bhattacharyya.	Sripatinath Smrititirtha	Bishnupur ...	Jessore ...	Vidyotsahini Sabha, Narail.	2	2	Sripatinath Smriti-tirtha.	Bishnupur ...	Jessore ...	Supadma.		
Kedareswar Chakravarti.	Ashutosh Smritiratna ...	Piljang	Khulna ...	Ditto ...	2	2	Ashutosh Smritira'na	Piljang ...	Khulna ...	...	Vedanta.	
Nakuleswar Chakravarti.	Umanath Smri i Siromani	Brahmanrangdia ...	Ditto ...	Ditto ...	2	2	Umanath Smriti Siromoni.	Brahmanrangdia	Ditto ...	...	Puran .	Received stipend of Rs. 2 last year, which should be cancelled from 1st September 1902.

KOTWALIPARA ARYYA SIKSHA SAMITI.

					Rs.	Years					
Jamakinath Bhattacharyya.	Prasanna Kumar Vedantatirtha.	Harinahati ...	Faridpur ...	Aryya Siksha Samiti, Kotwalipara.	2	2	Prasanna Kumar Vedantatirtha.	Harinahati ...	Faridpur ...	...	Upanishad.	
Yamini Kanta Bhattacharyya.	Umakanta Nyayaratna...	Dulardanga ...	Ditto ...	Ditto ...	2	2	Umakanta Nayaratna	Dulardanga ...	Ditto ...	...	Puran.	

CHITTAGONG VIDYAVINODINI SABHA.

					Rs.	Years.					
Iswar Chandra Chakravarti.	Kalikanta Smritibhushan	Bhatikhain ..	Chittagong ...	Vidyavinodini Sabha, Chittagong	2	2	Kalikanta Smritibhushan.	Bhatikhain ...	Chittagong ...	Kalap.		

BERHAMPORE PANDIT SABHA.

					Rs.	Years.					
Haridas Thakur ...	Rasvehari Sankhya-tirtha.	Dangapara ...	Murshidabad ...	Murshidabad	2	2	Rasvehari Sankhya-tirtha.	Dangapara ...	Murshidabad	Grammar		
Nitya Gopal Kavya-tirtha.	Ram Saran Vidyavagisa	Jubilee Tol, Berhampur	Ditto ...	Ditto ...	2	2	Ram Saran Vidyava-gisa.	Jubilee Tol, Berhampur	Ditto ...	...	Smriti.	

RESERVED FOR—ORISSA.

					Rs.	Years.					
Sukadeva Satpati ...	Yameswar Kavyatirtha	Baldeoji	Cuttack ...	Sanskrit Samiti Cuttack	2	2	Yameswar Kavyatir-tha.	Baldeoji ...	Cuttack ...	Kavya.	
Sristhidhar Acharyya	Kirtivas Nyayaratna ...	Amarda Tol ...	Balasore ...	Sanskrit Samiti, Balasore.	2	2	Kirtivas Nyayaratna...	Amarda Tol,	Balasore ...	...	Puran.
Bhagwan Mahapatra	Gadadhar Tripathi ...	Raghunandan tol ...	Puri.	Jagannath Samiti, Puri.	2	2	Gadadhur Tripathi ...	Raghunandan tol, Puri.	Puri ...	Grammar.	

CALCUTTA,
The 16th September 1902.

A. PEDLER,
Director of Public Instruction, Bengal.

D.

Stipends awarded to Pupils on the results of the Sanskrit Second Examinations, 1902, held by different Associations under the rules prescribed in Government Resolution No. 857, dated the 21st March 1892; Notification No. 4236, dated the 29th December 1896; Notification No. 1409, dated the 31st March 1896; and Director of Public Instruction's Rules for the distribution of Stipends to Pupils and Teachers, dated the 18th January 1901.

FOR MERIT.

Name of Stipend-winner.	Name of Teacher.	Residence or Institution, name of Association and District.			Monthly amount of Stipend.	Period for which tenable.	Name and Residence of Teacher with whom the Stipend-winner purposes to continue Study.			Kavya and Grammar.	Higher Subject.	Remarks.
		Residence or Institution.	District.	Name of Association.			Name of Teacher.	Residence or Institution.	District.			
1	2	3	4	5	6	7	8	9	10	11	12	13
Kusum Behari Das Gupta	Chandra Mohan Kavyavinode.	Comilla ...	Tippera ...	Idilpur Hitaishini Sabha.	Rs. 4	Years. 2	Chandra Mohan Kavya vinode.	Comilla ...	Tippera ...	Kavya.		
Kedar Nath Bhattacharyya.	Baidya Nath Vidyabhushan.	Pratapkati ...	Jessore ...	Calcutta Pandit Sabha,	4	2	Baidyanath Vidyabhushan.	Pratapkati ..	Jessore ...	...	Puran.	
Sasibhushan Bhattacharyya.	Guru Charan Vidyabhushan.	Bally ...	Hooghly ...	Ditto ...	4	2	Guru Charan Vidyabhushan.	Bally ...	Hooghly ..	...	Smriti.	
FOR BACKWARD LOCALITIES.												
Nanda Kumar Bhattacharyya.	Kali Kanta Smritibhushan.	Bhatikhain ...	Chittagong ...	Chittagong Vidyavinodini Sabha.	Rs. 3	Years 2	Kali Kanta Siromani	Bhatikhain ...	Chittagong ...	Grammar.		
Rasik Chandra Bhattacharyya.	Yadaveswar Tarkaratna.	Rangpur ..	Rangpur ...	Rangpur Dharma Sabha.	3	2	Yadaveswar Tarkaratna.	Rangpur ...	Rangpur ..	...	Puran.	
Atul Chandra Chakravarti.	Ramnath Smritikantha	Muktagacha ...	Mymensingh	Mymensingh Dharma Sabha.	3	2	Ramnath Smritikantha	Mymensin h ...	Mymensingh	...	Smriti	
STIPEND IN PROPORTION TO PASSES. DACCA.												
Tripura Charan Chakravarti.	Bama Charan Vyakarantirtha.	Jantrail ..	Dacca ..	Dacca ...	Rs. 3	Years. 2	Pama Charan Vyakarantirtha.	Jantrail ...	Dacca ...	Grammar.		
BIHAR SANSKRIT SANJIVAN.												
Nandan Jha ...	Tejnath Sarma ...	Bargoria ...	Darbhanga ...	Bihar Sanskrit Sanjivan.	Rs 4	Years. 2	Tejnath Sarma ...	Bargoria ...	Darbhanga ...	Grammar.		
Girijaprasad Misra ...	Sobhanath Pathak ...	Katahigali ...	Gaya ...	Ditto ...	4	2	Sobhanath Pathak ...	Katahigali ...	Gaya ...	Ditto.		
Govindaprasad Sarma ...	Umadatta Sarma ...	Sajivan Vidyalaya, Tikari.	Do. ...	Ditto ...	3	2	Umadatta Sarma ...	Sajivan Vidyalaya, Tikari.	Do. ...	Ditto.		
Narayan Bhatta ...	Sobhanath Pathak ...	Katahigali ...	Do. ...	Ditto ...	3	2	Sobhanath Pathak ...	Katahigali ...	Do. ...	Ditto.		

					Rs.	Years.					
Dharmaraj Ojha ...	Raghunandan Tripathi	Pramode Vidyalaya, Chapra.	Sarah ...	Ditto ...	4	2	Raghunandan Tripathi	Pramode Vidyalaya, Chapra.	Saran ...	.....	Puran.
Avadhanath Thakur ...	Gangadhar Jha ...	Janki ...	Darbhanga ...	Ditto ...	4	2	Gangadhar Jha ...	Janki ...	Darbhanga ...	.....	Jyotish.
Chattilal Jha ...	Bathan Jha ...	Karnagar ...	Bhagalpur ...	Ditto ...	3	2	Bathan Jha ...	Karnagar ...	Bhagalpur ...	.....	Do.
Chumbit Thakur ...	Kausikidatta Sarma ...	Mahesi ...	Ditto ...	Ditto ...	3	2	Kausikidatta Sarma ...	Mahesi ...	Ditto ...	.....	Do.

GHATAL SANSKRIT SAMITI.

					Rs.	Years.					
Murarimohan Panda ...	Dwarkanath Nyayabhushan.	Mugberia ...	Midnapore ...	Ghatal Sanskrit Samiti.	4	2	Dwarkanath Nyayabhushan	Mugberia ...	Midnapore ...	Grammar.	
Kalinath Tripathi ...	Ditto ...	Ditto ...	Ditto ...	Ditto ...	3	2	Ditto ...	Ditto ...	Ditto ...	Kavya.	

NAVADWIP BIBUDHA JANANI SABHA.

					Rs.	Years						
Yamininath Bhattacharyya.	Jaynarayan Tarkaratna	Navadwipa ...	Nadia ...	Navadwipa Bibudha Janani Sabha.	4	2	Jaynarayan Tarkaratna	Navadw ..	Nadia ...	...	Sankhya.	
Baikunthanath Bhattacharyya.	Taraprasanna Chudamani.	Chaitanya Chatuspathe, Navadwipa.	Do ...	Ditto ...	4	2	Taraprasanna Chudamani.	Chaitanya Chatuspathi, Navadwipa.	Do. ...	...	Smriti	Received stipend of Rs. 4 last year, which should be cancelled from 1st September 1902.
Ramlal Bhattacharyya .	Private	.....	.....	Ditto ...	3	2	Yadunath Sarbabhauma.	Navadwipa ...	Do. ...	...	Do.	

BHATPARA PARIKSHA SABHA.

					Rs.	Years.					
Rajani Kanta Bhattacharyya.	Yadab Chandra Smritiratna.	Bally ...	Hooghly ...	Bhatpara Pariksha Sabha.	4	2	Yadab Chandra Smritiratna.	Bally ...	Hooghly ...	...	Puran.
Asutosh Bhattacharyya ..	Harinath Vedantavagisa.	Bijaya Chatuspathi.	Burdwan ...	Ditto ...	3	2	Harinath Vedantavagisa.	Bijaya Chatuspathi.	Burdwan ...	...	Smriti.

CALCUTTA PANDIT SABHA.

					Rs.	Years.					
Sitanath Bhattacharyya	Haranath Sastri ...	Sampukur Street	Calcutta ...	Calcutta Pandit Sabha.	4	2	Haranath Sastri... ...	Sampukur Street	Calcutta ...	Kavya.	
Harigopal Bandyopadhyaya.	Asutosh Vidyabhushan.	Bharati Chatuspathi, Taltala.	Ditto ...	Ditto ..	3	2	Asutosh Vidyabhushan.	Bharati Chatuspathi, Taltala.	Ditto ...	Grammar.	
Pratap Chandra Kavyatirtha.	Sitanath Vedantasastri	Chinsura ...	Hooghly ...	Ditto ...	4	2	Sitanath Vedantasastri	Chinsura ...	Hooghly ...	...	Sankhya
Mahendranath Bhattacharyya.	Yajneswar Vedantabhusan.	Konnagar ...	Ditto ...	Ditto ...	4	2	Yajeswar Vedantabhusan.	Konnagar ..	Ditto ...	...	Puran.
Ramratna Bhattacharjee	Sitanath Vedantasastri	Chinsura ...	Ditto ...	Ditto ...	3	2	Sitanath Vedantasastri	Chinsura ...	Ditto ...	...	Vedanta.

NARAIL VIDYOTSAHINI SABHA.

Name of Stipend-winner.	Name of Teacher.	Residence or Institution, name of Association and District.			Monthly amount of Stipend.	Period for which tenable.	Name and Residence of Teacher with whom the Stipend-winner purposes to continue Study.			Kavya and Grammar	Higher Subject.	Remarks.
		Residence or Institution.	District.	Name of Association.			Name of Teacher.	Residence or Institution	District.			
1	2	3	4	5	6	7	8	9	10	11	12	13
Rakhal Chandra Bandyopadhyaya.	Sasibhushan Smritiratna.	Narail ...	Jessore ...	Narail Vidyotsahini Sabha.	Rs. 4	Years 2	Sasibhushan Smritiratna.	Narail ..	Jessore ...	..	Smriti.	
Purna Chandra Bhattacharyya.	Syamacharan Vidyaratna.	Duair ...	Faridpur ...	Ditto ...	3	2	Syamacharan Vidyaratna.	Duair ...	Faridpur ...	...	Puran	

BINNAFAIR SANSKRIT ASSOCIATION.

Banamali Kavyatirtha ...	Janardan Smritiratna	Kawakhola ...	Pabna ...	Sanskrit Association, Binnafair.	Rs. 3	Years. 2	Janardan Smritiratna	Kawakhola ...	Pabna ...	...	Sankhya.	Received Stipend of Rs. 2 last year, which should be cancelled from 1st September 1902.

IDILPUR HITAISHINI SABHA.

Syamacharan Bhattacharyya.	Taraprasanna Tarkavachaspati.	Singardaha ...	Faridpur ...	Hitaishini Sabha, Idilpur.	Rs. 3	Years. 2	Taraprasanna Tarkavachaspati.	Singardaha ...	Faridpur ...	...	Sankhya	Received Stipend of Rs. 2 last year, which should be cancelled from 1st September 1902.

BERHAMPORE PANDIT SABHA.

Hanseswar Chattapadhyaya.	Sasibhusan Vidantatirtha.	Abhaya Chatuspathi, Gangatikuri.	Burdwan ..	Berhampore Pandit Sabha.	Rs. 3	Years. 2	Sasibhusan Vedantatirtha.	Abhaya Chatuspathi.	Burdwan ...	...	Smriti.	

RESERVED FOR NYAYA.

					Rs.	Years.						
Phanibhushan Kavyatirtha.	Janakinath Tarkaratna	Korakdi ..	Faridpur ...	Vidyotsahini Sabha, Narail.	3	3	Janakinath Tarkaratna	Korakdi ...	Faridpur ...	...	Nyaya.	
Kali Krishna Bagchi ...	Jaynarayan Tarkaratna	Navadwipa ...	Nadia ...	Bibudha Janani Sabha, Navadwipa.	3	3	Jaynarayan Tarkaratna	Navadwipa ...	Nadia ...	...	Do.	
Rakhal Chandra Bhattacharyya.	Raj Krishna Tarkapanchanan.	Ditto ...	Do. ...	Ditto ...	3	3	Raj Krishna Tarkapanchanan.	Ditto ...	Do.	...	Do.	
Atmaram Pandit ...	Yadunath Sarvabhauma.	Ditto ...	Do. ...	Ditto ...	3	3	Yadunath Sarvabhauma.	Ditto ...	Do.	...	Do.	

RESERVED FOR ORISSA.

Jagannath Misra ...	Guru Charan Tarkadarsantirtha.	Ramkrishna tol, Puri.	Puri ...	Sanskrit Samiti, Balasore.	Rs. 3	Years. 2	Guru Charan Tarkadarsantirtha.	Ramkrishna tol	Puri ...	...	Vidanta.
Damodar Kavyatirtha ...	Mukunda Kavyatirtha	Padmanabha Ganja.	Cuttack ...	Orissa Sanskrit Samiti, Cuttack.	3	2	Mukunda Kavyatirtha	Padmanabha Ganja.	Cuttack ...	...	Puran.
Ram Chandra Misra ...	Gurucharan Tarkadarsantirtha.	Sanskrit School, Puri.	Puri ...	Jagannath Samiti, Puri.	3	2	Guru Charan Tarkadarsantirtha.	Sanskrit School, Puri.	Puri ...	...	Nyaya.

CALCUTTA,
The August 1902.

A. PEDLER,
Director of Public Instruction, Bengal.

E.

Stipends awarded to Teachers on the results of the Sanskrit First Examination, 1902, held by the different Associations under the Rules prescribed in Government Resolution No. 857, dated the 21st March 1892; Notification No. 4236, dated the 29th December 1896; Notification No. 1409, dated the 31st March 1896; and the Director of Public Instruction, Bengal's Rules for the distribution of Stipends to Pupils and Teachers, dated the 18th January 1901.

TENABLE FOR ONE YEAR.

Name of Teacher.	Residence or Institution.	District.	Name of Association.	Stipend per month.	Kavya and Grammar.	Higher Subjects.	Remarks.
1	2	3	4	5	6	7	8
FOR MERIT.							
				Rs.			
Umesa Chandra Vidyabhushan	Sunyakone	Midnapore ...	Ghatal Sanskrit Samiti ...	8	Grammar.		
Kula Chandra Siddhanta Panchanan	Machuakhal	Tippera ...	Dacca	8	Kavya.		
Yajneswar Tarkaratna ..	Teberia	Nadia ...	Bibhudha Janani Sabha, Navadwipa.	8	Grammar.		
Rajani Kanta Smritibhushan ...	Adwita Chatuspati, Tiluri ...	Bankura ...	Bhatpara Pariksha Sabha	8	Do.		
Haran Chandra Tarkavagisa .	Khunberia	Midnapore ...	Sanskrit Samiti, Ghatal ...	8	...	Puran.	
Prasanna Kumar Tarkanidhi ...	Barahanagore	24-Parganas ...	Calcutta Pandit Sabha	8	...	Sankhya.	
Harinath Vedantavagisa ...	Bijaya Chatuspati ...	Burdwan ...	Bhatpara Pariksha Sabha	8	...	Upanishad.	
Rasmohan Vidyaratna ...	Rajdia	Dacca ...	Dacca	8	...	Smriti.	
Chandi Charan Smritibhushan	11 Garanhata Street, Calcutta	Calcutta ...	Calcutta Pandit Sabha ...	8	...	Do.	
Panchanan Tarkaratna ...	Bhatpara	24-Parganas ...	Ditto ...	8	..	Sankhya.	
FOR BACKWARD LOCALITIES.							
				Rs.			
Bathan Jha	Karnagar	Bhagalpur ...	Bihar Sanskrit Sanjivan ...	6			
Raghunandan Misra ...	Madhuvani	Darbhanga ...	Ditto ...	6			
Kushadhwaj Smrituratna ...	Tilda	Midnapore ...	Ghatal Sanskrit Samiti ..	6			
Raghuram Siromani ...	Bishnupur	Bankura ..	Ditto ...	6			

Hari Chandra Tarkavagisa ...	[illegible]pur ...	...	Dinajpur ...	Rangpur Dharma Sabha	6
Yadunath Kavyaratna ...	Banaripara ...	...	Backergunge ...	Barisal Dharmaraksnini Sabha.	6
Prasanna Kumar Vedantatirtha	Harinahati ...	...	Faridpur ...	Kotwalipara Aryya Siksha Samiti.	6
Gopal Chandra Smritititha ...	Kumira ...	...	Jessore ...	Narail Vidyotsahini Sabha	6
Ramnath Smritikantha ...	Muktagacha ...		Mymensingh ...	Mymensingh Dharma Sabha.	6
Kali Kanta Tarkasiddhanta ...	Chauripali ...	...	Noakhali ...	Noakhali Suhrid Sammilini Sabha.	6

BY ADDING UP MARKS.

					Rs.
Durga Prasanna Tarkabhushan	Purushottampur ...	...	Midnapore ...	Ghatal Sanskrit Samiti ...	8
Sarada Charan Vidyaratna ...	Sonachaka ...	...	Noakhali ...	Noakhali Suhrid Sammilani Sabha.	8
Rajani Kanta Vidyaratna ...	Baruikhali ...	...	Jessore ...	Narail Vidyotsahini Sabha	8
Devendranath Smritiratna ...	Samudragar ...	...	Burdwan ...	Navadwipa Bibudha Janani Sabha.	8
Sital Chandra Smritititha ...	Magura ...	...	Jessore ...	Narail Vidyotsahini Sabha	8
Kailas Chandra Vidyabhushan	Amtali ...	...	Faridpur ...	Idilpur Hitaishini Sabha	8
Umanath Misra	Tikari ...	...	Gaya ...	Bihar Sanskrit Sanjivan ...	8
Ram Saran Vidyavagisa ...	Jubilee tol, Berhampur ..		Murshidabad ...	Berhampore Pandit Sabha	8
Kali Krishna Siromani ...	Kavindra College, Goila ...		Backergunge ...	Bakla Aryya Sammilani Sabha.	8
Kalidas Tarkaratna ...	Aryya Vidyalaya, Unasia ...		Faridpur ...	Kotwalipara Aryya Siksha Samiti.	8
Jaynarayan Vidyanidhi ...	Balsi ...	...	Bankura ...	Ghatal Sanskrit Samiti ...	8
Guru Charan Vidyaratna ...	Harihar Vidyalaya, *Paschimpar*, Kotwalipara.		Faridpur ...	Barisal Dharmarakshini Sabha.	8
Syama Charan Vidyaratna ..	Dauir ...	...	Ditto ...	Bakla Aryya Sammilani Sabha.	8
Narayan Chandra Vidyaratna	Itina ...	...	Jessore ...	Narail Vidyotsahini Sabha	8
Rajaninath Palaratna ...	Kirtipasa ...	...	Backergunge ...	Barisal Dharmarakshini Sabha.	6
Krishnapada Sankhyatirtha ...	Bhupatinagar ...	...	Midnapore ...	Ghatal Sanskrit Samiti ...	6
Kamal Krishna Smritibhushan	Bhatpara ...	...	24-Parganas ...	Bhatpara Pariksha Sabha	6
Chandidas Nyayatarkatirtha ...	Binnafair ...	...	Mymensingh ...	Sanskrit Association, Binnafair.	6
Priyanath Kavyatirtha ..	Baruikhali ...	.	Jessore ...	Vidyotsahini Sabha, Narail	6
Umacharan Tarkaratna ...	Kelisahar ...	...	Chittagong ...	Chittagong Vidyavinodini Sabha.	6
Bhutnath Bhattacharyya ...	Bhagwanpur ...	...	Midnapore ..	Ghatal Sanskrit Samiti ...	6
Guru Charan Smritiratna ...	Katihali ...	...	Mymensingh ...	Mymensingh Dharma Sabha.	6
Bholanath Smritititha ...	Paratal ...	...	Burdwan ...	Ghatal Sanskrit Samiti ...	6
Kali Charan Kavyatirtha .	Basta ...	...	Balasore . .	Balasore Sanskrit Samiti	6
Bamapada Siromani ...	Kelomal ...	...	24-Parganas ...	Ghatal Sanskrit Samiti ...	6

RESERVED FOR ORISSA.

NAME OF TEACHER.	Residence or Institution.	District.	Name of Association.	Stipend per month.	Kavya and Grammar.	Higher Subjects.	REMARKS.
1	2	3	4	5	6	7	8
				Rs.			
Artatran Kaviratna ...	Samchandra Tol ...	... Balasore ...	Sanskrit Samiti, Balasore	6			
Haribar Vidyabhushan ...	Talchar ...	.. Cuttack .	Orissa Sanskrit Samiti, Cuttack.	6			
Gangadhar Saranghee ...	Kumrung, Puri .	... Puri ...	Puri Jagannath Samiti ...	6			

HARAKUMAR TAGORE TOI STIPEND.

				Rs.			
Ramchandra Nyayaratna ...	17 Ramkanta Mistry's Lane ...	Calcutta ...	Pandit Sabha, Calcutta ...	4			
Gurudas Nyayaratna ...	Chatra	Hooghly ...	Ditto ...	4			
Harisankar Smritiratna ...	Searsole	Burdwan ...	Ditto ...	4			
Haridas Vidyaratna ...	Utterpara	Hooghly ...	Ditto ...	4			

CALCUTTA,
The 16th September 1902.

A. PEDLER,
Director of Public Instruction, Bengal.

F.

Stipends awarded to Teachers on the result of the Sanskrit Second Examination in 1902, held by different Associations under the Rules prescribed in Government Resolution No. 857, dated the 21st March 1892; Notification No. 4236, dated the 29th December 1896; Notification No. 1409, dated the 31st March 1896; and the Director of Public Instruction of Bengal's Rules for the distribution of Stipends to Pupils and Teachers, dated the 18th January 1901.

TENABLE FOR ONE YEAR.

Name of Teacher.	Residence or Institution.	District.	Name of Association.	Stipend per month.	Kavya and Grammar.	Higher Subjects.	Remarks
1	2	3	4	5	6	7	8
FOR MERIT.							
				Rs.			
Chandramohan Kavyavinode ...	Comilla	Tippera ...	Idilpur Hitaishini Sabha	12	Kavya.		
Siti Kantha Vachaspati ...	Navadwipa	Nadia ..	Navadwipa Bibudha Janani Sabha.	12	Mugdha-bodha		
Baidyanath Vidyabhushan ..	Pratapkati	Jessore ...	Calcutta Pandit Sabha ...	12	...	Puran	
Gurucharan Vidyabhushan ...	Bally	Hooghly ...	Ditto ...	12	...	Smriti.	
Sasibhushan Vedantatirtha ...	Gangatikuri	Burdwan	Berhampore Pandit Sabha	12	...	Vedanta.	
Yadab Chandra Smritiratna ...	Bally	Hooghly ...	Bhatpara Pariksha Sabha	12	...	Puran.	
BACKWARD LOCALITIES							
				Rs.			
Sobhanath Pathak ...	Katahigali, old town Gaya ...	Gaya ...	Bihar Sanskrit Sanjivan	10			
Raj Chandra Nyayapanchanan	Malatinagar, Bogra ...	Bogra ...	Rangpur Dharma Sabha	10			
Sasikumar Kavyatirtha ...	Harihar Vidyalaya, Kotwali-para.	Faridpur .	Barisal Dharmarakshini Sabha.	10			
Kali Kanta Smritibhushan ...	Bhatikhain, Chittagong .	Chittagong ...	Chittagong Vidyavinodini Sabha	10			
Ram Nath Smritikantha ...	Muktagacha	Mymensingh ...	Mymensingh Dharma Sabha	10			
Annada Charan Tarkachudamani	Noakhali	Noakhali ...	Noakhali Suhrid Sammilani Sabha.	10			
BY ADDING UP MARKS							
				Rs.			
Harihar Sarma	Mansuk Ray's Patsala ..	Patna ...	Bihar Sanskrit Sanjivan	12			
Dwarkanath Nyayabhushan ...	Mugberia	Midnapore ...	Ghatal Sanskrit Samiti ...	12			

Name of Teacher.	Residence of Institution.	District.	Name of Association.	Stipend per month.	Kavya and Grammar.	Higher Subjects.	Remarks.
1	2	3	4	5	6	7	8
				Rs.			
Brajaraj Goswami ...	Chaitanya Chatuspathi, Navadwipa.	Nadia ...	Navadwip Bibudha Janani Sabha	12			
Digambar Tarksiddhanta ...	Bhatpara	24-Parganas ...	Bhatpara Pariksha Sabha	12			
Purushottam Vidyanidhi ...	Bani Tol, Bellyabera ...	Midnapore ...	Balasore Sanskrit Samiti	12			
Asutosh Smritiratna ...	Piljang	Khulna ...	Narail Vidyotsahini Sabha	12			
Brajamohan Vidyaratna ...	Dadpur	Midnapore ..	Ghatal Sanskrit Samiti ...	12			
Mukunda Kavyatirtha ...	Padmanabha Ganja ..	Cuttack	Cuttack Orissa Sanskrit Samiti.	12			
Sarada Charan Smritibhushan..	Mulajore Sanskrit tol ...	24-Parganas ...	Calcutta Pandit Sabha ...	10			
Panchanan Kaviratna ...	Binnafair .	Mymensingh ...	Binnafair Sanskrit Association.	10			
Lalit Mohan Das Gupta ...	Kavindra College, Goila	Backergunge ..	Bakla Aryya Sammilani Sabha.	10			
Dwarkesa Tarkabhushan ...	Kechka ...	Burdwan ...	Bhatpara Pariksha Sabha	10			
Baidyanath Misra .	Sanskrit School, Puri .	Puri ...	Puri Jagannath Samiti ...	10			
Kali Kanta Siromani	Kotwalipara	Faridpur ..	Kotwalipara Aryyasiksha Samiti.	10			
Haranath Sastri	Sampukur Street, Calcutta ...	Calcutta ..	Calcutta Panlit Sabha ...	10			
RESERVED FOR NYAYA							
				Rs.			
Janakinath Tarkaratna ...	Korakdi	Faridpur ...	Narail Vidyotsahini Sabha	12			
Mahamahopadhyaya Rajkrishna Tarkapanchanan.	Navadwipa	Nadia ...	Navadwipa Bibudha Janani Sabha.	10			
RESERVED FOR ORISSA							
				Rs.			
Ram Chandra Sastri ...	Mayurbhanja	Mayurbhanja, Balasore.	Balasore Sanskrit Samiti	10			
Gadadhar Tripathi ...	Raghunandan Tol ...	Puri ...	Puri Jagannath Samiti ...	10			
Yameswar Kavyatirtha ...	Baldeoji	Cuttack ...	Cuttack Orissa Sanskrit Samiti.	10			

HARA KUMAR TAGORE TOL STIPEND.

				Rs.			
Haripada Kavyatirtha ...	Mulajore	24-Parganas ...	Calcutta Pandit Sabha ...	6			
Hari Chandra Tarkaratna ...	Searsole	Burdwan ...	Ditto ...	6			
Durga Charan Smrititirtha ...	Nebu Bagan	Calcutta ...	Ditto ...	5			
Asutosh Vidyabhusan ...	Bharati Chatuspathi, Taltala ...	Ditto ...	Ditto ...	5			
Brajendranath Smrititirtha ...	Mahespur	Jessore ...	Ditto ...	5			

CALCUTTA,
The 16th September 1902.

A. PEDLER,
Director of Public Instruction, Bengal.

G.

Special stipends to teachers under revised Rule No. 23, paragraph 2, of the Government Resolution No. 857, dated the 21st March 1892, and rules for the distribution of stipends to teachers [section (e), dated the 18th January 1901].

[On the results of the Sanskrit First and Second examinations, 1902.]

TENABLE FOR ONE YEAR.

Name of Association.	Name of Teacher.	Residence or Institution.	District.	Value of stipends.	Examination.	Remarks.
1	2	3	4	5	6	7
P[illegible] Sanskrit Sanjivan ...	Yogadhar Misra	Dumka	Santhal Parganas	Rs. 8	First examination.	
	Baldeva Sarma	Varnadharmopayogini Pathsala, Arrah.	Arrah ...	6	Ditto.	
	Nirasan Misra	Rajnagar	Darbhanga ...	12	Second examination.	
	Lalji Pandeya	Hatua	Saran. ...	10	Ditto.	

CALCUTTA,
The 16th September 1902.

A. PEDLER,
Director of Public Instruction, Bengal.

NOTIFICATIONS OF THE BOARD OF REVENUE.

No. 2229B.

NOTICE is hereby given that the Tenth Sale of Opium, the Provision of 1900-1901, will be held at the Government Opium Sale-room, No. 2 Bankshall Street, on Monday, the 29th September 1902, at 11 A.M., and will comprise 4,000 chests, viz:—

	Chests.
Opium manufactured at the Patna Factory, consisting of	2,000
Ditto ditto at the Ghazipur Factory, consisting of ...	2,000
Total ...	4,000

2nd.—The general conditions of the sale now advertised will be the same as usual. They may be ascertained by reference to the Notification issued on the 19th November 1901, and published in the *Government* and *Exchange Gazettes*, or on personal application at the Office of the Board of Revenue.

3rd.—The latest dates for deposit and clearance will be the 4th and 14th October 1902, respectively, that is to say, no Bank of Bengal Receipts, Government Promissory Notes, or other public securities that may be tendered for deposit in redemption of Promissory Notes given by purchasers in the sale-room will be received after 1-30 P.M. of Saturday, the 4th October 1902, and no Bank of Bengal Receipts in full payment of lots will be accepted after 3-30 P.M. of Tuesday, the 14th October 1902.

4th.—In addition to the quantity above advertised for sale, the following quantities, more or less, of the opium manufactured at the Patna and Ghazipur Factories will be brought to sale down to December next, on or about the dates specified below. The Board of Revenue, however, reserve to themselves the right of altering these dates, should circumstances render it expedient to do so:—

DATES.	Manufactured at the Patna Factory; about chests.	Manufactured at the Ghazipur Factory; about chests.	Total; about chests.
On or about Monday, 3rd November 1902 ...	2,000	2,000	4,000
On or about Monday, 1st December ,, ...	2,000	2,000	4,000
Total ...	4,000	4,000	8,000

By order of the Board of Revenue, L. P.,

H. WHEELER, *Secretary*.

BOARD OF REVENUE, L. P., CALCUTTA, *the 25th August 1902*.

CUSTOM HOUSE NOTICES.

DURGA AND LAKSHMI PUJAS.

THE holidays to be observed in offices under the Government of Bengal are from Monday, the 6th, to Friday, the 17th, October, inclusive.

The Custom House and its Treasury will, however, be open during that period for the usual hours, except from Wednesday, the 8th, to Saturday, the 11th, and on Thursday, the 16th, and Friday, the 17th, October. On these dates it will be open free of charge from 11 A.M. to 12 noon for entering and clearing vessels and for the issue of bills of entry and shipping bills for free goods from or to such vessels, provided notice has been given by the agents concerned on the last preceding open day. The Treasury will, however, remain closed on these days.

L. F. MORSHEAD, *Offg. Collector of Customs*.

CALCUTTA CUSTOM HOUSE, *the 2nd September 1902*.

To prevent the repetition of certain frauds which have been committed upon the Custom House, it is notified that in future—

1. Bills of entry or shipping bills should invariably be presented by the Sircars who have signed them, and their signatures should have been countersigned, as they already are in many instances, by a representative of the firm or party for whom they are authorised to appear.

2. All entries relating to—

(*a*) the number of packages or the like in which the goods are contained,
(*b*) their *total* value in the column applicable,

should be entered in both words and figures; and the entry in words should have "only" written at the end of it, whilst both words and figures should be written sufficiently clearly and closely together to make any subsequent alteration easily discernible. The name of the firm or party for whom the goods are being cleared should also be entered in the last column of the forms unless shown already elsewhere on them.

L. F. MORSHEAD, *Offg. Collector of Customs.*

CALCUTTA CUSTOM HOUSE, *the 5th September 1902.*

ELECTION OF MUNICIPAL COMMISSIONERS.

NOTIFICATION.

IT is hereby notified for general information that a bye-election will be held on Tuesday, the 28th October, under section 27 of the Bengal Municipal Act, III (B.C.) of 1884, as amended by Act IV (B.C.) of 1894, in the Dinapore Nizamat Municipality, in the district of Patna, for the election of a Commissioner for that Municipality in the place of Babu Nand Kumar Singh removed under section (20) (1) (*c*) of the Act.

E. F. GROWSE, *Offg. Commissioner.*

PATNA COMMR.'S OFFICE, BANKIPORE, *the 10th September 1902.*

NOTIFICATION.

IN supersession of this office notification published at page 1361, Part I of the *Calcutta Gazette*, dated the 5th December 1900, it is hereby notified for general information that, under Rule 21 (*b*) of the Dispensary Manual, the following gentlemen have been appointed members of the Committee formed for the management of the Chandbali Dispensary, in the district of Balasore:—

1. The Subdivisional Officer, Bhadrak ... } *Ex-officio.*
2. The Civil Medical Officer, Balasore ... }
3. W. G. Mayston, Esq., President of the Committee.
4. H. G. Strong, Esq.
5. Revd. G. Ager.
6. Babu Haribundhu Chowdhury.
7. „ Jagannath Mal.
8. Abu Baker Haji Ismile.
9. Syed Golam Mohammed.

K. G. GUPTA, *Commissioner.*

ORISSA COMMR.'S OFFICE, CAMP BALASORE, *the 5th September 1902.*

NOTIFICATION.

IN supersession of this office notification published at page 1174, Part I of the *Calcutta Gazette*, dated the 24th October 1900, it is hereby notified for general information that, under Rule 21 (*b*) of the Dispensary Manual, the following gentlemen have been appointed members of the Committee formed for the management of the Bhadrak Dispensary, in the district of Balasore:—

1. The Subdivisional Officer, Bhadrak ... } *Exo-officio.*
2. The Sub-Deputy Collector ... }
3. The Munsif, Bhadrak ... }
4. The Civil Medical Officer, Balasore ... }
5. Babu Hemendra Nath Bose, Pleader, Bhadrak.
6. Mohasay Radhakanta Roy, Zamindar.
7. Babu Bhaghat Prosad Mohapatra, Zamindar.
8. „ Haribandhu Choudhury, Merchant.
9. „ Ganapati Das, Pleader.
10. „ Bhairab Nath Chand, Mukhtear.

K. G. GUPTA, *Commissioner.*

ORISSA COMMR.'S OFFICE, CAMP BALASORE, *the 5th September 1902.*

NOTIFICATION.

IN supersession of the notification published at page 1038, Part I of the *Calcutta Gazette*, dated the 14th August 1901, it is hereby notified for general information that, under Rule 21 (*b*) of the Dispensary Manual, the following gentlemen have been appointed members of the Committee formed for the management of the Balasore Pilgrim Hospital, in the district of Balasore :—

Members.

1. The District Magistrate, President ... } *Ex-officio.*
2. The Senior Deputy Magistrate ... } *Ex-officio.*
3. The Civil Surgeon or Civil Medical Officer, Secretary ... } *Ex-officio.*
4. Revd. H. Hamlen.
5. ,, E. H. Longher.
6. Captain H. J. Steans.
7. Miss Shirly H. Smith, M.D. (Lady Doctor).
8. Miss J. J. Scott.
9. Raja of Nilgiri.
10. Raja Baikuntha Nath De Bahadur.
11. Babu Radha Charan Das.
12. ,, Hemendra Kumar Mandel.
13. Maulvi Bhuyan Abdus Sobhan Khan.
14. Babu Udai Chand De.

K. G. GUPTA, *Commissioner.*

ORISSA COMMR.'S OFFICE, CAMP BALASORE, *the 5th September 1902.*

NOTIFICATION.

UNDER Rule 21 (*b*) of the Rules for the management of Charitable Hospitals and Dispensaries in Bengal, Maulvi Syed Sakhawat Hossein and Babu Pran Mohan Thakur are appointed additional members of the Committee for the management of the Charitable Dispensary at Bhagalpur.

H. C. WILLIAMS, *Commissioner.*

COMMR.'S OFFICE, BHAGALPUR, *the 8th September 1902.*

NOTIFICATION.

IT is hereby notified for general information, under Rule 21 of the Dispensary Manual that the undermentioned gentlemen have been appointed as additional members of the Managing Committee of the Mahesh-Rishra Dispensary, in the district of Hooghly :—

1. Babu Prasanna Kumar Das.
2. ,, Purna Chandra Chakraverty.
3. ,, Abinash Chandra Banerjee.
4. ,, Kishori Lal Banerjee.

RAJ MOHAN CHUCKERBUTTY, *Pers. Asst.*, for *Commr. on tour.*

COMMR.'S OFFICE, BURDWAN DIVN., CHINSURA, *the 10th September 1902.*

The Calcutta Gazette.

WEDNESDAY, SEPTEMBER 17, 1902.

PART IA.

Orders and Notifications by the Government of India, &c.

[*Reprinted from the "Gazette of India."*]

The following order, issued by the Government of India in the Home Department, is republished for general information.

C. E. BUCKLAND,
Chief Secy. to the Govt. of Bengal.

NOTIFICATIONS.

PUBLIC.

Simla, the 11th September 1902.

No. 2759.—In exercise of the power conferred by section 5, sub-section (2), clause (*f*) of the Indian Explosives Act, 1884 (IV of 1884), the Governor-General in Council is pleased to direct that, after the words "nothing in these rules shall apply" in the third paragraph of the notification of the Government of India in the Home Department, No. 5528 (Public), dated the 11th October 1901, the words "to the packing or transport of capped safety cartridge cases, if otherwise empty, or" shall be inserted.

MEDICAL.

The 10th September 1902.

No. 1137.—The services of Captain C. J. Robertson-Milne, M.B., I.M.S. (Bengal), are placed temporarily at the disposal of the Government of Bombay, with effect from the date on which he may assume charge of his duties.

No. 1140.—The services of Captain J. C. H. Leicester, M.D., F.R.C.S., I.M.S., are placed temporarily at the disposal of the Government of Bengal.

H. H. RISLEY,
Offg. Secy. to the Govt. of India.

The following order, issued by the Government of India in the Foreign Department, is republished for general information.

C. E. BUCKLAND,
Chief Secy. to the Govt. of Bengal.

NOTIFICATION.

Simla, the 10th September 1902.

No. 1473-G.—With the sanction of His Majesty's Government, the Governor-General in Council is pleased to recognise the appointment of Mr. Roostumjee Dhunjeebhoy Mehta, C.I.E., as Acting Consul-General for Persia at Calcutta.

* * * *

The 11th September 1902.

No. 1489-G.—Mr. C. L. S. Russell of the Indian Civil Service, a Political Assistant of the 1st (Officiating Political Agent of the 4th) class, is granted privilege leave for three months, with effect from the 13th September 1902, or the subsequent date on which he may avail himself of the leave.

H. S. BARNES,
Secy. to the Govt. of India.

The following order, issued by the Government of India in the Finance and Commerce Department, is republished for general information.

C. E. BUCKLAND,
Chief Secy. to the Govt. of Bengal.

NOTIFICATION.

LEAVE AND APPOINTMENTS.

Simla, the 8th September 1902.

No. 4808-P.—The services of Mr. C. Sandford, Chief Superintendent in the office of the Accountant-General, Bengal, are placed temporarily at the disposal of the Government of Bengal.

E. N. BAKER,
Offg. Secy. to the Govt. of India.

The following order, issued by the Government of India in the Military Department, is republished for general information.

C. E. BUCKLAND,
Chief Secy. to the Govt. of Bengal.

VOLUNTEER CORPS.

APPOINTMENTS AND RESIGNATIONS.

Simla, the 12th September 1902.

No. 843.—Assam-Bengal Railway Volunteer Rifles—

Lieutenant John George Berrie, supernumerary list, resigns his commission, with effect from the 15th August 1902.

SPECIAL.

No. 844.—In connection with the forthcoming Coronation Darbar to be held at Delhi in January 1903, the Government of India have under consideration the feasibility of inviting mutiny veterans, both British and Native, to the Darbar. Before arriving at any decision on this point, they desire to ascertain, if possible, the numbers of such veterans as are in possession of the Mutiny Medal. Veterans fulfilling the above condition who would like to attend the Darbar, if the opportunity were offered to them, are therefore requested to send in their names and addresses at once to the Local Government or Administration in whose jurisdiction they are residing.

E. G. BARROW, *Major-Genl.*,
Secretary to the Government of India.

The Calcutta Gazette.

WEDNESDAY, SEPTEMBER 17, 1902.

PART IB.

ORDERS BY THE LIEUT.-GOVERNOR OF BENGAL.

MUNICIPAL AND LOCAL.

NOTIFICATIONS.

Nadia.

No. 1646T.M.—The 8th September 1902.—It is hereby notified that, under section 59 of the Bengal Municipal Act, III of 1884, as modified up to 1st November 1896, the Lieutenant-Governor approves the election by the Commissioners of the Nadia Municipality, in the district of Nadia, of Babu Jugabandhu Banerjee to be their Chairman.

Champaran.

No. 1650T.M.—The 8th September 1902.—Whereas a Notification No. 840T.M, dated the 7th June 1902, declaring the Lieutenant-Governor's intention to revise the boundaries of the Bettiah Municipality, in the district of Champaran, so as to exclude from the limits of the said Municipality the village of Banuchapra, was published at page 123, Part IB of the *Calcutta Gazette* of the 11th June 1902, and whereas no objection was raised to the proposal, it is hereby notified for general information that, in exercise of the power vested in the Local Government by section 9A of the Bengal Municipal Act, III of 1884, as modified up to 1st November 1896, and in accordance with the recommendation of the Commissioners of the Bettiah Municipality, made at a meeting, the Lieutenant-Governor sanctions the above proposal. The revised boundaries of the Municipality, after the exclusion of the said village, will be as defined below :—

East.—Dukharan, Sunder Kuer, and Chatkai Ojha's mango garden, 145th mile of the Tirhut State Railway line, tola Harbatika, and mango tope east of Koeritola, and Manager's garden and Peunibagh.

West.—Western boundaries of the villages Kargahia, Jamadar tola, and Basarahtola.

North.—Bagaha Road, with the continuation of this road to the east up to the railway wire fencing, and from this point the railway wire fencing.

South.—Ranee Chandrawat Marwari's burning ghat, the junction of the Tengrahi ghat, and the Gobindganj Road, Jhengat Kurmi's garden, Bisseswar Hajam's garden, and Jawakir Burhi's garden.

Palamau

No. 1653T.M.—The 8th September 1902.—The following rules, framed by the Deputy Commissioner of Palamau, with the approval of the Commissioner of the Chota Nagpur Division, under section 15 of the Bengal Ferries Act, I of 1885, for the management of public ferries in the district of Palamau, have been accepted by the Lieutenant-Governor, and are published for general information.

Rule 1—In these rules the term "Magistrate" includes the Deputy Commissioner of Palamau and any Magistrate subordinate to him and appointed by him in that behalf.

Rule 2.—Every public ferry in the district of Palamau shall either be held khas by the Magistrate or be leased by public auction.

RULES FOR THE MANAGEMENT OF PUBLIC FERRIES HELD KHAS.

Rule 3.—For every public ferry which is held khas, the Magistrate shall from time to time—

(*a*) provide such boats, landing-stages, rest-houses and other appliances as he shall think proper;
(*b*) appoint a suitable person to superintend the plying of the ferry, provide and pay boatmen, receive the authorised tolls, and remit the same to the treasury;
(*c*) fix, with the approval of the Commissioner, the tolls to be levied from persons using the ferry;
(*d*) cause a schedule of such tolls, legibly written in the vernacular, to be fixed upons both landing-stages;
(*e*) determine the maximum number of passengers, animals, carts, vehicles and goods which each ferry boat shall carry, and cause a notice to this effect to be affixed to each boat;
(*f*) determine the hours within which the boats shall ply and the minimum number of journeys to be made every day;
(*g*) provide for the prompt conveyance of the mails at all times across the ferry.

Rule 4.—Any person may compound for tolls payable for the use of the ferry; and if the ferry should be closed before the expiry of the period for which such person has compounded for tolls payable for its use, he shall be entitled to a refund, the amount of which shall bear the same proportion to the whole sum paid by him as the period remaining bears to the whole period for which he compounded. Such refund shall be made under the orders of the Magistrate.

RULES FOR LEASING OUT FERRIES.

Rule 5.—When it has been determined to lease the tolls of any public ferry by auction under section 9 of Act I (B.C.) of 1885, the Magistrate shall, at least 15 days before the auction is held, cause an advertisement of such auction to be published, both in English and in the vernacular, in such place and in such manner as to him shall seem expedient.

Rule 6.—The advertisement shall specify—

(*a*) the time and place of the sale;
(*b*) the period for which the ferry is to be leased, and the dates between which the lessee shall be bound to ply the ferry every year;
(*c*) the number and description of the boats to be maintained, the strength of the crew to be employed on each, and the maximum number of passengers, animals, vehicles and the bulk or weight of goods each is authorised to carry;
(*d*) the liability or otherwise of the lessee to provide the boats and to keep them in repair;
(*e*) the liability or otherwise of the lessee to provide and keep in order the landing-stages and the rest-houses or travellers' sheds, if any, at either or both termini of the crossing;
(*f*) the minimum number of crossings to be made daily at any particular season of the year;
(*g*) the rate of tolls to be levied;
(*h*) the persons and things to be ferried over free of toll as provided in Rule 14;
(*i*) the instalments in which the rent for the ferry is to be paid; and
(*j*) such other particulars as the Magistrate shall consider necessary.

Rule 7.—A copy of the advertisement, and of the rules and the form of agreement required to be executed under section 9 of the Act, shall be posted up in a conspicuous place in the Magistrate's office, and shall be duly notified on the day of the auction.

Rule 8.—On the day of the auction the lessee, to whom the ferry has been knocked down, shall deposit 25 per cent. of the bid as security for the due fulfilment by him of the conditions of his lease. This deposit may, however, at the discretion of the Magistrate, be dispensed with in the case of small ferries in which boats or canoes are not provided by Government.

Rule 9.—In cases in which the ferry is leased for only a year or part of a year, the lessee shall be held liable for the rent for the entire period the moment the ferry has been knocked down to him. In cases in which the ferry is leased for a number of years the liability for each year's rent shall accrue from the first day of the year.

Rule 10.—The contract which the lessee will be required to execute under section 9 of the Act shall be in the form appended to these rules. The lessee shall be bound to execute this contract within 24 hours immediately after the ferry has been knocked down to him, unless the Magistrate grants him an extension of time for executing the same.

Rule 11.—As soon as possible after the contract has been executed by the lessee, the Magistrate shall furnish him, free of charge, with a copy of these rules, a list of the authorised tolls duly signed under section 19 of the Act, and two notice-boards having written on them legibly in the vernacular the schedule of tolls applicable to the ferry, the number of boats which the lessee is bound to keep plying, the number of men by whom each boat is to be manned, and the maximum number of passengers, &c., each boat is allowed to

carry. The notice-boards shall be fixed by the lessee in a conspicuous place at both ends of the ferry; and shall be kept by him in a proper condition On the expiry of his lease they shall be returned by him to the Magistrate.

RULES FOR THE MANAGEMENT OF FERRIES LEASED BY PUBLIC AUCTION AND FOR REGULATING THEIR TRAFFIC.

Rule 12.—The lessee shall be bound to ferry over diligently, carefully, and with the least possible delay all passengers, vehicles, animals and goods which may come to the ferry ghat to be ferried over.

Rule 13.—The rate of tolls to be levied shall be those fixed by the Magistrate, with the approval of the Commissioner, under section 18 of the Act. The lessee shall not charge or demand tolls at a higher rate, although for special reasons he is at liberty to ferry over free of charge or at a less rate of tolls any passengers, vehicles, animals and goods which may come to the ferry ghat to be ferried over without having any claim in consideration thereof to any deduction in the rent.

Rule 14.—The lessee shall not charge or demand tolls for ferrying over—

(*a*) Mails, mail-carts, dâk-runners and Government telegraph messengers on duty.
(*b*) Commissariat stores, animals and vehicles, when accompanied by a chalan from the Commissariat officer.
(*c*) Persons or property mentioned in section 3* of the Indian Tolls (Army) Act, 1901.
(*d*) Police and other public officers and process-serving peons when travelling on duty with their *bonâ fide* baggage, horses, palkies or other conveyances.
(*e*) Executive officers of the District Road Department when travelling on duty.
(*f*) Coolies engaged in repairing roads with their tools and instruments.
(*g*) Persons carrying dead bodies or property sent in by the police.

Rule 15.—The lessee shall not charge or demand tolls from persons who wade or swim across or take cattle or other animals or property across at their own cost and risk, or from persons who cross themselves, or take other persons across without charge in their own boats.

---

* Section 3 of the Indian Tolls (Army) Act—

"The following persons and property, namely—

(*a*) all officers and soldiers of—
(i) His Majesty's Regular Forces,
(ii) any local corps, or
(iii) Imperial Service Troops,
when on duty or on the march,

(*b*) all members of a corps of Volunteers when on duty or when proceeding to or returning from duty;
(*c*) all officers and soldiers of the Indian Reserve Forces when proceeding from their place of residence on being called out for training or service, or when proceeding back to their place of residence after such training or service;

(*d*) all grass-cutters when employed in the service of—
(i) His Majesty's Regular Forces,
(ii) any local corps,
(iii) Imperial Service Troops, or
(iv) any corps of Volunteers;

(*e*) all other authorised followers of—
(i) His Majesty's Regular Forces,
(ii) any local corps,
(iii) Imperial Service Troops, or
(iv) any corps of Volunteers,
when they accompany any body of such Forces, Troops or Volunteers or any members of such corps on the march, or when they are otherwise moving under the orders of military authority;

(*f*) all members of the families of officers, soldiers or authorised followers of—
(i) His Majesty's Regular Forces, or
(ii) any local corps,
when accompanying any body of troops, or any officer, soldier or authorised follower thereof on dut or on the march;

(*g*) all prisoners under military escort;
(*h*) the horses and baggage, and the persons (if any) employed in carrying the baggage of any persons exempted under any of the foregoing clauses, when such horses, baggage or persons accompany the persons so exempted under the circumstances mentioned in those clauses respectively;
(*i*) all carriages and horses belonging to His Majesty or employed in His Majesty's military service and all persons in charge of or accompanying the same, when conveying any such persons as hereinbefore in this section mentioned or when conveying baggage or stores, or when returning unladen from conveying such persons, baggage or stores;
(*j*) all carriages and horses when moving under the orders of military authority for the purpose of being employed in His Majesty's military service;
(*k*) all animals accompanying any body of troops which are intended to be slaughtered for food or kept for any purpose connected with the provisioning of such troops; and
(*l*) all persons in charge of any carriage, horse or animal exempted under any of the foregoing clauses when accompanying the same under the circumstances mentioned in those clauses respectively,

shall be exempted from payment of any tolls—

(*i*) on embarking or disembarking, or on being shipped or landed, from or upon any landing place, or
(*ii*) in passing along or over any turnpike or other road or bridge, or
(*iii*) on being carried by means of any ferry,

otherwise demandable by virtue of any Act, Ordinance, Regulation, order or direction of any Legislature or other public authority in British India:

Provided that nothing in this section shall exempt any boats, barges or other vessels employed in conveying the said persons or property along any canal from payment of tolls in like manner as other boats, barges, and vessels.".

Rule 16.—The ferry shall ordinarily ply between sunrise and sunset, but the lessee may employ the boats in ferrying passengers across at any time after sunset, provided each boat so employed carries a light, which must be displayed in a conspicuous part of the boat, and shall be bound to ferry over at night, whenever called upon to do so, any police or Government officer travelling on duty together with his baggage and conveyance.

Rule 17.—The Magistrate may, if necessary, fix the times for the crossing of the mails and dâk-runners, and may, as occasion arises, vary such times. He shall in all such cases give notice in writing to the lessee of the times at which the mails are to be ferried over, and it shall thereupon become the duty of the lessee to see that arrangements are specially made for the crossing of the mails immediately on their arrival at the ferry ghat, and that no delay is allowed to occur in their transit.

Rule 18.—The lessee shall provide and keep in proper order, to the satisfaction of the Magistrate, the landing stages on both sides of the ferry, and shall move them when necessary according to the rise and fall of the water. He shall also provide proper rest-houses or travellers' sheds on the banks of the ferry as required by the Magistrate, and shall make all proper arrangements and provide all suitable accommodation on the ferry boats for passengers and goods traffic.

Rule 19.—The lessee shall mark on each boat the number of passengers, animals, and vehicles and the bulk and weight of the other things it is authorised to carry at a single trip, and if the Magistrate so directs, a safety line shall be painted round each boat, and it shall be the duty of the lessee to see that the boat is not so overladen as to sink below this line.

Rule 20.—When any ferry which has been leased for a given period is discontinued under the order of the Magistrate before the expiry of that period, the lessee shall be allowed a deduction in the rent payable for the unexpired portion of the term of the lease. If it be shown to the satisfaction of the Magistrate that the lessee has suffered any loss consequent on the discontinuance of the ferry, the Magistrate may allow him such compensation as he thinks is deserved.

Rule 21.—In the event of the ferry being discontinued before the expiry of the lease, either by order of the Magistrate or otherwise, all persons who have compounded for the tolls for its use shall be entitled to receive a refund calculated as in Rule 4, and unless the claims of all such persons have been satisfied by the lessee, the Magistrate shall have authority to satisfy the claims out of the deposit made by the lessee under Rule 8.

Rule 22.—The lessee shall, when required by the Magistrate or police officer above the rank of a constable to do so, but not otherwise, furnish all information in his power regarding suspicious persons or classes of persons who may have been, or may come to be, ferried over.

Rule 23.—The lessee shall be bound to furnish such returns of traffic as may, from time to time, be called for by the Magistrate, and for this purpose he shall keep up a register of traffic in the form to be prescribed by the Magistrate.

Rule 24.—If the lessee desires to establish communication across the ferry by means of a bridge of any kind, he shall first obtain the sanction, in writing, of the Magistrate, and shall, on obtaining such sanction, carry out any orders which the Magistrate may make regarding the opening of such bridge for the through passage of vessels and rafts. Such bridge shall on no account obstruct the free passage of the stream.

Rule 25.—The Magistrate may at any time require the lessee to repair or replace any boat which he considers to be in a dangerous state of disrepair, and the lessee shall thereupon be bound to repair or replace it as directed.

Rule 26.—Police officers will report at once any instance of mismanagement of a public ferry, the insecurity of the boats, landing-stages, slopes or approaches, and any other defect in the working of the ferry which may come to their notice.

Rule 27.—The ferry boats belonging to any public ferry shall not be plied when the current, wind, or state of the weather is such as to render the crossing unsafe and endanger the lives of the passengers.

Rule 28.—A register in the following form, showing the demand and collection on account of rents payable for tolls of public ferries, shall be kept up by the Magistrate:—

Receipts on account of ferry *farmed by* *at an annual rent of Rs.*

[Signature of officer holding sales.]

Serial No.	Details of payments.	Amount.	PAYMENT.					Remarks.
			Amount.	Date.	No. of challan.	Initials of Magistrate or Vice-Chairman.	Initials of Treasury officer.	
		Rs.	Rs.					

Rule 29.—A quarterly statement shall also be kept showing the demand, collection, and arrear up to date on account of rents for public ferries

FORM OF AGREEMENT.

The Secretary of State for India in Council doth hereby lease to me hereinafter called the lessee, son of , resident of mauza , pargana , thana , district ; and I, the said lessee, do hereby take the lease of the public ferry across the river , and situated on the road from to at the rent of Rs. upon and under the following terms and conditions, viz.—

1. I, the lessee, have deposited , with the intent that the Magistrate shall hold the same until the determination of the lease, as partial security for the due performance by me of the stipulations herein contained, and for the observance by me of the provisions of the Bengal Ferries Act, I (B.C.) of 1885, and the rules framed under it, and may deduct therefrom any rent which may become due, or penalties which may be awarded under sections 23, 24, and 25 of the said Act.

2. I, the lessee, do hereby acknowledge to have received a copy of the Rules under section 15 of the Act aforesaid, and to be aware of the provisions of section 10 of the Act, under which I am legally bound to conform to them. I also acknowledge to have received a list of the tolls to be levied at the ferry.

3. The lease to me is to be for , namely, from the to the and during this period I shall be bound to ply the ferry from the to the every year.

4. I hereby agree—

(*a*) (to provide boats for the ferry and) to keep the boats (provided by the Magistrate for the ferry) in proper repair;
(*b*) to employ a crew of men on each boat;
(*c*) to make at least crossings every day; and
(*d*) to (provide and) keep in order the landing-stages and the travellers' sheds at either or both banks of the river.

5. I shall not charge or demand tolls for ferrying over—

(*a*) Mails, mail-carts, dâk-runners and Government telegraph messengers on duty.
(*b*) Commissariat stores, animals and vehicles, when accompanied by a chalan from the Commissariat officer.
(*c*) Persons or property mentioned in section 3* of the Indian Tolls (Army) Act, 1901.

* *Vide* footnote to Rule 14 (*c*).

(*d*) Police and other public officers and process-serving peons when travelling on duty with their *bonâ fide* baggage, horses, palkies or other conveyances.
(*e*) Executive officers of the District Road Department when travelling on duty.
(*f*) Coolies engaged in repairing roads, with their tools and instruments.
(*g*) Persons carrying dead bodies or property sent in by the Police.

6. I shall not charge or demand tolls from persons who wade or swim across, or take cattle or other animals or property across at their own cost and risk, or from persons who cross themselves, or take other persons across without charge, in their own boats.

7. I hereby agree to pay the rent in the following instalments:—

	Date.	Rs. A. P.
1st	...	...
2nd	...	...
3rd	...	...
4th	...	...

But if at any time before the expiry of the period for which the ferry has been leased to me I be removed therefrom for any breach of the terms and conditions of the lease, or for any wilful breach of any of the rules under section 15 of the Act, I shall be liable to pay rent up to and including the instalment due next after my removal.

8. If the rates of toll are reduced during the currency of my lease, or the exemptions from the payment of it are extended, this agreement is to be modified accordingly. I shall be given a fair opportunity of satisfying the Magistrate as to the effect of the change, and if the terms proposed by him thereafter are not such as I can reasonably accept, I will, according to the law, immediately carry into effect the order reducing the rates of tolls, or extending the exemption from payment of it, but will at the same time state the amount of rent I may be willing to pay under the altered circumstances of the case. Should my offer appear to the Magistrate to be inadequate, it shall be competent to him to remove me and place another person in charge of the ferry, and for such time as I remain in charge of the ferry after the issue of the order reducing the rates of tolls, or extending the exemption from payment of it, I shall pay rent only at the rate tendered by me.

9. If I make default in the payment of the rent for the ferry, or of any penalty which may be lawfully imposed, or if I do not observe and perform the covenants herein contained, it shall be lawful for the Magistrate to remove me from the charge of the ferry, and to settle the same with some other person. After such removal, I shall not be entitled to any part of the proceeds of the ferry or to levy any toll therefor. And if the rent on re-letting the

ferry fall short of the amount at which it was leased to me, and the Government thereby incur loss, I shall be held responsible for such difference or loss, the amount of which may be deducted from my deposit. If the deposit does not cover the loss incurred, the rent due from me and the amount of tolls refunded by the Magistrate under Rule 21 of the rules under section 15 of the Act, the total amount which is deficient shall be recoverable in the manner set forth in section 12 of the Act.

10. I will not assign, sublet or part with the possession of the ferry without the previous consent, in writing, of the Magistrate.

11. I shall not claim any compensation on account of roads being closed for repairs, or on account of inundations or the breaking down of bridges.

Hazaribagh.

No. 1665T.M.—The 8th September 1902.—It is hereby notified that, under section 27 of the Bengal Municipal Act, III of 1884, as modified up to 1st November 1896, the Lieutenant-Governor is pleased to appoint Munshi Rahim Bux to be a Commissioner of the Giridih Municipality, in the district of Hazaribagh, *vice* Babu Annoda Prosad Mozumdar, deceased.

Mymensingh.

No. 1674T.M.—The 9th September 1902.—It is hereby notified for general information that the Lieutenant-Governor intends, in the exercise of the power conferred on him by section 290 of the Bengal Municipal Act, III of 1884, as amended up to 1st November 1896, to make the following rules and to impose the following conditions, subject to which the Commissioners of the Nasirabad Municipality may allow the owners and occupiers of holdings paying a water-rate, to lay down communication pipes from the service pipes of the Commissioners for the purpose of leading water to their premises for domestic purposes, unless good reasons are shown to the contrary within one month from the date of the publication of this notification within the aforesaid Municipality:—

1. The owner or occupier of any house or land requiring water to be laid on for domestic purposes, or requiring any addition or alteration to the existing water-supply, must apply for the same in a printed form to be supplied to him free of cost at the Commissioners' office. A specimen of the printed form is given in the schedule annexed hereto.

2. Every such applicant for a new connection shall pay a sum equal to one-third of the annual valuation of his holding, or in case where the one-third of the valuation is below Rs. 100, the sum of Rs. 100.

Provided that if the Commissioners at any time deem it practicable and consistent with the maintenance of an efficient water-supply, they shall be competent to allow owners and occupiers paying water-rate to take house connections without payment of any premium or at such other scale of premium as they may think proper.

3. Every applicant for a new house connection shall deposit the amount payable by him under Rule (2) before his application can be considered by the Commissioners.

4. Each holding shall have a separate connection, and extensions from the communication pipe of one holding to another will not be allowed.

5. A house connection shall comprise the following parts:—

(*a*) The brass or gun-metal ferrule inserted in the main supply pipe.

(*b*) The galvanized iron communication pipe from the ferrule to the meter or the spot where a meter would be placed if provided.

(*c*) The stop-cock and its surface box.

(*d*) The meter, if provided under section 295 of the Bengal Municipal Act or otherwise.

(*e*) The service pipes from the stop-cock to the taps.

(*f*) The taps.

6. All the fittings enumerated in the preceding paragraph shall be stamped duplicates of standard samples kept in the office of the Commissioners and approved by them in meeting. All fittings shall be tested and stamped by an officer of the Municipality before being fixed.

7. The meter shall be placed as near to the stop-cock as possible and in a position where it can be conveniently examined at all times. No meter shall be fixed under ground except in a brick well or chamber. No meter shall be disconnected or in any way interfered with except with the permission of the Commissioners.

8. The Commissioners shall depute some authorized person to read every meter not less than once a quarter, and shall give notice to the occupier at least 24 hours before the reading is recorded. If the quantity of water consumed in any quarter exceeds that to which the occupier is entitled, written notice to that effect shall be served upon him.

9. The house connection when fitted in position must be capable of standing a pressure of 100 feet, and no water shall be supplied until this test has been applied by the Commissioners.

10. The number of taps in a house or holding shall be fixed according to the annual valuation of the premises as follows :—

Annual valuation of holding.	Number of taps.
Under Rs. 100	1
From Rs. 100 to Rs. 199	2
From Rs. 200 to Rs. 499	3
From Rs. 500 to Rs. 1,500	5
And for every Rs. 500 or part thereof in excess of Rs. 1,500	1 additional tap.

The size of the ferrule will be decided by the Commissioners, but its diameter shall not differ from that of the communication pipe by more than quarter inch.

11. The diameter of the communication pipe will be determined with regard to the average pressure in the main supply pipe at the standpost nearest the house for which a connection is required and to the quantity of water to be supplied according to the provisions of section 295. The diameter of the pipe shall be such that it will be competent to deliver half the daily supply in six hours.

12. The stop-cock and its surface box shall be placed as near as practicable to the points where the service pipes enter the house or premises to be supplied, but must not be within any private premises. The surface box shall rest on brickwork foundations, and shall be so designed that it can be locked and the key of it shall remain under the control of the Commissioners.

13. The repair, alteration, removal or extension of all communication pipes and fittings shall be undertaken with the permission of the Commissioners and under the inspection and direction of the officer authorised by them in that behalf and not otherwise.

SCHEDULE.

Form of Application for house connection.

I.—Name of the Municipality.

II.—Name of the applicant and his parentage.

III.—$\frac{\text{Owner}}{\text{Occupier}}$ of holding No. , situate at Street.

IV.—(*a*) Annual valuation of the holding.

(*b*) Number of persons living permanently in the holding.

V.—I declare that Part VII of the Bengal Municipal Act, and the rules and conditions imposed by the Local Government under section 290 of the said Act, and the resolution of the Municipal Commissioners passed at a meeting held on , relating to house connections, have been read $\frac{\text{by}}{\text{out to}}$ me, and that I understand their contents, and that I agree to take the connection for domestic purposes in my said holding under the rules, &c., referred to above, or which may be made subsequently, and that these will be binding upon me, my heirs and successors generally; that I will have all works, connection, repair, extension, and removal executed either by an authorised plumber or by the municipal servants as the Chairman may direct; and that if the valuation of the holding be hereafter altered, I will cause the number of the taps, &c., to be regulated and all alterations to the other parts of the house connection to be carried out at my own expense according to the new valuation.

Signature of the applicant with date—

Signed in our presence—

1. ... ... } *Witnesses.*
2. ... ...

Report of the officer in charge of the water-works—

(*a*) as to the materials ;

(*b*) as to labour;

(*c*) as to time when and within which the connection, &c., to be commenced and finished;

(*d*) fee, &c., to be charged to the applicant.

Certificate of the cashier that the fee, &c., reported by the officer in charge of the water-works chargeable to the applicant has been credited to the Municipal Fund.

Order of the Chairman.

No. 1688 T.M.—The 9th September 1902.—It is hereby notified that the members of th Jamui Local Board, in the district of Monghyr, having at a meeting under section 25 of the Bengal Local Self-Government Act, III of 1885, requested the Lieutenant-Governor to appoint a Chairman, the Lieutenant-Governor is pleased under the said section to appoint Mr. J. Hezlett to be the Chairman of that Local Board.

Monghyr.

No. 1697T.M.—The 9th September 1902.—It is hereby notified for general information that, under section 8 of the Bengal Municipal Act, III of 1884 as amended up to 1st November 1896, the Lieutenant-Governor intends to extend the provisions of the Act to the town of Ulubaria and its adjoining villages, named in the margin, which lie in the district of Howrah, unless good reasons are shown to the contrary within one month from the date of publication of this notification within the area affected. The boundaries of the proposed Municipality, which will be called the Ulubaria Municipality, will be as follows:—

Howrah.

Fulesvar.
Baikantapur.
Jagannathpur.
Latibpur.
Nona.
Hatkaliganj.

Boundaries of the proposed Municipality at Ulubaria.

On the North.—A road running just on the west of Biri Chandi Thakurtola, parallel to a khal up to Hatmarai, where it meets on the Banshpati khal, and thence to Hem Babu's *khoti*, and thence a straight line drawn up to Kotalghata *bund*.

On the East.—River Hooghly and thence a line drawn parallel to Rajapur khal up to railway embankment, and thence a line running north-west up to Tulshi Sircar's house, where it meets Kotalghata *bund* (Tulshi Babu's house is excluded from the Municipality).

On the South.—River Hooghly to Balai Suri's house and thence to Punchanontola, and thence a straight line up to Tinpukuria and thence along the Midnapur Canal up to Promotho and Shosi Ghoses' gardens.

On the West.—From Promotho and Shosi Babus' gardens up to Cuttack Road, and thence through a road west of Bhuth Nath Bagdi's house up to Bengal-Nagpur Railway embankment, and thence through the western side of Abinash Babu's house to Biri Chandi Thakurtola.

No. 1712T.M.—The 11th September 1902.—It is hereby notified that, under section 11 of the Bengal Local Self-Government Act, III of 1885, the Lieutenant-Governor is pleased to appoint the following gentlemen to be members of the several Local Boards in the district of Nadia:—

Nadia.

Local Boards.	Names of Members.
Sadar ...	Revd. E T. Butler. Mr. F. J. Smith. Molla Khodadad. Babu Surendra Nath Goswami.
Ranaghat ...	Babu Gati Krishna Neogy, Subdivisional Officer. „ Surendra Kumar Mukerji. „ Krishna Behary Roy.
Kushtia ...	Mr. Manmatha Krishna Deb, Subdivisional Officer. „ B. T. Boileau. Babu Kali Nath Saha.
Meherpur ...	Babu Ramoni Mohan Mullick. Mr. K. M. Hamilton. „ D. L. Stewart.
Chuadanga ...	Mr. W. LeBas Tahourdin, Subdivisional Officer. Babu Kalipada Bagchi. „ Akhoy Kumar Moitra.

2. The Lieutenant-Governor is also pleased to appoint the following gentlemen, under section 10 of the Act, to be members of the Local Boards mentioned against their names in the above district:—

Local Board.	Names of Members
Kushtia ...	Babu Purna Chandra Roy. Munshi Hossen Ali. Babu Bidhu Bhusan Mazumdar.

No. 1753T.M.—The 13th September 1902.—It is hereby notified for general information that, in exercise of the power conferred on him by section 27 of the Calcutta Survey Act, 1887 (Bengal Act I of 1887), the Lieutenant-Governor is pleased to extend the provisions of the said Act to the part of the suburban area added to the Town of Calcutta by the Calcutta Municipal Consolidation Act, 1888 (Bengal Act II of 1888), and which is comprised within the area of Calcutta as defined in Schedule I of Bengal Act III of 1899.

24-Parganas.

No. 1636T.M.—The 15th September 1902.—Under Rule 9 of the rules framed under section 5 of the Local Authorities Loan Act, 1879, it is hereby notified for general information that the Lieutenant-Governor intends to sanction the following application from the Commissioners of the South Barrackpore Municipality for a loan of Rs. 2,500 from Government, bearing interest at the rate of four per cent. per annum, and repayable in five equal half-yearly instalments of Rs. 530-5-9 each, unless good reasons are shown to the contrary within one month from the date of the publication of this notification within the said Municipality.

Application from the Commissioners of the South Barrackpore Municipality for a loan of Rs. 2,500.

The work or works for the construction or repairs of which the loan is required and an estimate of the cost thereof.	The amount which it is proposed to borrow.	The fund or funds on the security of which it is proposed to borrow.	The law or laws under which the said fund or funds is or are levied, received or held.	Receipt of Loan. (a) The period for which the loan is required.	(b) Rate of interest.	(c) The number of instalments, if any, in which it is proposed that the loan should be taken.	(d) The amount of each instalment.	(e) The dates proposed for receiving each such instalment.	Repayment of Loan. (f) Date of instalment, if any.	Amount of each instalment.	All existing prior charges upon the funds of the local authority.
1	2	3	4	5	6	7	8	9	10	11	12
For repairing all the roads damaged during the flood, at a cost of Rs. 4,000.	Rs. 2,500.	South Barrackpore Municipal Fund.	Bengal Municipal Act, III (B.C.) of 1884, as modified up to November 1899.	Two and-a-half years.	Four per cent. per annum.	One instalment.	Rs. 2,500.	1st December 1902.	Five half-yearly instalments payable on the 1st June and 1st December every year, commencing with 1903, till the loan is paid off.	Rs. 530-5-5.	

A DETAILED ACCOUNT OF THE REVENUE AND EXPENDITURE OF THE LOCAL AUTHORITY FOR THE THREE PRECEDING YEARS.

Revenue. Sources from which the revenue was derived.	Amount for 1899-1900.	Amount for 1900-1901.	Amount for 1901-1902.
	Rs. A. P.	Rs. A. P.	Rs. A. P.
Opening balance	2,615 10 2	1 1 2	1,036 6 11
A1. Tax on houses and lands	2,843 5 0	1,882 3 0	1,656 1 0
2. Tax on animals	95 5 3	137 8 1	136 8 1
Do. vehicles	171 8 0	279 15 11	33 5 4
Cart registration fees	426 0 0	230 0 0	202 0 0
A3. Tax on professions and trade	105 0 0	127 0 0	102 0 0
A7. Latrine fees	4,739 14 3	2,189 5 0	1,986 11 6
A8. Tax on persons	7,127 8 3	2,757 13 0	3,429 8 3
A9. Warrant fees	128 14 0	164 7 9	89 14 0
B1. Pounds	736 8 3	271 11 0	207 8 0
2. Hackney carriage	169 0 0	155 0 0	142 10 7
C1. Rent of lands, &c.	.....	4 8 0	4 0 0
2. Sale-proceeds of lands, &c.	38 8 0	4 6 0	11 8 0
6. Market, &c.	25 0 0	... .	.....
8. Burning ghat	331 8 0	245 8 0	248 0 0
10. Fines	117 0 0	62 0 0	96 4 0
D1. From District Board	.....	.... .	18 0 0
E1. Recoveries on account of services rendered to private individuals.	134 14 6	97 3 3	120 0 0
2. Other items	48 13 0	38 2 0	136 11 11
Cost of cases recovered	22 5 3	1 5 0	10 4 0
Advances	190 0 0	...	155 8 0
Deposits	81 4 0	101 8 0	372 0 0
TOTAL .	20,147 13 11	8,901 12 2	9,096 5 7

Expenditure. Objects on which the expenditure was incurred.	Amount for 1899-1900.	Amount for 1900-1901.	Amount for 1901-1902.
	Rs. A. P.	Rs. A. P.	Rs. A. P.
A1. General establishment ...	663 2 6	583 11 3	542 12 0
Cost of audit	147 0 0	150 0 0	86 0 0
2. Collection establishment ...	1,046 3 0	638 6 6	745 2 9
Assessment	.....	130 2 6	134 0 0
Refunds	100 0 0	.....	8 0 0
B4. Rewards for destruction of wild animals.	3 12 0	.....	0 4 0
C2. Drainage—			
Sluice gate, Khurda	66 4 6	.....	.....
Establishment	401 2 9	639 12 3	.....
Extra coolie	152 10 9	46 2 3	55 13 9
Repairs	191 0 0	70 3 6	86 10 6
3. Conservancy—			
Public latrine	500 0 0	449 8 6	138 12 9
Private privies	5,370 2 8	1,961 3 6	2,704 2 0
Road watering	166 2 0	171 5 9	72 13 0
Road cleaning	1,915 3 3	570 1 6	670 11 0
4. Hospitals and dispensaries	562 4 0	349 3 0	734 5 9
Plague precautionary measures.	259 3 9	76 3 3	.....
5. Vaccination	125 0 0	63 0 0	30 0 0
7. Pounds	10 10 3	4 0 6	26 3 6
10. Public Works—			
Establishment	.....	.....	635 6 3
Roads (new works)	50 0 0	.....	.....
Do. (repairs)	4,171 0 0	201 13 9	807 9 2
Census	.....	5 9 6	33 0 0
D. Schools and colleges	542 0 0	153 3 0	202 0 0
E. Contribution—			
Contribution to District Board.	500 0 0	250 0 0	225 0 0
Contribution to Panihati Municipality.	.....	800 0 0	469 5 0
F1. Interest on loan...	94 3 4	.....	.....
3. Other items—			
Printing	199 11 3	254 7 9	167 9 0
Law charges	113 3 0	60 3 6	61 1 9
Provident Fund	18 0 9	16 6 6	23 5 0
Miscellaneous	15 0 0	0 2 0	5 5 3
Disposal of dead	67 4 0	47 4 0	30 0 0
G3. Repayment of loans ...	2,400 0 0	.....	.....
Advances	107 0 0	.....	155 8 0
Deposits	376 8 0	102 0 0	66 8 0
Total ...	20,146 12 9	7,765 5 3	8,095 3 0
Closing balance	1 1 2	1,036 6 11	111 2 7
GRAND TOTAL ...	20,147 13 11	8,901 12 2	9,096 5 7

The 27th January 1902.

RASH BEHARI SIRCAR,
Chairman

No. 1806T M.—The 16th September 1902.—In exercise of the power conferred by section 567 (1) of the Calcutta Municipal Act, III of 1899, the Lieutenant-Governor intends to make the following Rule to be added to Rule 2 of the Rules in Schedule IV of the Act, unless valid objections are raised to the contrary within six weeks from the date of the publication of this notification in the *Calcutta Gazette* :—

"(*c*) For the purposes of this rule the term 'year' shall mean the official year commencing on the 1st day of April."

E. W. COLLIN,
Offg. Secy. to the Govt. of Bengal.

DECLARATION.

No. 1704T.M.—The 11th September 1902.—Whereas it appears to the Lieutenant-Governor of Bengal that land is required to be taken up by Government at the expense of the District Board of Gaya for a public purpose, viz., for a dispensary building proposed to be constructed at Rafiganj, in the village of Abdulpore, pargana Chaikawan, zilla Gaya, it is hereby declared that for the above purpose a piece of land measuring, more or less, 3 bighas and 3·80 chitaks of standard measurement, is required. The land is bounded on the north by the Obra-Rafiganj district road, on the south by the holdings of Modan Singh and Bharat Dhobi, on the east by the holdings of Banaudhi Barhi, and on the west by the holdings of Budhram Dhobi and Nandlal Kundu.

Gaya.

A plan of the land may be inspected in the office of the District Engineer, Gaya.

This declaration is made, under the provisions of section 6 of Act I of 1894, to all whom it may concern.

E. W. COLLIN,
Offg. Secy. to the Govt. of Bengal.

DECLARATION.

No. 1708T.M.—The 11th September 1902.—Whereas it appears to the Lieutenant-Governor of Bengal that land is required to be taken up by Government at the expense of the Naraingunge Municipality for a public purpose, viz., for the construction of a cemetery for the European residents of the town in the village of Krishnapur, pargana Kashipur, zilla Dacca, it is hereby declared that for the above purpose a piece of land measuring, more or less, 1 bigha 16 cottahs and 13 dhurs of standard measurement, is required. The land is bounded on the north by the cultivated land of Abbas, on the south by the cultivated land of Arabdi, on the east by the cultivated land of Abbas, and on the west by the municipal road cutting.

Dacca.

A plan of the land may be inspected in the office of the Chairman of the Naraingunge Municipality.

This declaration is made, under the provisions of section 6 of Act I of 1894, to all whom it may concern.

E W. COLLIN,
Offg. Secy. to the Govt. of Bengal.

The Calcutta Gazette.

WEDNESDAY, SEPTEMBER 17, 1902.

PART II.

Advertisements.

[N. B.—Advertisements, Notices, &c., intended for insertion in this part of the Gazette cannot be received after Noon on Monday.]

LAND SALE NOTICES.

APPENDIX XXX.

[See Chapter III, Rule 9]

Advertisement of Sale.

NOTICE is hereby given that the undermentioned plots of land, no longer required by Government, situated along the Assam-Bengal Railway, in the district of Chittagong, will be put up to sale at 11 o'clock on Monday the 22nd September 1902, corresponding with the 6th of Ashwin 1309 B.S., at the Collector's office, Chittagong

The purchasers of the several plots of land will be subject to the following conditions :—

1st.—The purchasers will have no power to make any excavation on the land nearer than fifteen feet from the Railway fencing, or plough the land closer than three feet from its foundation.

2nd—If the amount of purchase-money does not exceed Rs 100, the whole amount must be paid down at once.

3rd.—If the amount of purchase-money exceeds Rs. 100, one-fourth of the amount must be immediately deposited. If the balance be not paid by noon of the fifteenth day after the sale, reckoning the day of sale as one, or if that day be a close holiday, then by noon of the first succeeding office day, the sale shall be cancelled, the sum deposited being forfeited to Government and the lot again put up for sale at the risk of the defaulting purchaser, after issue of advertisement, as in the case of original sale.

4th—The plots of land will be sold revenue-free to the highest bidders.

5th.—The purchasers shall be put in possession on receipt by the Collector of the orders of the Board confirming the sales.

Consecutive lot number	Name of district.	Mauza.	Number of mile on which land is situate.	Situated on which side of the Railway.	Approximate area of lot in kanis and acres.		Land excluded from sale from each plot.		Commencement and termination of lot.	Boundary of lot.
					Maghi kani.	Acre	Reasons for exclusion	A. R. P.		
1	2	3	4	5	6		7		8	9
					Kani	A. R. P.				
1	Chittagong ...	Bhatiary	8th mile	East side	43·83	17 2 5	Nil	Nil	Nil	Nil.
2	Ditto .	Sonaicherry .	14th do.	West side	28·57	11 1 27	,,	,,	,,	,,
3	Ditto ...	Ramsberia . ,,	18th do.	Ditto	25·68	10 1 3	,,	,,	,,	,,
4	Ditto ..	Katgar	20th do.	East side	36·80	14 1 11	,,	,,	,,	,,
5	Ditto ...	Torial	27th do	West side	29·37	11 2 38	,,	,,	,,	,,
6	Ditto ..	Wahedpur .	32nd do.	Ditto	25·51	9 3 29	,,	,,	,,	,,
7	Ditto ..	Gobania .	36th do	Ditto	23·30	9 - 1[4]	,,	,,	,,	,,
8	Ditto ..	Azamnagar	45th do.	East side	21·10	8 1 30	,,	,,	,,	,,

Chittagong, the 26th July 1902.

E. GEARE, Collector.

Advertisement of Sale.

NOTICE is hereby given that the undermentioned plots of land, no longer required by Government, situated along the Assam-Bengal Railway, in the district of Tippera, will be put up to sale at 12 o'clock on the 26th day of September 1902, corresponding with the 10th Asvin 1309 Fasli, at the office of the Collector of Tippera.

The purchasers of the several plots of land will be subject to the following conditions:—

1st.—The purchasers will have no power to make any excavations on the land nearer than 15 feet from the railway fencing, or plough the lands closer than 3 feet from its foundation.

2nd.—If the amount of purchase-money does not exceed Rs. 100, the whole amount must be paid down at once.

3rd.—If the amount of purchase-money exceed Rs. 100, one-fourth of the amount must be immediately deposited. If the balance be not paid by noon of the fifteenth day after the sale, reckoning the day of sale as one, or if that day be a close holiday then by noon of the first succeeding office day, the sale shall be cancelled, the sum deposited being forfeited to Government and the lot again put up for sale at the risk of the defaulting purchaser, after issue of advertisement, as in the case of original sale.

4th.—The plots of land will be sold revenue-free to the highest bidders.

5th.—The purchasers shall be put in possession on receipt by the District Collector of the orders of the Board confirming the sale.

Consecutive lot No.	Name of district.	Pargana and mauza.	Number of mile on which land is situate.	Situated on which side of the railway.	Approximate area of lot in bighas and in acres.		Land excluded from sale from each lot.		Commencement and termination of lot.	Boundary of lot.
					B. K. C.	A. R. P.	Reasons for exclusion.	A. R. P.		
1	2	3	4	5	6		7		8	9
1	Tippera ...	Parrana Homnabad, mauza Uttarkul.	At mile No. 78.	South-west of Railway line.	3 6 2	1 0 14·9	.....	.....	Lots Nos. 1 to 18	*North*—Mauza Uttarkul. *South*—Mauza Uttarkul and Railway line. *East*—Mauza Uttarkul. *West*—Railway line.
2	Ditto ...	Pargana ditto, mauza Noagaon.	Ditto	Ditto	0 15 5	0 1 ·4		.....	Ditto	*North*—Mauza Uttarkul and Railway line. *South*—Mauza Noagaon. *East*—Railway line and mauza Noagaon. *West*—Mauza Noagaon.
3	Ditto ...	Pargana ditto, mauza Ashkanta.	At mile No. 75.	East of Railway line.	1 17 0	0 2 19·5	.....	.....	Ditto	*North*—Railway line. *South*—Mauza Ashkanta. *East*—Railway line. *West*—Mauza Ashkanta.
4	Ditto ...	Pargana Homnabad, mauza Lakshanu.	At mile No. 0.	Within ¼ mile of the Railway station.	1 8 11	0 1 35·5	..	.....	Ditto ...	*North*— *South*— *East*— } Mauza Lakshanu. *West* District Board road.
5	Ditto ...	Pargana Mehar, mauza Upalata.	At mile No. 11.	East of Railway line.	0 17 15	0 1 7·4	.....	.....	Ditto	*North*—Mauza Upalata. *South*—Railway line. *East*— *West*— } Mauza Upalata.
6	Ditto ...	Pargan Meharkul mauza Bejoypur.	At mile No. 10.	North of Railway line.	2 16 4	0 3 24·7	.....	.....	Ditto	*North*—Mauza Bejoypur. *South*—Bikrampur land attached to the Railway fencing. *East*—Bejoypur mauza. *West*—Railway line.
7	Ditto ...	Pargana Mehar, mauza Naora.	At mile No. 9½.	East of Railway line.	5 0 8	1 2 25·7	.....	.. ..	Ditto	*North*—Railway line. *South*—Southern bank of Dighi. *East*—Khal or boundary of mauza Horulia. *West*—Dighi water.
8	Ditto ...	Ditto ...	Ditto	Ditto	8 7 8	2 3 2·9	.. ...	.....	Ditto	*North*—Railway line. *South*—Southern bank of Naora Dighi. *East*—Naora Dighi. *West*—Chandra Kumar Chakerbuti Jahiraddi Patwari Moniram Dhupi.
9	Ditto ...	Pargana Meharkul mauza Sadipur.	At mile No. 7.	South of Railway line.	47 5 14	15 2 21·4	.....	.	.	*North*— *South*— } Gangjuri khal. *East*—District Board road. *West*—Gangjuri khal.
10	Ditto	Ditto ...	Ditto	Ditto	32 13 8	10 3 5 6	.....	.....	.....	*North*—Gangjuri khal. *South*—Sadpur. *East*—Railway line. *West*—District Board road.
11	Ditto ...	Ditto ..	Ditto	Ditto	10 14 4	3 2 6·0	.....	.....	.....	*North*—Gangjuri khal. *South*—Jirat Gazi and khash patit. *East*—District Board road. *West*—Gangjuri khal.
12	Ditto ...	Ditto ..	Ditto	Ditto	14 12 12	4 3 14·2	.....	.....	.....	*North*—Rajabati. *South*—Dakatia river. *East*—District Board road. *West*—Gangjuri khal.
13	Ditto ..	Pargana ditto, mauza Barapara.	At mile No. 10.	North of Railway line.	10 13 13	3 2 2·8	.....	.....	.....	*North*—Gangjuri khal. *South*—Khal or Charpara mauza. *East*—Khal, khal side and District Board road. *West*—Dakshin Bejoypur.
14	Ditto ...	Pargana Tora, Tapa Ibrahimpur.	At mile No. 17.	East of Railway line.	120 13 14	30 3 23·8	.....	.....	.....	*North*—Mauza Toragor. *South*—Railway line. *East*—Mauza Toragor. *West*—Hajiganga khal.
15	Ditto ...	Pargana ditto, mauza Kangnish Hatila.	At mile No. 15.	Ditto	98 9 4	32 2 6·9	.....	.....	Lots Nos. 1 to 18...	*North*—Railway line. *South*—Kangnish mauza. *East*—Khal of Sholkhali. *West*—Kangnish.
16	Ditto ...	Pargana ditto, mauza Panchbaria.	At mile No. 23.	Ditto	31 14 12	10 1 38·6	.....	.....	.....	*North*—Debpur brickfield. *South*— *East*— *West*— } Mauza Panchbaria.
17	Ditto ...	Pargana ditto, mauza Debpur.	Ditto	Ditto	43 7 14	14 1 10 9	.....	... ..	.....	*North*—Railway line. *South*—Debpur brickfield. *East*— *West*— } Debpur mauza.
18	Ditto ...	Pargana ditto, mauza Panchbaria Sota Sundar.	Ditto	Ditto	2 13 8	0 3 21·4	.....	.....	.....	*North*—Panchbaria brickfield. *South*—Dakatia river. *East*—Mauza Panchbaria Sota Sundar. *West*—Mauza Panchbaria Sota Sundar.

Tippera Collectorate, the 2nd August 1902.

H. W. P. SCROOPE, Collector.

Notification A.

NOTICE is hereby given, under sections 6 and 13, Act XI of 1859, that the undermentioned estates and shares of estates in the district of Hooghly will be put up for sale at the office of the Collector of that district on the 25th September 1902 at 12 noon for arrears of revenue and other demands which by law are realisable as arrears of land revenue.

When in columns 5, 7, and 9 of the appended statement it is stated that only a share is to be sold, it is to be understood that a separate account is kept for that share.

Tauzi No.	Name of mahal and pargana.	Sadar jama of whole estate.	Whether the whole estate is to be sold.	If only a share is to be sold, specification of such share or shares.	Names of proprietors of property to be sold.	If only a share is to be sold, the sadar jama of such share.	If the whole estate is to be sold, the arrears due from it.	If only a share is to be sold, the arrears due from it.
1	2	3	4	5	6	7	8	9
4082, residuary.	Kalupukhuria, thana Pandua, pargana Arambagh.	Rs. A. P. 13,526 1 1	.....	Residuary, *i. e.*, 3 annas 13 gandas 1 cura 1 kranti share of the estate.	Prem Chand Roy, Rama Lodo Roy, and others of Madhobpur, thana Arambagh.	Rs. A. P. 2,253 9 5	Rs. A. P.	Rs. A. P. 7,574 10 4

Hooghly Collectorate, Chinsura, the 30th July 1902. R. C. HAMILTON, Collector.

Notification A.

NOTICE is hereby given, under sections 6 and 13, Act XI of 1859, that the undermentioned estates and shares of estates in the district of Chittagong will be put up for sale at the office of the Collector of that district on the 26th September 1902 at 12 A.M. for arrears of revenue and other demands which by law are realisable as arrears of land revenue.

When in columns 5, 7 and 9 of the appended statement it is stated that only a share is to be sold, it is to be understood that a separate account is kept for that share.

Tauzi No.	Name of mahal and pargana.	Sadar jama of whole estate.	Whether the whole estate is to be sold.	If only a share is to be sold, specification of such share or shares.	Names of proprietors of property to be sold.	If only a share is to be sold, the sadar jama of such share.	If the whole estate is to be sold, the arrears due from it.	If only a share is to be sold, the arrears due from it.
1	2	3	4	5	6	7	8	9
2066 2160 1429	Thana Hathazari, Taraf Krishna Kishore Kanungoe.	Rs. A. P. 645 6 7	Only a share will be sold.	Only share No. 1 and no other share will be sold.	Fazal Ahmed, Bazal Samad and others.	Rs. A. P. 594 13 6	Rs. A. P.	Rs. A. P. 131 8 4

N.B.—The amount shown in column 9 represents the arrear due for kist ending 25th May 1902.

Chittagong, the 16th August 1902. P. E. CAMMIADE, Offg. Collector.

Notification B.

NOTICE is hereby given, under sections 5 and 13, Act XI of 1859, that unless the arrears mentioned below are paid on or before the next latest date of payment, viz., the 28th June 1902, the undermentioned estates or shares of estates in the district of Tippera will be put up for sale at the office of the Collector of that district on the 26th September 1902 at 12 o'clock for the said arrears.

When in columns 5, 7 and 9 of the appended statement it is stated that only a share is to be sold, it is to be understood that a separate account is kept for that share.

Tauzi No.	Name of mahal and pargana.	Sadar jama of whole estate.	Whether the whole estate is to be sold.	If only a share is to be sold, specification of such share or shares.	Names of proprietors of property to be sold.	If only a share is to be sold, the sadar jama of such share.	If the whole estate is to be sold, the arrears due from it.	If only a share is to be sold, the arrears due from it.	Nature and amount of demand for which to be sold.
1	2	3	4	5	6	7	8	9	10
1925	Pargana Uttar Sahapur, char near Nagarer Kandi, No. 211.	Rs. A. P 1,296 10 9	Whole ...	... ...	Ishan Chandra Datta and others.	Rs. A. P ..	Rs. A. P 302 9 4	Rs. A. P	Rs. A. P. 201 2 4

Tippera Collectorate the 29th May 1902. H. W. SCHOOPE, Offg. Collector.

Advertisement of Sale.

NOTICE is hereby given that the undermentioned plots of land, no longer required by Government, situated along the Assam Bengal Railway, in the district of Tippera, will be put up to sale at 12 o'clock on the 3rd day of October 1902, corresponding with 17th Assin (1309 Fasli) at the office of the Collector of Tippera.

The purchasers of the several plots of land will be subject to the following conditions:—

1st.—The purchasers will have no power to make any excavations on the land nearer than 15 feet from the railway fencing, or plough the lands closer than three feet from its foundation.

2nd.—If the amount of purchase-money does not exceed Rs. 100, the whole amount must be paid down at once.

3rd.—If the amount of purchase-money exceed Rs. 100, one-fourth of the amount must be immediately deposited. If the balance be not paid by noon of the fifteenth day after the sale, reckoning the day of sale as one, or if that day be a close holiday, then by noon of the first succeeding office day, the sale shall be cancelled, the sum deposited being forfeited to Government, and the lot again put up for sale at the risk of the defaulting purchaser after issue of advertisement as in the case of original sale.

4th.—The plots of land will be sold revenue-free to the highest bidders.

5th.—The purchasers shall be put in possession on receipt by the District Collector of the orders of the Board confirming the sale.

Consecutive lot No.	Name of district.	Pargana and mauza.	Number of mile on which land is situate.	Situated on which side of the railway.	Approximate area of lot in bighas and in acres.		Land excluded from sale from each lot.		Commencement and termination of lot.	Boundary of lot.
					B. K. C.	A. R. P.	Reasons for exclusion.	A. R. P.		
1	2	3	4	5	6		7		8	9
19	Tippera	Pargana Meharkul, mauza Dharmapur.	At mile No. 95.	West of Railway line	6 6 2	2 0 13·5	.....	.....	Lot Nos. 19 to 26	(1) *North*—Comilla station yard. *South*—Level cross in Comilla station yard. *East*—Comilla Railway station. *West*—Mauza Dharmapur or District Board road.
20	Ditto ..	Ditto ..	Ditto	Ditto	1 2 12	0 1 20·2	.....	.....	Ditto ...	(2) *North*—Comilla station yard. *South*—District Board road. *East*— *West*—} Relinquished land.
21	Ditto ..	Pargana ditto, mauza Badarpur.	At mile No. 97.	North of Railway line.	7 19 9	2 2 21·9	.....		Ditto ...	(3) *North*—District Board road embankment of Gum river. *South*—Golapkha, Kadirboksh and mauza Badarpur. *East*—Homestead land and cultivated land of Golapkha and Kadirboksh. *West*—Railway line.
22	Ditto ...	Pargana Lauhagar, mauza Ram Chandrapur.	At mile No. 110.	Ditto	23 6 10	7 2 34·1	.....		Ditto ...	(4) *North*— *South*—} Ramchandrapur. *East*—Railway line. *West*—Ramchandrapur.
23	Ditto ..	Ditto ...	Ditto	Ditto	18 1 2	5 3 35·1	.....	.....	Ditto ...	(5) *North*— *South*— *East*—} Ramchandrapur. *West*—Railway line.
24	Ditto ...	Pargana Homnabad, mauza Kakaia.	At mile No. 5.	East of Railway line.	94 5 10	31 0 20·7	...	.....	Ditto ...	(6) *North*—Mauza Kakaia. *South*—Railway line. *East*—Mauza Kakaia. *West*—Kurjan khal.
25	Ditto .	Pargana Nuunagar, mauza Nakhora.	At mile No. 114.	South of Railway line.	1 11 4	0 2 2·5	,,	,,	Ditto .	(7) *North*—Nakhora and Railway line. *South*—Nakhora. *East*—Railway line. *West*—Nakhora.
26	Ditto ...	Pargana Lauhagar, mauza Pachara.	At mile No. 105.	North of Railway line.	1 1 11	0 1 17·255	.....	.....	Ditto ..	(8) *North*—Asad Gani. *South*—Bank of tank. *East*—Nabab Ali. *West*—District Board road.

Comilla, the 12th August 1902.

H. W. P. SCROOPE, Collector.

NOTICE is hereby given, under sections 5 and 13, Act XI of 1859, that unless the arrears mentioned below are paid on or before the next latest date of payment, viz, the 28th September 1902, the undermentioned estates or shares of estates in the district of Muzaffarpur will be put up for sale at the office of the Collector of that district on the date to be fixed for the sale of the estates and shares in arrears of revenue for the kist of September 1902.—

Tauzi No	Name of mahal and pargana.	Sadar jama of whole estate.	Whether the whole estate is to be sold.	If only a share is to be sold, specification of such share or shares.	Names of proprietors and property to be sold.	If only a share is to be sold, the sadar jama of such share.	If the whole estate is to be sold, the arrears due from it.	If only a share is to be sold, the arrears due from it.	Nature and amount of demands for which to be sold.
1	2	3	4	5	6	7	8	9	10
280	Jarung Vishnath Singh, pargana Barail	Rs. A. P. 566 9 1	The whole	.....	Babu Dabi Prosad Singh and others.	Rs. A. P.	Rs. A. P. 36 5 9	Rs. A. P.	Rs. 35-5-9 on account of arrears of land revenue due for kist June 1902
2153 R,8	Abul Hassanpur Manraj, Chakla Gurjaul, pargana Bisara.	810 3 0	... ..	Residuary share— As G C K. P. D. Abul Hassanpur 16 0 0 0 0 0 Tojaul Buzrug . 9 0 0 0 0 0 Rampur Paunt 16 0 0 0 0 0 Paunt-Jairam ... 16 0 0 0 0 0 Barahroop 9 12 0 0 0 0 Kanti . 9 12 0 0 0 0 Barahroop Baharam 16 0 0 0 0 0 Ghataro Chattarbhooj . 9 0 0 0 0 0 Ghataro Gopi Singh . 9 0 0 0 0 0 Bahlolpur 16 0 0 0 0 0 Dharampur Jurung ... 9 0 0 0 0 0 Mohamadpur Rohua 16 0 0 0 0 0 Bhugwanpur Tand 13 4 0 0 0 0 Sherpur 13 4 0 0 0 0 Pertap Tand ... 5 17 1 1 0 0 Wafapur Banthoo 16 0 0 0 0 0 Rampur Banthoo 16 0 0 0 0 0 Bidhichundpur 16 0 0 0 0 0 Sangoputti 16 0 0 0 0 0 Chuk Mohamad Warris 13 4 0 0 0 0 Sinhwa Kalban 8 17 3 1 1 10	Rashbari Singh and others.	•538 1 11	..	268 5 8	Rs. 268-5-8 due on account of arrears of revenue for the kists of March and June 1902, i.e., Rs. 134-10-4 for kist March 1902 and Rs. 134-6-4 for kist June 1902.

Muzaffarpur Collectorate, the 27th August 1902. E. V. LEVINGE, Collector.

[*Sale Notification under Section 7, Act XI of 1859.*]

Notification A.

NOTICE is hereby given, under sections 6 and 13, Act XI of 1859, that the undermentioned estates and shares of estates in the district of Patna will be put up for sale at the office of the Collector of that district on the 22nd September 1902 at 12 A. M. for arrears of revenue and other demands which by law are realisable as arrears of land revenue.

When in columns 5, 7 and 9 of the appended statement it is stated that only a share is to be sold, it is to be understood that a separate account is kept for that share.

Tauzi No.	Name of mahal and pargana.	Sadar jama of the whole estate.	Whether the whole estate is to be sold.	If only a share is to be sold, specification of such share or shares.	Names of proprietors of property to be sold.	If only a share is to be sold, the sadar jama of such share	If the whole estate is to be sold, the arrears due from it	If only a share is to be sold, the arrears due from it.
1	2	3	4	5	6	7	8	9
		Rs. A. P				Rs A. P.	Rs. A. P	Rs A. P.
56	Damodarpur Beldha, pargana Pilich.	4,468 5 9		4a 16d. ijmal .. .. .. All other shares than that specified will be excluded from sale.	Lalan Sahu, Lachhoman Sahu and others	1,340 6 1		947 1 3
169	Rampur Bedhna Nial, pargana Bhimpur.	998 8 0	.....	15a. 8d. 13k. 6b. 10p. 7r ijmal All other shares than that specified will be excluded from sale.	Kesho Lal Vogairah.	963 1 6		9 5 10
220	Salampur Ajaipur, pargana Beswak	641 1 1	Entire	..	Jia Ram		39 15 6	
227	Shahpur Augari, mauze Shahpur Augari Chandipur Majra Sitalpur, pargana Beswak.	5,334 6 6	Do ...		Ikbal Ali Khan Vogairah.		6 5 10	
760	Sham Manohar Singh Emadpur Sahia ratora, Khosropur ufrol, pargana Ghyaspur	1,098 3 9	.. .	Sahra Ratora, 9a. 18d. 15k 8b. 14p. 16r. 2t 9 ijlwasi 10 bat. Khosropur ufrol, 16a ijmal All other shares than that specified will be excluded from sale.	Shah Khane Zad Hussain Vogairah Balmakund Singh Vogairah.	512 13 0	.	14 4 18

J. G. CUMMING, Collector.

Sale Notice.

NOTICE is hereby given, under sections 6 and 13, Act XI of 1859, that the undermentioned estates and shares of estates in the district of 24-Parganas will be put up for sale at the office of the Collector of that district on the 22nd September 1902 at 12 o'clock noon for arrears of revenue and other demands which by law are realisable as arrears of land revenue.

When in columns 5, 7 and 9 of the appended statement it is stated that only a share is to be sold, it is to be understood that a separate account is kept for that share, and that the other share or shares are excluded from sale.

Class I.—Permanently-settled estates.

Consecutive No	Tauzi No	Name of pargana and mahal.	Sadar jama of the whole estate.	Whether the whole estate is to be sold	If only a share is to be sold, the specification of such share	Names of proprietors of property to be sold.	If only a share is to be sold, the sadar jama of such share	If the whole estate is to be sold, the arrears due from it.	If only a share is to be sold, the arrears due from it
1	2	3	4	5	6	7	8	9	10
			Rs A P				Rs A. P.	Rs. A. P.	Rs A P.
1	1	Magura, Chotla, and others.	5,423 12 2		Excluding 8a share, the remaining 8a share in each of the mouzas Sripore, Bagerkhola, and Rajumona chak, and excluding 3a 4g 2k 12t share, the remaining 12a. 15g. 3k 1kr. 8t share in all other mouzas will be sold	Kali Chandra Roy Chowdhury and others.	3,928 5 3		391 6 11½
2	3/1	Magura, Nuskerpore ..	8,304 3 11½		Excluding 10a share, 6a. share will be sold.	Bindu Bashini Debi and another.	3,122 7 2½		148 13 11½
3	4	Magura, Kadamtolla, and others	3,878 14 10	Whole	...	Radha Binod Mandal and others		199 14 4½	.
4	85	Magura, Amgachia	984 14 7		Excluding 7a in mouza chak Kantalia, the balance 9a., excluding 2a. 1g 2k share in each of the mouzas Patanpore and Nona the remaining 13a. 18g 2k, and the 16a share in the other mouzas will be sold	Haricharan Bose	861 11 10		374 11 8
5	106	Magura, Bagdaha	998 1 10½	Whole ...		Narendra Kumar Bannerjea and others	.	35 6 8½	
6	314	Muragacha, Harinarayan pur, and others	12,212 13 4½		Excluding 8a. 8g 0kg. 8t 2k 2kr. share the balance 7a 11g 9kg. 11t 1k 1kr. share will be sold	Trovlukho Nath Biswas and others	5,747 9 8		47 11 0½
7	315/11	Muragacha, Raghunath pur, and others.	10,220 6 7		Excluding 14a 17g 2k share, the remaining 1a 2g 2k. share will be sold	Apurba Kumari Dasi	721 3 0		139 5 11
8	985/9	Azimabad, Huda Rus khali, and others.	19,424 8 1½		Out of 38 mouzas, excepting mouza Kangramuri, and excluding 14a. 17g. 2k. share, the balance 1a. 2g. 2k share will be sold	Ditto	1,362 8 7½		142 12 5½

Alipore, the 1st September 1902.

MAHANANDA GUPTA, *for* Collector, 24-Parganas

Notification A.

NOTICE is hereby given under sections 6 and 13, Act XI of 1859, that the undermentioned estates and shares of estates in the district of Backergunge will be put up for sale at the office of the Collector of that district on the 26th September 1902 at 12 o'clock for arrears of revenue and other demands which by law are realisable as arrears of land revenue.

When in columns 5, 7 and 9 of the appended statement it is stated that only a share is to be sold, it is to be understood that a separate account is kept for that share.

Tauzi No.	Name of mahal and pargana.	Sadar jama of the whole estate.	Whether the whole estate is to be sold	If only a share is to be sold, specification of such share or shares.	Names of proprietors of property to be sold	If only a share is to be sold, the sadar jama of such share.	If the whole estate is to be sold the arrears due from it.	If only a share is to be sold, the arrears due from it
1	2	3	4	5	6	7	8	9
		Rs A. P.				Rs. A. P.	Rs. A. P.	Rs. A P.
1994	Taluq Biswa Nath Sen, of pargana Khanya Bahadurnager	570 6 11½	Whole estate	... ..	Ram Narain Sen and others.	.... .	142 6 9	.
2749	Taluq Durga Gangeswar of pargana Uttar Sahabazpur.	1,037 11 2½	...	Separate account No 1 for 8 annas' share.	Guru Prosanna Roy and others	518 13 8	.	54 6 5
4634	Char Sarikol of pargana Jazira	3,441 11 3	Whole estate.	.. .	Mr G. L Garth and Mr H L Weatheral trustees to the estate of Tojamboi Ali Choudhury and others.	...	2,841 11 3	...
4698	Char Jahapur of pargana Jazira.	5,000 0 0	Ditto	.....	Ditto ...	.. ..	300 0 0	.....
5235	Gar Makrari, howla No. 1, of Char Tabgi of pargana Dakshin Sahabazpur.	3 677 0 0	Whole howla.	.....	Basanta Kumar Guha ..	.. ..	460 0 0	...

Backergunge Collectorate, the 31st July 1902

D. WESTON, Collector.

Notification A.

NOTICE is hereby given, under sections 6 and 13, Act XI of 1859, that the undermentioned estates and shares of estates in the district of Gaya will be put up for sale at the office of the Collector of that district on the 25th September 1902 at 12 A.M. for arrears of revenue and other demands which by law are realisable as arrears of land revenue.

When in columns 6, 7, and 9 of the appended statement it is stated that only a share is to be sold, it is to be understood that a separate account is kept for that share, and that the other share or shares in the estate are excluded from the sale

Tauzi No.	Name of mahal and pargana.	Sadar jama of whole estate.	Whether the whole estate is to be sold.	If only a share is to be sold, specification of such share or shares.	Names of proprietors of property to be sold.	If only a share is to be sold, the sadar jama of such share.	If the whole estate is to be sold, the arrears due from it.	If only a share is to be sold, the share due from it.
1	2	3	4	5	6	7	8	9
1453	Deobaghora, pargana Charkawan.	Rs. A. P. 15,150 16 0	.....	The residuary ijmali share, exclusive of the separated share, consisting of— A. P. 1. Adri Kusa ... 16 0 2. Badop re 1 0 3 Charkupa ... 0 3 4. Budhua Dia 16 0 5. Dagari Chak 16 0 6. Tetaria Pawai Buzurg 16 0 7. Tawakal bigha 8 0 8. Aurawan ... 1 0	Jawahir Lal and others.	Rs. A. P. 603 14 0	Rs. A. P.	Rs. A. P. 2,851 4 7
4518	Guruа taluka, pargana Sherghatti.	15,997 14 0	Entire ...	..	Sheikh Moshheb Ali and others.	....	2,206 6 1	..
4571	Jaipore Dumrawan, pargana Sherghatti.	4,898 8 0	....	The residuary ijmali share, exclusive of the separated shares, consisting of— A. P. 1. Jaipore Dumrawan ... 8 0 2. Akhowri Khap ... 8 0 3. Pindra ... 8 0 4 Zarce Khap ... 8 0 5. Doudpore urf Pandowl ... 8 0 6. Deoghar Khap ... 4 0 7. Ibrahimpore ... 8 0 8. Horua ... 8 0 9. Jadoo Khap urf Jagdeo Khap ... 8 0 10. Ghorjara Kalan ... 8 0 11. Kolhua ... 8 0 12. Lokee Khap ... 8 0 13. Makhdumpore ... 8 0 14. Majhar ... 8 0 15. Mukhu Khap ... 8 0 16. Adham Khap ... 10 8 17. Siwsani Chak ... 8 0 18. Simri urf Tesari ... 8 0 19. Basar Khap ... 4 0	Mussamat Fakhrunnisa Begam *alias* Nanhi Begam and others.	1,221 12 0	..	933 0 2
4579	Ditto ...	4,898 8 0		Separate account No. I, consisting of the following shares:— A. P. 1. Jaipore Dumrawan ... 5 4 2. Allahdadpore urf Punowl ... 5 4 3. Akhowri Khap ... 5 4 4. Amba Dih ... 5 4 5. Pindra ... 5 4 6. Bagha Khap ... 5 4 7. Badar Khap ... 5 4 8. Baniun ... 5 4 9. Barsundh ... 5 4 10 Zarce Khap ... 5 4 11. Doudpore urf Pandowl ... 5 4 12. Dabri Chak ... 5 4 13. Deoghar Khap ... 5 4 14. Ibrahimpore ... 5 4 15. Hardia ... 5 4 16. Jadu Khap urf Jagdeo Khap 5 4 17. Ghorjara Kalan ... 5 4 18. Kolhua ... 5 4 19. Loki Khap ... 5 4 20. Makhdumpore ... 5 4 21. Manjhar ... 5 4 22. Naudiha ... 5 4 23. Adham Khap ... 5 4 24. Sugaris ... 5 4 25. Salempore ... 5 4 26. Sirsani Chak ... 5 4 27. Suhdeo Khap ... 5 4 28. Basir Khap ... 5 4	Khajeh Ubaidullah urf Nanhe Nawab and others.	1,170 10 0	. .	25 10 4
4687	Pankerdih Malihari taluka, pargana Sherghatti.	15 997 14 0	..	The residuary ijmali share, exclusive of the separated shares, consisting of— A. D. K. B. P. R. RF PH 1. Amnabad Hissa ... 3 5 15 6 14 0 3 0 2. Allnagar ... 1 12 17 6 11 0 0 0 3. Adampore ... 6 2 14 0 0 0 0 0 4. Bishunpore ... 0 1 17 19 19 2 0 0 5. Bura Dumri Bahargain ... ... 1 4 1 0 0 0 0 0 6. Bazid Chak ... 1 4 1 0 0 0 0 0 7. Bara Khar ... ... 3 5 15 6 14 0 0 0 8. Barah Kurwa ... 4 18 12 .0 0 0 0 0 9. Ballari ... ... 3 5 15 6 18 6 14 0 10. Binsek ... ... 3 13 19 15 0 0 0 0 11. Belwar ... ... 0 14 13 5 0 0 0 0 12. Bagdi-bar ... ... 4 0 10 0 0 0 0 0 13. Basaura Khurd ... 3 13 19 15 0 0 0 0 14 Balaspore ... ... 1 0 7 17 16 7 0 0 15. Bardih ... ... 1 0 17 1 10 10 0 0 16. Baha ... ... 1 14 14 15 4 10 0 0 17. Bagsauta ... ... 1 4 1 0 0 0 0 0 18. Bikopore ... ... 0 4 2 4 3 7 0 0 19. Bara Khurd ... 2 6 7 3 3 0 14 0 20. Belsara ... ... 3 5 15 6 14 0 0 0 21. Bhagra ... ... 2 8 9 16 2 10 0 0 22. Dhuar bar ... 0 10 17 16 4 7 10 0 23. Dhhakarbandha Birsj ... ... 0 15 4 0 0 0 0 0 24. Chainpore 4 13 8 0 0 0 0 0	Mussamat Ahmunnissa Bibi and others.	1,348 7 0		1,273 8 10

Tauzi No.	Name of mahal and pargana.	Sadar jama of whole estate.	Whether the whole estate is to be sold.	If only a share is to be sold, specification of such share or shares.	Names of proprietors of property to be sold.	If only a share is to be sold, the sadar jama of such share.	If the whole estate is to be sold, the arrears due from it.	If only a share is to be sold, the arrears due from it.
1	2	3	4	5	6	7	8	9
		Rs. A. P.		A. D. K. B. P. K. KN. PH 25. Dharhara ... ... 0 0 10 6 19 19 13 6½ 26. Dhanawan ... . 2 9 6 10 0 0 0 0 27. Dumrawan ... ... 7 1 14 14 3 14 0 0 28. Delho Kamalpore .. 2 13 17 14 9 10 0 0 29. Dhibra Sodi Chak 3 1 7 0 0 0 0 0 30. Dighasin ... . 2 9 1 10 0 0 0 0 31. Dubhal Kalan and Khurd ... ... 1 4 1 0 0 0 0 0 32. Deori Khas .. ... 1 18 6 10 0 0 0 0 33. Deoria ... ... 4 18 13 0 0 0 0 0 34. Guhl ... . 0 0 10 6 19 13 6 5 35. Guhi Doem ... ... 0 0 10 6 19 13 6 5 36. Guhi Seum ... ... 0 0 10 6 19 13 6 5 37. Ganati Mangarganth 1 4 1 0 0 0 0 0 38. Goidiha .. . 0 0 13 0 0 0 0 0 39. Hahranj Pathra ... 0 12 15 0 0 6 0 0 40. Jaspore ... ... 10 9 6 10 0 0 0 0 41. Jiwan Chak ... ... 4 9 16 6 13 6 14 0 42. Jagarnathpore ... 6 2 14 0 0 0 0 6 43. Jhaiha malu Chatti Imamganj ... 0 0 0 0 12 16 0 0 44. Jalwar .. ... 0 1 7 0 0 0 0 0 45. Jamuna ... 3 3 0 8 17 16 0 0 46. Karamdih .. ... 8 0 0 0 0 0 0 0 47. Kauchanpore .. 0 0 0 6 19 19 13 6 48. Karnan Chak Debi Das .. 4 2 4 3 4 0 0 0 49. Karasan Lodha ... 4 2 4 3 4 0 0 0 50. Kamat Chak ... 3 5 15 6 13 6 14 0 51. Khaira Pokhar Kushalpore ... 4 18 13 0 0 0 0 0 52. Kurma ... ... 3 17 13 0 0 0 0 0 53. Kothi Khas ... 0 4 2 4 3 7 0 0 54. Karungarh .. ... 1 14 14 13 12 16 14 0 55. Karhani .. ... 3 5 15 6 14 0 0 0 56. Kajar ... ... 1 4 1 0 0 0 0 0 57. Kolsand Paroria ... 6 2 14 0 0 0 0 0 58. Kundri .. ... 6 2 14 0 0 0 0 0 59. Kosla Kalan ... 4 18 13 0 0 0 0 0 60. Kathowtia . 0 12 0 10 0 0 0 0 61. Londa ... ... 4 0 6 3 4 0 0 0 62. Lawabar Sondih ... 5 2 16 13 12 16 14 0 63. Mahasingh Chak ... 0 0 10 6 19 13 6½ 0 64. Manjhowlia ... 1 4 1 0 0 0 0 0 65. Mircha Dadopore . 2 0 6 10 0 0 0 0 66. Maira ... ... 3 1 5 18 6 14 0 0 67. Monabar ... ... 1 4 1 0 0 0 0 0 68. Mahulan .. ... 4 18 13 0 4 2 0 0 69. Murarpore ... ... 2 11 19 2 19 10 0 0 70. Nowdiha . ... 4 18 13 0 0 0 0 0 71. Nonai Chak Motha 4 16 15 0 0 0 0 0 72. Nohta Paduma ... 0 0 0 0 19 0 0 0 73. Nohar ... ... 2 19 0 14 3 14 0 0 74. Pathra Badrohia ... 0 0 0 1 2 16 0 0 75. Pira Chak ... ... 0 0 10 6 19 13 6½ 0 76. Pandaria ... ... 0 1 17 19 19 19 2 0 77. Pandari ... ... 6 2 14 0 0 0 0 0 78. Panti ... . 0 14 13 5 0 0 0 0 79. Pipra Neyamat ... 4 18 13 0 0 . 0 0 80. Pakri Soha ... ... 0 9 17 6 10 0 0 0 81. Pakri ... ... 2 0 13 16 6 17 0 0 82. Powra Hissa ... 16 0 0 0 0 0 0 0 83. Raipore Pokhraha 3 8 10 0 0 0 0 0 84. Rabda ... ... 2 16 11 17 5 0 0 0 85. Rengania . ... 1 4 13 5 0 0 0 0 86. Shoram Chak ... 4 18 16 15 9 0 14 0 87. Sherghatti khas ... 1 4 1 0 0 0 0 0 88. Sugiaote ... ... 0 14 5 4 19 10 0 0 89. Salaiya ... ... 5 0 11 0 0 0 0 0 90. Sehna ... ... 0 18 16 18 12 10 0 0 91. Scoti ... ... 1 4 1 10 10 0 0 0 92. Sidpore ... ... 3 1 12 0 1 0 0 0 93. Salaiya ... ... 3 0 12 6 14 0 0 0 94. Salaiya urf Sildiha... 1 4 1 0 0 0 0 0 95. Tilaiya ... ... 1 2 9 18 16 5 0 0 96. Tikri Chak ... ... 3 5 15 6 13 6 14 0 97. Taradih ... ... 1 4 14 0 0 0 0 0 98. Tandwa ... ... 1 4 1 0 0 0 0 0 99. Itawan ... ... 0 14 4 8 5 19 13 14 100. Simri chak 1 2 15 4 7 0 0 0		Rs. A. P.	Rs. A. P	Rs. A. P.
6087	Khokhri Balayari Mahammadpore Mahammad Hasan Huftum, pargana Sonout.	1,098 11 0	.....	The residuary (small share, exclusive of the separated share, amounting to 12 annas 8 pies, will be sold.	Maulvi Sheikh Waizuddin Hasein and others.	878 15 0	.. ...	48 0 0
6340	Adopore, pargana Kabai.	1,198 0 0	Entire ...	....	Bhekha Sing and others.	.....	90 3 0	... .

Gaya Collectorate, the 1st September 1902.

A. MELLOR, *for* Collector.

Notification A.

NOTICE is hereby given, under sections 6 and 16, Act XI of 1859, that the undermentioned estates and shares of estates in the district of Midnapore will be put up for sale at the office of the Collector of that district on Friday, the 20th September 1902 for arrears of revenue and other demands which by law are realisable as arrears of land revenue.

When in columns 5, 7 and 9 of the appended statement it is stated that only a share is to be sold, it is to be understood that a separate account is kept for that share, and that the other share or shares in the estate are excluded from the sale

Tauzi No.	Name of mahal and pargana.	Sadar jama of whole estate.	Whether the whole estate is to be sold	If only a share is to be sold, specification of such share or shares.	Names of proprietors of property to be sold.	If only a share is to be sold, the sadar jama of such share.	If the whole estate is to be sold, the arrears due from it.	If only a share is to be sold, the arrears due from it.
1	2	3	4	5	6	7	8	9
154	Pargana Bajarpore, mahal Panchbajari	Rs. A. P. 650 10 8	Entire ...	.....	Sarat Chandra Jana and others	Rs. A. P.	Rs. A. P. 71 2 8	Rs. A. P. .....
276	Pargana Balisita, mahal Bhitarbinode	1,688 14 10	Do. ..		Maheswar Masanta and others.	.....	180 4 0	...
374	Pargana Bhaitgar Bahirimutha, mahal Bhagabanpore *alias* Bar Bhagabanpore	1,010 9 5	.....	S. A. I	Madhusudan Das	503 4 9	.....	37 12 0
588	Pargana Dakhinmal, mahal Haripore.	6,769 1 5	...	S. A. II	Haripriya Devi	3,384 5 9	.....	740 0 3
921	Pargana Kasijora, mahal Chakdaha *alias* Radhaballavpore.	9,185 8 0 with police	.....	Residuary share excluding S A. Nos. I, II, III, IV, V, VI.	Srimaty Niroda Moyi Dasi and others.	1,283 9 5	... ..	282 11 9
937	Pargana Kasijora, mahal Gar Purushothampore *alias* Chaitannapore.	738 10 6		Residuary share excluding S. A. Nos. I and II.	Ganga Narain Maity and others.	390 14 8	...	36 7 3
939	Pargana Kasijora, mahal Gazai.	2,467 8 3	Entire ...	.....	Srinarain Pal	....	270 0 0	... ..
944	Pargana Kasijora, mahal Gumukpota.	3,185 0 0 with police.	.....	S A. I	Mani Mohon Ray proprietor Jogendra Nath Pathak mortgagee.	1,592 8 0	.....	174 8 0
947	Pargana Kasijora, mahal Gogras Patsa	1,512 2 3 with police.	.....	Residuary share excluding S. A I.	Shaikh Sofiuddin and others	604 0 9	.....	55 3 0
948	Pargana Kasijora, mahal Gogras Keshabbar.	1,006 8 8	Entire ...	... ..	Srimotya Niroda Moyi Dasi and others.	.....	110 0 0	...
974	Pargana Kasijora, mahal Khandakhola	936 11 2	Do. ...	.....	Srimotya Kailashi Dasi and others.	.....	102 8 0	...
978	Pargana Kasijora, mahal Manahorpur *alias* Prasad Chak.	1,635 15 6	Do. ...	.....	Srimotya Niroda Moyi Dasi and others.	.....	178 8 0	... .
1007	Pargana Kasijora, mahal Purba Itra.	43,145 8 3 with police.	.....	Residuary share excluding S A Nos. 1, 3, 4, 5, 6, 7, 8, and 9.	Manik Lal Seal	13,109 5 7	. ....	75 7 6
1019	Pargana Kasijora, mahal Sadhuspota.	675 1 11	Entire ...	.....	Srimotya Tarangini Dassi ..		74 4 0	..
1030	Pargana Kasijora, mahal Uther Usatpore.	3,473 9 7	. ..	S. A 8	Nimai Chand De and others	640 0 0	. ...	70 0 0
1066	Pargana Kasijora, kismat mahal Palsa Uther.	2,039 1 2 with police.	...	Residuary share excluding S. A. 1, 2, 3, 4.	Amarnath Ghose and others	532 5 2	...	59 4 0
1346	Pargana Khatnagor, mahal Dewli.	1,069 5 9	Entire .	.....	Nimai Chand De	.....	117 14 3	...
1467	Pargana Khander, mahal Bansgeria *alias* Sahorda.	2,098 8 6	.....	Residuary share excluding S. A Nos. 4, 5, 6, 8, 9, 10, 11, 12, 13, 14, 15, 16.	Sibaprasad Bhakhat and others.	976 12 4	. ..	24 4 1
1730	Pargana Moynachore, mahal Anandapore.	5,057 4 9	.....	S. A 8	Sripati Charan De	1,795 3 8	.. ..	196 14 0
1731	Pargana Moynachore, mahal Ankhua Purba.	1,001 7 2	.....	Residuary share excluding S. A. I	Ganganarain Maity	560 11 7	...	53 4 6
1884	Pargana Majnamutha, mahal Nankar Bajapti	2,130 9 0	.....	Residuary share excluding S A Nos 1, 2, 4, 5, 6, 7.	Purna Chandra Mitra and others	746 13 2	..	163 5 1
1884	Ditto ditto ...	2,130 9 0		S A. I	Kritarthamoyi and others ...	703 12 5	... .	154 9 9
2246	Pargana Sabang, mahal Mahar	1,302 1 0	Entire ...	. ...	Syed Matanath Ali and others	.....	33 8 0	
2247	Ditto ditto	1,445 9 0	Do. ...	.....	Sarat Chandra Jana and others.	.....	156 9 0	... ..
2427	Pargana Sahapur, mahal Hasimpore.	1,014 2 10 with police.	Do. ...	...	Girish Chandra Jana and others.	.....	110 12 6	... .
				Temporary-settled Estates, Part II.				
2884	Pargana Pataspore, mahal Mangolpore.	2,401 0 0		Residuary share excluding S. A. No. 2.	Upendra Nandan Das Mohapatra.	2,016 2 6	.....	14 8 9

Midnapore Collectorate, Arrear Collection Department, the 16th August 1902. H. LUSON, Collector of Midnapore.

Notification.

NOTICE is hereby given, under sections 6 and 13, Act XI of 1859, that the undermentioned estates or shares of estates in the district of Dacca will be put up for sale at the Collector's office of that district on the 23rd September 1902 for arrears of revenue and other demands which by the Regulations and Acts in force are directed to be realised in the same manner as arrears of revenue.

When in columns 5, 7, and 9 of the appended statement it is stated that only a share is to be sold, a separate account is kept for such share and the other share or shares in the estate are excluded from the sale :—

Tauzi No.	Name of mahal and pargana.	Sadar jama of whole estate.	Whether the whole estate is to be sold.	If only a share is to be sold, specification of such share or shares.	Names of proprietors of property to be sold.	If only a share is to be sold, the sadar jama of such share.	If the whole estate is to be sold, the arrears due from it.	If only a share is to be sold, the arrears due from it.
1	2	3	4	5	6	7	8	9
6453	Pargana Khijirpur Gogchar Krokchar within char Bhedar	Rs. A. P. 858 0 0	16 annas ...	.. ..	Lalit Mohan Rai ...	Rs. A. P. .	Rs. A. P. 213 0 0	Rs. A. P.

Dacca Collectorate, the 13th August 1902. J. T. RANKIN, Collector of Dacca.

Notification A.

NOTICE is hereby given, under sections 6 and 18, Act XI of 1859, that the undermentioned estates and shares of estates in the district of Saran will be put up for sale at the office of the Collector of that district on the 22nd September 1902 at 11 A.M. for arrears of revenue and other demands which by law are realisable as arrears of land revenue.

When in columns 5, 7 and 9 of the appended statement it is stated that only a share is to be sold, it is to be understood that a separate account is kept for that share.

Tauzi No.	Name of mahal and pargana.	Sadar jama of whole estate.	Whether the whole estate is to be sold.	If only a share is to be sold, specification of such share or shares.	Names of proprietors of property to be sold.	If only a share is to be sold, the sadar jama of such share.	If the whole estate is to be sold, the arrears due from it.	If only a share is to be sold, the arrears due from it.
1	2	3	4	5	6	7	8	9
				Part I.		Rs. A. P.	Rs. A. P.	Rs. A. P.
78	Deopoor, pargana Bal	3,309 12 10	Entire ...	Nil	Babu Gulab Chand ...	.....	320 0 3	.....
394	Benut, pargana Bal ...	883 15 8	... .	As. Ijmali— Benut ... ... 8 Masihantola ... ... 12 Rampoor ... ... 16 Birtimihdar Bhadaur ... ... 16 All other shares besides that specified will be excluded from sale.	Harihar Pd. and others	650 2 8	.....	2 15 3
2074	Batordeh, pargana Dangsi.	1,425 0 0	.....	As. P. Ijmali— Bhagar Jallaur ... ... 8 0 Biraicha ... ... 2 0 Bhadeya ... ... 5 4 Kotwa ... ... 8 0 Bhadkulan ... ... 6 8 Panditpura ... ... 8 0 Dangsi ... ... 2 0 Bochea ... ... 8 0 Batardeh ... ... 2 8 Pipra ... ... 1 4 Bhagwar ... ... 6 8 Sorahia ... ... 2 0 Parsowna ... ... 8 0 Parsa ... ... 8 0 All other shares besides that specified will be excluded from sale.	Sarjoo Pd. Narain Singh, Siri Pd. Narain Singh and others.	661 3 7	.....	54 4 4
				Part II.				
2080	Deara Baghwar or Baghwar Deara, pargana Dangsi.	626 0 0	Entire ...	.....	Babu Sheopertap Sahai and others.	.....	0 7 0	.....
				Part I.				
3492	Kerwakatsa, pargana Goa.	3,124 6 8	.. .	A. P. K. M. D. K. B. T. Ijmali— Kerwa ... ... 0 8 7 2 10 0 0 0 Parsa ... ... 0 7 3 10 0 0 0 0 Bajrahia ... 0 9 4 10 0 0 0 0 Katsakesopoor 8 8 0 0 0 0 0 0 Kumhaila ... 9 9 3 15 0 0 0 0 Rampooratowli 12 6 0 0 0 0 0 0 Pearapoor ... 10 1 17 10 0 0 0 0 Siswa ... ... 6 0 7 10 0 0 0 0 Sarayabasant ... 9 4 10 0 0 0 0 0 Saroyarathnagar 10 2 17 10 0 0 0 0 Faridpur ... 4 8 5 0 0 0 0 0 Fatehpur ... 8 10 5 0 0 0 0 0 Ardewa ... ... 12 6 0 0 0 0 0 0 Akolhi ... ... 8 10 5 0 0 0 0 0 Usri ... ... 8 5 11 5 0 0 0 0 Galibpur ... 10 1 17 10 0 0 0 0 Chowrasi ... 8 10 5 0 0 0 0 0 Agahra ... ... 10 11 5 0 0 0 0 0 Achitpur ... 9 7 0 9 12 13 2 10 Ghurna ... 12 6 0 0 0 0 0 0 Chhapramaheh 8 10 5 0 0 0 0 0 Downgodhua ... 8 10 5 0 0 0 0 0 All other shares besides that specified will be excluded from sale.	Isar Sahai and others ...	1,834 1 2	.....	113 6 2
3612	Mithepoor pargana ...	747 11 8	.....	A. P. K. Ijmali— Repura ... ... 9 0 0 Mithepoor ... ... 10 9 10 Sirua *alias* Parsa ... ... 11 5 18 Bhualpoor ... ... 13 3 0 All other shares besides that specified will be excluded from sale.	Musamat Jagpati Kuar and others.	525 11 10	.....	13 5 7
3474/1	Gamhari, pargana Madhal.	4,218 13 0	.....	As. Separate account No. 1— Gamhari Mathia ... ... 2 Hamidpur ... ... 2 Sauwalia ... ... 2 Kamalmarwa ... ... 2 Sitalpur paraya ... ... 2 Ghasigarora ... ... 2 Rawteh ... ... 2 Banskali ... ... 2 Khaira Azam ... ... 2 Dewkuti ... ... 2 Hakam ... ... 2 Sisai ... ... 2 Saflabad ... ... 2 Mangroochapra 2	Chitrkut Nath, Badri Nath and Rameshar Nath and others.	527 5 8	.....	0 11 1

Touzi No.	Name of mahal and pargana.	Sadar jama of whole estate.	Whether the whole estate is to be sold.	If only a share is to be sold, specification of such share or shares.	Names of proprietors of property to be sold.	If only a share is to be sold, the sadar jama of such share.	If the whole estate is to be sold, the arrears due from it.	If only a share is to be sold, the arrears due from it.
1	2	3	4	5	6	7	8	9
				Separate account No. 1—*concld.* As. Rahra ... ... 2 Rahuatal ... ... 2 Gaura ... ... 2 Gauri ... ... 2 Sankarpoora ... ... 2 Fakharpoora ... ... 2 Ramgadh ... ... 2 Bamoo ... ... 2 All other shares besides that specified will be excluded from sale.		Rs. A. P.	Rs. A. P.	Rs. A. P.
4597/9	Sheodiari, pargana Manjhi.	13,840 15 6	... .	Separate account No. 9— A. Sheodiari ... ... 1 All other shares besides that specified will be excluded from sale.	Babu Lal Singh, through Musamat Pachrattan Kuar.	865 1 0	.....	216 4 6
4597/10	Ditto .	13,840 15 6	....	Separate account No. 10— P. K. Sheodiari ... ... 9 12 All other shares besides that specified will be excluded from sale.	Bhirgunath Singh and others.	692 0 9	.....	139 11 6

Saran Collectorate, the 18th August 1902.

P. G. ROGERS, *for* Collector.

Advertisement of Sale.

NOTICE is hereby given that the proprietary right of Government, as specified in the conditions of sale below, to the undermentioned estate, situate in the district of Khulna, will be put up to sale at the Khulna Collectorate on the 29th September 1902, corresponding to 13th Aswin 1309 B.S.

The purchasers will be subject to the following conditions of sale:—

Conditions of Sale.

1st.—The estate to be sold to the highest bidder above the upset price, which will be fixed by the Collector at the time of sale. The purchaser of this estate will be considered as the proprietor of the estate, and the entire proprietary right of Government in such estate will be transferred to him subject to the revenue fixed in perpetuity.

2nd.—The sale to be subject to existing leases and to the rights conferred by the settlement proceedings and by the laws in force, and purchasers to be bound to respect the rights of resident cultivators who have signed the schedule of assessment prepared by the revenue authorities.

3rd.—If the amount of purchase-money do not exceed Rs. 100, the whole amount to be paid down at once.

4th.—If the amount of purchase-money exceed Rs. 100, one-fourth of the amount of bid to be immediately deposited. If the balance be not paid by noon of the fifteenth day after the sale, reckoning the day of sale as one, or if that day be a close holiday, then by noon of the first succeeding office day, the sale is to be cancelled (the sum deposited being forfeited to Government), and the estate to be again put up to sale at the risk of the defaulting purchaser, after issue of advertisement, as in the case of original sale—

Number on the district roll.	Name of estate and pargana.	Approximate area—		Government revenue assessed.	Remarks.
		In bighas.	In acres.		
1	2	3		4	5
944	Haridaskati, pargana Malui	B. K. CH. 1 13 0	A. R. P. 0 2 18	Rs. A. 1 2	

Collector's Office, Khulna, the 18th August 1902.

S. C. MUKERJEE, Collector.

Notification B.

NOTICE is hereby given, under sections 5 and 13, Act XI of 1859, that unless the arrears mentioned below are paid on or before the next latest date of payment, viz. the 29th September 1902, the undermentioned estates or shares of estates in the district of Midnapore will be put up for sale at the office of the Collector of that district on the 18th October 1902 at 12 A.M. for the said arrears.

When in columns 5, 7 and 9 of the appended statement it is stated that only a share is to be sold, it is to be understood that a separate account is kept for that share, and that the other share or shares in the estate are excluded from the sale.

Tauzi No.	Name of mahal and pargana.	Sadar jama of the whole estate.	Whether the whole estate is to be sold.	If only a share is to be sold, specification of such share or shares.	Names of proprietors of property to be sold.	If only a share is to be sold, the sadar jama of such share.	If the whole estate is to be sold, the arrears due from it.	If only a share is to be sold, the arrears due from it.	Nature and amount of demand for which to be sold.
1	2	3	4	5	6	7	8	9	10
2716	Pargana Jalamuta, mahal Jalamuta.	Rs. A. P. 1,26,748 8 10	Entire	.....	Srimati Hariprya Debi.	Rs. A. P.	Rs. A. P. 27,727 3 6	Rs. A. P.	Arrears for Jan. 1902, Rs. 27,727-3-6.

Midnapore Collectorate, the 2nd September 1902. H. LUSON, Collector of Midnapore.

Notification A.

NOTICE is hereby given, under sections 6 and 13, Act XI of 1859, that the undermentioned estates and shares of estates in the district of Tippera will be put up for sale at the office of the Collector of that district on the 26th September 1902 at 12 o'clock for arrears of revenue and other demands which by law are realisable as arrears of land revenue.

When in columns 5, 7 and 9 of the appended statement it is stated that only a share is to be sold, it is to be understood that a separate account is kept for that share.

Tauzi No.	Name of mahal and pargana.	Sadar jama of whole estate.	Whether the whole estate is to be sold.	If only a share is to be sold, specification of such share or shares.	Names of proprietors of property to be sold.	If only a share is to be sold, the sadar jama of such share.	If the whole estate is to be sold, the arrears due from it.	If only a share is to be sold, the arrears due from it.
1	2	3	4	5	6	7	8	9
385	Taluq Sribatsha Das, pargana Gunanundi.	Rs. A. P. 1,238 11 7	Whole ...	.....	Srimati Monyakhoya Chowdhurani, manager on behalf of minor Harendra Chandra *alias* Har Kumar Pal Chowdhury and others.	Rs. A. P.	Rs. A. P. 18 12 2	Rs. A. P. .....
430	Gazipur Monipur Chur No. 26 71, pargana Maizardi	1,238 1 0	Do. ...	.....	Kashi Chandra Pal Chowdhury and others.	.....	84 14 4	.....
1935	Char near Nogarerkandi No. 211, pargana Utter-shahapur.	1,296 10 9	Do. ...	.....	Ishan Chandra Dutt and others.		202 9 4	.....
1983	Pargana Bardakhat Doulatpurjoar: the term is from 1261 to 1310 B.S.	1,379 3 10	Do. ...	.....	Bepra Charan Ghosh and others.	.....	173 1 0	.....
2295	Shonapur Tajpur, pargana Zeaira.	670 10 0	Do. ...	.....	Tojammal Ali Chowdhury and others.	.....	200 0 0	.....

Tippera Collectorate, the 26th July 1902. H. W. SCROOPE, Collector.

Notice of Lease of Waste Lands in the Sundarbans, under Rule 19, Section 11 of the Waste Lands Manual, 1898.

NOTICE is hereby given that the lease of the land specified in the schedule hereto annexed, and of which the plan is open to inspection at the office of the Commissioner of the Sundarbans, has been applied for by Shomsher Khan Chowdhury, and will be sold at 12 o'clock noon on the 8th of December 1902, Monday, at the Sundarbans Commissioner's office at Alipur, unless meantime the sale is stopped or postponed in consequence of claims or objection under Act XXIII of 1863 (to provide for the adjudication of claims to waste lands), or owing to any other cause.

2. The lease of the land will be granted subject to the conditions which are specified below, as well as to the general terms annexed to the Rules for the Sale of Leases of Waste Lands in the Sundarbans of the 24-Parganas, Khulna, and Backergunge, dated 12th November 1879.

Conditions.

That the land shall be subject to all existing rights of way and water and other easements.

That the right of using all streams and channels in any way navigable shall be reserved to the public, as also the use of a tow-path not less than 25 feet in width on each side of every such stream and channel.

That no charge will be made for wood and timber standing on the land at the time it is leased, nor for any wood which may be cut and burnt to effect clearances, or which may be used on the land; but for wood and timber exported for sale a duty shall be levied at such rate and in such manner as may, from time to time, be prescribed by Government.

That the Government reserves to itself the right to all minerals on the land, together with such rights of way and other reasonable facilities as may be requisite for working, getting, and carrying away such minerals. It also

retains its proprietary right in the land, and only confers on the lessee an occupancy right, which shall be hereditary and transferable.

Schedule.

Number of lot.	District, subdivision, and thana.	Area.	Boundaries.
Lot No. 162, second portion.	24-Parganas, Basirhat, Hossainabad.	Bighas. 6,097	*North.*—By a portion of the Gumti khal, which falls into the Kalindi river. *East.*—By a portion of the Kalindi river. *South.*—By a line bearing 241° drawn from a point on the west bank of the Kalindi river up to a point on the east bank of the Sogunkhali khal, which falls into the Raimongal river, and by a portion of the said Sogunkhali khal up to its junction with the Chingradhopa or Koriar khal. *West.*—By a portion of the Chingradhopa or Koriar khal and by a line bearing 26° drawn from a point on the north bank of the Chingradhopa or Koriar khal to a point on the south bank of the Gumti khal. All the above boundaries are as shown in Sundarbans Commissioner Mr. Sunder's map of season 1901-1902.

Alipur, the 5th September 1902. D. SUNDER, Commissioner in the Sundarbans, Bengal.

Notice of Lease of Waste Lands in the Sundarbans, under Rule 19, Section 11 of the Waste Lands Manual, 1898.

NOTICE is hereby given that the lease of the land specified in the schedule hereto annexed, and of which the plan is open to inspection at the office of the Commissioner of the Sundarbans, has been applied for by Kali Krishna Adock, and will be sold at 12 o'clock noon on the 8th of December 1902, Monday, at the Sundarbans Commissioner's office at Alipur, unless meantime the sale is stopped or postponed in consequence of claims or objection under Act XXIII of 1863 (to provide for the adjudication of claims to waste lands), or owing to any other cause.

2. The lease of the land will be granted subject to the conditions which are specified below, as well as to the general terms annexed to the Rules for the Sale of Leases of Waste Lands in the Sundarbans of the 24-Parganas, Khulna, and Backergunge, dated 12th November 1879.

Conditions.

That the land shall be subject to all existing rights of way and water and other easements.

That the right of using all streams and channels in any way navigable shall be reserved to the public, as also the use of a tow-path not less than 25 feet in width, on each side of every such stream and channel.

That no charge will be made for wood and timber standing on the land at the time it is leased, nor for any wood which may be cut and burnt to effect clearances, or which may be used on the land; but for wood and timber exported for sale a duty shall be levied at such rate and in such manner as may, from time to time, be prescribed by Government.

That the Government reserves to itself the right to all minerals on the land, together with such rights of way and other reasonable facilities as may be requisite for working, getting, and carrying away such minerals. It also retains its proprietary right in the land, and only confers on the lessee an occupancy right, which shall be hereditary and transferable.

Schedule.

Number of lot.	District, subdivision, and thana	Area.	Boundaries.
G Plot, fifth portion.	24-Parganas, Diamond Harbour, Mathurapur.	Bighas 5,8.6	*North.*—By a portion of the Kankramari khal, which falls into the Subtermukhi river, and by a line bearing 90° drawn from the east bank of the Kankramari khal to a point on the west bank of the Jagadal river. *East.*—By a portion of the Jagadal river. *South.*—By a line bearing 270° drawn from a point on the west bank of the Jagadal river to a point on the east bank of the Subtermukhi river. *West.*—By a portion of the Subtermukhi river. These boundaries are given from late Sundarbans Commissioner Mr. Ross' map of season 1899-1900.

Alipur, the 5th September 1902. D. SUNDER, Commissioner in the Sundarbans, Bengal

Notice of Lease of Waste Lands in the Sundarbans, under Rule 19, Section 11 of the Waste Lands Manual, 1898.

NOTICE is hereby given that the lease of the land specified in the schedule hereto annexed, and of which the plan is open to inspection at the office of the Commissioner of the Sundarbans, has been applied for by Gobordhon Adock, and will be sold at 12 o'clock noon on the 8th of December 1902, Monday, at the Sundarbans Commissioner's office at Alipur, unless meantime the sale is stopped or postponed in consequence of claims or objection under Act XXIII of 1863 (to provide for the adjudication of claims to waste lands), or owing to any other cause.

2. The lease of the land will be granted subject to the conditions which are specified below, as well as to the general terms annexed to the Rules for the Sale of Leases of Waste Lands in the Sundarbans of the 24-Parganas, Khulna, and Backergunge, dated 12th November 1879.

Conditions.

That the land shall be subject to all existing rights of way and water and other easements.

That the right of using all streams and channels in any way navigable shall be reserved to the public, as also the use of a tow-path not less less than 25 feet in width on each side of every such stream and channel.

That no charge will be made for wood and timber standing on the land at the time it is leased, nor for any wood which may be cut and burnt to effect clearances, or which may be used on the land; but for wood and timber exported for sale a duty shall be levied at such rate and in such manner as may, from time to time, be prescribed by Government.

That the Government reserves to itself the right to all minerals on the land, together with such rights of way and other reasonable facilities as may be requisite for working, getting, and carrying away such minerals. It also retains its proprietary right in the land, and only confers on the lessee an occupancy right, which shall be hereditary and transferable.

Schedule.

Number of lot.	District, sub-division, and thana.	Area.	Boundaries.
Lot No. 163, eighth portion.	24-Pargana, Basirhat, s Hosseinabad.	Bighas 3,793	*North.*—By the Mittakhali khal, which falls into the Raimongal river, and by a line bearing 96° drawn from a point on the east bank of the Mittakhali khal to a point on the west bank of the Nonabhuinya khal. *East.*—By a portion of the Nonabhuinya khal. *South.*—By a portion of the Raimongal river. *West*—By a portion of the Raimongal river All the above boundaries are as shown in Sundarbans Commissioner Mr. Sunder's map of season 1901-1902.

Alipur, the 5th September 1902. D. SUNDER, Commissioner in the Sundarbans, Bengal.

Notification B.

NOTICE is hereby given, under sections 5 and 13, Act XI of 1859, that unless the arrears mentioned below are paid on or before the next latest date of payment, viz, the 8th day of November 1902, the undermentioned estates or shares of estates in the district of Cuttack will be put up for sale at the office of the Collector of that district on the 2nd day of December 1902 at for the said arrears:—

Tauzi No.	Name of mahal and pargana.	Sadar jama of whole estate.	Whether the whole estate is to be sold.	If only a share is to be sold, specification of such share or shares.	Names of proprietors of property to be sold.	If only a share is to be sold, the sadar jama of such share.	If the whole estate is to be sold, the arrears due from it.	If only a share is to be sold, the arrears due from it.	Nature and amount of demand for which to be sold.
1	2	3	4	5	6	7	8	9	10
645	Ma Narda, pargana Karualkhand.	Rs. A. P. 316 0 0	Whole ...	.....	Choudhury Bhola Nath Misra and others.		Rs. A. P. 1 0 0	..	Previous arrear.

Cuttack, the 9th September 1902. W. F. C. MONTRIOU, Deputy Collector in charge.

Statement of the Affairs of the Bank of Bengal for the week ending 9th September 1902.

LIABILITIES.	Rs.	A.	P.	ASSETS.	Rs.	A.	P.
Capital paid up	2,00,00,000	0	0	Government Securities	1,51,90,742	0	0
Reserve Fund	1,14,00,000	0	0	Other authorised investments	67,83,185	0	0
Public Deposits at Head Office Rs. 81,96,617 7 3				Loans on Government and other authorised securities	2,17,36,416	8	9
Ditto ditto at Branches „ 1,39,65,276 12 3	2,21,61,894	3	6	Accounts of Credit on ditto ditto	1,53,88,488	0	0
Other Deposits at Head Office and Branches	7,98,12,905	11	2	Bills discounted and purchased	2,10,06,505	7	1
Bank Post Bills, &c.	3,42,187	13	6	Balances with other Banks	20,68,910	14	3
Sundries	14,63,843	3	3	Bullion	20,022	11	4
				Dead Stock	16,13,858	7	0
				Stamps	11,879	7	6
				Sundries	8,10,793	14	0
					8,46,30,803	7	9
				Cash and Currency Notes at Head Office* Rs. 2,02,11,888 10 7			
				Cash and Currency Notes at Branches† „ 2,98,37,238 13 1	5,00,49,127	7	8
Rupees	13,46,79,930	15	5	Rupees	13,46,79,930	15	5

* Includes Sovs. & ½ Sovs., value Rs. 1,43,415 0 0
† Do. do. do. „ 1,25,220 0 0
Rs. 2,68,635 0 0

E. J. BIRCH,
Chief Accountant.

By order of the Directors,
W. D. CRUICKSHANK,
Secretary and Treasurer.

Rate for Demand Loans, 3 per cent.
Percentage 48·45.

BANK OF BENGAL,
Calcutta, the 11th September 1902.

(630—1)

NOTIFICATION.

In the Court of the Subordinate Judge, Monghyr.

TITLE EXECUTION CASE No. 175 OF 1902.

Babu Baijnath Goinka, decree-holder, *versus* Shaikh Walayut Hussain and others, judgment-debtors.

TO be sold in the above case by the Nazir of this Court at 12 o'clock on the 22nd September 1902, right, title and interest of the judgment-debtors in the following properties:—

Serial No.	Description of properties.	Tauzi No.	Jama sadar.	Approximate value stated by the decree-holder.
1	Three annas 12½ dams pokhta share of Shaikh Rahim Buksh, Shaikh Ezid Buksh and Shaikh Moula Buksh, which have been purchased by the judgment-debtors Babu Radhey Singh, Madho Singh and Chhaturdhari Singh, out of 14½ annas pokhta share, after deducting 10 annas 17½ dams share of Shaikh Umaid Ally, Shaikh Abdul Wahab and Shaikh Mohamad Husain, Shaikh Abdur Rahim and Hari Keshun Bhagat, being the makarary right of the judgment-debtors in the village called Markawan, asli and dakhli, pargana Bisthazari, thana Sikandra, subdivision Jamui.	336	Rs. a. 539 5	Rs. 700

Monghyr, the 9th September 1903. (638—1) GOPAL CHUNDER BANERJEE, Offg. Sub-Judge.

Notice of Deaths sent to the Administrator-General of Bengal under section 64 of Act II of 1874.

Name of deceased.	Place of death.	Date of death.	By whom death reported, and when.	REMARKS
Mr. Robert Morrison, late a Foreman Erector.	Lahore	24th Aug. 1902	District Judge of Lahore, on 5th September 1902.	Will left. No application.
Mr. John Murphy, late of No. 22, Bedford Lane.	Presidency General Hospital.	28th „ „	District Judge of 24-Parganas, Alipore, on 3rd September 1902.	Not known whether the deceased has left any Will or not. No application
Mr. Albert V. Joseph, late of No. 16, Gangadhur Babee's Lane.	Ditto	14th „ „	District Judge of 24-Parganas, Alipore, on 23rd August 1902.	Ditto. Ditto.
Mr George Wales late of No. 36, Gorachand Road, Ballly	Ditto	19th „ „	Ditto. ditto	Ditto Ditto.

Calcutta, the 16th September 1902 HENRY T. HYDE, Administrator-General of Bengal.

Pure Sulphate of Quinine.

MANUFACTURED AT THE BENGAL GOVERNMENT CINCHONA PLANTATION.

FROM 1st April 1902 the price of this quinine will be as follows:—

1 Pound tin Rs. 17, or, post free, Rs. 17-8
½ „ „ „ 8-8 „ „ „ „ 8-14.
¼ „ „ „ 4-4 „ „ „ „ 4-10.

Analysis shows this quinine to be of the purest manufacture; and it is guaranteed to be free from wilful mixture with the inferior alkaloids, cinchonine and cinchonidine. It is for sale only to Government officers, and only for cash, and may be had from the Superintendent, Botanic Garden, Sibpur, near Calcutta.

Cinchona Febrifuge.

Cinchona Febrifuge can be purchased by all Government officers and by any one taking *six pounds* and upwards at a time from the Superintendent, Botanic Garden, Calcutta, for cash only at the following rates—

	Government officers.	General public.	Postage extra.
	Rs. A.	Rs.	As.
1 Pound tin ...	10 0	12	8
½ „ „ ...	5 0	6	6
¼ „ „ ...	2 8	3	4

BABU NAGENDRA NATH MITRA, B.A., B.L., intends to enrol himself as a Vakil of the High Court, Bengal.

(546—4—101)

BEJAY KUMAR BHATTACHARJEE intends to be enrolled as a Vakeel, High Court.

(621—1086—4)

MR. ARTHUR JAMES DENT has been admitted a partner in our firm from 1st July last.

GLADSTONE, WYLLIE & Co.

Calcutta, the 15th September 1902. (639—3—1165)

Wanted

BY the Muzaffarpur District Board a Supervisor on a salary of Rs. 150 rising to Rs. 200 per month. Applicants must be qualified as prescribed in Rule 7, Part IX of the Bengal Local Self-Government Act.

Copies of testimonials will be received by the undersigned up to noon of the 1st October 1902.

G. W. DISNEY, A.M.I.C.E.,
District Engineer, Muzaffarpur.

The 8th September 1902. (634—3)

Wanted

FOR the Midnapore District Board two Inspectors on salaries of Rs. 60 rising to Rs. 80 by annual increments of Rs 2 each for the inspection and administration of the Board's pounds and ferries throughout the district. The Inspectors will be required to be away from head-quarters at a greater distance than five miles for 25 days in the month. They will be allowed travelling allowance whilst so away at the rate of one rupee a day up to Rs. 25 a month.

Candidates must produce certificates of their honesty and capacity (including educational qualifications) and of their age. They must also furnish a list of their relatives in the service of Government, if any. Ability to ride is indispensable.

Applications will be received by the Vice-Chairman up to the 30th September 1902.

H. LUSON, Chairman.

(637—2)

Notice.

WANTED temporarily from November next—
1 Native Surveyor at Rs. 50 per month.
3 Native Surveyors at Rs. 40 each per month.
8 Amins at Rs. 35 each per month.
12 Amins at Rs. 20 each per month.

Applications will be received by the undersigned up to 21st October 1902.

JYOTISH CHANDRA SEN,
Deputy Collector in charge,
for Deputy Commissioner.

Jalpaiguri, the 4th September 1902.

Notice.

WANTED a Sub-Overseer under the District Board of Hazaribagh on a monthly salary of Rs. 50 *plus* fixed monthly horse allowance of Rs. 15. None need apply who is not qualified under Rule 7 (2) of the Rules published in Bengal Government Notification No. 3834L S.-G., dated 20th December 1901.

The applications will be received by the Chairman, District Board, up to 21st September 1902.

SYED KARAM HOSSAIN,
Vice-Chairman, District Board, Hazaribagh.

Hazaribagh, the 6th September 1902. (623—2)

Notice.

WANTED 12 Bengali-knowing Inspectors for the Sonthal Parganas Settlement.

Applicants must either have served in the Survey of India Department, or have certificates of their acquaintance with Offset Cadastral Survey work. Applicants should state their age and send their applications with copies of testimonials to the undersigned not later than 25th September.

H. MCPHERSON,
Settlement Officer, Sonthal Parganas.

Dumka, the 2nd September 1902,

Notice.

WANTED 12 Bengali-knowing Inspectors on a monthly salary of Rs. 30 each and 80 Bengali-knowing Amins on a monthly salary of Rs. 25 each for Survey and Settlement work in the Sundarbans during the ensuing cold weather. Applicants must be good Plane-table Surveyors, and should also be able to prepare the necessary measurement papers.

Wanted also 8 Clerks on Rs. 30 each, 8 Mu arrirs on Rs. 25 each, and 8 Muharrirs on Rs. 20 each per mensem for Settlement work between November 1902 and March 1903. The Clerks and Muharrirs will be granted travelling allowance at the rates sanctioned in the Civil Service Regulations.

Applications, with copies of testimonials, will be received by the undersigned up to the 25th October 1902.

D. SUNDER, Commissioner, Sunderbans.

Sunderbans Commissioner's Office, Alipur, the 10th September 1902

Board of Examiners.

THERE is a vacancy for a *Hindi Pandit* in the office of the Board of Examiners to act for six months for the permanent incumbent proceeding on sick leave on the 1st October 1902. Acting allowance Rs. 20 per mensem. The mother-tongue of the applicant must be Hindi; he should also possess a fair knowledge of English. Applications in English and Hindi in the applicant's own handwriting with testimonials should reach the undersigned on or before the 30th September 1902.

GEORGE RANKI, C.I.E., M.D., LT.-COL., I.M.S.,
Secretary, Board of Examiners.

Calcutta, the 11th September 1902.

Notice.

UNDER the provisions of Rule XX, Part I of the Rules for the Care and Use of Government Cemeteries, the following Monuments, having become ruinous, will be treated at the next repairs in such manner as the Officer in charge of the Cemetery may decide to be necessary for the maintenance of the Cemetery in decent order, unless any person will undertake to bear the cost of repairs:—

OLD CEMETERY, BARRACKPORE.

Catherine Macvitie	... ...	1827
Sergt.-Major C. Finch	... ...	1815
Jane Vyall	... ...	1819
Lieut. T. Macan	... ...	1809
George Manley	... ...	1809
Ensign George Downie Cullen	...	1823
Capt. Birkett	... ...	1846
Norman Macleod	... ...	1824
William McCluskie	... ...	1824
Henry William Maylark	... ...	1860
Major James Grant	... ...	1859
Sergt.-Major John Henry Luncus	...	1839
Lieut.-Col. William Lally	... ...	1805
Elizabeth Frazer	... ...	1799
Mary Ann Farrel	... ...	1840
Harriot White	... ...	1816
Thomas Green White	... ...	1793
Emily Burrett	... ...	1842
Samuel Twemlow	... ...	1825
Lieut. E. C. Macpherson	... ...	1832
Lieut.-Col Clayton	... ...	1804
Sergt.-Major T. Holland	... ...	1856
Sarah Holland	... ...	1850
Capt T Haslam	... ...	No date.
Robert Westfield	... ...	1865
Martin Goulder	... ...	1851
Isabella Goulder	... ...	1851
George Blundell	... ...	1839
Richard Bailey	... ...	1843
Elizabeth Bailey	... ...	1845
Richard Bailey	.. ...	1839
Walter Pelham Burn	... ...	1854
Col. Charles Coventry	... ...	1854
James Lyle Alkeo	... ...	No date.
Alice Jane Seymour	... ...	1856
Constance Ellinor Lance	... ...	1858
Charlotte Caroline Baker	... ...	1856
Maria Eliza Marshall	... ...	1860
James Athill Turner	... ...	1843
Sarah McCullum	... ...	1862
Susan Douglas Everard	... ...	1862
Theodora Elizabeth White	... ...	1866
Lieut. John Watson	... ...	1860
Charles Andrew McMullin	... ...	1862
Charles Sharp	... ...	1860
Mary James	... ...	1860
Capt. W. C. L. Ryves	... ...	1860
Lieut. Powell	... ...	1859
Major W Sperling	... ...	1859
Capt. Philip Rubie	... ...	1860
Lieut. A H. Carter	... ...	No date.
Richard Clerke	... ...	1847
Fanny Sophia Prior	... ...	1847
Charlotte Mary Coley	... ...	1859
Mary Bertha Coley	... ...	1858

C. H. BARLOW, Chaplain.

Barrackpore, the 8th September 1902.

Notice.

SEALED TENDERS for the conveyance of import, export and other Government stores, and for labour and the hire of boats for two periods—one of 1 year 3 months, from 1st January 1903 to 31st March 1904, and one for 3 years 3 months, from 1st January 1903 to 31st March 1906—will be received by the Agent for Government Consignments, Calcutta, up to noon on Friday, the 3rd October 1902.

Tenders should be superscribed "Tender for carrying contract for one year and three months" and "three years and three months," as the case may be.

Tenders must be prepared on forms to be obtained with full particulars from the undersigned on payment of one rupee for each form.

No tender will be received except on the prescribed form, and no additions or alterations must be made on the tender form.

Tenders must be supported by a Bank of Bengal or Treasury receipt for Rs. 700 as earnest-money. The earnest-money to be forfeited in the event of a tender withdrawn No tender will be received without a deposit of this earnest-money.

Tenders will be opened at noon on Friday, October 3rd, 1902, at No. 5 Strand Road, in the presence of tenderers by the undersigned, who does not bind himself to accept the lowest or any tender.

H. J. PATERSON, LIEUT., R.N.R.,
Offg. Agent for Govt. Consignments.

Calcutta, the 25th July 1902.

NOTICE IS HEREBY GIVEN that we, AIMÉE MONA COOPER (lately called and known by the name of AIMÉE MONA COOPER SUNDER), HERBERT JOHNSTONE COOPER (lately called and known by the name of HERBERT JOHNSTONE COOPER SUNDER), and DUNCAN GORDON COOPER (lately called and known by the name of DUNCAN GORDON COOPER SUNDER), all of the City of Calcutta, in the Empire of India, have dropped the surname of "SUNDER"; and that we respectively now do, and shall at all times hereafter, in all deeds and writings, and in all dealings, and for all purposes, on all occasions whatsoever, drop and omit the name of "SUNDER," and use the name of COOPER as and for our respective proper surname.

Dated this 15th day of September 1902.

(Sd.) AIMÉE M. COOPER.
(Sd.) HERBERT J. COOPER.
(Sd.) DUNCAN G. COOPER.

Witness to the signatures of Aimée Mona Cooper, Herbert Johnstone Cooper, and Duncan Gordon Cooper:

(Sd.) JOHN H. ELLIS, Offg. Principal, La Martinière College, Calcutta. (640—1)

The Great Eastern Hotel Wine and General Purveying Company, "Limited."

NOTICE is hereby given that the Ordinary General Meeting of the Shareholders of the Company will be held at the Registered Office of the Company, Nos. 1, 2, and 3, Old Court House Street, Calcutta, on Monday, 3rd November 1902, at 4 P.M., to receive the Directors' Report, to pass the Accounts to the 30th April last, to declare a dividend, and to transact any other business which may be brought before the Meeting.

In accordance with the Articles of Association, the Transfer Books of the Company will be closed from the 28th October to 4th November, both days inclusive.

By order of the Board,

A. E. CUNLIFFE, Secretary.

Calcutta, the 8th September 1902. (636—1—1137)

Estate Alexander Telfer Sharpe, deceased.

NOTICE is hereby given that all creditors and other persons having any claims against the estate of the deceased abovenamed are hereby required to send in writing the particulars thereof to Messrs King, Hamilton & Co., Calcutta, on or before the 24th day of October 1902, after which date the undersigned will distribute the assets of the estate of the said deceased amongst the parties entitled thereto, having regard to the claims of which he has then had notice.

And notice is hereby further given that the undersigned will not be liable for the assets or any part thereof so distributed to any person of whose claim he shall not have had notice at the time of such distribution.

Dated the 4th day of September 1902.

W. H. TAYLOR, Administrator of the property and credits of the deceased.

No 7 Hare Street, Calcutta. (615—2—1092)

Treasure Trove Case No. 7 of 1902-1903.

IT is hereby notified, under section 5 of Act VI of 1878, that on the 14th June 1902, the undermentioned idols, weighing about 673½ seers and valued at Rs. 505-2, were found by (1) Munippayal, of Kurunthangudi, and (2) Ramakon, of Pakkam Pattukkottai taluk, while they with seven or eight others were digging earth from the bed of the tank measured as Poramboke "Sombu Oorni" in paimash No. 183 of Shrotriem, Pakkam village, Pattukkottai taluk :—

	Description.		Weight in seers.	Probable value.
				Rs. A.
1.	Appar	(copper) ...	114½	85 14
2.	Sundaramurthi	(ditto) ...	94	70 8
3.	Pillaiyar	(ditto) ...	164½	123 6
4.	Natesar	(ditto) ...	36½	27 6
5.	Somaskandar	(ditto) ...	114	85 8
6.	Ditto Amman	(ditto) ...	38	29 4
7.	Peedam of five and six	(ditto) .	66½	49 14
8.	Pratheshanayazar and Amman in one Peedam (copper)		44½	33 6
	Total ...		673½	505 2

2. All persons claiming the said treasure or part thereof are hereby required to appear personally or by agent before the Collector of Tanjore at his office on the 20th January 1903, in view to the matter being enquired into and determined according to law.

F. D. P. OLDFIELD, Acting Collector.

Tanjore Collector's Office, the 6th September 1902.

Estate Baney Madhub Bonnerjee, deceased.

NOTICE TO CREDITORS.

PURSUANT to an order dated 16th June 1902 of the High Court of Judicature at Fort William in Bengal, in its Ordinary Original Civil Jurisdiction, made in suit No. 688 of 1901 (wherein James Duffus and another are plaintiffs and Jamini Bhusan Bonnerjee, the son, heir, and representative of Baney Madhub Bonnerjee, deceased, is the defendant), the creditors of Baney Madhub Bonnerjee, late of 84, Hurro Lall Mitter's Street, in the town of Calcutta, who died in or about the month of May 1899, are on or before the 20th day of November 1902 required to send to the office of the Registrar of this Court in its Original Side their names, addresses, and descriptions, the full particulars of their claims, a statement of their accounts, and the nature of the securities (if any) held by them, or in default thereof they will be peremptorily excluded from the benefit of the said decree. Every creditor holding any security may produce to transmit the same to the Registrar with the particulars of his claim, or shall produce the same before the Registrar in the Court-house on Friday, the 27th November 1902, at 12 o'clock noon, being the time appointed for adjudicating upon the claims, and in default thereof they will be precluded from the benefit of the said decree.

W. R. FINK, Registrar.

Dignam & Co., Attorneys for the plaintiffs.
High Court, Original Side, the 10th September 1902.
(668—1)

Lost

THE Government Promissory Note No. 008771, of the 3½ per cent. of 1854-55, for Rs. 500, originally standing in the name of Abinash Chandra Singha, the proprietor, by whom it was never endorsed to any other person. Payment of the above Note and the interest thereupon have been stopped at the Public Debt Office, Bank of Bengal, and application is about to be made for the issue of Duplicate in favour of the proprietor.

Name of Advertiser—NOGENDRA NATH MUKERJEE, Beadon Pharmacy, 343 Upper Chitpore Road, Calcutta.
(607—3—1085)

Lost

UPPER HALF of Calcutta Port Trust Debenture No. 417 of 4 per cent. Loan of 1900 for Rs. 1,000. Payment of principal and interest of this Debenture stopped and application made for issue of Duplicate to me, the proprietor—

RAM COMUL GUPTA.

Burdwan, the 11th September 1902. (632—3—1163)

Lost

A RECEIPT numbered 14744, dated 22nd August, and granted by Public Debt Office, Bank of Bengal, on submission of the undermentioned Government Promissory Note. Notice of loss has been given to the Public Debt Office, Bank of Bengal, and the undersigned is about to apply for surrender of the security :—

G. P. Note No.	Loan.	Amount. Rs.	Holder's name.
001668	1900-1901	10,000	Vihari Lala Mitra.

Name of the Proprietor—Vihari Lala Mitra.
Residence—No. 2 Gocul Mitra's Lane.
(624—1—1101)

INSOLVENT NOTICES.

In the Court for the Relief of Insolvent Debtors at Calcutta.

In the matter of MUTTY LAL GHOSE, an insolvent.

On Wednesday, the 3rd day of September instant, it was ordered that the matters of the petition of the said insolvent be heard on Tuesday, the 2nd day of December next, and that the said insolvent do then attend to be examined before the said Court.

Charu Chunder Bose, Attorney. (641—2)

In the matter of SHIB CHANDRA CHATTERJEE, an insolvent.

On Friday, the 5th day of September instant, it was ordered that the matters of the petition of the said insolvent be heard on Tuesday, the 2nd day of December next, and that the said insolvent do then attend to be examined before the said Court.

Norendra Nath Mitra, Attorney. (642—2)

In the matter of JOHN JORDAN ZEMIN, an insolvent.

On Wednesday, the 3rd day of September instant, it was ordered that the matters of the petition of the said insolvent be heard on Tuesday, the first Court day in January next, and that the said insolvent do then attend to be examined before the said Court.

Ghosh and Kar, Attorneys. (643—2)

In the matter of RAM NATH KHETTRY *alias* CHOTA LAUL KHETTRY, an insolvent.

On Tuesday, the 9th day of September instant, it was ordered that the matters of the petition of the said insolvent be heard on Tuesday, the 2nd day of December next, and that the said insolvent do then attend to be examined before the said Court.

Akshay Kumar Mitter, Attorney. (644—2)

In the matter of REGINALD BEAN, an insolvent.

On Thursday, the 14th day of August last, it was ordered that the matters of the petition of the said insolvent be heard on Tuesday, the 25th day of November next, and that the said insolvent do then attend to be examined before the said Court.

Insolvent in person. (645—2)

In the matter of ISABELLA MATILDA ETHEL AGACY, CHARLES LAWRENCE AGACY, and ALFRED JAMES AGACY, insolvents.

On Monday, the 18th day of August last, it was ordered that the matters of the petition of the said insolvents be heard on Tuesday, the 25th day of November next, and that the said insolvents do then attend to be examined before the said Court.

Insolvents in person. (646 2)

In the matter of EDWIN HENRY JOAKIN, an insolvent.

On Wednesday, the 13th day of August last, it was ordered that the matters of the petition of the said insolvent be heard on Tuesday, the 25th day of November next, and that the said insolvent do then attend to be examined before the said Court.

Insolvent in person. (647—2)

In the matter of BONOWARY LAL BOSE, an insolvent.

On Monday, the 11th day of August last, it was ordered that the matters of the petition of the said insolvent be heard on Tuesday, the 25th day of November next, and that the said insolvent do then attend to be examined before the said Court.

C. A. Smith, Attorney. (648—2)

In the matter of BEHARY LAUL DEY, an insolvent.

On Thursday, the 7th day of August last, it was ordered that the matters of the petition of the said insolvent be heard on Tuesday, the 25th day of November next, and that the said insolvent do then attend to be examined before the said Court.

Sarat Chunder Dutt, Attorney. (649—2)

In the matter of JOTISH CHUNDER PORAMANIC, an insolvent.

On Wednesday, the 20th day of August last, it was ordered that the matters of the petition of the said insolvent be heard on Tuesday, the 25th day of November next, and that the said insolvent do then attend to be examined before the said Court.

S. Md. Sultan Alum, Attorney. (650—2)

In the matter of JADAV CHANDRA SIKDAR and BISWAMBER SIKDAR of Abaipur, in the district of Jessore, now residing in Calcutta and lately carrying on business in copartnership as traders in jute at Nos. 86-87, Sobhabazar Street, in the town of Calcutta, and also at various stations in the mofussil, under the name and style of B. Sikdar Sons and Company, and also under the name and style of R. David (P), L. M. Sikdar and also of Jadub Chunder Bissumbhar Sikdar, insolvents.

On Thursday, the 4th day of September instant, it was, on the petition of Kedar Nath Roy, residing and carrying on business as banker and merchant at No. 13, Sobhabazar Street, in the town of Calcutta, a creditor of the said insolvents, adjudged that the said Jadav Chandra Sikdar and Biswamber Sikdar have committed an act of insolvency under the provisions of the Act XI Vic. Cap. XXI, and by another order of the same date the estate and effects of the said insolvents were vested in the Official Assignee.

A. K. Guha, Attorney. (651—2)

In the matter of ROGER JOHN DENNET, an insolvent.

On Wednesday, the 27th day of August last, it was ordered that Tuesday, the 25th day of November next, be appointed for the further hearing of this matter, and that, unless cause be shown to the contrary on that day, the said insolvent be discharged personally as well as to his after-acquired property from all liabilities for debts, claims, and demands of and against the said insolvent at the time of the filing of his petition for relief.

T. H. Wilson & Co., Attorneys. (652—2)

In the matter of JOHN WILLIAM HODGES, an insolvent.

On Friday, the 29th day of August last, it was ordered that Tuesday, the 25th day of November next, be appointed for the further hearing of this matter, and that, unless cause be shown to the contrary on that day, the said insolvent be discharged personally as well as to his after-acquired property from all liabilities for debts, claims, and demands of and against the said insolvent at the time of the filing of his petition for relief.

Fox and Mandal, Attorneys. (653—2)

In the matter of GEORGE MANSFIELD PHILIPS, an insolvent.

Notice that an application for an *ad-interim* protection order has been this day made by the said insolvent, and that such application will be heard and disposed of by the Acting Commissioner of the Insolvent Court on Thursday, the 2nd day of October next, at the hour of half-past ten o'clock in the forenoon.

☞ Any creditor of the said insolvent desirous of opposing such application must appear before the said Court at the time and place aforesaid.

C. A. Smith, Attorney. (654—1)

In the matter of MOTY LALL GHOSE of No. 9, Russick Lall Ghose's Lane, in the town of Calcutta, lately carrying on business in co partnership with Sarat Coomar Sen and Jodunath Ghose as flour merchants at No. 115, Upper Chitpore Road in Calcutta, now a prisoner in the Civil side of the Presidency Jail, an insolvent.

Notice that the petition of the said insolvent seeking the benefit of the Act XI Vic., Chapter XXI, was filed in the office of the Chief Clerk on Wednesday, the 3rd day of September instant, and by an order of the same date the estate and effects of the said insolvent were vested in the Official Assignee.

Charu Chunder Bose, Attorney. (655—1)

In the matter of TINCOWRI DUTT, residing at No. 10-1, Serpentine Lane, in Calcutta, and PURNA CHUNDER BANERJEE, residing at No. 16-1, Huzaree Mall Tank Lane, in Calcutta, both carrying on business as dealers in hosiery goods at No. 138, Old China Bazar Street, in Calcutta, under the name and style of Amulya Charan Banerjee and Company; the said Purna Chunder Banerjee also lately carrying on business alone as dealers in hosiery goods at No. 136, Old China Bazar Street, in Calcutta, under the name and style of Purna Chunder Banerjee and Company, insolvents.

Notice that the petition of the said insolvents seeking the benefit of the Act XI Vic., Chapter XXI, was filed in the office of the Chief Clerk on Wednesday, the 10th day of September instant, and by an order of the same date the estate and effects of the said insolvents were vested in the Official Assignee.

Raj Kissore Bysack, Attorney. (656—1)

In the matter of SHIB CHANDRA CHATTERJEE of No. 20, Goopi Mohan Bose's Lane, Bowbazar, formerly carried on business as dealer in stationery and various other miscellaneous goods at No. 240-1, Bowbazar Street, in the town of Calcutta, under the name, style, and firm of S. N. (P) and Company, and at present employed as a clerk in the firm of S. A. Haddy and Company of Calcutta, an insolvent.

Notice that the petition of the said insolvent seeking the benefit of the Act XI Vic., Chapter XXI, was filed in the office of the Chief Clerk on Friday, the 5th day of September instant, and by an order of the same date the estate and effects of the said insolvent were vested in the Official Assignee.

Norendra Nath Mitra, Attorney. (657—1)

In the matter of JOHN JORDAN ZEMIN of No. 9, Short Street, in the town of Calcutta, Manager of the firm of S. . Ze min and Company, an insolvent.

Notice that the petition of the said insolvent seeking the benefit of the Act XI Vic., Chapter XXI, was filed in the office of the Chief Clerk on Wednesday, the 3rd day of September instant, and by an order of the same date the estate and effects of the said insolvent were vested in the Official Assignee.

Ghosh and Kar, Attorneys. (658—1)

In the matter of RAM NATH KHETTRY *alias* CHOTA LAUL KHETTRY, residing at No. 54, Siboo Thakoor's Lane, in the town of Calcutta, lately carrying on business as broker of piece-goods at Clive Street, in the town of Calcutta, under the name, style, and firm of Ram Nath Khottry, at present having no employment, an insolvent.

Notice that the petition of the said insolvent seeking the benefit of the Act XI Vic., Chapter XXI, was filed in the office of the Chief Clerk on Tuesday, the 9th day of September instant, and by an order of the same date the estate and effects of the said insolvent were vested in the Official Assignee.

Akshay Kumar Mitter, Attorney. (659—1)

In the matter of MEIGENDRA LALL SHAW, residing at No. 8, Doctor's Lane, in the town of Calcutta, and formerly carrying on business at No. 38, Wellington Street in Calcutta as a dealer in wines and spirits under the name and style of G. C. Shaw Brothers, and also formerly carrying on business in copartnership with Ishwan Chunder Shaw under the the name and style and firm of G. C. Shaw & Co., at No. 31, Theatre Road, in the town of Calcutta aforesaid, and now in the employ of one Ishwan Chunder Shaw, an insolvent.

Notice that the petition of the said insolvent seeking the benefit of the Act XI Vic., Chapter XXI, was filed in the office of the Chief Clerk on Saturday, the 16th day of August last, and by an order of the same date the estate and effects of the said insolvent were vested in the Official Assignee.

A. K. Thakur, Attorney. (660—1)

In the matter of REGINALD BEAN, residing at No. 68, Lower Circular Road, in the town of Calcutta, serving as a Guard on the Bengal Central Railway, Sealdah an insolvent.

Notice that the petition of the said insolvent seeking the benefit of the Act XI Vic., Chapter XXI, was filed in the office of the Chief Clerk on Thursday, the 14th day of August last, and by an order of the same date the estate and effects of the said insolvent were vested in the Official Assignee.

Insolvent in person. (661—1)

In the matter of ISABELLA MATILDA ETHEL AGACY, widow and pensioner; CHARLES LAWRENCE AGACY, Licensed Measurers Department, Bengal Chamber of Commerce, and ALFRED JAMES AGACY, an Assistant, Messrs. D. Macropolo & Co., a joint family, all residing at No. 28, Ripon Street, in the town of Calcutta, insolvents.

Notice that the petition of the said insolvents seeking the benefit of the Act XI Vic., Chapter XXI, was filed in the office of the Chief Clerk on Monday, the 18th day of August last instant, and by an order of the same date the estate and effects of the said insolvents were vested in the Official Assignee.

Insolvents in person. (662—1)

In the matter of EDWIN HENRY JOAKIN, residing at No. 2-1, Kumedan Bagan Lane, in the town of Calcutta, at present a temporary accountant in the [office of the Port Commissioners, Calcutta, an insolvent.

Notice that the petition of the said insolvent seeking the benefit of the Act XI Vic., Chapter XXI, was filed in the office of the Chief Clerk on Wednesday, the 18th day of August last, and by an order of the same date the estate and effects of the said insolvent were vested in the Official Assignee.

Insolvent in person. (663—1)

In the matter of BONOWARY LALL BOSE, residing at No. 19-2, Noyan Chand Dutt's Street, in the town of Calcutta, and practising as a Pleader in the Calcutta Police Court, an insolvent.

Notice that the petition of the said insolvent seeking the benefit of the Act XI Vic., Chapter XXI, was filed in the office of the Chief Clerk on Monday, the 11th day of August last, and by an order of the same date the estate and effects of the said insolvent were vested in the Official Assignee.

C. A. Smith, Attorney. (664—1)

In the matter of BEHARY LAUL DEY, residing at Nos. 1 and 2, Bissonath, Muttylal's Lane, in the town of Calcutta, and carrying on business at No. 1, Bentinck Street, in Calcutta, in shoe materials, an insolvent.

Notice that the petition of the said insolvent seeking the benefit of the Act XI Vic., Chapter XXI, was filed in the office of the Chief Clerk on Thursday, the 7th day of August last, and by an order of the same date the estate and effects of the said insolvent were vested in the Official Assignee.

Sarat Chandra Dutt, Attorney. (665—1)

In the matter of JOTISH CHUNDER PORAMANIC, formerly of Panthaparagram in the district of Jessore, but at present of No. 82, College Street, in the town of Calcutta, who holds an employment as a singer in the *Jattra* party carried on under the name of Mothoora Nath Shaw and Nilkanto Dass, an insolvent.

Notice that the petition of the said insolvent seeking the benefit of the Act XI Vic., Chapter XXI, was filed in the office of the Chief Clerk on Wednesday, the 20th day of August last, and by an order of the same date the estate and effects of the said insolvent were vested in the Official Assignee.

S. Md. Sultan Alum, Attorney. (666—1)

In the matter of MOHAMED BUKSH AND MOHAMED SIDDIK, both residing at No. 9, Ram Mohun Ghose's Lane, Colootolah, in the town of Calcutta, both lately carrying on business as dealers in miscellaneous articles in copartnership under the name, style, and firm of Mohamed Buksh and Mohamed Siddik, at No. 90, Canning Street, in Calcutta aforesaid,—both now out of employ, insolvents.

Notice that the petition of the said insolvents seeking the benefit of the Act XI Vic., Chapter XXI, was filed in the office of the Chief Clerk on Friday, the 22nd day of August last, and by an order of the same date the estate and effects of the said insolvents were vested in the Official Assignee.

Ramee Chandra Basu, Attorney. (667—1)

Chief Clerk's Office, the 15th day of September 1902.

In the matter of BAIKANTO NATH CHATTERJEE, an insolvent.

Notice that an application for an *ad-interim* protection order has been this day made by the said insolvent, and that such application will be heard and disposed of by the Acting Commissioner of the Insolvent Court on Monday, the 22nd day of September instant, at the hour of half-past ten o'clock in the forenoon.

☞ Any creditor of the said insolvent desirous of opposing such application must appear before the said Court at the time and place aforesaid.

Raj Kissore Bysack, Attorney. (669—1)

In the matter of JOHN JORDAN ZEMIN, an insolvent.

Notice that an application for an *ad-interim* protection order has been made by the said insolvent on the 3rd instant, and that such application will be heard and disposed of by the Acting Commissioner of the Insolvent Court on Thursday, the 2nd day of October next, at the hour of half-past ten o'clock in the forenoon.

☞ Any creditor of the said insolvent desirous of opposing such application must appear before the said Court at the time and place aforesaid.

Ghosh and Kar, Attorneys. (670—1)

Chief Clerk's Office, the 16th September 1902.

In the Court of the District Judge of Hooghly.

In the matter of Bholanath Dhara, an insolvent.

BHOLANATH DHARA, of Kanshsara, thana Polba, district Hooghly, was, on the 25th July 1902, declared an insolvent and discharged on the 10th September, instant, under section 351, Civil Procedure Code.

G. K. DEB, District Judge.

Hooghly District Judge's Court, the 11th September 1902. (633—1—1167)

In the Court of the District Judge of Hooghly.

In the matter of Shaikh Abdul Sultan, an insolvent.

SHAIKH ABDUL SULTAN, of Panchla, thana Jagatballabpur, district Hooghly, was, on the 11th April 1902, declared an insolvent, and discharged on the 8th September instant under section 351, Civil Procedure Code.

G. K. DEB, District Judge.

Hooghly District Judge's Court, the 10th September 1902. (631—1—1168)

CALCUTTA POST OFFICE NOTICE.

Mails for—	Date and hour of closing at the General Post Office, Calcutta.		Route by which despatched.
	1902	P.M.	
United Kingdom, Aden, Egypt, Europe, America, West Africa *vid* United Kingdom and East Africa *vid* Aden (and also South Africa, if superscribed on the cover *vid* United Kingdom or Aden).	18th Sept.	At 6-30	For P. & O. steamer from Bombay.
		Parcels P.M.	
Parcels and money-orders for the United Kingdom and other Foreign places.	17th ,,	At 5 M.-O. P.M. At 4	Ditto ditto.
* Australasian Colonies ...	22nd ,,	,, 7-30	*Vid* Tuticorin and Colombo.*
† Straits Settlements (also China and Japan, if the steamer's name is superscribed on the cover).	17th ,,	,, 8-30	Per steamer *Laisang*.
Burma	18th ,,	,, 7-30	Per B. I. S. N. Co.'s steamer.
Burma, Penang and Singapore.	20th ,,	,, 7-30	Ditto ditto.
Akyab, Kyaukpyu and Sandoway.	20th ,,	,, 7-30	Ditto ditto.
Burma, Tavoy and Mergui ...	22nd ,,	,, 7-30	Ditto ditto.
Mauritius, Réunion, Mayotte and Nossi-Be.	17th ,,	,, 7-30	Per steamer *Fazilka* from Colombo.
Port Blair	27th ,,	,, 7-30	*Vid* Madras.

* Although the date entered in column 2 is, as far as can be calculated, the latest safe date of posting for the next Mail steamer, full allowance being made for the steamer being in advance of her published timing, Mails for the places mentioned in column 1 are despatched daily to Colombo, so that they may proceed by any steamer that has been unusually accelerated or retarded, or by any special opportunity that may be afforded by a steamer not belonging to one of the regular lines.

† Correspondence for China and Japan is despatched daily to Colombo, so that they may proceed by the first steamer available.

1. The letter-box for Inland articles will be cleared for the forenoon Mails at the following hours :—

For Goalundo, Arakan and Chittagong, at 5-30 A.M.
For Midnapore and Orissa districts, at 8-30 A.M.
For the Eastern districts, as far as Dacca and Mymensingh, at 6-30 A.M.
For Khulna and Jessore districts, at 7-30 A.M.
For Bombay, Central Provinces and Midnapore, *vid* Bengal-Nagpur Railway, at 10-45 A.M., and with a late fee of ½ anna up to 11-35 A.M.

2. The letter-box will be cleared for the evening Mails at the following hours, viz.—

For the East Indian Railway Loop Mail, at 2-30 P.M., and with a late fee of ½ anna up to 2-55 P.M.
For the Northern Bengal, Darjeeling and Assam Mails, at 3-25 P.M., and with a late fee of ½ anna up to 3-50 P.M.
For the Bombay Mail, *vid* Jubbulpore, at 6 P.M., and with a late fee of ½ anna up to 6-30 P.M.
For the Punjab Mail, at 7-30 P.M.
For Midnapore, Orissa and Madras Presidency, at 7-30 P.M. } and with a late fee of ½ anna up to 8 P.M. and with a late fee of 1 anna up to 8-45 P.M.
For the Khulna Mail, at 7-30 P.M.
For the Eastern Bengal Mail, at 7-30 P.M.

3. Late registered letters will be received between the following hours :—

For the Bombay Mail, *vid* Jubbulpore, from 5 P.M. to 6-15 P.M.
For the Punjab Mail, from 6 P.M. to 7 P.M.
For the Eastern Bengal Mail, from 6 P.M. to 7 P.M.
For the Khulna Mail, from 6 P.M. to 7 P.M.
For Midnapore, Orissa and the Madras Presidency, from 6 P.M. to 7 P.M.

NOTE.—The late fee on each registered letter will be 2 annas which must be prepaid in stamps on the letter.

4. Articles for Burma and for Port Blair by sea are received without late fee up to 7-30 P.M., and with a late fee of ½ anna up to 8 P.M.

5. On the latest safe day of despatch of Mails for the Australasian Colonies or any other Foreign Countries, *vid* Madras or Tuticorin, the letter box for Foreign articles will be cleared for the last time at 7-30 P.M., and late letters and papers fully prepaid will be received up to 8-45 P.M.

6. On the day of despatch of the Mail for Europe (Thursday), the letter-box for Foreign articles will be cleared for the last time, for articles, without the late fee, at 6-30 P.M., and late letters and papers fully prepaid will be received up to 6-45 P.M. Late registered articles will be received from 5 to 6 P.M. On other days the letter-box for Foreign articles will be cleared for the last time, without the late fee, at 6 P.M., and late letters and papers will be received up to 6-30 P.M. for despatch by any Foreign Mails, *vid* Bombay, the same night and up to 8-30 P.M., late letters and papers up to 9 P.M., for any Foreign Mails despatched by sea. Foreign Mails for despatch *vid* Madras or Tuticorin are received up to 7-30 P.M., and with a late fee up to 8-15 P.M. The late fee for Foreign articles is 4 annas, which must be prepaid in stamps affixed to the articles.

JOHN OWENS,
Presidency Postmaster.

CALCUTTA G. P. O.,
The 16th September 1902.

Nadia Rivers.

Report showing the least depths of water for the week ending Friday, the 12th September 1902.

Name of River.	Reach of River.	Least depth of water soundings.		Remarks.
		Ft.	in.	
Bhagirathi.	Entrance from Ganges ...	17	0	Momintola.
	Thence to Geriah ...	15	0	
	From Geriah to Jangipur ...	9	0	Nobokantapur.
	,, Jangipur to Berhampore	14	0	Sashpur.
	,, Berhampore to Katwa ..	14	0	Majhampur.
	,, Katwa to Nadia ...	21	0	Edrakpur.
Bhairab-Jalangi.	Entrance from Ganges ...	20	0	
	Thence to Akriganj ...	23	0	Chakharpara.
	Akriganj to junction of the Bhairab and Jalangi	18	0	Harharia.
	Thence to Patkabari	20	6	Lalnagar.
	Patkabari to Nadia	.....		Not received.
Mathabhanga.	Entrance from Ganges ...	13	0	
	Thence to Dewanganj ...	13	6	Jamalpur.
	From Dewanganj to Shikarpur	13	0	Megna.
	,, Shikarpur to Boalia ...	15	0	Matmooray.
	,, Boalia to Chuadanga ...	16	3	Boalmari.
	,, Chuadanga to Kissenganj and Hanskhali ...	15	6	Krishnapur.

Gauge Readings.

	Locality.	Date.	Hour.	Height above zero.	Height above mean sea-level.	Remarks.
			A.M.	Ft.	Ft.	
Ganges ...	Sahibganj ...	13-9-1902	6	21·25	89·25	Rise.
	Rampur Boalia	13-9-1902	Noon	19·56	61·86	,,
	Entrance of Bhagirathi Geria ...	13-9-1902	A.M. 7	...	70·50	,,
	Entrance of Bhairab-Jalangi Akriganj ...	14-9-1902	A.M. 7	...	69·45	,,
Bhagirathi	Entrance of Mathabhanga ...	12-9-1902	...	18·75	...	,,
	Jangipur ...	13-9-1902	...	...	66·10	,,
	Berhampore ...	15-9-1902	Noon P.M.	25·42	59·17	,,
	Katwa ...	13-9-1902	6	31·20	46·46	,,
Jalangi ...	Krishnagar ...	.....	...	...	...	Not received
	Sarupganj ...	13-9-1902	Noon	...	24·50	Rise.
Mathabhanga.	Hanskhali ...	13-9-1902	...	17·30	...	,,

A. K. BANERJEE, *Acctt.*,
for *Exe. Engr., Nadia Rivers Division.*

Berhampore, the 13th September 1902

Parts I, II, and III of a Descriptive Catalogue of the Sanskrit Manuscripts in the Library of the Calcutta Sanskrit College, prepared by Pandit Hrishikesa Sastri and Babu Siva Chandra Gui, M.A., B.L., of that College are offered to the public for sale. The Catalogue is to be completed in 28 parts, the price of each part being 12 annas a copy, exclusive of postage. Copies can be obtained, from the Principal of the Sanskrit College, Calcutta.

GOVERNMENT PUBLICATIONS FOR SALE

At the Bengal Secretariat Book Depôt, Writers' Buildings, Calcutta, and by the following Agents :—

AGENTS IN INDIA.

Messrs. Thacker, Spink & Co., Calcutta and Simla.
Messrs. Newman & Co., Calcutta.
Messrs. Higginbotham & Co., Madras.
Messrs. Thacker & Co., Ld., Bombay.
Messrs. A. J. Combridge & Co., Bombay.
Mr. E. Seymour Hale, 53 Esplanade Road, Fort, Bombay, and Calcutta.
The Superintendent, American Baptist Mission Press, Rangoon.
Messrs. S. K. Lahiri & Co., Printers and Booksellers, College Street, Calcutta.
Rai Sahib M. Gulab Singh & Sons, Proprietors of the Mufid-i-am Press, Lahore, Punjab.
Messrs. V. Kalyanarama Iyer & Co., Booksellers, &c., Madras.
Messrs. D. B Taraporevala Sons & Co., Booksellers, Bombay.

AGENTS IN ENGLAND.

Mr. E. A. Arnold, 37 Bedford Street, Strand, London.
Messrs. Constable & Co., 2 Whitehall Gardens, London.
Messrs. Sampson Low, Marston & Co., St. Dunstan's House, Fetter Lane, London.
Messrs. Luzac & Co., 46 Great Russell Street, London.
Messrs. Kegan Paul, Trench, Trübner & Co., Charing Cross Road, London.
Mr. B. Alfred Quaritch, 15 Piccadilly, London.
Messrs. P. S. King & Son, 2 & 4 Great Smith Street, Westminister, London.
Messrs. H S King & Co., 65 Cornhill, London.
Messrs. Williams and Norgate, Oxford.
Messrs. Deighton Bell & Co., Cambridge.

AGENTS ON THE CONTINENT.

Messrs R. Friedlander & Sohn, Berlin, N. W. Carlstrasse, 11.
Mr. Otto Harrassowitz, Leipzig.
Mr. Karl Hiersemann, Leipzig.
Mr. Ernest Leroux, 28 Rue Bonaparte, Paris.
Mr. Martinus Nijhoff, The Hague.

NOTICE.—Books required for private use can be purchased Applications should be accompanied by a remittance in each case.

All remittances on account of subscriptions to, or prices of, Gazettes, Indian Law Reports or other Government publications available for sale at the Bengal Secretariat Book Depôt, or for cost of advertisements published in the Gazettes should, in future, be made payable to the "Treasurer, Bengal Secretariat, Calcutta." Advices of such remittances, if separately sent, should be addressed to the "Accountant, Bengal Secretariat." All advertisements intended for publication in the *Calcutta* or *Bengali Gazette* should be sent direct to the Superintendent, Government Printing, Bengal.

Books required for the Public Service should be obtained through the Heads of Departments.

☞ *The amounts within parentheses are for packing and postage*

NEW PUBLICATIONS ISSUED DURING THE CURRENT QUARTER.

APPOINTMENT DEPARTMENT.

Quarterly Civil List of Bengal, corrected up to 1st July 1902. Super-Royal 8vo. Paper cover. Rs. 3. (4*a*.)

GENERAL DEPARTMENT.

Report of Emigration from the Port of Calcutta to British and Foreign Colonies, 1901. By the Protector of Emigrants, Calcutta. F'cap. Paper cover. 12*a*. (1*a*.)
Civil Engineering College, Sibpur, Calendar for 1902. Royal 8vo. Paper cover. 12*a*. (2*a*.)
Annual Report on Inland Emigration for the year 1901. F'cap. Paper cover. 6*a*. (1*a*.)
Annual Report on the Reformatory Schools at Alipore and Hazaribagh for the year 1901. F'cap. Paper cover. 4*a* (1*a*.)

JUDICIAL DEPARTMENT.

Annual Report on the Police Administration of the Town of Calcutta and its Suburbs for the year 1901. F'cap. Paper cover. Re. 1. (1*a*.)

LEGISLATIVE DEPARTMENT.

The Bengal Vaccination Act, 1880 (Bengal Act V of 1880), as modified up to 1st June 1902. Royal 8vo. Paper cover Price 4*a* (1*a*.)
The Salt Act, 1864 (Bengal Act VII of 1864), as modified up to 1st July 1902, with an appendix showing the extent to which the Indian Salt Act, 1882, is in force in Bengal. Royal 8vo. Paper cover. 3*a*. (1*a*.)

MUNICIPAL DEPARTMENT.

Triennial Report on the working of the Charitable Dispensaries under the Government of Bengal and the Calcutta Medical Institutions for the years 1899, 1900 and 1901. F'cap. Paper cover. Rs 5. 3*a*.)
Thirty-fourth Annual Report of the Sanitary Commissioner for Bengal for the year 1901. F'cap Board. Paper cover. Re. 1-12, (3*a*.)
Fifth Triennial Report of Vaccination in Bengal during the years 1899-1900, 1900-1901, and 1901-1902 F'cap. Paper cover. Re. 1. (1*a*.)

POLITICAL DEPARTMENT.

Administration Report on the Jails of Bengal for the year 1901. F'cap. Board. Paper cover. Rs 3. (3*a*.)

PUBLIC WORKS DEPARTMENT.

Electric Traction.—Six lectures delivered in March 1902 at the Civil Engineering College, Sibpur, by J. W. Meares, Esq., Electrical Engineer to the Government of Bengal. Royal, 8vo. Full cloth. Re. 1-8. (2*a*.)

Classified List and Distribution Return of Establishment of the Public Works Department, Bengal, corrected up to 30th June 1902. Super-Royal 8vo. Paper cover. 4*a*. (1*a*.)

A Manual for the guidance of the staff of the Revenue Division of the Sone Canals. By H. Toogood, Esq., Superintending Engineer, Sone Circle. Royal 8vo. Board. Paper cover. Re. 1. (2*a*.)

REVENUE DEPARTMENT.

Season and Crop Report of Bengal for the year 1901-1902. F'cap. Paper cover. 8*a*. (1*a*.)

The Sale Law Manual, a Manual of the Revenue and the Patni Sale Laws with Notes and the rules, &c., under them. Royal 8vo. Board. Paper cover. Re. 1-4. (3*a*.)

Price-list of staple food-crops in the local areas of Bengal, for the period from 1st January to 31st March 1901. F'cap. Board. Paper cover. Re. 1. (2*a*.)

Rules for the keeping and inspection of accounts of collections in Government and Wards' Estates. Published under the authority of the Board of Revenue, L. P. Royal 8vo. Board. Paper cover. As. 8. (1*a*.)

The Government Estates' Manual, 1902. Royal 8vo. Board. Paper cover. Re. 1. (3*a*.)

PUBLICATIONS ISSUED BETWEEN THE 1ST JANUARY AND THE 30TH JUNE 1902.

APPOINTMENT DEPARTMENT.

Quarterly Civil List of Bengal corrected up to 1st April 1902. Super-royal 8vo. Paper cover. Price Rs. 3. (4*a*.)

FINANCIAL DEPARTMENT.

The Stamp Manual, 1902. A Manual for the guidance of officers in the administration of the Stamp Department. Royal 8vo. Board. Paper cover. Price Re. 1-8. (6*a*.)

Annual Report on the consumption of Stationery in Bengal during 1900-1901. F'cap. Paper cover. Rs. 3. (2*a*.)

GENERAL DEPARTMENT.

List of Officers in the Subordinate Educational Service, Bengal, corrected up to 1st April 1902. F'cap. Paper cover. 8*a*. (1*a*.)

JUDICIAL DEPARTMENT.

Question Papers set at the Pleadership and Muktearship Examinations for the year 1902. Royal 8vo. Paper cover. Price 2*a*. (1*a*.)

Question Papers set at the Examination of candidates for appointment as Sub-Inspectors of Police. July and November 1901. Royal 8vo. Paper cover. Price 5*a*. (1*a*.)

Question Papers set at the Examination of candidates for recruiting the staff of Superior Police Officers in Bengal and Assam, held in November 1901. Royal 8vo. Paper cover. Price 8*a*. (1*a*.)

LEGISLATIVE DEPARTMENT.

The Court of Wards' Act, 1879 (Bengal Act IX of 1879), in Hindi, as modified up to the 1st July 1901. Royal 8vo. Paper cover. Price 6*a* (1*a*.)

The Calcutta Port Act, 1890 (Bengal Act III of 1890), as modified up to 1st April 1902. Royal 8vo. Paper cover. Price 10*a*. (1*a*.)

MUNICIPAL DEPARTMENT.

Annual Returns of the Lunatic Asylums in Bengal with brief notes for the year 1901. Compiled by the Inspector-General of Civil Hospitals. F'cap. Paper cover. Price Re. 1. (2*a*.)

Account Rules under the Local Self-Government Act, Part VIII. F'cap. Paper cover. Price 8*a*. (.)

Annual Report of the Chemical Examiner's Department, Bengal, 1901. F'cap. Paper cover Price 8*a*. (2*a*.)

PUBLIC WORKS DEPARTMENT.

Distribution Return of Officers and Subordinates employed on Local Works in Bengal, corrected up to 31st December 1901. Super-royal 8vo. Paper cover. Price 2*a*. (1*a*.)

Embankment and Drainage Report of the Government of Bengal, Irrigation Department, for the year 1900-1901. F'cap. Boards Paper cover. Price Re. 2 (3*a*.)

Classified List and Distribution Return of Establishment corrected up to 31st March 1902. Super-royal 8vo. Paper cover. Price 4*a*. (1*a*.)

Dacca Electric Lighting License, 1902. F'cap. Paper cover. Price 14*a*. (1*a*.)

Notes on the construction of Railways in India (for students) with 5 charts. F'cap Paper cover. Price Re. 1. (1*a*.)

REVENUE DEPARTMENT.

Annual Report of the Burdwan Experimental Farm for the year 1900-1901. F'cap. Paper cover. Price 3*a*. (1*a*.)

Annual Report on the Survey Operations in Bengal during the year 1900-1901 (from 1st October 1900 to 30th September 1901). F'cap. Paper cover. Price Re. 1-8. (2*a*.)

Annual Report of the Director of the Department of Land Records, Bengal, on Settlements, for the year ending 30th September 1901. F'cap. Paper cover. Price 8*a*. (1*a*.)

The Practice and Procedure Manual, published under the authority of the Board of Revenue, Royal 8vo. Board. Paper cover. Price 12*a*. (3*a*).

OLDER PUBLICATIONS.

A General Catalogue of all Government Publications (corrected up to 31st December, 1901) may be obtained *gratis* on application to the Officer in charge, Bengal Secretariat Book Depôt.

Publications for sale at the office of the Chief Inspector of Explosives with the Government of India.

Rules for the manufacture, possession and sale of explosives issued by each of the Local Governments and Administrations Price 12*a*

Rules for the transport and importation of explosives issued by the Government of India Price 12*a*

Rules for the transport and importation of explosives at the Port of Calcutta. Price 4*a*.

GOVERNMENT PUBLICATIONS FOR SALE

BY THE SUPERINTENDENT OF GOVERNMENT PRINTING, INDIA, 8 HASTINGS STREET, CALCUTTA.

[A General Catalogue of all Government Publications may be obtained gratis from the Government Central Press, Calcutta.]

All books published by the Superintendent of Government Printing, India, can be purchased, either directly or through the following or any other booksellers:—

AGENTS IN INDIA.

Messrs. Thacker, Spink & Co., Calcutta and Simla.
Messrs Newman & Co., Calcutta.
Messrs. Higginbotham & Co., Madras.
Messrs. Thacker & Co., Ld., Bombay.
Messrs. A. J. Combridge & Co, Bombay.
Messrs. V. Kalyanarama Iyer & Co., Madras.
Messrs. D. B. Taraporevala, Sons & Co., Bombay.
Superintendent, American Baptist Mission Press, Rangoon.
Rai Sahib M. Gulab Singh and Sons, Mufid-I-Am Press, Lahore.
Manager, Educational Book Depôts, Nagpur and Jubbulpore.*
Manager of the Imperial Book Depôt, 63 Chandni Chauk Street, Delhi.*
Manager, "East Coast News," Vizagapatam.*
Manager, "The Agra Medical Hall and Co-operative Association, Limited" (Successors to A. John & Co.), Agra.*
Mr. T. K. Seetharama Aiyar, Kumbakonam.*
Lala Debi Prasad, Vakil and Manager of Law Press, Cawnpore.*

AGENTS IN EUROPE.

Mr. E. A. Arnold, 37 Bedford Street, Strand, London.
Messrs. Constable & Co., 2 Whitehall Gardens, London.
Messrs. Sampson Low, Marston & Co., St. Dunstan's House, Fetter Lane, London.
Messrs. Luzac & Co., 46 Great Russel Street, London.
Messrs. Kegan Paul, Trench, Trübner & Co., Charing Cross Road, London.
Mr. B. Alfred Quaritch, 15 Piccadilly, London.
Messrs. P. S. King and Son, 2 & 4 Great Smith Street, Westminster.
Messrs. H. S. King & Co., 65 Cornhill, London, are also Agents for the sale of the Indian Army List.
Mr. Otto Harrassowitz, Mr. Karl Hiersemann } Leipzig.
Messrs. R. Friedlander & Sohn, Berlin, N. W. Carlstrasse, 11.
Mr. Ernest Leroux, 28 Rue Bonaparte, Paris.
Mr. Martinus Nijhoff, the Hague, Holland.
Messrs. Williams and Norgate, Oxford.
Messrs. Deighton Bell & Co., Cambridge.

* Agents for sale of the Legislative Department publications.

NOTICE.—Books and Acts required for private use only can be purchased. Applications should be accompanied by a remittance, unless it is wished that the books should be sent by value-payable post, in which case, besides the ordinary postage, an additional charge is made for registration and commission.

Books and Acts required for the public service should be obtained through Local Governments to whom the applicant is subordinate.

Applications for Government publications which are no longer in print should be made to the Agents of the particular Government under whose orders they were originally issued.

The amounts within parentheses are for packing and postage.

List of New Books published during the Current Quarter.

LEGISLATIVE DEPARTMENT.

List of General rules and orders under Statutes and General Acts in force in British India Corrected to 31st March 1902. Royal 8vo. Stitched. Re. 1 8*a*. or 2*s*. 3*d*. (3*a*.)
Madras Code. Third Edition, in two Volumes. 1901. Super-Royal 8vo. Cloth. Rs. 6 or 9*s*. (8*a*.) each.
The Indian Lunatic Asylums Act, 1858 (Act XXXVI of 1858), as modified up to 31st May, 1902. 5*a*. 6*p*. or 6*d*. (1*a*.)
The Agriculturists Loans Act, 1884 (Act XII of 1884), as modified up to 15th December, 1896, and with foot-notes brought down to the 1st June, 1902. 2*a*. or 3*d*. (1*a*.)
The Northern Indian Ferries Act, 1878 (Act XVII of 1878), as modified up to 1st June, 1902. 6*a*. or 7*d*. (1*a*.)
The Indian Tariff Act, 1894 (Act VIII of 1894), as modified up to 30th June, 1902. 8*a*. or 9*d*. (1*a*.)

HOME DEPARTMENT.

Report on the Nature of Kala-Azar, by Major Ronald Ross, I.M.S. F'cap. Board Rs. 2 or 3*s* (3*a*.)
Report of the Indian Universities Commission will shortly be available on sale at the Government Central Press, Calcutta.
Scientific Memoirs by Officers of the Medical and Sanitary Departments of the Government of India. Standardisation of Calmette's Anti-Venomous Serum with Pure Cobra Venom. The Deterioration of this Serum through keeping in India by Captain G. Lamb, M.B., I.M.S., and Wm. Hanna, Esq., M.B., etc. New series, No I. Super Royal 4to. Paper cover. 3*a*. or 4*d*. (1*a*.)
Assam Census Report, 1901, Parts I and II. Rs. 2 or 2*s*. 8*d*. each.

FINANCE AND COMMERCE DEPARTMENT.

List of Officers in the Finance and Commerce Department. Corrected to 1st May 1902. Royal 8vo. Paper cover. 4*a*. or 5*d*. (1*a*.)
Statistics compiled from the Finance and Revenue Accounts of the Government of India. Receipts and Disbursements of Home and Indian Accounts from 1st April 1892 to 31st March 1900. F'cap. Board. Rs. 2 or 3*s*. (7*a*.)

STATISTICAL DEPARTMENT.

Review of the Trade of India in 1901-1902. F'cap. Paper cover. 8*a*. or 9*d*. (2*a*.)
Statistics of Cotton Spinning and Weaving in the Indian Mills in April 1902, and in the corresponding month of 1900 and 1901. Royal 8vo. Stitched. 2*a*. or 2*d*. (1*a*.)
Accounts of the External Land Trade of British India for the month of April 1902. Royal 8vo. Stitched. 8*a*. or 9*d*. (2*a*.

Trade and Navigation Accounts of British India for the month of June 1902. No. 3. Royal 8vo. Stitched. 8a or 9d. (2a)

Area and yield of certain crops from 1891-1892 to 1901-1902 F'cap. Paper cover 5a. or 6d. (8a.)

Accounts relating to the Trade carried by Rail and River in India in the quarter and in the twelve months ending March 1902, compared with the corresponding periods of the years 1900 and 1901. No. 4 of 1901-1902. F'cap. Paper cover. 8a. or 9d. (2a)

Agricultural Statistics of India for the years 1896-1897 to 1900-1901, 17th issue, in two parts. F'cap. Board. Both parts Rs. 3-8a. or 5s. 3d (12a.)

COMPTROLLER-GENERAL.

Civil Estimates, 1902-1903. F'cap. Board. Vols I and II. Rs. 3 or 4s. 6d. (13a.) each volume.

FOREIGN DEPARTMENT.

Report on Sanitation, Dispensaries, and Jails in Rajputana for 1900 and on Vaccination for the year 1900 1901. F'cap. Board. Re 1 or 1s. 6d. (4a.)

MILITARY DEPARTMENT.

List of Light houses and Light-vessels in British India, including those in the Gulf of Aden as existing at the end of 1901. 21st Issue. Royal 8vo. Board. Re. 1 or 1s. 6d. (2a.)

The Quarterly Indian Army List for July 1902. Royal 8vo. Paper cover. Rs 3 or 4s. 6d. (2a.)

Military Works Services Classified List and istribution Return. Corrected up to 30th June 1902. Royal 8vo. Paper cover. 4a. or 5d. (1a.)

General List of Vouchers required to support Credits and Charges in Supply and Transport Cash and Store Accounts. India. Royal 8vo. Paper cover. 10a. or 1s. (3a.)

PUBLIC WORKS DEPARTMENT.

Administration Report on the Railways in India for the calendar year 1901. F'cap. Paper cover. Rs 2 or 2s. 8d. (8a)

Public Works Department Classified List and Distribution Return of Establishment. Corrected to 30th June 1902. Super Royal 8vo. Paper cover. Rs. 2 or 3s. (4a.)

Classified List of the Subordinate Establishment. Corrected to 30th June 1902. Super Royal 8vo. Paper cover. 4a. or 5d (1a.)

REVENUE AND AGRICULTURE DEPARTMENT

Technical Art Series for 1901. Together with their explanatory text and cover. Nos. I to XII. 4a. or 5d. (3a.) per plate.

List of Books published from January to June 1902.

LEGISLATIVE DEPARTMENT.

Chronological Tables of the Indian Statutes compiled, under the orders of the Government of India, by F. G. Wigley, Esq. Royal 8vo. Cloth. *Rs.* 4 or 6s. (7a.)

The Indian Penal Code (Act XLV of 1860), as modified up to the 1st July 1899, and with foot-notes brought down to 1st April 1901. *Re.* 2-8 or 3s. 9d. (6a.)

The Indian Factories Act, 1881, as modified up to the 1st April 1891 (with foot-notes brought down to 1st July 1901). 5a. 6p. or 6d. (1a. 6p.)

Effect of Legislation for 1898, 1899, and 1900. *Re.* 1 or 1s. 6d. (2a.)

Chronological Tables of the Indian Statutes, 1901. *Re.* 1 or 1s. 6d. (2a.)

A Digest of Indian Law Cases, Vol. III. Cloth bound. *Rs.* 12 or 18s. (10a.)

Ditto ditto ditto. Quarter bound. *Rs.* 13 or 19s. 6d. (10a.)

Act IX of 1901. An Act further to amend the Indian Articles of War. 1a. or 1d. (1a.)

Act X of 1901. An Act further to amend the Court-fees Act, 1870. 1a. 3p or 1d (1a.)

Act XI of 1901. An Act to facilitate the citation of certain Enactments and to amend and repeal certain obsolete Enactments.

Regulation III of 1901. A Regulation further to provide for the suppression of crime in certain frontier districts. 7a. 6p. or 9d. (1a. 6p.)

Regulation IV of 1901. A Regulation to make better provision for the suppression of murderous outrages in certain frontier tracts. 2a. 6p. (1a.)

Regulation V of 1901. A Regulation further to amend the Upper Burma Land and Revenue Regulation, 1899. 1a. 9p. or 2d. (1a.)

Regulation VI of 1901. A Regulation to repeal so much as is unrepealed of the Punjab Frontier Regulation, 1872, and of the Hazara Settlement Rules, 1a. or 1d (1a.)

Regulation VII of 1901. A Regulation to alter certain of the laws in force in the North-West Frontier Province, to declare that certain Enactments are in force therein, and to bar the application of certain others hereto. 11a. or 1s. 3d. (2a.)

Corrigendum slip for Act XIII of 1900 1a.

Title-page and Contents to Acts of 1901. 1a. 6p (1a)

Index to Acts of 1901. 2a. 9p. or 3d. (1a.)

The European Vagrancy Act, 1874 (IX of 1874), as modified up to 1st December, 1901. 6a. 6p. or 7d. (1a.)

The Chaukidars Act, 1856 (XX of 1856), as modified up to 1st December, 1901. 7a. 6p. or 8d. (1a.)

The Registration of Ships Act, 1841 and 1850 (X of 1841 and XI of 1950), as modified up to 1st December 1893, and with foot-notes brought down to 1st December, 1901. 7a. or 7d. (1a.)

Table showing the effect of Legislation in the Governor-General's Council during 1901. 6a. or 6d. (1a.)

LIST OF TRANSLATIONS AND TRANSLITERATIONS OF ACTS PUBLISHED FROM 1ST OCTOBER 1901 TO 31ST MARCH 1902.

The Cattle-trespass Act, 1871 (I of 1871), as modified up to the 1st April 1901. In Urdu. 2a. (1a.)

Ditto. In Hindi. 2a. (1a.)

Act IX of 1901 (an Act further to amend the Indian Articles of War). In Urdu. 3p. (1a.)

Ditto. In Hindi. 3p. 1a.

Act X of 1901 (an Act further to amend the Court-fees Act, 1870). In Urdu. 3p. (1a.)

Ditto. In Hindi. 3p. (1a.)

HOME DEPARTMENT.

Chronological Tables for 1902, embodying Notifications by the Government of Bengal and Government of India prescribing holidays during the year with corresponding dates in English, Bengali, Velati, Fusli etc. Royal 8vo. Paper cover. 4a. or 4d. (1a.)

Annual Report of the Sanitary Commissioner with the Government of India, 1900, with Appendices and Returns of Sickness and Mortality among European Troops, Native Troops, and Prisoners in India, for the year. F'cap. Boards. *Rs.* 3 or 4s. 6d. (8a.)

Report of Proceedings of the Central Indigenous Drugs Committee of India, Volume I. Royal 8vo. Board. Rs. 3-8 or 5s. 3d. (7a.)

List of Europeans and others in the English Factories in Bengal at the time of the Siege of Calcutta in the year 1756, with an appendix containing lists of European Sufferers. By S. Charles Hill, Esq., B.A., B.SC. Super-Royal 4to. Paper cover. Rs 2 or 3s. (8a.)

Judicial and Administrative Statistics for British India. 6th issue, 1900-1901, and preceding years. F'cap. Board. Rs. 2 or 3s.(10a.)

The Countess of Dufferin's Fund Seventeenth Annual Report of the National Association for Supplying Female Medical Aid to the Women of India for the year 1901. Super-Royal 8vo. Re. 1 or 1s. 4d. (3a.)

DEPARTMENT OF REVENUE AND AGRICULTURE.

List of Officers in the Survey and other Scientific and Minor Departments subordinate to the Government of India in the Department of Revenue and Agriculture, corrected to 1st July 1901. Royal 8vo. Paper cover. 8*a.* or 9*d.* (2*a.*)

Report of the Committee on the Establishment of Co-operative Credit Societies in India F'cap. Paper cover. 4*a.* or 5*d.* (2*a.*)

Forest Flora of the School Circle, North Western Provinces, being a descriptive list of the indigenous woody plants of the Shaharanpur and Dehra Dun districts and the adjoining portions of the Tehri-Garhwal State in the North-Western Provinces, with Analyses. Double Crown. 16mo. Full cloth. Re. 1-8 or 2*s.* (3*a.*)

Archæological Exploration in Chinese Turkestan. By Dr. M. A. Stein. Royal 4to. Cloth. Rs. 4 or 6*s* (4*a.*)

Land Revenue Policy of the Indian Government. Royal 8vo. Cloth. 10*a.* or 1*s.* (4*a.*)

FOREIGN DEPARTMENT.

Report on the Administration of the Baluchistan Agency for 1900-1901. Re. 1-8 or 2*s.* 3*d.* (3*a.*)

Report on the Administration of the Hyderabad Assigned Districts for the year 1900-1901. F'cap. Limp cover. Rs. 3-12 or 5*s.* 6*d.* (6*a.*)

Report on the Political Administration of the territories within the Central India Agency for 1900-1901. F'cap. Limp cover. *Re.* 1-8 or 2*s.* (3*a.*)

Annotated Returns of the Dispensaries in Central India for 1900. F'cap. Limp cover. *Re.* 1-8 or 2*s.* (3*a.*)

Report on the Administration of the Civil and Military Station of Bangalore for the year 1900-1901. F'cap. Board. 8*a.* or 9*d.* (2*a.*)

Grammar and Vocabulary of Waziri Pashto. By J. G. Lorimer, Esq., I.C.S. Royal 8vo. Board. Rs. 3 or 4*s.* 6*d.* (5*a.*)

FINANCE AND COMMERCE DEPARTMENT.

List of Officers in the Finance and Commerce Department. Corrected to December 1901; to April 1902 4*a.* or 5*d.* (1*a.*) each.

Papers relating to the proposed Establishment of a Central Bank in India. F'cap. Board. Re. 1 or 1*s.* 6*d.* (4*a.*)

Administration Report of the Mint at Bombay and Calcutta for 1900-1901. F'cap. Paper cover. Re. 1 or 1*s.* 6*d.* (2*a.*)

Schedule IV of the Indian Tariff Act (VIII of 1878) of 1902. Royal 8vo. Stitched. 6*a.* or 6*d.* (1*a.*)

STATISTICAL DEPARTMENT.

Trade and Navigation Accounts of British India for the months of December 1901 to May 1902. Royal 8vo. Stitched. 8*a.* or 9*d.* (2*a.*) each.

Accounts of the External Land Trade of British India for the months of September 1901 to March 1902. Royal 8vo. Stitched. 8*a.* or 9*d.* (2*a.*) each.

Accounts relating to the Trade carried by Rail and River in India in the quarter ending September 1901. Compared with the corresponding periods of the years 1899 and 1900 No. 2 of 1901-1902. F'cap. Paper cover. 8*a.* or 9*d.* (2*a.*)

Accounts relating to the Trade carried by Rail and River in India in the quarter ending December 1901. Compared with the corresponding periods of the years 1899 and 1900. No 3 of 1901-1902. F'cap. Paper cover. 8*a.* or 9*d.* (2*a.*)

Accounts of the Trade of the French Possessions in India in the year ending 31st March 1901, and the four preceding years F'cap. Paper cover. 2*a.* or 3*d.* (1*a.*)

Statistics of Cotton Spinning and Weaving in the Indian Mills in January, February, and March 1902; in the ten months, April 1901 to January 1902; in the eleven months, April 1901 to February 1902, and in the twelve months, April 1901 to March 1902. Compared with the corresponding period of 1899-1900 and 1900-1901. Royal 8vo. Stitched. 2*a.* or 2*d.* (1*a.*) each.

Accounts of the Trade of Aden in the year ending 31st March 1901, and the four preceding years. F'cap. Paper cover. 10*a.* or 1*s.* (2*a.*)

Accounts of the Trade of the Portuguese Possessions in India in the year 1899-1900 and the four preceding years. F'cap. Paper cover. 2*a.* 3*d.* (1*a.*)

Prices and Wages in India. Nineteenth issue, 1902. Super-Royal 4to. Board. Re. 1-8 or 2*s* (9*a.*)

COMPTROLLER-GENERAL.

Finance and Revenue Accounts of the Government of India for 1900-1901. F'cap. Board. Re. 2 or 3*s.* (8*a.*)

Appropriation Report on the Accounts of the Government of India for 1900-1901. By A. F. Cox, Esq. F'cap. Board. 8*a.* (6*a*).

MILITARY DEPARTMENT.

The Monthly Indian Army List for February to March, May, June 1902. Royal 8vo. Paper cover. Re 1-8 or 2*s.* 3*d.* (4*a.*) each.

Return of Wrecks and Casualties in Indian Waters for the year 1900. F'cap. Stiff cover. 12*a.* or 1*s.* (3*a.*)

Military Works Services Classified List and Distribution Return. Corrected up to 31st December 1901. Royal 8vo. Paper cover. 4*a.* or 5*d.* (1*a.*)

Indian Military Budget Estimate for the year 1902-1903. F'cap. Board. Re. 1-8 or 2*s.* 3*d.* (8*a.*)

PUBLIC WORKS DEPARTMENT.

Public Works Department Classified List and Distribution Return of Establishment. Corrected up to 31st December 1901. Super-Royal 8vo. Paper cover. Rs. 2 or 3*s.* (4*a.*)

Classified List (Public Works Department), Subordinate Establishment. Corrected up to 31st December 1901. Super-Royal 8vo. Paper cover. 4*a.* or 4*d.* (1*a.*)

Budget Estimate of the Indo-European Telegraph Department for the year 1902-1903. F'cap. Paper cover 8*a.* or 9*d.* (1*a.* 6*p.*)

Budget Estimate of the Indian Telegraph Department for the year 1902-1903. F'cap. Paper cover. 8*a.* or 9*d.* (1*a.* 6*p.*)

History of Services of the Officers of the Engineer, Accounts, and State Railway Revenue Establishments. Corrected to 31st December 1901. In two Volumes. Royal 8vo. Board. Vol. I, Rs. 2-8 or 3*s.* 9*d.* (6*a.*). Vol. II Rs. 2-8 or 3*s.* 9*d.* (6*a.*) Complete, Rs. 5 or 7*s.* 6*d.* (9*a.*)

List of new books for sale at the Thomason College, Roorkee, which were not advertised before.

Roorkee Treatise on "Railways," 4th Edition, revised by F. Wolley Dod, M.C.E. Price, Rs. 3 per copy.

Roorkee Treatise on "Irrigation Works." By Lieutenant-Colonel J. Clibborn, I.S.C., B.A., L.C.E., C.I.E. Price Rs. 9 per copy.

Roorkee Treatise on "Sanitary Engineering." Compiled by Lieutenant-Colonel J. Clibborn, I.S.C., B.A., L.C.E., C.I.E. Price, Rs. 4-8 per copy.

Roorkee Manual of "Applied Mechanics," Volume II. The stability of structures mostly by graphic methods, by Lieutenant-Colonel J H. C. Harrison, R E. Price, Rs. 8-2 per copy

Roorkee Manual of Hydraulics. Price per copy, Re. 1 4. (No. XIX, Elementary Treatise). By E. F. Tipple, Esq., B A.

Designs for Wooden Bridges, together with rules for calculating the area of waterway, &c., and Plates. By late Rai Bahadur Kunhya Lal. Price per set, Rs. 4-2

Pamphlet on Examination for Acid Radicals : Tables giving Analysis of Acids. Price per copy, 8*a*.

Pamphlet on Examination for Acid Bases : Tables giving Analysis of Metallic Bases. Price, 8*a*. per copy.

Pamphlet on Note on Masonry Arches (College publication). Price, 4*a*. per copy.
Pamphlet on Small Direct Well Pumping Installations. Price, 4*a* per copy.
Pamphlet on Experiments made on the passage of water through the sand of the Chenab River at the Khanki Weir. By Lieutenant-Colonel J. Clibborn, I S.C., C.A., L C E., C.I.E Price per copy, 12*a*.
Indian Household Account Book for a period of two years, comprising Daily Table Expense Account, Bread, Butter and Milk Account, Dhobey's Account, Servants' Wages Account, etc. Price, Rs. 3 per copy.

Cash must accompany order. Articles are sent by V.-P. P. to persons in Government employment only.

Application is to be made to the Curator, Thomason College Book Depôt, Roorkee.

Half-yearly list of new books and periodicals for sale at the Library of the Asiatic Society of Bengal, 57 Park Street, Calcutta.

ASIATIC SOCIETY'S PUBLICATIONS.

Proceedings Nos. 9 to 11 of 1901 and No. 1 of 1902, at 8*a*.
Journal, Part I, No. 2 of 1901, at Rs. 2.
" Part II, No. 2 of 1901, at Rs 2.
" Part III, No. 2 of 1901, and Part III, No. 1 of 1902, at Rs. 2.

BIBLIOTHECA INDICA.

Upamitibhavaprapancha Katha. Fasc 4 at 6*a*.
Catapatha Brahmana. Vol. I, Fasc. 5, at 6*a*.
Varsakriya Kaumudi. Fasc. 3 and 4, at 6*a*.
Nityacarapaddhati. Fasc. 2 and 3, at 6*a*.
Apastamba Sranta Sutra. Vol. III, Fasc. 16, at 6*a*.
Mahabhasyapradipodyota Vol. II, Fasc. 2 and 3, at 6*a*.
Al Muquddasai (English.) Vol. I, Fasc. 2, at 12*a*.

List of Books published by the Meteorological Department during the current quarter.

Monthly Weather Review of India for the month of February 1902. By John Eliot and Lala Hem Raj (illustrated by 5 plates) Quarto Paper cover. Re. 1.
Indian Meteorological Memoirs, Volume XII, Part III. By John Eliot (illustrated by 68 plates) Quarto. Paper cover. Rs. 3.
Indian Meteorological Memoirs, Volume XII, Part IV. By W. L. Dallas, Quarto. Paper cover. Rs. 3
Monthly Weather Review of India for March 1902 By John Murray and Hem Raj. (Illustrated by 5 plates) Quarto. Paper cover. Re. 1.

List of books published by Meteorological Department from 1st January to 30th June, 1902.

Monthly Weather Review of India, from September, 1901, to January, 1902. By W. L. Dallas (illustrated by five plates). Quarto Paper cover. Re. 1 per month
Report of the Director, Government Observatory, Bombay, for the year ending 31st December, 1901. By N. A. F. Moos. Quarto Paper cover.
Report on the Kodaikanal and Madras Observatories for the period 1st April to 31st December, 1901. By C. Michie Smith. Quarto. Paper cover.
Indian Meteorological Memoirs, Volume XII, Part II. By John Eliot. Quarto. Paper cover. Rs. 3.
Indian Meteorological Memoirs, Volume XIII. By John Eliot. Quarto. Paper cover Rs 5.

The Indian Law Reports.

Published under Authority.

THE Indian Law Reports, published under the authority of the Governor-General in Council, appear in monthly parts, published as soon as possible after the first of each month at Calcutta, Madras, Bombay, and Allahabad, and comprise four series—one for the Calcutta High Court, a second for the Madras High Court, a third for the Bombay High Court, and a fourth for the Allahabad High Court. The cases heard by the Privy Council on appeal from each High Court are reported in the Series for that High Court. Cases heard by the Privy Council on appeal from Provinces in India not subject to any High Court are reported in the Calcutta Series.

The Calcutta Series is distributed by the Bengal Secretariat Book Depôt, and the Madras, Bombay, and Allahabad Series are distributed direct from Madras, Bombay, and Allahabad respectively.

In supersession of the previous advertisements, on and from the 1st January 1889 the terms of subscription and sale will be as follows for current issues as well as for back numbers of the reports from 1876:—

Terms of subscription, payable annually in advance.

For the complete series, *including postage* (Inland rate) Rs. 22-8.

Ditto, ditto (Overland rate) Rs. 28.

	Without postage.	With postage.
	Rs. A. P.	Rs. A. P.
For the Calcutta Series	10 0 0	12 8 0
,, each of the Madras, Bombay, and Allahabad Series	6 0 0	7 0 0
,, a part of the Calcutta Series purchased separately (*inclusive of postage in India*)	.....	2 0 0
,, a part of each of the Madras, Bombay, and Allahabad Series purchased separately (*inclusive of postage in India*)	.....	1 0 0

The following are the rates at which deductions will be made for parts out of print and at which duplicate copies will be supplied to subscribers when required in place of copies lost in transit, provided complaint of non-receipt is made to the Publisher within three months of the date of publication:—

	For town.	For mufassal.
	Rs. A. P.	Rs. A. P.
For the Calcutta Series, per copy ...	0 8 9	0 10 3
,, each of the Madras, Bombay, and Allahabad Series, per copy ...	0 5 2	0 5 9
,, the Calcutta Series, for the year	7 2 6	8 6 3
,, each of the Madras, Bombay and Allahabad Series, for the year	4 4 6	4 11 3

Persons desiring to subscribe for or purchase the Report should apply to—

The Superintendent, Government Press, Madras.

,, Superintendent, Government Central Press, Bombay.

,, Curator of Government Books, United Provinces of Agra and Oudh, Allahabad.

,, Officer in charge, Bengal Secretariat Book Depôt, Calcutta.

Orders and subscriptions for 1903 should be at once registered and remitted by money-order payable to the Treasurer, Bengal Secretariat, Calcutta.

ADVERTISEMENTS will be received for publication on the wrappers of the Indian Law Reports, Calcutta Series, at the following rates, payable in advance—

	One page.	Half page.	Quarter page.
	Rs.	Rs.	Rs.
For one issue ...	20	14	9
,, three issues ...	55	36	24
,, six ,, ...	100	68	45
,, nine ,, ...	145	96	64
,, twelve ,, ...	180	120	80

SEVERAL volumes of the BENGAL LAW REPORTS, from August 1868 to December 1875, and FULL BENCH RULINGS, Parts I and II, are available at the following rates:—

	Without postage.	With postage.
	Rs. A. P.	Rs. A. P.
Bengal Law Reports, for one year ...	20 0 0	22 8 0
Single copies, Rs. 2 per copy.		
Full Bench Rulings, Parts I and II ...	20 0 0	22 8 0

Obtainable at the Bengal Secretariat Book Depôt, Writers' Buildings, Calcutta.

Remittances to be forwarded to the Treasurer, Bengal Secretariat, Writers' Buildings, Calcutta.

The complete series of the INDIAN LAW REPORTS for the years 1876 to 1885, and 1890 to 1892, 1894, 1896 to 1901 having now been reprinted, are available, and may be purchased for all the years, or any particular year, on application to the Officer in charge, Bengal Secretariat Book Depôt.

The wanting parts of the Reports for the remaining years are being reprinted, and complete Reports from the beginning to date will be available shortly.

NOTICE TO SUBSCRIBERS.

SUBSCRIBERS are hereby informed that, unless complaint of non-receipt of any number is made to the Publisher of the series within three months of the date of publication, the benefits of the subscription rates for copies lost in transit will not be allowed, and full rates will be charged. The price per copy of each of the four series at subscription rates and at full rates is shown below:—

PER COPY.

Subscription rate.

	Town.	Mofussal.
	Rs. A. P.	Rs. A. P.
Calcutta Series	0 8 9	0 10 3
Each of the Madras, Bombay, and Allahabad Series ...	0 5 2	0 5 9

Full rate.

	Town.	Mofussal.
	Rs. A. P.	Rs. A. P.
Calcutta Series	2 0 0	2 0 0
Each of the Madras, Bombay, and Allahabad Series ...	1 0 0	1 0 0

Notice.

THE *CALCUTTA GAZETTE.*

The 1st March 1901.—From this date the subscription to, and postage for, the *Calcutta Gazette* will be at the following rates, payable in advance:—

PER ANNUM.	For Calcutta.	For the Mufassal, including postage.
	Rs. A.	Rs. A.
Entire *Gazette*	15 0	20 0
Parts I, Ia and Ib together ...	5 0	7 8
Part II	1 0	2 12
Parts III, IV and IVA together ...	4 0	6 0
,, V and VI together ...	2 0	3 0
Appendix (Marine Notifications)	1 0	2 12
Supplement	5 0	7 8
PER ISSUE.		
Entire *Gazette*	0 8	0 10
Supplement	0 4	0 5

N.B.—Separate Parts of each issue of the *Gazette*, and occasionally important Rules and Extracts, can be obtained from the Officer in charge, Bengal Secretariat Book Depôt, at the rate of one anna for every sixteen pages or a fraction thereof. Postage according to weight.

RATES FOR ADVERTISEMENTS in the *Calcutta Gazette*:—

Full Page, per issue ... ... Rs. 20

Half ,, ,, ,, ... ,, 10

Casual advertisements, 4 annas per line.

The Review of the Maritime Trade of Calcutta for the year 1901-1902, prepared by the Collector of Customs, may now be obtained on application to the Superintendent, Statistical Department, Custom House, Calcutta. Price Re. 1.

The Volume of the Annual Statement of the Sea-borne Trade and Navigation, containing detailed statistics of the Foreign and Coasting Trade of Bengal, to go with the above, is also ready and can be obtained from the same source. Price Rs. 6.

The Calcutta Gazette.

PUBLISHED BY AUTHORITY.

WEDNESDAY, SEPTEMBER 17, 1902.

☞Separate paging is given to this Part in order that it may be filed as a separate compilation.

PART VI.

Bills introduced into the Council of the Governor General for making Laws and Regulations, or published under Rule 23.

GOVERNMENT OF INDIA.

LEGISLATIVE DEPARTMENT.

The following Bill was introduced in the Council of the Governor General of India for the purpose of making Laws and Regulations on the 5th September, 1902:

No. 9 OF 1902.

A Bill further to amend the Provident Funds Act, 1897.

WHEREAS it is expedient further to amend the Provident Funds Act, 1897; It is hereby enacted as follows:

1 of 1897.

1. This Act may be called the Provident Funds (Amendment) Act, 1902.

Short title.

2. For section 4 of the Provident Funds Act, 1897, the following section shall be substituted, namely:

of 1897.

Substitution of new section for section 4, Act IX, 1897.

"4. (*1*) Compulsory deposits in any Government or Railway Provident Fund shall not be liable to any attachment under any decree or order of a Court of Justice in respect of any debt or liability incurred by a subscriber to, or depositor in, any such Fund, and neither the Official Assignee nor a Receiver appointed under Chapter XX of the Code of Civil Procedure shall be entitled to, or have any claim on, such compulsory deposit.

XIV of 1882.

Protection to deposits and other sums in certain cases.

(*2*) Any sum standing to the credit of any subscriber to, or depositor in, any such Fund at the time of his decease and payable under the rules of the Fund or under this Act to the widow or the children, or partly to the widow and partly to the children, of the subscriber or depositor, or to such person as may be authorized by law to receive payment on her or their behalf, shall vest in the widow or the children, or partly in the widow and partly in the children, as the case may be, free from any debt or other liability incurred by the deceased, or incurred by the widow or by the children, or by any one or more of them, before the death of such subscriber or depositor.

"(*3*) Nothing in sub-section (*2*) shall apply in the case of any such subscriber or depositor as aforesaid dying before the day of 190 ."

STATEMENT OF OBJECTS AND REASONS.

THE present Bill has been framed to secure more completely to the widows and children of subscribers to, and depositors in, Government or Railway Provident Funds the protection intended to be given by the Provident Funds Act, 1897 (IX of 1897). As section 4 of that enactment is at present worded, the protection, which is limited to compulsory deposits, ceases at the death of the subscriber or depositor in so far as the funds standing to his credit form portion of his estate and are liable to be applied, in execution

6 *a*

of a decree or order or in the course of administration, to the satisfaction of his debts. Similarly, the exemption from attachment is confined to debts and liabilities incurred by him and does not extend to debts and liabilities to which the widow and children have been made parties during his lifetime. The substituted section now proposed is designed to remove the hardship arising in such cases by extending to any sum standing to the credit of a subscriber to, or depositor in, any such Fund at the time of his decease and payable under the rules of the Fund or the provisions of the Act to his widow or children protection from any debts or liabilities incurred by the deceased or by his widow or children during the life of the deceased.

The 2nd September, 1902. DENZIL IBBETSON.

J. M. MACPHERSON,
Secretary to the Government of India.

GOVERNMENT OF INDIA.

LEGISLATIVE DEPARTMENT.

The following Bill was introduced in the Council of the Governor General of India for the purpose of making Laws and Regulations on the 5th September, 1902:

NO. 10 OF 1902.

THE INDIAN WORKS OF DEFENCE BILL.

CONTENTS.

PART I.

PRELIMINARY.

SECTIONS.

1. Short title and extent.
2. Definitions.

PART II.

IMPOSITION OF RESTRICTIONS.

3. Declaration and notice that the restrictions will be imposed.
4. Powers exercisable after publication of notice under section 3, sub-section (*2*).
5. Restrictions.
6. Land to be marked out, measured, registered and mapped.
7. Notice to persons interested.
8. Power to require and enforce the making of statements as to names and interests.
9. Inquiry and award by Collector.

SECTIONS.

10. Award of Collector when to be final.
11. Adjournment of inquiry.
12. Power to summon and enforce attendance of witnesses and production of documents.
13. Matters to be considered and neglected.

PART III.

REFERENCE TO COURT AND PROCEDURE THEREON.

14. Reference to Court.
15. Collector's statement to the Court.
16. Service of notice.
17. Restriction on scope of proceedings.
18. Proceedings to be in open Court.
19. Matters to be considered in determining compensation.
20. Matters not to be considered in determining compensation.
21. Rules as to amount of compensation.
22. Form of awards.
23. Costs.
24. Collector may be directed to pay interest on excess compensation.

PART IV.

APPORTIONMENT OF COMPENSATION.

25. Particulars of apportionment to be specified.
26. Dispute as to apportionment.

PART V.

PAYMENT.

27. Payment of compensation or deposit of same in Court.

The Indian Works of Defence Bill.

(Part I.—Preliminary.—Sections 1-2.)

SECTIONS.

28. Investment of money deposited in respect of lands belonging to persons incompetent to alienate.
29. Investment of money deposited in other cases.
30. Payment of interest.

PART VI.

MISCELLANEOUS.

31. Service of notices.
32. Penalties.
33. Magistrate to enforce the terms of the Act.
34. Completion of imposition of restrictions not compulsory, but compensation to be awarded when not completed.
35. Demolition of part of house or building.
36. Exemption from stamp-duty and fees.
37. Notice in case of suits for anything done in pursuance of Act.
38. Code of Civil Procedure to apply to proceedings before Court.
39. Appeals in proceedings before Court.
40. Power to make rules.

A Bill to provide for imposing restrictions upon land in the vicinity of works of defence in order that such land may be kept free from buildings and other obstructions.

WHEREAS it is expedient to provide for imposing restrictions upon land in the vicinity of works of defence in order that such land may be kept free from buildings and other obstructions; It is hereby enacted as follows:

PART I.

PRELIMINARY.

Short title and extent.

1. (*1*) This Act may be called the Indian Works of Defence Act, 1902; and

(*2*) It extends to the whole of British India, including British Baluchistan, the Santal Parganas and the Pargana of Spiti.

Definitions.

2. In this Act, unless there is something repugnant in the subject or context,—

(*a*) the expression "land" includes benefits to arise out of land, and things attached to the earth or permanently fastened to anything attached to the earth:

(*b*) the expression "person interested" includes all persons claiming an interest in compensation to be made on account of the imposition of restrictions upon land under this Act; and a person shall be deemed to be interested in land if he is interested in an easement affecting the land:

(*c*) the expression "command" means one of the principal portions into which the Army of India is, for the time being, divided:

(*d*) the expression "General Officer of the Command" means the General Officer Commanding the Forces in a Command:

(*e*) the expression "Commanding Officer" means the officer for the time being in command of a work of defence:

(*f*) the expression "Collector" includes any officer specially appointed by the Local Government to perform the function of a Collector under this Act:

(*g*) the expression "Court" means a principal Civil Court of original jurisdiction, unless the Local Government has appointed (as it is hereby empowered to do) a special judicial officer within any specified local limits to perform the functions of the Court under this Act: and

(*h*) the following persons shall be deemed "entitled to act" as and to the extent hereinafter provided, that is to say,—

trustees for other persons beneficially interested shall be deemed the persons entitled to act with reference to any such case, and that to the same extent as the persons beneficially interested could have acted if free from disability:

a married woman, in cases to which the English law is applicable, shall be deemed the person so entitled to act, and, whether of full age or not, to the same extent as if she were unmarried and of full age: and

the guardians of minors and the committees or managers of lunatics or idiots shall be deemed respectively the persons so entitled to act, to the same extent as the minors, lunatics or idiots themselves, if free from disability, could have acted:

Provided that—

(*i*) no person shall be deemed "entitled to act" whose interest in the subject-matter is shown to the satisfaction of the Collector or Court to be adverse to the interest of the person interested for whom he would otherwise be entitled to act;

(*ii*) in every such case the person interested may appear by a next friend or, in default of his appearance by a next friend, the Collector or Court, as the case may be, shall appoint a guardian for the case to act on his behalf in the conduct thereof;

(*iii*) the provisions of Chapter XXXI of the Code of Civil Procedure shall, *mutatis mutandis*, apply in the case of persons interested appearing before a Collector or Court by a next friend, or by a guardian for the case, in proceedings under this Act; and XIV of

(*iv*) no person "entitled to act" shall be competent to receive the compensation-money payable to the person for whom he is entitled to act, unless he would

The Indian Works of Defence Bill.

(Part II.—Imposition of Restrictions.—Sections 3-5.)

have been competent to alienate the land upon which restrictions are to be imposed and receive and give a good discharge for the purchase-money on a voluntary sale.

PART II.

IMPOSITION OF RESTRICTIONS.

Declaration and notice that the restrictions will be imposed.

3. (*1*) Whenever it appears to the Local Government that it is necessary to impose restrictions upon land in the vicinity of any work of defence or of any site intended to be used or to be acquired for any such work in order that such land may be kept free from buildings and other obstructions, a declaration shall be made to that effect under the signature of a Secretary to such Government or of some officer duly authorized to certify its orders.

(*2*) The said declaration shall be published in the local official Gazette and shall state the district or other territorial division in which the land is situate and the place where a plan of the land, which shall be prepared on a scale not smaller than six inches to the mile and shall distinguish the boundaries referred to in section 5, may be inspected ; and the Collector shall cause public notice of the substance of the said declaration to be given at convenient places in the locality.

(*3*) The said declara ion shall be conclusive proof that it is necessary to keep the land free from buildings and other obstructions.

Powers exercisable after publication of notice under section 3, sub section (*2*).

4. (*1*) It shall be lawful for such officer as the Local Government may, by general or special order, authorize in this behalf, at any time after the expiration of fourteen days from the publication of the notice mentioned in section 3, sub-section (*2*), and from time to time to enter and demolish any buildings or other constructions on the surface, to cut down or grub up all or any of the trees, to remove or alter all or any of the banks, fences, hedges and ditches, to make underground and other drains, to fill up all excavations, and demolish all buildings and other constructions, below the surface, and generally to level and clear the said land and do all such acts for levelling and clearing the same as he may deem necessary or proper, but in such manner nevertheless that evidence of the boundaries of the lands held by different owners may be preserved.

(*2*) Save as hereinafter excepted by sub-section (*3*), the powers conferred by sub-section (*1*) shall not be exercised after the expiry of the period of six months from the date of the publication of the notice aforesaid or of any shorter period at the expiry of which the officer exercising such powers gives notice to the Collector that there will be no further exercise of the same.

(*3*) Nothing in sub-section (*2*) shall be deemed to preclude any such officer from exercising the said powers for the purpose of removing, wholly or in part, any building or other obstruction maintained, created, added to, altered, planted, stacked, stored or otherwise accumulated in contravention of this Act or of any rule or order made thereunder or of any condition prescribed in accordance therewith.

Restrictions.

5. From and after the publication of the notice mentioned in section 3, sub-section (*2*), such of the following restrictions as the Local Government may in its discretion declare therein shall attach with reference to such land, namely :

(*a*) Within an outer boundary which, except so far as is otherwise provided in section 35, sub-section (*4*), may extend to a distance of two thousand yards from the crest of the outer parapet of the work,—

(*i*) no variation shall be made in the ground-level, and no building, wall, bank or other construction above the ground shall be maintained, erected, added to or altered otherwise than with the written approval of the General Officer of the Command and the Director General of Military Works, and on such conditions as they may prescribe ;

(*ii*) no wood, earth, stone, brick, gravel, sand or other material shall be stacked, stored or otherwise accumulated :

Provided that, with the written approval of the General Officer Commanding the District and on such conditions as he may prescribe, manure and agricultural produce may be exempted from the prohibition.

Provided, also, that any person having control of the land as owner, lessee or occupier shall be bound forthwith to remove such manure or agricultural produce, without compensation, on the requisition of the Commanding Officer ;

(*iii*) no surveying operation shall be conducted otherwise than by or under the personal supervision of a public servant duly authorised in this behalf by the Collector with the concurrence of the Commanding Officer ; and

(*iv*) where any building, wall, bank or other construction above the ground has been permitted under clause (*i*) of this sub-section to be maintained, erected, added to or altered, repairs shall not, without the written approval of the General Officer of the Command, be made with materials different in kind from those employed in the original building, wall, bank or other construction.

(*b*) Within a second boundary which may extend to a distance of one thousand yards from the crest of the outer parapet of the work, the restrictions enumerated in sub-section (*1*) shall apply with the following additional limitations, namely :

(*i*) no building, wall, bank or other construction of permanent materials above the ground shall be maintained or erected :

Provided that, with the written approval of the General Officer of the Command and the Director General of Military Works and on such conditions as they may prescribe, huts, fences and other constructions of wood or other materials, easily destroyed or removed, may be maintained, erected, added to or altered :

The Indian Works of Defence Bill.

(Part II.—Imposition of Restrictions.—Sections 6-11.)

Provided, also, that any person having control of the land as owner, lessee or occupier shall be bound forthwith to destroy or remove such huts, fences or other constructions, without compensation, upon an order in writing signed by the General Officer Commanding the District; and

(*ii*) live hedges, rows or clumps of trees or orchards shall not be maintained, planted, added to or altered otherwise than with the written approval of the General Officer of the Command and of the Director General of Military Works and on such conditions as they may prescribe.

(*c*) Within a third boundary which may extend to a distance of five hundred yards from the crest of the outer parapet of the work, the restrictions enumerated in sub-sections (*1*) and (*2*) shall apply with the following additional limitation, namely:

no building or other construction on the surface, and no excavation, building or other construction below the surface, shall be maintained or erected:

Provided that, with the written approval of the Commanding Officer and on such conditions as he may prescribe, open railings and dry brush-wood fences may be exempted from this prohibition.

Land to be marked out, measured registered and mapped.

6. As soon as may be after the publication of the declaration aforesaid, the Collector shall cause the land to be marked out and measured, and shall also prepare a register and a map on a scale not smaller than six inches to the mile, showing accurately every building, tree or other obstruction.

Notice to persons interested.

7. (*1*) On the expiry of the period of six months or on the prior receipt of the notice (if any) given to the Collector under section 4, sub-section (*2*), the Collector shall cause public notice to be given at convenient places on or near the land, stating the effect of the said declaration and that claims to compensation for all interests in such land affected by anything done or ordered in pursuance of such declaration may be made to him.

(*2*) Such notice shall state the particulars of any restrictions attaching to the land, and shall require all persons interested in the land to appear personally or by agent before the Collector at a time and place therein mentioned (such time not being earlier than fifteen days after the date of publication of the notice), and to state the nature of their respective interests in the land and the amount and particulars of their claims to compensation for damage to such interests and their objections (if any) to the measurements made under section 6. The Collector may in any case require such statement to be made in writing and signed by the party or his agent.

(*3*) The Collector shall also serve notice to the same effect on the occupier (if any) of such land and on all such persons known or believed to be interested therein, or to be entitled to act for persons so interested, as reside or have agents authorised to receive service on their behalf, within the revenue-district in which the land is situate.

(*4*) In case any person so interested resides elsewhere, and has no such agent, the notice shall be sent to him by post in a letter addressed to him at his last known residence, address or place of business and registered under the Indian Post Office Act, 1898. VI of 1898

Power to require and enforce the making of statements as to names and interests.

8. (*1*) The Collector may also require any such person to make or deliver to him, at a time and place mentioned (such time not being earlier than fifteen days after the date of the requisition), a statement containing, so far as may be practicable, the name of every other person possessing any interest in the land or any part thereof as co-proprietor, sub-proprietor, mortgagee, tenant or otherwise, and of the nature of such interest, and of the rents and profits (if any) received or receivable on account thereof for three years next preceding the date of the statement.

(*2*) Every person required to make or deliver a statement under this section or section 9 shall be deemed to be legally bound to do so within the meaning of sections 175 and 176 of the Indian Penal Code. XLV of 1860

Inquiry and award by Collector.

9. On the day so fixed, or on any other day to which the inquiry has been adjourned, the Collector shall proceed to inquire into the objections (if any) which any person interested has stated pursuant to a notice given under section 7 to the measurements made under section 6, and into the value of the land, and into the respective interests of the persons claiming the compensation, and shall make an award under his hand of—

(*a*) the true area of the land and the nature of the obstructions from which the land is to be kept free;

(*b*) the compensation which in his opinion should be allowed for any damage caused under section 4 and of any restrictions imposed under section 5; and

(*c*) the apportionment of the said compensation among all the persons known or believed to be interested in the land, of whom or of whose claims he has information, whether they have respectively appeared before him or not.

Award of Collector when to be final.

10. (*1*) Such award shall be filed in the Collector's office and shall, except as hereinafter provided, be final and conclusive evidence, as between the Collector and the persons interested, whether they have respectively appeared before the Collector or not, of the true area of the land, the nature of the said obstructions, the value of the rights restricted, and the apportionment of the compensation among the persons interested.

(*2*) The Collector shall give immediate notice of his award to such of the persons interested as are not present personally or by their representatives when the award is made.

Adjournment of inquiry.

11. The Collector may, for any cause he thinks fit, from time to time adjourn the inquiry to a day to be fixed by him.

The Indian Works of Defence Bill.

(Part II.—Imposition of Restrictions.—Sections 12-13. Part III.—Reference to Court and Procedure thereon.—Sections 14-20)

Power to summon and enforce attendance of witnesses and production of documents.

12. For the purpose of inquiries under this Act the Collector shall have power to summon and enforce the attendance of witnesses, including the parties interested or any of them, and to compel the production of documents, by the same means, and (so far as may be) in the same manner, as is provided in the case of a Civil Court under the Code of Civil Procedure. XIV of 1882.

Matters to be considered and neglected.

13 In determining the amount of compensation, the Collector shall be guided by the provisions contained in sections 19 and 20.

PART III.

REFERENCE TO COURT AND PROCEDURE THEREON.

Reference to Court.

14. (*1*) Any person interested who has not accepted the award may, by written application to the Collector, require that the matter be referred by the Collector for the determination of the Court, whether his objection be to the measurement of the land, the amount of the compensation, the persons to whom it is payable, or the apportionment of the compensation among the persons interested.

(*2*) The application shall state the grounds on which objection to the award is taken:

Provided that every such application shall be made,—

(*a*) if the person making it was present or represented before the Collector at the time when he made his award, within six weeks from the date of the Collector's award;

(*b*) in other cases, within six weeks of the receipt of the notice from the Collector under section 10, sub-section (*2*), or within six months from the date of the Collector's award, whichever period shall first expire.

Collector's statement to the Court.

15. (*1*) In making the reference the Collector shall state, for the information of the Court, in writing under his hand,—

(*a*) the situation and extent of the land with particulars of any damage caused under section 4 or of restrictions imposed under section 5;

(*b*) the names of the persons whom he has reason to think interested in such land;

(*c*) the amount of compensation awarded under section 9; and,

(*d*) if the objection be to the amount of the compensation, the grounds on which the amount of compensation was determined.

(*2*) To the said statement shall be attached a schedule giving the particulars of the notices served upon, and of the statements in writing made or delivered by, the parties interested respectively.

Service of notice.

16. The Court shall thereupon cause a notice specifying the day on which the Court will proceed to determine the objection, and directing their appearance before the Court on that day, to be served on the following persons, namely:

(*a*) the applicant;

(*b*) all persons interested in the objection, except such (if any) of them as have consented without protest to receive payment of the compensation awarded; and,

(*c*) if the objection is in regard to the area of the land, the nature of the obstructions or the amount of the compensation, the Collector.

Restriction on scope of proceedings.

17. The scope of the inquiry in every such proceeding shall be restricted to a consideration of the interests of the persons affected by the objection.

Proceedings to be in open Court.

18. Every such proceeding shall take place in open Court, and all persons entitled to practise in any Civil Court in the Province shall be entitled to appear, plead and act, as the case may be, in such proceeding.

Matters to be considered in determining compensation.

19. (*1*) In determining the amount of compensation to be awarded for damage caused or for restrictions imposed under this Act, the Court shall take into consideration—

(*a*) the actual decrease in market-value of the land from the date of the publication of the declaration relating thereto under section 3;

(*b*) the damage sustained by the person interested, by reason of the removal of any standing crops or trees in the exercise of any power conferred by section 4;

(*c*) the damage (if any) sustained by the person intested, by reason of ceasing to be able to use such land conjointly with his other land;

(*d*) the damage (if any) sustained by the person interested by anything done or ordered under sections 4 and 5 injuriously affecting his other property, moveable or immoveable, in any other manner, or his earnings; and,

(*e*) if, in consequence of the imposition of restrictions, the person interested is compelled to change his residence or place of business, the reasonable expenses (if any) incidental to such change.

(*2*) In addition to the amount representing the actual decrease in the market-value of the land as above provided, the Court shall in every case award a further sum of fifteen per centum on such amount.

Matters not to be considered in determining compensation.

20. In determining the amount of compensation to be awarded for damage caused or for restrictions imposed under this Act, the Court shall not take into consideration—

(*a*) the degree of urgency which has led to the damage or the imposition of restrictions;

(*b*) any disinclination of the person interested to submit to damage or restrictions;

(*c*) any damage sustained by him, which, if caused by a private person, would not render such person liable to a suit,

The Indian Works of Defence Bill.

(Part III.—Reference to Court and Procedure thereon.—Sections 21-24. Part IV.—Apportionment of Compensation.—Sections 25 26. Part V.—Payment.—Sections 27-28.)

(*d*) any increase to the value of the land or of the other land of the person interested, accruing or likely to accrue from anything done under this Act; or

(*e*) any outlay or improvements on, or disposal of, the land acquired, commenced, made or effected without the sanction of the Collector after the date of the publication of the declaration under section 3.

Rules as to amount of compensation.

21. (*1*) When the applicant has made a claim to compensation, pursuant to any notice given under section 7, the amount awarded to him by the Court shall not exceed the amount so claimed or be less than the amount awarded by the Collector under section 9.

(*2*) When the applicant has refused to make such claim or has omitted without sufficient reason (to be allowed by the Judge) to make such claim, the amount awarded by the Court shall in no case exceed the amount awarded by the Collector.

(*3*) When the applicant has omitted for a sufficient reason (to be allowed by the Judge) to make such claim, the amount awarded to him by the Court shall not be less than, and may exceed, the amount awarded by the Collector.

Form of awards.

22. Every award under this Part shall be in writing signed by the Judge and shall specify the amount awarded under section 19, sub-section (*1*), clause (*a*), and also the amounts (if any) respectively awarded under each of the other clauses of the same sub-section, together with the grounds of awarding each of the said amounts.

Costs.

23. (*1*) Every such award shall also state the amount of costs incurred in the proceedings under this Part, and by what persons and in what proportion they are to be paid.

(*2*) When the award of the Collector is not upheld, the costs shall ordinarily be paid by the Collector, unless the Court is of opinion that the claim of the applicant was so extravagant or that he was so negligent in putting his case before the Collector that some deduction from his costs should be made or that he should pay a part of the Collector's costs.

Collector may be directed to pay interest on excess compensation.

24. If the sum which, in the opinion of the Court, the Collector ought to have awarded as compensation is in excess of the sum which the Collector did award as compensation, the Court may direct that the Collector shall pay interest on such excess at the rate of six per centum per annum from the date of his award to the date of payment of such excess into Court.

PART IV.

APPORTIONMENT OF COMPENSATION.

Particulars of apportionment to be specified.

25. Where there are several persons interested, if such persons agree in the apportionment of the compensation, the particulars of such apportionment shall be specified in the award, and as between such persons the award shall be conclusive evidence of the correctness of the apportionment.

Dispute as to apportionment.

26. When the amount of compensation has been settled under section 9, if any dispute arises as to the apportionment of the same or any part thereof, or as to the persons to whom the same or any part thereof is payable, the Collector may refer such dispute to the decision of the Court.

PART V.

PAYMENT.

Payment of compensation or deposit of same in Court.

27. (*1*) On making an award under section 9, the Collector shall tender payment of the compensation awarded by him to the persons interested entitled thereto according to the award, and shall pay it to them unless prevented by some one or more of the contingencies mentioned in sub-section (*2*).

(*2*) If they do not consent to receive it, or if there is no person competent to alienate the land, or if there is any dispute as to the title to receive the compensation or as to the apportionment of it, the Collector shall deposit the amount of the compensation in the Court to which a reference under section 14 would be submitted:

Provided, first, that any person admitted to be interested may receive such payment under protest as to the sufficiency of the amount:

Provided, secondly, that no person who has received the amount otherwise than under protest shall be entitled to make any application under section 14:

Provided, thirdly, that nothing herein contained shall affect the liability of any person, who may receive the whole or any part of any compensation awarded under this Act, to pay the same to the person lawfully entitled thereto.

(*3*) Notwithstanding anything in this section, the Collector may, with the sanction of the Local Government, instead of awarding a money-compensation in respect of any land, make any arrangement with a person having a limited interest in such land, either by the grant of other lands in exchange, the remission of land-revenue on the same or on other lands held under the same title, or in such other way as may be equitable having regard to the interests of the parties concerned.

(*4*) Nothing in sub-section (*3*) shall be construed to interfere with or limit the power of the Collector to enter into any arrangement with any person interested in the land and competent to contract in respect thereof.

Investment of money deposited in respect of lands belonging to persons incompetent to alienate.

28 (*1*) If any money is deposited in Court under section 27, sub-section (*2*), and it appears that the land in respect of which the same was awarded belonged to any person who had no power to alienate the same, the Court shall—

(*a*) order the money to be invested in the purchase of other lands to be held under the like title and conditions of ownership as the land in respect of which such money was deposited is held, or,

The Indian Works of Defence Bill.

(Part V.—Payment.—Sections 29-30. Part VI.—Miscellaneous.—Sections 31-34.)

(*b*) if such purchase cannot be effected forthwith, then in such Government or other approved securities as it thinks fit;

and shall direct the payment of the interest or other proceeds arising from such investment to the person or persons who would for the time being have been entitled to the possession of the said land, and such moneys shall remain so deposited and invested until the same are applied—

(*i*) in the purchase of such other lands as aforesaid; or

(*ii*) in payment to any person or persons becoming absolutely entitled thereto

(*2*) In all cases of moneys deposited to which this section applies, the Court shall order the cost of the following matters, including therein all reasonable charges and expenses incident thereto, to be paid by the Collector, namely:

(*a*) the costs of such investments as aforesaid;

(*b*) the costs of the orders for the payment of the interest or other proceeds of the securities upon which such moneys are for the time being invested, and for the payment out of Court of the principal of such moneys and of all proceedings relating thereto, except such as may be occasioned by litigation between adverse claimants.

Investment of money deposited in other cases.

29. If any money is deposited in Court under this Act for any cause other than that mentioned in section 28, the Court may, on the application of any party interested or claiming an interest in such money, order the same to be invested in such Government or other approved securities as it thinks fit, and may direct the interest or other proceeds of any such investment to be accumulated and paid in such manner as will, in its opinion, give the parties interested therein the same benefit therefrom as they might have had from the land in respect of which such money was deposited or as near thereto as may be.

Payment of interest.

30. When the amount of such compensation is not paid or deposited within seven days of making the award, the Collector shall pay the amount awarded with interest thereon at the rate of six per centum per annum from the date of the award until it is so paid or deposited.

PART VI.

MISCELLANEOUS.

Service of notices.

31. (*1*) Service of any notice under this Act shall be made by delivering or tendering a copy thereof signed, in the case of a notice under section 3, sub-section (*2*), by the officer therein mentioned, and, in the case of any other notice, by or by order of the Collector or the Judge.

(*2*) Whenever it may be practicable, the service of the notice shall be made on the person therein named.

(*3*) When such person cannot be found, the service may be made on any adult male member of his family residing with him; and, if no such adult male member can be found, the notice may be served by fixing the copy on the outer door of the house in which the person therein named ordinarily dwells or carries on business, or by fixing a copy thereof in some conspicuous place in the office of the officer aforesaid or of the Collector or in the court-house and also in some conspicuous part of the land upon which restrictions are to be imposed:

Provided that, if the Collector or Judge so directs, a notice may be sent by post in a letter addressed to the person named therein at his last known residence, address or place of business and registered under the Indian Post Office Act, 1898, and service of it may be proved by the production of the addressee's receipt. VI of 1898.

Penalties.

32. Whoever wilfully—

(*a*) obstructs any person in doing any of the acts authorised by section 4 or section 6, or

(*b*) destroys, damages, alters or otherwise interferes with the ground-level or any work done under section 4, or

(*c*) contravenes any of the provisions of section 5 or any condition prescribed thereunder,

shall be punishable with imprisonment for a term which may extend to one month, or with fine which may extend to fifty rupees, or with both, and, in the case of a continuing offence, with an additional fine which may extend to five rupees for every day after the first in regard to which he is convicted of having persisted in the offence; and any expenses incurred in removing the effects of his offence may be recovered from him in the manner provided by the law for the time being in force for the recovery of fines.

Magistrate to enforce the terms of the Act.

33. If the Collector or officer authorized under section 4 is opposed or impeded in doing anything directed or permitted by this Act, he shall, if a Magistrate, enforce compliance, and, if not a Magistrate, he shall apply to a Magistrate or (within the towns of Calcutta, Madras and Bombay) to the Commissioner of Police, and such Magistrate or Commissioner (as the case may be) shall enforce compliance.

Completion of imposition of restrictions not compulsory, but compensation to be awarded when not completed.

34. (*1*) The Government shall be at liberty to withdraw from the imposition of any declared restrictions before any of the measures authorized by section 4 have been taken.

(*2*) Whenever the Government withdraws the imposition of any declared restrictions, the Collector shall determine the amount of compensation due for the damage suffered by the owner in consequence of the notice or of any proceedings thereunder, and shall pay such amount to the person interested, together with all costs reasonably incurred by him in the prosecution of the proceedings under this Act relating to the said restrictions.

(*3*) The provisions of Part III shall apply, so far as may be, to the determination of the compensation payable under this section.

The Indian Works of Defence Bill.

(Part VI.—Miscellaneous.—Sections 35-40.)

35. (*1*) The provisions of this Act shall not be put in force for the purpose of demolishing or acquiring the right to demolish a part only of any house, manufactory or other building, if the owner desires that the whole of such house, manufactory or building shall be demolished or that the right to demolish the whole of it shall be acquired :

Demolition of part of house or building

Provided that the owner may at any time before the Collector has made his award under section 9, by notice in writing, withdraw or modify his expressed desire that the whole of such house, manufactory or building shall be demolished or that the right to demolish the whole of it shall be acquired :

Provided, also, that, if any question shall arise as to whether any building or other construction proposed to be demolished under this Act does or does not form part of a house, manufactory or building within the meaning of this section, the Collector shall refer the determination of such question to the Court and shall not demolish such building or other construction until after the question has been determined.

In deciding on such a reference the Court shall have regard to the question whether the building or other construction proposed to be demolished is reasonably required for the full and unimpaired use of the house, manufactory or building.

(*2*) If, in the case of any claim under section 19, sub-section (*1*) clause (*c*), by a person interested, on account of ceasing to be able to use the land, upon which restrictions are to be imposed, conjointly with his other land, the Local Government is of opinion that the claim is unreasonable or excessive, it may, at any time before the Collector has made his award, order the imposition of restrictions upon the whole of the land of which the land upon which it was first sought to impose restrictions forms a part.

(*3*) In the case provided for by sub-section (*2*) no fresh declaration or other proceeding under sections 3 to 8 shall be necessary ; but the Collector shall without delay furnish a copy of the order of the Local Government to the person interested, and shall thereafter proceed to make his award under section 9.

(*4*) Notwithstanding anything contained in section 5, clause (*a*), any land, upon which restrictions are imposed under this section may be included in the outer boundary, even though its distance from the crest of the outer parapet of the work exceeds two thousand yards.

36. No award or agreement made under this Act shall be chargeable with stamp-duty, and no person claiming under any such award or agreement shall be liable to pay any fee for a copy of the same.

Exemption from stamp-duty and fees.

37. No suit or other proceeding shall be commenced or prosecuted against any person for any thing done in pursuance of this Act, without giving to such person a month's previous notice in writing of the intended proceeding, and of the cause thereof, nor after tender of sufficient amends.

Notice in case of suits for anything done in pursuance of Act.

38. Save in so far as they may be inconsistent with anything contained in this Act, the provisions of the Code of Civil Procedure shall apply to all proceedings before the Court under this Act.

Code of Civil Procedure to apply to proceedings before Court.

XIV of 1882.

39. Subject to the provisions of the Code of Civil Procedure applicable to appeals from original decrees, an appeal shall lie to the High Court from the award or from any part of the award of the Court in any proceeding under this Act.

Appeals in proceedings before Court.

XIV of 1882.

40. (*1*) The Governor General in Council and the Local Government, with the previous sanction of the Governor General in Council, may make rules for the guidance of officers in all matters connected with the enforcement of this Act.

Power to make rules.

(*2*) The power to make rules under sub-section (*1*) shall be subject to the condition of the rules being made after previous publication.

(*3*) All rules made under sub-section (*1*) shall be published in the local official Gazette and shall thereupon have effect as if enacted in this Act.

STATEMENT OF OBJECTS AND REASONS.

THE object of the present Bill is to enable the Government to maintain, clear of buildings and obstructions, such zones of fire in the vicinity of works of defence as are essential to their defensive value under the conditions of modern warfare and in view, more especially, of the increasing range of firearms. The necessity for measures of this nature has long been recognized by the legislatures of most European countries ; and in the United Kingdom very extensive powers have been vested in the Government by the Works of Defence Act, 1860 (23 & 24 Vict., c. 112). In British India the absence of a similar enactment has, of late, been productive of serious difficulty, particularly where the land in the neighbourhood of bridge-heads and redoubts in or near cities has become valuable

for building-sites. It has been proved that the Government cannot effect complete or permanent arrangements for restraining the erection of buildings without recourse to out-and-out purchase under the provisions of the Land Acquisition Act, 1894 (I of 1894), which, in view of the object contemplated, involves a disproportionate expenditure of public money and an excessive interference with private property. In these circumstances, it is proposed to provide, on the principle adopted in France, for the establishment, round works of defence, of concentric zones in which restrictions of varying stringency may be imposed ; and for this purpose the English statute has been closely followed in regard to the procedure for the issue of notifications and the exercise of rights of demolition, subject, however, to the important concession that the period within which all acts in pursuance of such rights must be completed have been reduced from three years to six months. In the matter of the award of compensation, the provisions of the Land Acquisition Act, 1894, have been adapted on the principle that, as the sites of works of defence must ordinarily be acquired in conformity with that enactment, the imposition of restrictions upon adjoining property should be subject to equally stringent safeguards in the interests of landowners.

The 29th August 1902. E. R. ELLES.

J. M. MACPHERSON,
Secretary to the Government of India.

APPENDIX TO

The Calcutta Gazette.

WEDNESDAY, SEPTEMBER 17, 1902.

NOTICES TO MARINERS.

GOVERNMENT OF BENGAL—MARINE DEPARTMENT.

NOTICE TO MARINERS—No. 262

[First Publication.]

CHINA SEA—CARIMATA STRAIT.

Serutu island—Light established.

WITH reference to Notice to Mariners No. 93, dated the 12th April 1902, issued by this office, the British Admiralty has given further notice (No. 502 of 1902) that telegraphic information just received states that the 3rd order *white flashing* light *every five seconds*, elevated 574 feet above high water, and said to be visible in clear weather from a distance of 30 miles, has been established on an iron framework tower, painted white, erected upon a hill near the western point of Serutu island, northern entrance to Carimata strait.

Approximate position, lat. 1° 43′ S., long. 108° 41½′ E.

This Notice affects the following Admiralty Charts:—Eastern Archipelago, No. 941a, Carimata strait, No. 2160: Also, List of Lights, part VI, 1902, page 102; and China Sea Directory, vol. I, 1896, page 484.

E. J. BEAUMONT, COMDR., R.I M.,
Port Officer of Calcutta.

Published for general information.

C. B. BAYLEY,
Asst. Secy., Marine Department.

CALCUTTA, *the 13th September 1902.*

GOVERNMENT OF BENGAL—MARINE DEPARTMENT.

NOTICE TO MARINERS—No 263.

[First Publication.]

JAPAN—INLAND SEA—OSAKA ROAD.

Aji Kawa Guchi—Wreck.

THE British Admiralty has given notice (No. 509 of 1902) that the wreck of a sailing vessel with two masts standing about 15 feet above water lies sunk in Osaka road in a position with Tempozan lighthouse bearing N. 79° E., distant 2$\frac{4}{10}$ miles, and Sakai harbour light S. 38° E.

Approximate position, lat. 34° 39′ N., long. 135° 22½′ E.

(*Variation 4° Westerly in 1902.*)

This Notice affects the following Admiralty Charts:—Approaches to Kobe, No. 2680, Kobe and Osaka, No. 16: Also, China Sea Directory, vol. IV, 1894, page 353.

E. J. BEAUMONT, COMDR., R.I.M.,
Port Officer of Calcutta.

Published for general information.

C. B. BAYLEY,
Asst. Secy., Marine Department.

CALCUTTA, *the 13th September 1902.*

GOVERNMENT OF BENGAL—MARINE DEPARTMENT.

NOTICE TO MARINERS—No. 264.

[First Publication.]

JAPAN—KIUSIU, WEST COAST.

Goto islands—Rocks in the vicinity of Ojika Shima.

THE British Admiralty has given notice (No. 510 of 1902) of the existence of the undermentioned rocks in the vicinity of Ojika shima, Goto islands:—

a. A rock with a depth of one fathom over it, in lat. 33° 11′ 40″ N., long. 129° 5′ 30″ E.

There is a rock named Okino kazikaki, with a depth of 1½ fathoms over it, situated about 2 cables to the northward of the above.

b. A rock with a depth of 2 fathoms over it, in lat. 33° 12′ N., long. 129° 0′ E.

This Notice affects the following Admiralty Charts:—Nagasaki to Karatsu, No. 359: Also, China Sea Directory, vol. IV, 1894, page 446.

E. J. BEAUMONT, COMDR., R.I.M.,
Port Officer of Calcutta.

Published for general information.

C. B. BAYLEY,
CALCUTTA, *the 13th September 1902.* *Asst. Secy., Marine Department.*

GOVERNMENT OF BENGAL—MARINE DEPARTMENT.

NOTICE TO MARINERS—No. 265.

[First Publication.]

JAPAN—INLAND SEA—HARIMA NADA.

Sakoshi bay—Okayama port—Rocks and shoals.

THE British Admiralty has given notice (No. 511 of 1902) of the existence of the following rocks in the undermentioned positions in Harima nada—

SAKOSHI BAY—

A rock, with a depth of 3 fathoms over it, situated with the eastern extremity of Ikisima bearing N. 6° E., distant 8 cables, and northern extremity of Kazura sima S. 83° E.

Approximate position, lat. 34° 45′ N., long. 134° 26′ E.

This rock is on the extremity of a ledge, with a depth of 3 fathoms over it extending from the northern point of Otomari bay.

A rock, named Toinosowai, with a depth of 3¾ fathoms over it, situated with the south-eastern point of Utabo sima bearing S. 78° W., distant 3¼ cables, and the north-eastern point of the same island N. 65° W.

Approximate position, lat. 34° 41′ N., long. 134° 18′ E.

OKAYAMA PORT—

(1) A depth of 3¾ fathoms, sand and mud, has been found on the bank in the eastern approach to Okayama, situated with Kome saki bearing N 35° W., distant $1\frac{9}{10}$ miles, and northern extremity of Oko sima hana, the first point southward of Oko sima, N. 82° W.

(2) A shoal, with a depth of 4¾ fathoms, situated with Ishikiri point bearing N. 42° W., distant 12 cables, and south extremity of Oko sima hana S. 61° W. There is a depth of 5 fathoms three-quarters of a cable N. 31° W. from the above shoal.

(3) A shoal, with a depth of 3 fathoms over it, situated with Ishikiri point bearing N. 19° W., distant 11 cables, and southern extremity of Oko sima hana S. 57° W.

(4) A shoal, with a depth of 3 fathoms over it, situated with Kome saki bearing S. 22° W., distant 5¼ cables, and Kanga ishi Yama S. 78° W.

(5) Aiga she rock, situated 9 cables N. 8° E. from Kome saki, has a depth over it of about 5 feet.

Approximate position, lat. 34° 35′ N., long. 134° 2¾′ E.

To the westward of lines connecting shoals mentioned in 3, 4, 5, there are depths of less than 3 fathoms.

PORT WUSIMADO—

A shoal, with a depth over it of from 1½ to 3 fathoms, extends from a position with Naka-no-ko sima bearing S. 62° E, distant 6¼ cables, to a position with the same island bearing N. 80° E, distant 7 cables.

Approximate position, Naka-no-ko sima, lat. 34° 36′ N., long. 134° 9′ E.

(*Variation 4° Westerly in 1902.*)

This Notice affects the following Admiralty Charts:—Harima nada, No. 137; Harbours and Anchorages, Harima nada, No. 694. Also, China Sea Directory, vol. IV, 1894, pages 370, 371, 374.

E. J. BEAUMONT, COMDR, R.I.M.,
Port Officer of Calcutta.

Published for general information.

C. B. BAYLEY,
CALCUTTA, *the 13th September 1902.* *Asst. Secy., Marine Department.*

GOVERNMENT OF BENGAL—MARINE DEPARTMENT.

NOTICE TO MARINERS—No. 266.

[First Publication.]

JAPAN—KIUSIU, WEST COAST.

Hirado sima—Particulars of Betto se, a pinnacle rock.

THE British Admiralty has given notice (No. 516 of 1902) of the existence of a small pinnacle rock, named Betto se, with a depth of 4¾ fathoms over it, off the west coast of Hirado sima. It is situated with Tateba sima bearing S. 43° E., distant 13½ cables, and Tobu saki in line with Nakai no sima N. 47° E.

Approximate position, lat. 33° 18¼′ N., long. 129° 23¾′ E.

There are depths of 18 and 23 fathoms around this rock.

(*Variation 4° Westerly in 1902.*)

This Notice affects the following Admiralty Charts:—Western coasts of Kiusiu and Nipon, No. 358; Nagasaki to Karatsu, No. 359; Hirado island, &c., No. 140. Also, China Sea Directory, vol. IV, 1894, page 515; and Supplement, 1898, page 30.

E. J. BEAUMONT, COMDR., R.I.M.,
Port Officer of Calcutta.

Published for general information.

C. B. BAYLEY,
CALCUTTA, *the 13th September 1902.* *Asst. Secy., Marine Department.*

GOVERNMENT OF BENGAL—MARINE DEPARTMENT.

NOTICE TO MARINERS—No. 267.

[First Publication.]

BAY OF BENGAL—COROMANDEL COAST.

Negapatam roadstead—Submerged danger marked "Wreck."

THE Presidency Port Officer, Madras, has given notice (No. 43 of 1902) that a green buoy with the word "Wreck" in white letters has been placed to mark a submerged danger lying 8 feet above bottom and 5 feet in diameter in 25 feet low water, ordinary spring tides, with the following bearings:—

Negapatam Lighthouse	...	... N. 77° W. cor. mag.
South Port Limit obelisk	...	... S. 63° W. „
North Port Limit obelisk	...	... N. 60° W. „
Nagore Mosque	...	... N. 28° W. „

E. J. BEAUMONT, COMDR., R.I.M.,
Port Officer of Calcutta.

Published for general information.

C. B. BAYLEY,
CALCUTTA, *the 15th September 1902.* *Asst. Secy, Marine Department.*

GOVERNMENT OF BENGAL—MARINE DEPARTMENT.

NOTICE TO MARINERS—No. 268.

[First Publication.]

INDIA, SOUTH-EAST—COROMANDEL COAST.

Negapatam—The buoy marking the wreck of the brig has been replaced.

THE Presidency Port Officer, Madras, has given notice (No. 49 of 1902) that the wreck buoy in 3½ fathoms with the lighthouse bearing W. ¾ N. has been replaced, as a recent search shows that a portion of the wreck of the brig still remains.

E. J. BEAUMONT, COMDR., R.I.M.,
Port Officer of Calcutta.

Published for general information.

C. B. BAYLEY,
CALCUTTA, *the 15th September 1902.* *Asst. Secy., Marine Department.*

GOVERNMENT OF BENGAL—MARINE DEPARTMENT.

NOTICE TO MARINERS—No. 269.

[First Publication.]

INDIA, EAST—MADRAS COAST.

Vizagapatam light.

WITH reference to Notice to Mariners No. 247, dated 18th August last, issued by this office, the Presidency Port Officer, Madras, has given further notice (No. 50 of 1902) as follows:—

For "*Port Office*" read "*Port Flagstaff.*"

E. J. BEAUMONT, COMDR., R.I.M.,
Port Officer of Calcutta.

Published for general information.

C. B. BAYLEY,
CALCUTTA, *the 15th September 1902.* *Asst. Secy., Marine Department.*

GOVERNMENT OF BENGAL—MARINE DEPARTMENT.

NOTICE TO MARINERS—No. 270.

[First Publication.]

INDIA, SOUTH-EAST—CEYLON COAST.

Chuttram—Date of exhibition of light.

WITH reference to Notice to Mariners No. 194, dated the 30th June, and No. 248, dated the 13th August 1902, issued by this office, the Presidency Port Officer, Madras, has given further notice (No. 52 of 1902) that the light referred to was duly exhibited on 1st September 1902.

E. J. BEAUMONT, COMDR., R.I.M.,
Port Officer of Calcutta.

Published for general information.

C. B. BAYLEY,
CALCUTTA, *the 15th September 1902.* *Asst. Secy., Marine Department.*

GOVERNMENT OF BENGAL—MARINE DEPARTMENT.

NOTICE TO MARINERS—No. 271.

[First Publication.]

AUSTRALIA—WIDE BAY BAR.

Hook point—The square beacons kept open.

THE Port Master, Brisbane, has given notice (No. 7 of 1902) that as the Southern Spit is gradually working to the northward, the square beacons on Hook Point for crossing the bar must now be kept open once their own width to the northward. This will lead well clear of the spit, with a depth of 17 feet L.W.O.S.T.

Charts affected—Nos. 1030 and 1068; Australian Directory, vol. No. 2.

E. J. BEAUMONT, COMDR., R.I.M.,
Port Officer of Calcutta.

Published for general information.

C. B. BAYLEY,
CALCUTTA, *the 15th September 1902.* *Asst. Secy., Marine Department.*

GOVERNMENT OF BENGAL—MARINE DEPARTMENT.

NOTICE TO MARINERS—No. 272.

[First Publication.]

AUSTRALIA—SPENCER GULF.

Port Pirie approach—An occulting light exhibited.

WITH reference to Notice to Mariners No. 233, dated 28th July 1902, issued by this office, the President, Marine Board, Port Adelaide, has given further notice (No. 12 of 1902), informing Masters of vessels, Pilots and others that an occulting light, visible about six miles, is now exhibited from a beacon erected on the north end of Eastern Shoal, 400 yds. true north from the present red beacon.

Approximate latitude, 33° 4′ 18″ S., longitude, 137° 48′ 8″ E.

This affects Admiralty Chart No. 2389b and Plan 403.

E. J. BEAUMONT, COMDR., R.I.M.,
Port Officer of Calcutta.

Published for general information.

C. B. BAYLEY,
CALCUTTA, *the 15th September 1902.* *Asst. Secy., Marine Department.*

GOVERNMENT OF BENGAL—MARINE DEPARTMENT.

NOTICE TO MARINERS—No. 258.

[Second Publication.]

AUSTRALIA—QUEENSLAND.

Great Sandy Strait entrance—Pilot station disestablished at Inskip point.

THE British Admiralty has given notice (No. 491 of 1902) that, after 30th June 1902, the Pilot station at Inskip point, Great Sandy strait entrance, would be discontinued.

Vessels requiring the services of a pilot through Great Sandy strait are requested to give at least 24 hours' notice to the Marine Department before departure from Brisbane, and similar Notice to the Harbour Office, Rockhampton, or Townsville, if bound from the northward.

Approximate position, lat. 25° 48½′ S., long. 153° 4′ E.

This Notice affects the following Admiralty Charts:—Moreton bay to Sandy cape, No. 1068; Great Sandy strait, No. 1030: Also, Australia Directory, vol. II, 1898, page 152, and Supplement, 1900, page 7.

E. J. BEAUMONT, COMDR., R.I M.,
Port Officer of Calcutta.

Published for general information.

C. B. BAYLEY,
CALCUTTA, *the 6th September 1902.* *Asst. Secy., Marine Department*

GOVERNMENT OF BENGAL—MARINE DEPARTMENT.

NOTICE TO MARINERS—No. 259.

[Second Publication.]

AUSTRALIA—VICTORIA—PORT PHILLIP ENTRANCE.

Point Lonsdale lighthouse—Night tidal signals intended.

THE British Admiralty has given notice (No. 492 of 1902) that on and after 1st January 1903, in order to indicate the direction of the tidal streams between point Lonsdale and point Nepean *one green fixed* light during the ingoing stream, and *two green fixed* lights during the outgoing stream, will be exhibited at point Lonsdale lighthouse, below the main light.

Approximate position, lat. 38° 18′ S., long. 144° 37′ E.

This Notice affects the following Admiralty Charts:—Port Phillip, Nos. 1171a, 2747a: Also, List of Lights, part VI, 190, No. 1109; and Australia Directory, vol. I, 1897, pages 431, 494.

E. J. BEAUMONT, COMDR., R.I.M.,
Port Officer of Calcutta.

Published for general information.

C. B. BAYLEY,
CALCUTTA, *the 6th September 190.* *Asst. Secy., Marine Department.*

GOVERNMENT OF BENGAL—MARINE DEPARTMENT.

NOTICE TO MARINERS—No. 260.

[Second Publication.]

BAY OF BENGAL—BURMA COAST.

Rangoon river—New tidal gauge erected.

THE Bombay Government has given notice (No. 110 of 1902) that information has been received from the Principal Port Officer, Burma, Rangoon, dated 15th August 1902, that a new Tide Gauge has been erected nearly opposite the Syriam Lights. It is ready for reference.

This Notice affects the following Admiralty Chart:—Rangoon river and approaches, No. 833: Also, Bay of Bengal Pilot, 3rd Edition, 1901, page 353.

E. J. BEAUMONT, COMDR., R.I.M.,
Port Officer of Calcutta.

Published for general information.

C. B. BAYLEY,
CALCUTTA, *the 6th September 1902.* *Asst. Secy., Marine Department.*

GOVERNMENT OF BENGAL—MARINE DEPARTMENT.

NOTICE TO MARINERS—No. 261.

[Second Publication.]

BAY OF BENGAL—CHITTAGONG COAST.

Karnafuli river—Depth of water in the river channels.

THE Port Officer, Chittagong, has given notice that the following depth of water was found in the river channels by soundings taken on the 5th September and reduced to zero:—

	FT.	IN.
Track No. 1—Outer bar	12	6
Track No. —Inner bar—		
Disc on diamond	10	0
Track No 3—		
Triangle on cross and ball	23	0
Track No. 4—Guptakhally crossing—		
Tripod on diamond	15	0

E. J. BEAUMONT, COMDR., R.I.M.,
Port Officer of Calcutta.

Published for general information.

C. B. BAYLEY,
CALCUTTA, *the 8th September 1902.* *Asst. Secy., Marine Department.*

GOVERNMENT OF BENGAL—MARINE DEPARTMENT.

NOTICE TO MARINERS—No. 256.

[Third Publication.]

BAY OF BENGAL—BURMA COAST.

Rangoon river—The F. L. V. "Martaban" relieves temporarily the present floating light-vessel at the Krishna shoal.

THE Principal Port Officer, Burma, has given notice dated the 21st August that the F. L. V. *Martaban* will relieve temporarily the present floating light-vessel at the Krishna shoal on the 30th September 1902.

The light to be exhibited on that date will be a white flash of 5 seconds' duration every 45 seconds.

This Notice affects the following Admiralty Charts:—Bassein river to Pulo Penang, No. 830, Koronge island to White Point, No. 823: Also, List of Lights, VI, 1901, No. 364, and Bay of Bengal Pilot, 1901, page 345.

E. J. BEAUMONT, COMDR., R.I.M.,
Port Officer of Calcutta.

Published for general information.

C. B. BAYLEY,
CALCUTTA, *the 30th August 1902.* *Asst. Secy., Marine Department.*

GOVERNMENT OF BENGAL—MARINE DEPARTMENT.

NOTICE TO MARINERS—No. 257.

[Third Publication.]

BAY OF BENGAL—BURMA COAST.

Moulmein river approaches—Rock reported.

THE Bombay Government has given notice (No. 105 of 1902) that the Commander of R. I. M. S. *Dalhousie* reports the existence of a rock with 19 feet least water on it and deep water round it south of Green Island.

The rock lies S. 18° W., 1·65 miles from Amherst Pagoda.

This Notice affects the following Admiralty Charts:—Moulmein river and approaches, No. 1845, and Koronge Island to White Point, including the Gulf of Martaban, No. 873: Also, Bay of Bengal Pilot, 3rd Edition, 1901, page 374.

E. J. BEAUMONT, COMDR., R.I.M.,
Port Officer of Calcutta.

Published for general information.

C. B. BAYLEY,
Asst. Secy., Marine Department.

CALCUTTA, *the 30th August 1902.*

REGISTERED No., C209.] No. 38 of 1902.

SUPPLEMENT TO

The Calcutta Gazette.

WEDNESDAY, SEPTEMBER 17, 1902.

OFFICIAL PAPERS.

[Non-Subscribers to the GAZETTE *may receive the* SUPPLEMENT *separately on payment of five rupees per annum if delivered in Calcutta, or seven rupees and eight annas if sent by post.]*

CONTENTS.

	Page
RESOLUTION on the Annual Report of the Archæological Survey, Bengal Circle, for the year ending with April 1902, and the Report	1291
Extract from the Report on the Administration of the Salt Department during the year 1901-1902	1328
Weather and Crop Report for the week ending the 15th September 1902	1328
Meteorological Report of the Province of Bengal for the month of August 1902	1332
TABLE of Rainfall recorded at stations in Bengal in August 1902	1334
Vital Statistics of Districts and Towns in Bengal for the month of July 1902	1340
Areas leased for Irrigation up to end of July 1902	1346
Circular and Eastern Canal for the week ending Saturday the 13th September 1902	1348
Results of the Meteorological Observations taken at the Alipore Observatory from 7th to 13th September 1902 ...	1350
Weekly Return of Traffic Receipts on Indian Railways ...	1351

RESOLUTION ON THE ANNUAL REPORT OF THE ARCHÆOLOGICAL SURVEY, BENGAL CIRCLE, FOR THE YEAR ENDING WITH APRIL 1902, AND THE REPORT.

GENERAL DEPARTMENT—MISCELLANEOUS.

Calcutta, the 9th September 1902.

RESOLUTION—No. 2915.

READ—

The Annual Report of the Archæological Survey, Bengal Circle, for the year ending with April 1902.

The Second Annual Report of the Archæological Survey Department, Bengal Circle, has been submitted by Dr. Bloch, the Archæological Surveyor, who has been in charge of the Department since its constitution in April 1900. During the first year of his appointment the Archæological Surveyor visited the Puri, Cuttack, Murshidabad, Sonthal Parganas, Malda, and Dinajpur districts, spending about 60 days on tour. During the year under report he spent 145 days on tour in the districts of Champaran, Muzaffarpur, Gaya, Patna, Shahabad, Birbhum, Hooghly, Puri, Khulna, Dacca, and Mymensingh. The object of these tours of general inspection has been to ascertain what localities from their antiquarian interests are deserving of detailed and systematic exploration, and what antiquities should be preserved. Dr. Bloch has recently submitted programmes for future work; and the Lieutenant-Governor has decided that the

Buddhistic antiquities in the Bihar districts and especially the exploration of the site of the ancient Vaisali in Muzaffarpur district deserve first attention.

2. Dr. Bloch gave special attention during the year to the antiquities in the districts of Champaran, Patna, Gaya, and Shahabad. The most important remains in the district of Champaran are the three Asoka pillars, viz., the Rampurwa pillar and the two Lauriya pillars at the villages of Nandangarh and Araraj. In accordance with Dr. Bloch's recommendation, an estimate of the cost of replacing in position the Rampurwa pillar has been called for from the Superintending Engineer. The Lieutenant-Governor hears with regret of the vandal scribbling of names on the two Lauriya pillars, and desires that the district authorities will protect monuments from such acts so far as is possible.

The suggestion that the ancient rock-cut caves on the Barabar and Nagarjuni Hills should be protected from intrusion of *jogis* and *sadhus* must be considered by the Magistrate of Gaya, as also the proposal for the removal to the Indian Museum of the Buddhistic statues that are lying uncared for in the village of Bishenpur, in the district of Gaya.

The hill fort of Shergarh, an important relic of Sher Shah, in the district of Shahabad, is reported to be uncared for and overgrown with jungle. The local Public Works officer will be requested to make arrangements for the better protection of this interesting building. The Temple of Mundesvari and the tomb of Bakhtiyar Khan in this district are also worth preserving. A separate report on these monuments has been received from Dr. Bloch, and estimates for repairs have been called for from the Executive Engineer, Arrah Division.

Repairs of the Bhubaneswar and Kanarak Temples in the district of Puri are going on, and Dr. Bloch's recommendation regarding the cleaning of the carvings in some of the temples may be commended by the District Magistrate to the authorities in charge of these temples.

The Archæological Surveyor has submitted a separate report on the remains at Tribeni and Pandua, in the district of Hooghly, and has suggested certain petty repairs, which will be taken up when funds are available.

3. The total expenditure incurred last year on the repairs of ancient monuments amounted to Rs. 29,679, out of which a sum of Rs. 15,646 was expended on the repairs of the ruins at Gaur and Pandua, in the district of Malda, and Rs. 12,778 was spent on the repairs of the temples in the district of Puri; the gateway of the Juma Masjid near Rajmahal was also repaired, and wire netting was placed over the openings in Hasan Khan Sur's tomb and Sher Shah's tomb at Sassaram.

4. The "List of Ancient Monuments in Bengal" was prepared and published by the Public Works Department in 1895. To bring the work up to date and to correct inaccuracies and supply omissions, it has been decided to publish a revised edition. At the suggestion of the Director-General of Archæology, the work of revision has been entrusted to the Archæological Surveyor.

5. The Lieutenant-Governor thanks Dr. Bloch for his very interesting report.

By order of the Lieutenant-Governor of Bengal,

W. C. MACPHERSON,

Offg. Secretary to the Govt. of Bengal.

(No limit has been fixed as to the number of pages).

ANNUAL REPORT

OF THE

ARCHÆOLOGICAL SURVEY, BENGAL CIRCLE.

For the year ending with April 1902.

PART I.—GENERAL REMARKS.

1. *Constitution of the Department.*—The non-gazetted staff of the Department remained as it stood at the time of my last report, up to the 13th March 1902, when the Pandit of the Survey, Babu P. C. Mukherji, joined the office of the Director-General of Archæology in the capacity of a draftsman. The vacancy thus created has not yet been filled up, and a proposal for doing so will be soon submitted. It appears to me most essential to engage the services of a good photographer, as neither I nor my draftsman are able to take photographs, and I shall propose accordingly.

2. *Tours of the Archæological Surveyor.*—I have been on tour from the 6th November 1901 to the 7th April 1902, that is, altogether 145 days, not counting two short interruptions in February and March, when I returned to Calcutta. My original programme included a visit to the Patna Division, Assam, and Dacca. I had, however, to postpone my visit to Assam until next year, as on my return from Bihar the season was already too far advanced to complete this journey. Instead of this I added some shorter tours to my programme, which I could still conveniently undertake. Having received information about the excavation having begun around the Black Pagoda at Kanarak in district Puri, I went down there on the 20th February 1902, in order to see how the work was done, and if necessary, to offer any suggestions to the Engineer in charge. I also took this opportunity to inspect the work, which is now in progress at Bhubaneswar and Khandagiri in the same district. At all these places, I was accompanied by Rai Prasanna Kumar Pal Bahadur, the Honorary Assistant Engineer in charge of the work. The results of my observations will be detailed in Part II of this Report. On my way to Dacca, I visited Khulna, in order to see the important remains at Bagerhat, viz., the tomb of Khanja Ali, as he is locally called, and the big mosque with 77 domes, called Sat Gumbaz, close to his tomb. Finally, I was ordered to inspect the remains at Atia in the Tangail subdivision of the district of Mymensingh, about which some information had been submitted to Government through the Collector of Mymensingh. I visited this place after the completion of my tour in Dacca district, and I have submitted a special report on the remains there in my letter No. 37, dated the 29th April 1902. I was also ordered to inspect the Siva temples at Bakresvar in the Birbhum district, and the tomb of Zafar Khan Ghazi at Triveni and the mosque and minar at Pandua, both in the Hooghly district. I did this on my way back from the Patna Division, and I have submitted special reports on these remains in my letters Nos. 13 and 16, dated the 18th and 19th February 1902, respectively.

My journeys during the last touring season thus include the following districts: Champaran, Muzaffarpur, Patna, Shahabad, Gaya, Birbhum, Hooghly, Puri, Khulna, Dacca, and Mymensingh. Their results will be detailed in Part II of this Report. The principal object of these preliminary inspection tours was to inspect as many ancient remains as possible, in order to ascertain what is really worth preserving, and also which places or areas should be surveyed in a more detailed and systematic way.

With regard to the latter point, I have submitted certain proposals in my letter No. 38, dated the 29th April 1902. I consider it essential that good photographs, plans, and drawings should be prepared of some of the more important groups of monuments in this province. Very little has been done in this direction, and scarcely anything has been published. It seems, however,

advisable to me to undertake such works always with a view to publication; otherwise, money and labour spent on them will be almost lost to those who take an interest in archæology. Conservation, it is true, is the primary object of the present survey; but as owing to the liberality of the Local Government during the last years, the most important monuments in Bengal are now in a fair state of repairs, time appears to have come to make some of them better known to the general public interested in them by means of *facsimile* reproductions of good photographs and drawings accompanied by the necessary explanatory text, as has been done with regard to other important ancient remains in India.

3. *Tours of Babu P. C. Mukherji.*—Up to the Puja holidays, the Babu travelled in the districts of Champaran, Darbhanga, Gaya, Shahabad, and Patna, where he inspected and reported on a number of ancient nonuments, and from where he brought down impressions of a good many inscriptions. He then visited several places in the Bhagalpur district, the Burdwan Division, and the district of Balasore, until, on the 13th March 1902, he joined his new appointment as draftsman to the Director-General of Archæology. The results of his journeys have been submitted to me in several preliminary reports at the end of each month as well as in a general report, and they will be found detailed in Part III of this Report. As regards inscriptions, the discovery of one important new document is due to him. He found it inside the Gadadhar temple at Gaya, but, unfortunately, the greater portion of it is now covered by a statue of Vishnu in the sanctum of the temple, and his attempts to get permission from the owner of the temple to remove the statue in order to take an impression of the inscription have not met with success. He thus was able to copy only the beginning. As the inscription opens with an invocation to the Sun God, it is probable that it records the erection of a temple of that deity; it is certainly not *in situ* at present. The next two verses are found also in another, hitherto, unpublished Gaya inscription, which also escaped the notice of the Babu. It is now inside a small shrine in the compound of the Vishnupad temple. It refers to the time of Nayapala, tenth century A.D., and mentions the names of three persons, father, son, and grandson, *viz.*, Paritosha, Sudraka, and Visvarupa, who are known to us already from an inscription in the Krishna Dvarika temple at Gaya. The inscription, discovered by Babu P. C. Mukherji, only contains the first name, Paritosha, but it is almost certain that in the portion now covered by the Vishnu statue the two other names follow, and that it belongs to the same period.

4. *Preservation of ancient Monuments.*—Apart from repairs which are going on since previous years, such as the repairs to the temples at Bhubaneswar in the district of Puri, and to the Muhammadan remains at Gaur and Panduah in the district of Malda, or from other repairs which have been sanctioned at the motion of the local Engineers in charge of those buildings, and of which intimation has reached me from time to time, such as the closing by wire netting of the doors and windows of the tombs of Sher Shah and his father at Sassaram in the district of Shahabad, and certain repairs to the palace at Rohtasgarh in the same district,—apart from those, I have submitted proposals with regard to the preservation of the following ancient monuments:—

(*a*) Certain minor repairs to the great Siva temple at Bakresvar in the district of Birbhum. I have, later on, received a communication intimating that the local Sebaits of the place will provide for the cost of these repairs.

(*b*) Repairs to the minar and mosque at Panduah, and to the tomb of Zafar Khan Ghazi and the mosque at Triveni, both in the district of Hooghly. My proposal principally concerns the minar at Panduah, which, though not of any great artistic value, seems to me well worthy of preservation on account its being quite unique in this province. It is evidently an imitation of the Qutub Minar at Delhi. Its fifth storey and top piece have broken down, and I have proposed to re-build these portions, which may be easily done with the help of a lithograph published in 1871 by the late Mr. Blochmann, on which the entire structure is still seen. With regard to the other buildings, I have thought it sufficient if only such preventive measures are taken as may preserve those portions of them which are still standing from complete destruction.

(*c*) Repairs to the broken Asoka column near Pipariya, in the district of Champaran, commonly called the Rampurwa Asoka pillar. It will be

necessary to remove the larger portion of the pillar, now lying in the open field for a distance of some 800 or 1,000 feet to the south, to its original site, where its broken base is still standing, and to put it up there in its original position. I again beg to emphasize the necessity of these repairs owing to the high antiquity and great importance of this monument, and I shall deem it a special favour if the Local Government may see its way to provide the necessary funds for these probably comparatively expensive repairs.

The following proposals have not yet been submitted to Government, but will be so before I go on privilege leave in the beginning of July :—

(*d*) Repairs to the tomb of Bakhtiyar Khan, near Chainpur, in the Bhabuah subdivision of the district of Shahabad. It is almost a copy of the tomb of Hasan Khan Sur, the father of Sher Shah, at Sassaram, evidently of the same time. But it is a very fine specimen of its kind, and now in such a condition as to make repairs urgently required, if the monument is not to be allowed to tumble into pieces. A separate report will be submitted shortly.

(*e*) Repairs to the tomb of the Bengal Sultan Ghiyasuddin Azam Shah, near Mograpara, the site of Sonargaon, the ancient capital of Eastern Bengal, in the Narainganj subdivision of the district of Dacca. It is a plain basalt sarcophagus, resting on a basalt platform. No inscription is found on it, and only tradition points to it as the burial place of this king, who is best known on account of his literary correspondence with the famous Persian poet Hafiz. What will be required to do to it, is merely to raise the platform and the sarcophagus, which have now sunk, and the stones of which have become dislocated. This probably can be done without any great outlay of money. I shall also propose to add a suitable inscribed tablet to it, saying that this tomb is traditionally pointed out as the resting-place of Ghiyasuddin Azam Shah. Similar tablets are now erected at various places of historical interest all over India. A special report will be submitted later on.

5. *Photographs, drawings, and inscriptions.*—As I have already remarked in paragraph 1 of this report, no photographer has been employed by me, and consequently I have not been able to take any photographs of the monuments inspected by me. I intend, however, making provision for this before I start on my next journey. As to drawings, my stay at the places visited by me generally was limited to a short time only. In order to procure good drawings it is necessary to provide for a prolonged stay of several days at each place, in cases even for several weeks. It will even sometimes become necessary to make special preparations, such as scaffolding, wherever the building to be sketched is very high, in order to take the necessary measurements. I do not think that drawings based on mere rough sketches, such as I might have procured during my last journey, are of any value, and it is for this reason that I have not brought back any drawings to speak of. Of inscriptions I have copied and read a great number, partly on the spot from the original stone, partly from impressions on paper. I have already in paragraph 3 of this report referred to the discovery of two new inscriptions at Gaya of the 10th century A. D. I also took an impression of the unpublished Sanscrit inscription at the Akhshaya-vata at Gaya, which is of the same time, and of another small but valuable inscription in Sanskrit at the Prapita-Mahesvara temple close to it. Its date corresponds to Thursday, the 1st May 1242 A.D. As I shall show later on in Part II, these inscriptions are of special interest for the local history of the sacred tirthas of Gaya, helping us to put back their date to a period far anterior to the time when the present temples were erected, which, as I need scarcely remark, are all of comparatively recent age. Some of the many votive inscriptions on Buddhistic images in the districts of Gaya and Patna are also of some interest on account of the names which they preserve. In Dacca, I found on a loose slab an apparently new inscription in Persian poetry mentioning a king Ruknuddin, who is evidently the Bengal Sultan Ruknuddin Barbak Shah (1459—1474A.D.) It is the first instance of an inscription of a Bengal Sultan composed entirely in Persian poetry. I think that for the first time I have succeeded in deciphering the inscription of the time of Sher Shah on the dargah of Shah Juman Madari at Hilsa, near Bihar, and of the short inscription over the prayer niche of the tomb of Sher Shah's father at Sassaram. I regret

that I was unable to procure an accurate copy of the inscription over the central arch of the Alamgiri Masjid at Rohtasgarh. It is written in very small characters, and put up in a position very high up, so as to make it impossible to read it while standing down below. But from what I could make out, it is evidently a record of Sher Shah's time, thus helping us to fix the accurate date of this Mosque, which local tradition ascribes to the time of Alamgir. Another, evidently unpublished, inscription of the time of Shah Jahan was found over the door to a tomb at the foot of Rohtasgarh hill. It is of some interest, as it mentions the several parganas forming the jagirs of the then Qiladar and Darogah of the fort. A great many new inscriptions of the Moghul time also have been copied; their principal value consists in enabling us to determine the accurate date of the buildings to which they are attached. I shall refer to these inscriptions in connection with my notes on the places where they are found in Part II of this report, and I do not, for this reason, consider it necessary to add to this report a list of all the inscriptions of which copies have been taken.

6. *Sculptures and statues.*—In two of the districts visited by me, *viz.*, Gaya and Patna, a great many ancient statues are found scattered all over the country. Generally, they are now put up in modern temples and worshipped as something quite different, of course, than what they originally were meant to represent. But many of them are still lying loose, and there is scarcely a single village where not at least some fragments of ancient statuary are collected under the village pipal tree. Those statues generally belong to the time of the Pala kings, who ruled over Bihar and portions of Western Bengal from 800 to 1200 A.D They are both Buddhistic and Brahmanical, and they afford a very graphic illustration of the connection between these two rival sects, which seems to have developed more and more towards a gradual intermixture of both, the result being that Buddhism became more and more Hinduized. As an instance of this, I may quote the statue of Karttikayini, the female energy of the war god, inscribed with the Buddhist creed. I found this curious image at Dharawat, in the district of Gaya.

The Buddhistic images are of special interest. With the exception of the Græco-Buddhistic sculptures from Gandhara, found all along the North-Western frontier of India, they are the only class of Indian Buddhistic art, which has come down to us with a fair amount of completeness. The Indian Museum in Calcutta is the only institution which possesses a good collection of this particular branch of Buddhistic art, and it is a matter of great regret that many rare specimens, which would greatly add to the value of this collection, are at present put up in local shrines, and thus have become objects of religious worship, so as to make it impossible to remove them to this institution, where not only they would be better cared for than at their present places, but also serve a more useful purpose in the interest of archæology, than they now do. I have, however, noticed a few valuable specimens, now lying uncared for, which it will be possible to procure for the Indian Museum, and I shall later on submit a special report with regard to this point.

7. *Concluding remarks.*—The staff of this Department has worked to my entire satisfaction. Babu P. C. Mukerji has shown great zeal in completing the tours which he was ordered to undertake, for a great part of the year under trying circumstances. My draftsman, Babu Haridas Dutta, has been of great use to me in copying inscriptions, for which he is particularly skilled. For reasons above stated, I am not able to submit any specimens of his drawings; but drawings of his, previously submitted, have met with great approval. My clerk, Babu Krishna Chandra Mozumdar, was left in sole charge of my office during my absence on tour, and he has given me much satisfaction by the great care with which he discharged his duties.

PART II.—NOTES ON ANCIENT MONUMENTS VISITED BY THE ARCHÆOLOGICAL SURVEYOR.

A.—DISTRICT CHAMPARAN.

8. *General remarks.*—The following is a list of ancient remains in the district of Champaran, inspected by me:—

The three Asoka pillars, *viz.*, the two Lauriya pillars, one near Thana Gobindganj and the other fifteen miles north of Bettiah, and the broken

pillar near village Pipariya, Thana Shikarpur, in the Bettiah subdivision. The last is commonly known as the Rampurwa pillar, while the others are called, respectively, the Lauriya-Araraj and Lauriya-Navandgarh, or Radhia and Mathia pillars. The last two names are misnomers, they having been chosen, as it appears, by Mr. Hodgson's Pandit in order to avoid the obscene-sounding name Lauriya;

The ancient Buddhist stupa, two miles south-west of Thana Kesariya;

Another mound, evidently the ruins of a Buddhist stupa, called Sagardih, on the road from Pipra to Kesariya;

The earthen barrows, probably sepulchral mounds, close to the second Lauriya pillar, fifteen miles north of Bettiah;

The Nandangarh, wrongly called Navandgarh, close to the same place;

The Chankigarh, three miles west of Thana Shikarpur;

Ancient fort and modern temples at Simraon, in Nepalese territory, five miles from Purnahia factory;

The Nonachaur-ka-garh, five miles east of Motihari;

Fort and temples at Sitakund and Bediban, close to Pipra railway station.

I shall deal with them in the order of this list.

9. *The Asoka pillars.*—These pillars, together with another one near Bakhra, in the district of Muzaffarpur, which will be mentioned later on, mark the stages of the journey to Nepal, which Asoka undertook in the 21st year of his reign in order to visit some of the holy sites of Buddhism. In the 27th year of his reign he ordered six religious edicts to be engraved on them. These edicts are not on the Bakhra pillar, but from its general style, as also for other reasons, there can be no doubt as to its origin. Of the three Champaran pillars, that at Lauriya-Nandangarh, fifteen miles north of Bettiah, is best preserved. With the exception of some injuries to the jaw of the lion on its capital, evidently the effect of a cannon shot, the mark of which may still be seen on the northern face of the pillar, it is still almost perfect. I think General Cunningham is right in attributing this damage to some zealous followers of the army of Mir Jumla, which was then on its way back from Bengal after the defeat of Sultan Shuja, the brother of Aurangzeb. The date Hijra Era 1071=A. D. 1660-61, which is found inscribed on the pillar in connection with the Muhammadan creed and the name of Aurangzeb, points to this. I believe that the destruction of the northernmost pillar near Pipariya, some twenty miles distant from the Lauriya-Nandangarh pillar, is due to the same agency. The Lauriya-Araraj pillar, near Thana Gobindgunj, has lost its capital, but is otherwise in a fair state of preservation. Both Lauriya pillars seem to suffer considerably on their northern faces from the effect of the weather; they look quite black there, and their polish, although beautifully preserved otherwise, has gone in these portions. A few small cracks also begin to spoil the writing, which, however, is still in a very fair state. I am afraid no preventive measures against this are available. Perhaps the pillars might be cleaned from time to time, provided this is done with great care. Although they are now surrounded by iron railings, vandal scribbling of names on them is still going on. The latest addition to this illustrations list is the name of S. P. Sinha, a Sub-Inspector of Police from the Lauriya out-post, who recorded his name on the Lauriya-Nandangarh pillar as lately as the 31st May 1898. Luckily the ancient edicts are so high up that they cannot be reached without the help of a ladder. These modern names are all on the lower, uninscribed surface of the pillars.

The northernmost, so-called Rampurwa pillar, near village Pipariya, is still deplorably neglected. I have accordingly, in my letter No. 40, dated the 1st May 1902, submitted a special report on this pillar, proposing that it might be put up again in its original position. Its broken base still stands *in situ*, midway between two low earthen mounds covered with brick fragments, evidently the remains of some Buddhistic monuments. The greater portion of its shaft now lies within a swamp, almost entirely under water, some 800 or 1,000 feet to the north of its base. Evidently an attempt was made to remove it, which, however, soon was given up on account of its difficulty and costliness. Close to it stands the capital, which was disconnected from the shaft by Mr. Garrick in 1881 in order to take a photograph of it. It still stands in the same position as put up by Mr. Garrick, but the lion was

already then lost, and it seems hopeless to recover it. Only the broken feet of the lion are still on the top of the capital.

The three Asoka pillars are by far the most important remains in the district, and range among the most valuable ancient monuments of India. It is for this reason that I venture to hope that my suggestions with regard to the conservation of the Rampurwa pillar will meet with favourable consideration by Government.

10. *The Kesariya and Sagardih Stupas.*—The first stupa stands two miles to the south-west of Thana Kesariya. It consists of a round brick tower raised upon a brick platform. I think General Cunningham is right in identifying it with one of the monuments described by the Chinese pilgrim Hiuen Thsang. It was at that time, in the 7th century A. D., believed to have been erected over a place where Buddha, in one of his former births, had appeared as a Chakravartti or universal monarch. From its general appearance it may well be ascribed to the first centuries of the Christian Era. The absence of any surface ornamentation around the tower is remarkable. Apparently these have disappeared in the course of time. A hole has been dug into the tower, probably by some treasure-seeker. There is, however, little probability that it contains any relic deposit, as for the reason stated above, the monument seems to belong to the class of memorial stupas, of which many existed in India at various places, connected with some remarkable event in the life of Buddha or other saints. The platform of the stupa is now covered with thick jungle, and difficult of access. Without clearing away the jungle and making some excavations all around it, it is impossible to form an idea of its exact structure. I think, however, that this would be worth undertaking, although the site does not seem promising with regard to statues and sculptures. Probably the stupa had only some plain ornaments around its surface. I did not find the statue of Buddha inside a low brick mound close to the stupa which General Cunningham mentions; the mound, which has been excavated several times, may still be seen.

The mound called Sagardih by General Cunningham is locally known simply as 'bhisa' or mound. The village Sagar is close to it. It stands at a distance of some three or four miles from Pipra, on the road to Kesariya. Although it is now too thickly overgrown with jungle vegetation to allow of forming an accurate idea as to its original shape, I do not hesitate to accept General Cunningham's opinion that it was a Buddhistic stupa. At the foot of the mound is the tomb of a Muhammadan saint called Mallang. It is a very insignificant, modern looking brick building, with vaulted roof. At a little distance there is a large tank with a debi-ka-asthan on its borders, such as hundreds may be seen all over the country. Altogether, this place does not look like a promising site for any detailed investigation.

11. *Earthen barrows probably sepulchral mounds at Lauriya, 15 miles north of Bettiah.*—I believe these mounds would very well repay a systematic exploration. It would thus be possible to form an opinion as to their original destination. Hitherto, the only clue seems to be a short reference in the Bengal Administration Report from 1868-69, saying that a short time ago, a leaden and perhaps a second iron coffin with human bones was found in some of them. The various excavations by General Cunningham and his assistants have not yielded any results to speak of. When I was at Lauriya, Mr. Moore, the present Manager of the Lauriya farm, showed me some copper vessels, which, together with two ancient copper coins, had been dug up from one of the mounds. The copper vessels were of exactly the same shape as those at present in use, and, although covered with verdigris, may be of quite recent date. Of the coins, one belonged to Mahmud Shah of Jaunpur and had the date 847 A.H.= 1443 A.D. The other was very much worn off and could not be identified. From its size, it looked like a Græco-Indian or Indo-Scythic coin from the North-West, rather a remarkable find considering the locality; but nothing definite could be made out with regard to it.

I counted altogether fifteen mounds, some very small, some higher. They are arranged in three rows, one running from west to east up to the place where the Asoka pillar stands, and two parallel rows, running from north to south, at the western end of the first row. This arrangement suggests that they were erected according to some definite plan or scheme. Some of the eastern

mounds show fragments of brick on their surfaces; others seem to consist merely of earth, which in course of time has hardened and developed into a stiff clay, which is now to a large degree used by the natives of the place, who mix it with water in order to paint the walls of their houses.

12. *The Nandangarh and Chankigarh.*—These two remarkable ruins, which are situated in sight of each other, one close to Lauriya, 15 miles north of Bettiah, and the other some 10 or 11 miles north of it, are locally believed to be forts built by some ancient and fabulous Rajas. The former is generally called Navandgarh, but the actual local pronunciation is Nandangarh. From time to time attempts have been made to identify them with some of the large Buddhist stupas, mentioned by the Chinese pilgrims, which, from the distances and directions recorded by them, may be looked for in these or adjacent tracts of the country. Even recently Mr. V. A. Smith has upon similar calculations pronounced the Nandangarh to be the stupa erected by Asoka over the ashes of Buddha, but he freely admits the impossibility to affirm this positively, until an adequate survey of the entire groups of ruins is made, and well-devised excavations are effected. From my own preliminary observations I am not inclined to believe that these huge and, as it seems, solid masses of bricks are the remains of any buildings of this kind, and I should rather look upon them as some sort of fortifications. Around the Nandangarh the traces of an old ditch are still visible. On its top, which forms an oblong terrace, traces of some small brick buildings, perhaps watch-towers, remain. The Chankigarh, which is much higher, consists of two parts, one platform with sloping sides upon which rests an oblong building, the sides of which fall down perpendicularly, while only the top seems to be a little rounded. A broad winding pathway leads up to the top from the south. Above, no remains are seen, except some small insignificant shrines. At one place some digging has been done, apparently by Mr. Garrick in 1881, although in his report he makes no mention of this. Some sheets of water run around the mound, perhaps the remains of an old ditch. Both mounds seem to consist of solid masses of bricks some 300 to 500 feet in circumference, but I could not observe anything in their structure that resembles a Buddhist stupa. A detailed and systematic exploration of both the Nandangarh and Chankigarh is well worth undertaking, but this will require time and special funds.

13. *The remains at Simraon, Nonachaur-ka-garh, Sitakund and Bediban.*—The remains at Simraon are already within Nepalese territory. It once must have been a large town surrounded by walls, traces of which are still visible; the boundary now runs along the southern wall. Close to the Isra tank is a math with a temple of Kankali, bearing an inscription, the date of which corresponds to 1747A.D. It seems, however, to refer not to the temple to which it is at present attached, but to another older structure. Another larger math is at some distance from the Isra tank, at a place called Ranivas. It contains a large temple of the Nepalese style, enshrining images of Rama and Sita. All these buildings are of quite recent date and possess very little interest. Some unimportant specimens of ancient statuary are found inside of them.

The Nonachaur-ka-garh is wrongly called Sarongarh in the List of Ancient Monuments in Bengal. Sarongarh is about two miles distant and does not contain any ancient remains. The Nonachaur-ka-garh is an oblong fort, divided into four smaller sections by two roads running through it, one in each direction. At the place where they meet an ancient tank exists, which is now silting up. All the four sides of each of the four smaller sections seem to have been protected by walls. They are now mostly dangerous of access, owing to the thick jungle which covers them.

Sitakund and Bediban are two places close to the Pipra Railway Station. The remains at the former place are within an oblong enclosure wall, with a way running through each of its four sides. They consist of a deep circular pond, surrounded by bricks, with four ghats leading down to it, and of several modern looking temples and shrines, together with some Samadhs of Sadhus. The principal temple enshrines eight well-preserved images of an older date, *viz.*, two Ganesas, one seated with four arms, and one dancing with eight arms; one Surya; one Hanuman; one Ravana, with 20 arms and 10 heads, five of which are only shown on the carving; one Vishnu; one Durga; and one Mahishamardini, or Durga, in the act of killing the buffalo-demon. The most

remarkable object of worship inside the Bediban temple, which stands on a high mound, apparently the remains of an older structure, is a slab bearing an inscription in Arabic or Persian. This stone now receives poojah from the Hindus of the place. Unfortunately, it is covered with such a thick layer of cement that it is impossible to read it. General Cunningam thought he could read the name of Mahmud Shah, whom he identified with the Jaunpur king of this name (1450 A.D.). This is probable. Guided by the fact that a Muhammadan inscription had become an object of Hindu worship, and by the style of the principal temples at Sitakund and Bediban, which closely resemble Muhammadan tombs, General Cunningham further started a theory that these places had originally belonged to the Muhammadans and had later on been appropriated by Hindus, a remarkable fact, if true, as generally the reverse has been the case. But I believe this theory has very little to speak in its favour. The peculiar style of the two temples may be observed at several places in Bihar, and does not point to a Muhammadan origin.

The remains mentioned in this paragraph are not worth preserving. Other still more insignificant remains at the same places have been left unmentioned.

B.—DISTRICT MUZAFFARPUR.

14. *The remains at Bakhra-Basar and at Hajipur.*—The remains at these two places are the only ancient monuments inspected by me in the Muzaffarpur district. At the former place the principal object of interest is the Asoka pillar already referred to in paragraph (9) of this report. Although it does not contain any inscription of Asoka, yet its style as well as its material distinctly point to its having been set up by order of this king. Moreover, it is possible to identify it with one of the Asoka pillars, mentioned by Hiuen Thsang at the site of the ancient Vaisali, as General Cunningham has shown. No ancient inscription is found on it, but it has been scribbled all over by modern visitors. The pillar is much lower than the other ones, probably on account of the subsequent rising of the surface around it; also the polish is not as fine as on the other pillars, and the lion on its capital is clumsier than that at Lauriya-Nandangarh, and rests not on a circular abacus with the geese ornament around it, as at Lauriya-Nandangarh and Rampurwa, but on a square base without any ornamentation. Close to it is a low mound, upon which some Buddhist statues of the Pala time are enshrined within in a modern hut. Extensive remains are scattered all over the country for several miles distant. These have been identified by General Cunningham with the ruins of Vaisali, the capital of the Lichhavi country, a famous place in the history of Buddha. Dr. Hoey has recently attempted to set aside this identification, but his arguments are very little convincing. To check the various identifications put forward by General Cunningham would require a detailed and systematic survey of the whole area, accompanied by judicious excavations, a work which, for various reasons, seems to be promising of valuable results. The pillar at Bakhra is in good state of preservation.

Hajipur, an important place in later Muhammadan times, contains an old mosque with three domes, built by Makhsus, in the time of Akbar. This we learn from an inscription over its gateway. Unfortunately the exact date of this record could not be made out. The mosque is built of stone and in a fair state of preservation, except that some of the carvings in its outer walls have become defaced, owing to the influence of time. It is not very remarkable, neither on account of its style, nor for any other reason.

C.—DISTRICT GAYA.

15. *Preliminary remarks.*—The ancient remains inspected by me in this district will be dealt with in the following order:—

The city of Gaya;
Budh-Gaya and adjacent places;
Kauwa Dol;
The Barabar and Nagarjuni Hills;
The remains at Dharawat, close to these hills;

The remains at Bela and Ner;
The remains at Pai Bigha, Ghenjan, and Kispa;
The Hindu temples at Konch, Pali, Utern, Deo, and Umga;
The remains at Pachar and Cheon, near Rafiganj;
The remains at Kurkihar, Punawa, Hasra Kol, and Bishenpur;
The remains at Afsand and Parbati Pahar;
The Muhammadan remains at Miranpur Nadera, Jaru, and Hasanpur Kako.

This arrangement endeavours to group together those ancient remains, which either geographically or for other reasons are connected with each other. With the exception of the last item, all other remains are either Buddhistic or Brahminical. There is scarcely any ancient place in this district as well as in the neighbouring district of Patna, where not ruins of both classes are found together. This is not a mere chance, but, as I have already pointed out in paragraph (6) of this report, it represents fairly accurately the state of affairs which prevailed throughout ancient Magadha in the last centuries before the downfall of Buddhism.

16. *The City of Gaya.*—The many temples which now adorn the sacred tirthas of Gaya, are more or less modern and afford but little archæological interest. They contain, however, a number of ancient inscriptions and statues, with which I shall principally deal in this paragraph.

As regards inscriptions, I have already, in paragraph (5) of this report, mentioned the discovery of some new or unpublished documents at Gaya. One was found by Babu P. C. Mukherji, inside the Gadadhar temple. It probably refers to the erection of a temple to the Sun-God, and dates from the time of Nayapala, *i.e.*, the 10th century A.D. Unfortunately, it is now covered by a statue of Vishnu, and as there seems to be no chance of the owners of the temple agreeing to remove this image, only the beginning of it could be copied. Another very similar record of the same period was found by myself inside a small shrine in the compound of the Vishnupad temple. It tells us that Visvarupa, apparently a high official, well known to us from other Gaya inscriptions, adorned Gaya with a multitude of temples erected to Gadadhara and other deities. The inscription is not *in situ*, and it is impossible to say to which Gadadhar temple it refers; it is certainly not the present shrine of this name. The inscription near the Akshaya-vata or eternal banyan tree is of the same time and is interesting for the local history of Gaya, as it mentions this tree and thus shows that it existed as a tirtha already in the 10th century A. D. Close to it is the temple of Prapitamahesvara, to which a small Sanskrit inscription is attached. It is interesting both on account of its date and the light which it throws on the local history of Gaya. Its date is the Samvat year 1299, the new-moon tithi of Jyaishtha, a Thursday, while the Suratrana (*i.e.*, Sultan) Maujadina was reigning. This Sultan must be identified with Muizuddin Bahram Shah of Delhi, who was taken prisoner on the 10th May 1242 A.D., and murdered on the 19th May of the same year. Calculating all the possible European equivalents of the Indian date, I find that both the 1st May 1242 A.D. and the 18th June 1243 A.D. would agree, both being a Thursday, coupled with the new-moon tithi of Jyaishtha. But, as the inscription refers also to the reign of Muizuddin Bahram Shah, the first date only, *viz.*, 1st May 1242 A.D., is admissible, and the inscription thus was written only a few days before the end of this king. Its purpose is to record a pilgrimage to Gaya, which some Rajput minister, apparently from the North-West, had undertaken. He says: "I have done Gaya. Witness thereof is Prapitamaha." A statement of this kind is now technically called 'Sakshi-Sravana,' or 'invocation of witnesses.' It is incumbent upon every pilgrim either at the end of each of the stations which he has to go through, or at the completion of the whole pilgrimage, on the seventh day, to invoke the gods as witnesses that by completing the prescribed rites he has freed himself from the debt which he owes to his ancestors. In the present ritual, the 'eternal fig-tree' and the temple of Prapitamahesvara are the last station to which the pilgrim goes, and as a record of this kind refers just to the deity of the temple where the pilgrimage now ends, we may conclude that in one important point at least, the ritual to be observed at Gaya some 650 years ago was exactly the same as it now is.

I also copied a small Sati inscription at the Gadadhar temple and an inscription in Telugu characters near one of the ghats leading down to the river Phalgu. The latter I am unable to read myself. Other well-known inscriptions have been left unnoticed.

The only ancient statue, which I found at Gaya, is the figure of an elephant, represented in the act of culling flowers or fruits from a tree, a favourite subject in ancient Indian art. It is decidedly a carving of at least the beginning of the Christian era. It stands inside a small shrine on the way to the Vishnupad temple, and is locally called Gaya-gaja, or the Gaya elephant. I find it mentioned already in Narayanabhatta's Gayanushthana-Paddhati, a manual on the ritual to be observed at Gaya, about 300 years old. All the other images are of the style and material used in the Pala time (800—1200A D.), and probably also later on, but some are remarkable for various reasons, and will be noticed here accordingly. An image of Vishnu, seated cross-legged, with four arms, two of which rest on his lap, while the others hold club and wheel, is rare and not often met with. His female energy, Vaishnavi, is generally represented as seated on Garuda, but I found one image of her, where she is shown standing, with four arms, two of which hold a shell over her breasts, so that the top of the shell just touches her chin, while the other two hold club and wheel. A statue of Hari-Hara, *i.e.*, half Vishnu, half Siva, was remarkable on account of its showing the phallic emblem of Siva; it must be very old, as subsequent ages considered such representations too indecent, and left out this emblem. I found also an image of Siva and Durga, representing them standing, their hands joined together with the nine planets above, and the bull and lion on the pedestal. This is a rare type, the common representation showing Durga seated on Siva's lap in an amorous posture A standing figure of her, with bull kneeling to her right, and lion to her left side, probably might better be called an image of Mahesvari. On an image of Chamunda, one of the seven mothers, I found an inscription saying that it was the pious gift (deva-dharma, *sic !*) of Valahaka, the son of Adhu; this term is generally met with only in Buddhistic votive inscriptions, where it is exceedingly frequent. A curious piece of carving, not altogether rare, represents five round balls, resting on a square plate. When questioned as to its meanings, the local people explained it as a representation of the breasts of Bhagavati. Rude figures of the same meaning are certainly found almost in every village of Bihar, but their shape is different, and I do not know whether the local explanation holds good. I need scarcely refer to the multitude of lingas or Mahadevas found at Gaya. Some imitate nature with a certain accurateness, while others are merely conventional. Some show a great number of small lingas carved around them; they are called 'Sahasra-lingas;' others have one, four, or even five heads of various gods and goddesses carved upon their round surfaces. They are called: ek-mukhi, chau-mukhi, and panch-mukhi Mahadeos respectively. A chaturmukha Mahadeva is already mentioned in an ancient inscription from Budh-Gaya, published by General Cunningham in his Mahabodhi, where he has misunderstood the term.

The absence of Buddhistic images in Gaya is remarkable. I found only a few inside the shrine on the top of the Pretsila Hill, and also at some other places. The temple on the Pretsila Hill contains an inscription both in Nagari and Bengali characters, the date of which corresponds to Saturday, the 23rd July 1774 A. D. (new style). It says that the steps leading up to the hill were built, for the convenience of pilgrims, at the expense of Madan Mohan Dutt of Calcutta; the gomasta was Ganga Narayan Kar of Orissa, village Gopalpur, pargana Balu, Sirkar Cuttack; the tahvildar was Kali Charan Chaudhuri, of village Simlagudi, pargana Pandua, in Burdwan. It took one year to complete this work.

A modern dharamsala in front of the Prapitamahesvara temple bears a date corresponding to Sunday, the 4th February 1849 A. D. Inside the temple, on the Brahmayoni Hill, are some footprints dedicated by Maharaja Jayaji Rao Sindhia. The last hill receives its name from a small natural fissure in the rocks on its top, which just enables a person to crawl through it. This is looked upon as a symbol of the yoni or womb, and the pilgrim by going through this procedure escapes the fate of being reborn from a human womb.

Other temples and shrines visited by me call for no remarks here.

17. *Budh-Gaya and environs.*—I do not consider it necessary to offer any remarks here on the great temple at Budh-Gaya and its surroundings, as they at present stand. In addition to the known inscriptions on the ancient railing, I found another unnoticed one on one of the pillars, which are now inside the Bakraur Math. It says that the pillar was the gift of Nagadeva, the wife of Raja Bujhamita. On one of the statues inside the great temple, I found an inscription saying that it was presented by Indrabhadra, who came from Samatata, *i.e.*, Lower Bengal. He appears to have been a spiritual descendant of Silabhadra, of the royal family of Samatata, who at the time of Hiuen Thsang's visit (635 A. D.) was a venerable man of over eighty years. The monastery, where he resided, has been identified with some site near the modern Dharawat. I have met with other instances showing that monks adopted names formed with the same compound as the names of their gurus and pragurus, teachers and teacher's teachers. Evidently, they chose a new name on entering the order, as modern sanyasis still do. On a railing pillar outside the great temple is an inscription in modern characters saying that a pandit Jinadasa, who came from the hills, visited the Mahabodhi-bhattaraka,' evidently the Bodhi-tree. He has forgotten to record the year; the inscription concludes abruptly with Samvat, without any numerical figures, but the characters are scarcely older than the 15th century A. D. There is, however, nothing remarkable about this record, as the Bodhi-tree still is, and apparently long ago has been, one of the sacred places visited by the Hindu pilgrims going to Gaya.

Other places near Budh-Gaya, to which Hindus have to make a pilgrimage, are Dharmaran and Maltangi. The latter name is a corruption of Matanga linga. It contains a tank, called Matanga-vapi, which has been dug out later on within the area of an older and larger one, which has now entirely silted up Close to it is a modern temple with a linga, called Matangesa. As the ancient stupa identified by General Cunningham with the Gandhahasti stupa, or the place where Buddha formerly had appeared as a large elephant, is very near to it, and as Matanga in Sanskrit means 'Elephant,' it seems obvious that the names Matanga-vapi and Matangesa contain a reminiscence of this ancient Buddhist site. Another place near Budh-Gaya deserves mention for one reason. It is visited by the Burmese as the traditional spot where Buddha was sheltered by the snake-king Muchilinda. Locally it is called Mucharin, which is evidently a corruption of Muchilinda. There is nothing to be seen there except an old tank. General Cunningham tells us that in 1861 he made this identification with the help of Hiuen Thsang, and that he suggested the same to the members of some Burmese embassy, whom he happened to meet there, and who at once accepted his theory. I think there is little doubt that the worship, which this wholly insignificant spot now receives from the Burmese, is due to General Cunningham's identification.

The cave on the Mora Hill, to the north-east of Budh-Gaya, is traditionally believed to be the Pragbodhi, a place where Buddha resided for some time before he reached Uruvilva, the modern Budh-Gaya. The cave is a natural fissure in the rock, about midway to the top of the hill. Its entrance has recently been closed by a masonry wall, put up by the Jogi who resided in the cave. It admits access only through a small door. No ancient remains of any importance are to be seen at this place.

18. *Kaswa Dol.*—The remains here are the ruins of an ancient Buddhist temple and a number of rock carved images, all along the foot of the hill. The temple enshrines a large statue of Buddha, seated, in the act of invoking the earth, when he was attacked by Mara and his army. This is one of the largest statues of Buddha which exist, and in fair preservation, except that a portion of the halo has broken. It still is *in situ* inside a small brick built cell, but the temple is otherwise in utter ruins, only parts of its original brick-walls and some 13 granite pillars being traceable. The pillars probably supported an open hall in front of the temple.

The rock carvings represent almost exclusively Brahmanical deities. I only observed three Buddhist figures among them, *viz.*, one Vajrasattva, one Prajnaparamita, and one seated Buddha. The row in which I found these images continued with other Hindu deities, a further instance of the intermixture of both sects, to which I have already had occasion to point. The great

prevalence of figures of Mahishamardini among these carvings deserves to be noted. All the carvings may belong to the period from 800 to 1200 A.D. The stone does not withstand the influence of the climate, and some carvings have become very faint.

19. *Barabar and Nagarjuni Hills.*—The ancient rock-cut caves on those hills belong to the most interesting remains in this province; they exhibit fine specimens of the high proficiency with which in those remote ages, 3rd century B.C., Indian masons were able to handle such a hard material as the granite stone of those hills. Their polish is of a high order, and still almost perfect. Unfortunately, it has in some places become spoilt by Jogis and Sadhus, who consider it their right to reside inside the caves, and who put up crude stone walls against them. I found four of the caves inhabited by those worthies: one was a Bengali from Howrah, with University education. An immediate stop should be put to such a nuisance, and every modern occupant should be turned out at once.

There are altogether seven caves, four on the Barabar and three on the Nagarjuni hills. The former were dedicated by Asoka and the latter by his grandson, Dasaratha, to members of the Ajivika order, an ancient class of Brahmanical ascetics. Subsequent inscriptions show that in the middle ages also Hindu ascetics dwelt in them; probably they were never appropriated by Buddhist. It is evidently for this reason that they were not visited by the Chinese pilgrims, although their routes took them into the immediate vicinity of the caves.

20. *Dharawat.*—The remains of an ancient stupa, described by General Cunningham, are to the south of the Chandokar talao, midway up the hill. Only fresh excavation can throw new light on these structures. Two modern temples in the north-eastern corner of the tank, and a small shrine at some distance to the east, contain a large collection of ancient statues. I have already, in paragraph 6 of this report, referred to the remarkable image of Karttikayini with the Buddhist creed, which I saw there. A large statue of Avalokitesvara is lying, apparently uncared for, between both temples. It is a very curious piece of carving, and might, probably, without difficulty be removed to the Indian Museum. I observed also a curious figure of Surya inside the southern temple, which represents him with four arms, two of which rest on his knees, one holding a rosary and the other a water-vessel, while the other two are uplifted and hold each one full-blown *lotus*. The horses drawing his chariot are represented not, as usual, *en face* but *en profil*.

21. *Bela and Ner.*—The modern temple close to the Bela Inspection Bungalow contains one remarkably well-preserved big statue of Chamunda and a number of smaller ones, notably a carving showing three goddesess standing in one row, which seem to represent Brahmani, Sivani, and Vaishnavi. Close to the modern temple are the ruins of an older one, now mere heaps of bricks with two lingas standing upon them.

The temple at Ner is of little interest only. Its walls, and a pillared hall in front of it, are still standing. They are just inside the village, obstructed by modern mud-huts, and seem to be used as a cow pen. To the west of the village are the ruins of another temple, which seems to have stood inside a tank. They are very much gone, and very little remains of this structure.

I noted here some remarkable lingas, with four male figures around them, two standing and two dancing, both groups on corresponding sides; on each side of the pedestal, which is a square, a male figure is represented lying. I was unable to make out the meaning of these carved figures.

22. *Pai Bigha, Ghenjan, and Kispa.*—Pai Bigha is a large village near Makhdumpur station, where, according to the list of ancient monuments in Bengal, some antiquarian remains are said to exist. The place had better be struck out from the list. The collection of ancient sculptures inside the village shrine is of no importance at all; a dilapidated Idgah outside the village deserves no mention; and what Mr. Beglar considers the remains of an ancient Siva temple, are merely some crude fragments of granite pillars, marked with the *trisul*, such as may be found in almost every village of the district.

At Ghenjan, some ancient Buddhist and Hindu statues may be seen, among others an image of Brahmani and Sivani The principal figure is a large seated Buddha, wearing necklace and three-pointed diadem. Statues

of this kind are exceedingly common, but their meaning still remains a matter of doubt. They exhibit all the various postures and attitudes of the ascetic Buddha; but why in them he wears a necklace and a diadem,—a garb not suitable for an anchorite, is puzzling. The ruins of an ancient brick temple also exist to the north-east of the village.

At Ghanjan I found on the pedestal of a large statue of Avalokitesvara an inscription, which says that it was the gift of the Sthavira Ratna Sinha, who came from Nalanda, and was the disciple of the Sthavira Vriddha Sinha, and that it was dedicated by him for the benefit of his disciples Jnana Sinha and Uddyota Sinha. This is a remarkable instance of the adoption by Buddhist monks of names formed with the same compound as the names of their spiritual fathers, to which I had already previously, in paragraph (17), occasion to allude. A fragment of another identical inscription was lying close by. The modern temple at this place contains a large standing figure of Tara, now worshipped as Bhagavati, and carefully hidden by a yellow piece of cloth, which the priests at first refused to remove, under the pretext that the lady had to be kept in *purdah*; but they yielded to my request later on. Many minor images are collected at this temple, and at some distance stand in the open field a large Buddha, and Vishnu on Garuda. I observed also a broken Suraj Narain, a peculiar form of linga, with small figures of Siva, Surya, and Lakshmi.

23. *Konch Pali, Utren, Deo, and Umga.*—I have grouped these places together, because I consider it evident that the temple at Konch is of the same period as the temples at Deo and Umga. The resemblance in style is remarkable. It originally had in front a flat-roofed pillared hall or mandapa, which still may be seen on an old photograph, taken by Mr. Peppé, but which now has fallen in, the stone pillars supporting it, still lying in front of the temple. The same is characteristic for the temples at Deo and Umga and the ornamentation of the spire at Deo also is of the same kind as at Konch. The temple at Umga is plain, without ornaments. Moreover, tradition points to Bhairavendra, who lived about 1450 A.D., as the builder of the Konch temple. From his time also date, as we know from local inscriptions, the principal monuments at Deo and Umga. For these reasons, I think that the hitherto accepted date of the Konch temple, *viz.*, eighth century A.D., should be put back for some seven centuries. The temple at Konch is not in a good state of preservation; although repaired some time ago, a great portion of the brick wall in front of the spire has fallen down. The building is worth being kept in a permanent state of repairs.

Inside the temple, the most remarkable piece of carving is a slab representing the Avataras or incarnations of Vishnu. It is distinguished from other similar representations by dividing the Vamana Avatara into two scenes, by leaving out the ninth or Buddha Avatara, and by representing Vishnu in his tenth or Kalki Avatara in the company of a female deity, with a small horse standing in front of them. I am unable to suggest a reason for these peculiarities. Other statues, also Buddhistic images, and remains of other minor temples abound at this place.

Pali and Utren are two small places near Konch, where some remains of no great interest may by seen. The temple at Pali is almost entirely gone, only some pillars and a statue of Brahma still standing amongst its brick ruins. At Utren are the remains of an old fort, probably Muhammadan, with a Muhammadan dargah.

Umga contains a great number of temples on the rocky spur close to the village, mostly in a very ruinous state, with the exception of the principal one, which stands lowest on the hill and closest to the village. The inscriptions found there have already been mentioned; they help us to settle the date of these monuments. Besides, they contain a list of fourteen local Rajas down to Bhairavendra (1450 A.D.) He died childless, and his widow adopted two Rajputs who happened to come to Umga on a pilgrimage to Gaya. Some 150 years hereafter, the family removed their residence from Umga to Deo, where they still reside. Traces of the old palace near Umga may still be seen. The temple at Deo probably dates from this time, although local tradition gives it a fabulous age. It is in very good preservation, and still in use. Among the sculptures collected inside of it, the prevalence of

the Suraj-Narain symbol deserves to be noted. The temple is dedicated to this deity, as also the principal temple at Umga.

24. *Pachar, Cheon and Deokuli.*—These places are all close to Rafiganj. The principal object of interest is a cave in the southern face of the Pachar hill. It is a natural fissure in the rocks, the opening of which has been closed by a brick-wall, giving access to the cave through a small, stone-faced door. In front of it stands a portico, resting on stone-pillars. Inside the cave is a large statue of Parsvanatha, seated, and other minor images, evidently all Jain. I could find no traces of any Buddhist remains in this cave, and it evidently belonged to the Jains. An inscription on its wall in rather modern characters says that a certain person, whose name could not be read, worships constantly Parsvanatha. The existence of a Jain sanctuary in this locality is of some interest on account of its isolation. All other remains at Cheon, Deokuli and neighbouring villages are either Hindu temples or Muhammadan mosques and dargas. They are of very little importance and need not be detailed here. Close to Cheon, in the open field, stands a rather well preserved large statue of Hari-Hara.

25. *Kurkihar, Punawa, Hasra Kol and Bishenpur.*—The extensive remains near Kurkihar still yield a great number of fine Buddhist images. A large collection of these may be seen in the modern village temple. Others, recently found, are now placed inside the zamindar's bungalow. These it will be possible to remove to Calcutta, where other statues, previously found there, have already gone to. The great mound south of the village is also an extensive quarry for bricks, and is dug into by the natives of the place at random. It is a great pity that never any judiciously devised excavations have been carried out at this place. It is a promising site, and the work would be worth undertaking. The vandal digging for bricks, which is now going on there, is likely, in course of time, to destroy all that exists.

This has happened already at Punawa, a place close to Kurkihar, where now scarcely anything exists. The remains of the temple of Triloknath, described by General Cunningham, have all been carried away since by the local zamindars, and nothing is left of them.

Hasra Kol has been identified recently by Dr. Stein with the Kukkuta-pada-Vihara, or the cock's foot monastery, mentioned by Hiuen Thsang, which Cunningham erroneously located at Kurkihar. The valley between the two parallel ridges of hills abounds in ruins of ancient temples, &c., evidently both Hindu and Buddhist. A detailed survey of this area will be worth undertaking, as very little is yet known about it, and no accurate description exists. Three very fine Buddhist statues, said to have come from the Hasra Kol, are now placed inside a wretched small brick-house in the neighbouring village, Bishenpur. The principal figure is a large seated Buddha, with two attendants, one being Maitreya, the future Buddha, and the other evidently some form of Avalokitesvara. They are the finest specimens of Buddhist sculpture of the Pala time that I have seen, and for this reason it is a matter of regret that they are now hidden away at such an out-of-the-way place, where they are hardly accessible to any student of Art. I shall accordingly later on submit a special proposal for their removal to the Indian Museum.

26. *Afsand and Parabati Pahar.*—The big statue of a boar at Afsand, representing the Varaha Avatara of Vishnu, is one of the most interesting remains in the district. Its style, as well as its material, grey sandstone, distinctly point to the Gupta period. It closely resembles the boar statue at Eran, in the Central Provinces, which belongs to the same period. The earth, represented as a female, grasps one of the boar's tusks in order to mount the boar's neck. The whole body of the boar is covered with small figures of Rishis, represented generally in worshipping gestures. The statue stands in front of a high brick mound, evidently the temple of Vishnu, built by Adityasena, one of the later Guptas of Magadha, of about 600 A. D., whose long and important inscription, found at the same place, has become lost, it appears, soon after Major Kittoe discovered it and took a copy of it. His copy fortunately still exists. The structural remains of this temple, which are now buried below this mound, seem to be fairly well preserved, and a judicious excavation of the mound probably will reveal a great deal

of the ancient building. It would be a work worth undertaking, as Hindu temples of such a remote period are very rare and as, in this province at least, scarcely any remains of the same kind exist, which seem to be such a promising field for excavation. Other later statues are seen close to the mound, all were Hindu images, and I found no Buddhist statue at this place.

The remains at Parbati Pahar are of very little interest. They consist principally of the dargah of Haji Chand, Saudagar on the hill, a small insignificant building, occupying, as it seems, some ancient Buddhist site. Many heaps of bricks, also a few images, are found all over the hill and around the village.

27. *Miranpur Nadera, Jaru, Hasanpur Kako.*—The remains at these places are the only Muhammadan buildings inspected by me in the district of Gaya. The first two places are in the vicinity of the Barabar Hills, the last place lies some 5 miles to the east of Jahanabad. The dargah of Miran Shah at Nadera and some mosques close to it seem to be rather modern, and afford little of interest. They are kept in permanent repairs, and covered with white-wash. On one of the tombs I observed a linga put up against the head end. The mosque at Jaru is a building of the Moghul period It can, on no account, be anterior to Sher Shah's time, but I am inclined to consider it as later. It is built partly of brick and partly of granite stones. Every detail of its ornamentation, which is not without taste, points to the Moghul period. It has three domes, and three prayer niches in back wall. The dargah of Bibi Kamal at Hasanpur Kako is very modernized, and little remains of its ancient structure. Fragments of glazed tiles, now placed in the walls, show that it must have been a monument of some consequence. No information with regard to its date is available. Fragments of some Arabic or Persian inscriptions on tiles are now placed over one of its gates, but they are not *in situ* and give no connected reading. Another inscribed stone slab is too much defaced to be read. A second mausoleum, called chota dargah, at the same place, deserves no mention.

D.—PATNA DISTRICT.

28. *General remarks.*—A number of the ancient remains in the district are of the same order as those in the district of Gaya. The modern city of Patna, Hilsa, Telara, Bihar, and Maner contain prominently and almost exclusively Muhammadan monuments. The dargah at Maner is one of the finest buildings of the Moghul time in this province. The ancient monuments inspected by me in the district of Patna will be described in the following order:—

Ancient Pataliputra and modern Patna;
Rajgir and Giryek;
Silao, Jagdispur and Baragaon (Nalanda);
Ghosrawan, Tetrawan and Pawapuri;
Hilsa and Telara;
Bihar;
Maner.

29. *Ancient Pataliputra and modern Patna.*—The remains of ancient Pataliputra, the capital of Asoka, which, for some years past, have formed the object of extensive excavations, lie partly to the south of the East Indian Railway line, partly under the modern towns of Patna and Bankipur. The result of these excavations cannot be said to have answered the rather sanguine hopes, which some eminent Indian archæologists, such as the late Professor Bühler, has entertained with regard to them. However, some of the ancient sites mentioned by the Chinese pilgrims have now been located with more or less certainty, and some fragments of ancient sculpture found during the excavations show that perhaps later on a day may come, when this ancient place will yield some important finds. The huge, solid mass of bricks, now buried under the Choti Pahar, evidently represents the ruins of a Buddhist stupa of great age, but the various excavations, which have been carried on there down to a considerable depth below surface, have brought to light no object of any interest. Another larger mound close to it, called the Bari Pahar, has not been dug into. The modern Agam Kua, a large well, evidently stands on an ancient site. Some 15 minutes distant from it stands an ancient carved

stone showing on each side a female standing, and holding the branch of a tree. Close to it lie the fragments of an Asoka pillar, which have been found during the excavations. Although no inscription is on them, yet their polish as well as the material, sandstone, so closely resemble the other Asoka pillars, that no doubt can be entertained with regard to this find. A large capital of Greek style of the Ionian order also was brought to light during the excavations. It was placed inside the golah at Bankipur, but at the time of my visit, it was no more there, and nobody seemed to know anything about it.

The oldest monument among the ancient buildings of the modern city of Patna, which are exclusively Muhammadan, is the mosque of the time of Sher Shah. There is no inscription on it, but there is no reason to doubt its traditional date. It is built of bricks, and covered by one large dome in centre resting on an octagonal spring. In each corner is a smaller dome, and between these four smaller domes, on each side, are one larger and two smaller vaulted roofs. The back wall has three prayer niches. Some repairs have been done to this mosque, but it is still in bad order, and some more might be done, as the building is remarkable on account of its style. Outside the mosque are a number of tombs, mostly modern. The oldest are the tomb of Koka Khan, who died in 1772 A. D., and of Mirza Aziz, who died in 1808 A. D. Another mosque, called Pather-ka-masjid, is of some interest on account of its inscription, which tells us that it was built by Parwez Shah, the son of Jahangir, out of the materials of the fort Majauli and a Hindu temple, which he had destroyed. Its date is the Hijra year 1036, which began on the 22nd October 1626 A.D. Numerous other mosques and dargahs call for no remarks here, except that some of the ancient carved stones from Gaur, in the district of Maldah, are found built into them, as also into private houses. These materials have been carried away rather a long distance.

30. *Rajgir and Giryek.*—Rajgir, the ancient Rajagriha, the first capital of Magadha, is now principally a sacred place of the Jains, who come there in great numbers from far away. They visit all the shrines on the tops of the five hills. These shrines are all of very recent date. They generally contain a stone with the foot-prints or padukas of some Jain Tirthankar. Older ruined shrines of the middle ages are also found there, but they no longer from an object of worship. Numerous Jain images are seen inside of them. I think the Jains had settled there already from the beginning of our era, as I believe that the famous Sonbhandar, or Gold Treasury cave, at the southern foot of the Baibhar hill, was made by a Jain monk for the use of his own sect. This I conclude from an inscription in the outside wall of the cave. It is a Sanskrit verse, telling us that the famous teacher Muni Vairadeva made two caves which are a suitable resort for ascetics who wish to attain to nirvana, and which are renowned on account of Arhants. The two caves referred to in this inscription can only be the caves where the record is engraved; in fact, there are two caves there close to each other, one the so-called Sonbhandar, and the other now in ruins. The mention of the Arhants, as also other technical terms in this inscription, distinctly point to the Jains. There is, moreover, just below the inscription a now mutilated carving of Jain Tirthankar of apparently the same period. The period of the inscription may be stated as the 3rd century A.D. on account of the shape of its writing. As the caves at the time when the Chinese pilgrims visited Rajgir probably were still occupied by Jain monks, we may assume that they have been left unnoticed by them, as, for a similar reason, the caves on the Barabar and Nagarjuni hills (see above paragraph 19), and we need not try any further identification of them with some of the sacred Buddhist sites mentioned by the pilgrims. I need scarcely remark here that General Cunningham's identification of the Sonbhandar cave with the Saptaparna cave, the traditional site of the first Buddhist Synod, has never met with any approval. The latter site, in all probability, is identical with the large natural caves near the top of the Baibhar hill, on its northern face.

A detailed and systematic exploration of all the hills near Rajgir, which seems to me worth undertaking, probably will bring to light more Buddhist remains, which at present are comparatively scanty. To the Hindus the hot springs at the foot of the Baibhar hill now form the principal object of

worship. There is also an old ruined temple of Mahadeva on the same hill, close to the old Jain temples.

The stupa at Giryek is undoubtedly a Buddhist monument of considerable age. If some clearing of rubbish around it could be done, it would be easy to prepare a good drawing of this important monument, showing its restoration to scale. The drums upon which the large hemispherical dome rested appear to have been comparatively low; they were probably only from three to five in number. They again rested on square terraces, divided by small pilasters in several niches or recesses Some of the surface ornaments are still well preserved. They exhibit various patterns of flowers. The stupa was built entirely of bricks. A hole has been dug into it from the western side to take out the relic deposit. But, as shown by General Cunningham, the building was evidently a memorial stupa, and did not contain any relics. It is the best preserved building of its kind in my circle, and a good drawing of it seems desirable; but it can only be prepared by help of excavation of the *débris* around the stupa. Close to it exist the remains of a water reservoir, and at a little distance to the west there are extensive brick ruins, the remains of a monastery or vihara, which was connected with the stupa by a pathway, which still may be traced This monastery is now in too ruinous a state to allow of forming an opinion as to its structure without making extensive excavations.

31. *Silao, Jagdispur, and Baragaon (Nalanda).*—Silao, which is an important village on the road from Rajgir to Bihar, is mentioned here merely on account of some ancient stones with Buddhist carvings which have been used as building materials for the principal mosque of this place. Jagdispur is only a short distance from Baragaon. It contains a very interesting large statue of Buddha, which, with minor images, now stands on the top of a low mound, apparently the *débris* of a Buddhist temple. This statue shows Buddha attacked by Mara and his army, and around this are seven minor relief scenes representing other events in the life of Buddha. His nirvana is represented at the head of the image. Similar statues are by no means rare among the Bihar sculptures, but the relief scenes on them as a rule show Buddha, the principal figure, only, with not more than one or two attendants, while on the Jagdispur statue each relievo exhibits a great number of attendant figures. This seems to point to a greater age of the Jagdispur statue than that of the bulk of Bihar statues, as it resembles more the character of older Buddhist sculptures, such as those from Gandhara. Some of the figures with animal heads in the army of Mara also remind one of similar ones in well-known Gandhara carvings, and in the nirvana scene we observe above some hands without a body playing drum and cymbal, representations of the heavenly music which filled the air at all the great events in Buddha's career, a motive which is also frequently met with in Gandhara art.

The high mounds which now bury the principal buildings of the once famous Nalanda, near the modern village of Baragaon, may be seen for a long distance. Some of the principal mounds have been dug into previously, but, unfortunately, no records were kept, and no good accounts are available with regard to these excavations. Other mounds have remained untouched, and some of them seem to be promising sites for excavation. The buildings here do not seem to be in such a ruinous state as to have been reduced to mere heaps of bricks. A detailed and systematic exploration of the whole area seems very desirable. Among the Buddhist statues here, the most remarkable is an image of Buddha seated with an attendant on each side, and two flying figures holding garlands above. It is notable for one reason, *viz.*, because to each of these four minor figures is added a short inscription, which tells us the name of the person which it is meant to represent. This is unfortunately very rare in Buddhist statues, and the work of identifying all the numerous representations from the Buddhist Pantheon consequently labours under great difficulties. We here recognize, by means of those inscriptions, the two attendants below as Arya-Vasumitra and Arya-Maitreya, while the two flying figures above are Arya-Sariputra and Arya-Maudgalyayana, the two principal disciples of Buddha. No objection can have been raised against representing them in such a posture, as, being Arhaûts, they were possessed of the power of flying through the air.

In the village of Baragaon is also a modern Jain temple with some ancient sculptures, which is now visited by some of the Jain pilgrims on their way from or to Rajgir.

32. *Pawapuri, Ghosrawan, and Tetrawan.*—Pawapuri is a very holy tirtha of the Jains, it being the place where, according to their tradition, the last founder of their sect, Vardhamana Mahavira, attained to nirvana. It contains absolutely nothing ancient. The large temples here are all modern and are of no antiquarian interest. It lies close to the Bihar-Nawadah road.

Ghosrawan and Tetrawan are both some three or four miles distant to the east, and can only be reached *viâ* Pawapuri. Both places must once have contained large Buddhist settlements, as a great number of Buddhist statues are now collected inside of them, which evidently have been dug up in the neighbourhood. At Ghosrawan some ruined brick mounds are still to be seen; also a big mud fort. The principal figures at Tetrawan are a colossal seated Buddha, now on a brick terrace at the southern border of a large tank, outside the village; also a large statue of Marichi, in one of the modern temples there. A short inscription on a small Buddhist statue at the same place is of some interest, as it probably contains the old name of the village. It says that the statue was the gift of Tantava Ateka. This may be interpreted as Ateka from Tantava, and the latter may be an older form of the modern Tetrawan.

33. *Hilsa and Telara.*—The dargah of Shah Juman Madari at Hilsa is a place of far-reaching fame. It is a simple, square brick building, covered by one dome. It has one door only, in its southern wall. The three other walls have each one prayer niche inside. There are seven tombs inside, of which the westernmost is said to be that of the saint. An inscription over the gate, the date of which corresponds to the 3rd June 1543 A.D., tells us that in the time of Sher Shah the tomb (gumbaz) of Miran Sayyid Juman Madari was repaired by order of Miyan Shaikh Alam Adam Shah Juman Madari, at the expenses of Darya Khan Zangi, an officer of the body-guard. The original building thus appears to be older than 1543 A.D., but it cannot have been much anterior, as Shah Madar, the founder of the Madari order, to which the saints mentioned in the inscription belonged, is said to have been a contemporary of Ibrahim Shah of Jaunpur, who reigned from 1400 to 1440 A.D. Another inscription refers to the building of a mosque near the dargah, by a person called Riza. Its date corresponds to 1604 A.D., and it is of some historical interest, as it refers to Jahangir, who is called Shah Salim, as the reigning King. His father, Akbar, was still alive at that time, but Jahangir was already in open rebellion against him. He already then struck coins, with the name Salim, of which numerous specimens exist. The mosque, built by Riza, is no longer in existence, and the present one is an insignificant, modern building. The dargah is kept in fair order.

Telara, the ancient Tailadhaka, is the site of a famous Buddhist monastery, of which, however, very little remains. Some ancient stones have been used as building materials for the mosque there, which is called the Sangi Masjid, and for the dargah of Sayyid Yusuf Abdal, close to it. Both stand on a high mound, apparently the site of some Buddhist building. On one of the stones, which is now used as a lintel over the door to the mosque I found the ancient name of the place, Tailadhaka, written in characters of the Pala time. Inside the dargah is an inscription of Sher Shah's time, which has become very much defaced. Both the mosque and the dargah are of no special interest.

34. *Bihar.*—The only Hindu remains in Bihar are the sandstone pillars, now put up in the Subdivisional Officer's compound. One of them bears an important Sanskrit inscription of the time of the Gupta kings. It has been put up upside-down, apparently because, below the inscription, no vacant space remains to afford a support for the pillar.

The fort is in utter ruins, but traces of its walls, &c., remain. A gateway, which was still standing some 30 years ago, has now entirely broken down. Ancient Buddhist carvings have been used in building the various mosques and dargahs, which now adorn the place. The principal dargah is that of Malik Ibrahim Bayyu, who, according to the inscriptions on its walls, died on the 20th January 1353 A.D. It stands on the top of the Bihar hill and closely

resembles the dargah of Juman Madari at Hilsa (paragraph 33). The curved battlement, which is so common a feature in similar buildings of the same period in Bengal, is not met with here; in fact, this peculiarity seems to have been confined to Bengal only. The tomb of the saint is in the centre, with ten smaller ones around it. The dargah is in a fair state of repairs. Other dargahs have no domed buildings, but consist merely of open tombs, with mosques, musafirkhanas, and other houses in their compound. The principal ones are the dargah of Sharafuddin, Qadir Qumaish, and Shah Ahmad Charamposh. The dargah of Qadir Qumaish contains merely buildings of very recent date, not more than sixteen years old; but some ancient carvings may be seen here. The dargah of Shah Ahmad Charamposh has an ancient gateway, coming from some Buddhist or Hindu temple, with elaborate delicate carvings. Some of the carvings have been chiselled off, and Persian verses, expressing moral and religious precepts, have been engraved in their place. The Juma mosque was built in the time of Akbar, at the instance of Said Khan, who was Governor of Bihar from 1004 to 1010 Hijra era. The date of the inscription is the Hijra year 1004 which began on the 6th September 1595 A.D. Said Khan is said to have had a special passion for eunuchs, of which he had 1,200. One of them, Ikhtiyar Khan, who acted as his Vakil, was the builder of this mosque. Another mosque was built in Shah Jahan's time by Habib Khan, an Afghan of the Sur clan. Its date is the Hijri year 1047, which began on the 26th May 1637A.D. There are other mosques of the same period, but they have no inscriptions. All these buildings are generally in a fair state of preservation. Numerous ancient Muhammadan inscriptions have been carried away from Bihar to Calcutta; others are still lying inside the principal dargahs. They all have been deciphered and translated previously.

35. *Maner.*—A special report on the Maner tombs has been submitted in my letter No. 12, dated the 17th February 1902. There are two tombs at this place, viz., that of Shah Daulat, called the choti dargah, and that of Shaikh Yahya Maneri, called the bari dargah. The former is a very fine building, the best specimen of a mausoleum of the Moghul style in this province. The stone carvings on its walls are of a delicate taste and high finish, and by this it far excels the widely famed mausoleum of Sher Shah at Sasseram (see paragraph 39), which, on the other hand, is of grander and more imposing outlines. Good photographs and drawings of the mausoleum at Maner should be prepared, with a view to publication. The saint died 1017 A H. (=1608A.D.); the mausoleum was completed in 1025A.H. (=1616A.D.); the mosque inside its compound was built by Ibrahim Khan in 1028A H. (=1619A.D.), while the gateway bears an older inscription, the date of which corresponds to 1603-4 A.D. Ibrahim Khan was then Governor of Bihar. He also built the mosque near the bari dargah of Shaikh Yahya Maneri; the date of its inscription corresponds to 1605-6A.D. It is at present in a ruinous state, but not worth repairing. The mausoleum of Shah Daulat, the choti dargah, is in very good order and regularly looked after by the Public Works Department. Its gateway is becoming dilapidated and the roof of its mosque had to be supported by wooden beams, as it became unsafe. I did not consider it necessary in my previous communication to recommend any further repairs to it.

Outside these two dargahs I found some other tombs, one with an inscription, the date of which corresponds to 1575-76A.D. It is in a ruinous state.

E.—DISTRICT SHAHABAD.

36. *General remarks.*—In coming to the district of Shahabad from the neighbouring district of Gaya, the traveller is struck with the absence of Buddhist remains, which suddenly seem to disappear, as soon as one crosses the Sone. In fact Buddhism when it flourished in Magadha from 800 to 1200 A.D., does not seem to have extended beyond that river. Wherever, in the district of Shahabad, I found some fragments of ancient statuary collected under the village pipal tree, I hardly anywhere observed Buddhist sculptures among them, and those collections too, are not as frequently met, as in the district of Gaya. There is, however, one very ancient Hindu

temple at Mundesvari in the Bhabua subdivision of the district of Shahabad which, I think, cannot be later than 600 or 700 A.D. It is evidently the oldest and most important building of its kind within this province. The principal other buildings belong to the Muhammadan time, especially the tombs at Sa-seram and Chainpur, and the hill forts at Rohtas and Shergarh. The ancient monuments inspected by me in the district of Shahabad, will be dealt with in the following order:—

The temple of Mundesvari;
The remains at Tilothu and Tutrahi;
The remains at Sasseram and Chainpur;
Rhotasgarh;
Shergarh.

37. *The temple of Mundesvari.*—This temple stands on the top of a hill close to the village of Ramgarh, 7 miles south-west of Bhabuah. It appears to have been a square outside and an octagon inside, covered by a pyramidal roof. The principal entrance was from the east through a door, which originally had a pillared porch in front of which, however, only a few pillars are still standing. There was another door in the western wall, while the northern and southern walls each had one latticed stone window. The northern one is still well preserved, and the carvings around it are of exactly the Gupta style. Their design is very tasteful. The temple was built entirely of stone, and is now in a very ruinous state. Many of the stones have fallen down, and now form a huge pile around the temple. I am afraid, to put it into proper repair, would be a very costly matter, and I have for this reason not yet submitted a special report on it. But I intend doing so later on, as Hindu temples of such a high antiquity are very rare, especially in this province, and as, for this reason, it seems desirable to have the building tested by an experienced architect, who would be able to pronounce an opinion as to what can be done to it, and at what cost. My statement with regard to the age of the temple is based partly on the form of the writing which is found all along the way up to the temple incised on the rocks, evidently pilgrims' records, partly on the style of its carvings, and of various ancient statues found among the *débris* around the temple. Among the latter I observed a statue of Siva, which still shows the phallic emblem of the god. As I have observed already previously, this is decidedly a sign of antiquity, for, in later periods, this mark was left out in statues of the god. Inside the temple now stand a large Chau-mukhi Mahadeo, and a statue of Durga, both of later date than the temple. Various other remains, partly of brick buildings, are seen all along the eastern slope of the hill, also some rock carvings, apparently of ancient times.

38. *The remains of Tilothu and Tutrahi.*—Tilothu is a large village, half-way between Sasseram and Rohtasgarh, where the two roads from Sasseram and Dehri meet together. Its large Hindu temple is modern and of no interest. Among the numerous Muhammadan mosques and dargahs, which I saw at this place, the oldest is a mosque of the time of Aurangzeb, the date of which corresponds to 1677 A.D. The builders of the mosque are called Golha and Haitam. The mosque is of no special interest. The place is, however, already mentioned in older records, and from the inscription on a tomb at the foot of Rohtasgarh from the beginning of 1638 A.D., we learn that it was a part of the jagir of Ikhlas Khan, who was then the Qiladar or commandant of the Rohtas fort

Tutrahi is about 5 miles west of Tilothu. It is a place where the neighbouring range of hills forms a knee. Here a small streamlet of water runs down the precipitous cliff, and collects into a pool in front. It is for this reason that the place has become an object of worship. High upon the rocks, on a small natural terrace, a small statue of Mahishamardini has been put up. In an inscription close to it, which apparently refers to the consecration of this image, she is spoken of as Jagaddhatri. This inscription is evidently several centuries later than other records, which are found at the same place, around a crude, rock carved figure of a female deity, and the date of which, as calculated by me, corresponds to Saturday, the 19th April, 1158 A.D. The inscription is one of the Nayaka Pratapadhavala, a local chief of whom we possess other records from Rohtasgarh and the Tara Chandi rock near Sasseram. He appears to have made a pilgrimage to the Tutrahi falls

accompanied by his whole household, for, besides his own name, he mentions his brother's wife, Sulhi; Tribhuvanadhavala, Somali, Lakshmaditya, and Padmaditya, persons whose rank is not specified; his sons, Satrughna, Viradhana, and Sahasadhavala; five female slaves, called Luduma, Nayakama, Alhi, Puttriki, and Ekali; his treasurer, Devaraja; his door-keeper, Vimala, and his Court Pandit, Visvarupa, who remarks that he constantly meditates over and praises the goddess.

39. *The remains at Sasseram and Chainpur.*—The most ancient monument at Sasseram is the Asoka inscription which is found inside a small natural cave on the top of Chandan Pir's hill to the east of the modern town. The inscription probably contains a date referred to the death of Buddha; but the passage still remains a great puzzle, and no absolutely convincing interpretation has yet been found. Other versions of the same edict exist at Rupnath in Central India; at Bairat, near Jaipur, and at Siddapur in the Mysore State. The hill where the inscription is incised evidently was an old Buddhist site, which appears to have been appropriated later on by the Muhammadans. They now worship there at the dargah of Chandan Pir, a saint of whose life and history they know absolutely nothing, although they insist upon his being called Shahid, or martyr. A small building close to the dargah was erected by Faqir Muhammad Chaudhuri, a tobacco seller Its date corresponds to the 28th January 1804 A. D. A ruined mosque of the time of Jahangir, at the foot of the hill, bears a date which corresponds to 1613 A.D.

The magnificent mausoleum of Sher Shah inside the town, and the other smaller one of his father, Hasan Khan Sur, east of it, are among the most important ancient monuments in this province. When the tomb of Sher Shah was restored some time ago by order of Government, the small cupola, which originally was placed on the top of the big dome, was pulled down and replaced by a pinnacle similar to that on Hasan Khan's tomb. Why this was done, I am not able to understand. It can hardly be called a restoration, and such an example should never be followed in carrying out a work of this kind It has been proposed to close the doors and windows of both mausoleums by wire-netting, in order to prevent bats from entering, and I recommended this proposal to be sanctioned. When I was at Sasseram, the work had not yet been taken up. On a bright day in the cold weather, bats will hardly enter, as the interior receives too much light to afford a pleasant resort for those animals; but on rainy days they seem to like seeking shelter inside, as I could observe at my subsequent visit to the tomb, when it had been raining heavily for two or three days. The dome of the mausoleum of Sher Shah also seems to be leaking.

No repairs can be done to the unfinished tomb of Islam Shah or Salim Shah and to the tomb of Alawal Khan. The latter has some fine carving around its principal door. It is said to be a building of Sher Shah's time, but this seems doubtful. The Idgah near Sher Shah's tomb, was built by Mujahid Khan in the time of Shah Jahan. The dates of its four inscriptions cover the period from the middle of 1633 to the middle of 1636 A. D. It seems very unlikely that it has taken such a long time to complete a small building of this kind, and I do not understand the difference between the four dates. There is also at Sasseram an ancient private house called Nawab's Garh, which is now in a very ruinous state, and a Turkish Bath, which may be old as local tradition asserts. Other buildings there are modern, and call for no remarks.

At Chainpur, the principal monument is the mausoleum of Bakhtiyar Khan. As I shall later on submit a special report on this tomb, I need here only say that it is an exact counterpart of the mausoleum of Hasan Khan at Sasseram, but of larger dimensions, and with a small cupola, instead of a pinnacle, on the top of its great dome. It is just on the verge of falling into ruins, and, if repairs are not done to it now, it will soon become destroyed. I consider these repairs worth undertaking, as it is the finest specimen of its kind, together with the tombs of Sher Shah and Hasan Khan at Sasseram. Many similar tombs of smaller size are seen all around Chainpur, but I need not go into details with regard to them. The fort at Chainpur is evidently a building of the time of Sher Shah or Akbar, as seen by the style of its principal gate, the only portion of it that is still fairly intact. Inside the fort, there is a small Hindu shrine where a piece of stone is worshipped as Hamsu Brahma. I was told that it represents a holy man who, after death, had become a Brahma.

I have nowhere else met with this curious form of worship. The Juma mosque at Chainpur has an inscription the date of which corresponds to 1668-69 A.D. It is a building of no special interest, but looked upon with great veneration by the Muhammadans of the place, who are either too poor or unwilling to keep it in proper order.

40. *Rohtasgarh.*—The extensive remains of the hill fort at Rohtas are a very interesting specimen of this kind, and together with the similar ones at Shergarh, which will be dealt with in the next paragraph, they are decidedly unique in this province. No good photographs and drawings of the remains at both places exist, and it would be worth the while to prepare such with a view to publication. The principal remains are generally in a good state of repairs and regularly looked after. Some of the tombs, however, as also portions of the walls and fortifications will in course of time fall down entirely, and it partly seems impossible to prevent this, and partly the monuments are not of such a great value as to make it desirable to spend large sums of money upon them. There is, however, one private house of an officer of some standing close to the palace, which is still buried within jungle. It is the only building of this kind at Rohtas, and for this reason of some interest. It is a two-storied house with an open verandah, the roof of which was originally supported by pillars, but it has now fallen down. All that needs be done to it is to keep the place clear of jungle, to make the house easier accessible. The elephant gate of the place bears an inscription both in Sanskrit and Persian referring to the completion of the gate. The dates of both are identical, that of the Sanskrit portion corresponding to the 14th March 1597 A.D., and that of the Persian part to the 16th of the same month and year. When Blochmann translated the Persian inscription, he was misled by the word Alif, which follows the Persian text, and referred the date to the Alfi era, which would put it back to a later time. But the Sanskrit inscription clearly shows that the Persian date refers to the Hijri era. The inscription mentions the Purohit Sridhar; the darogha Bal Bhadr, a Brahman; and the architect Ustad Mubarak. We meet the same persons again in an inscription over the Kathautiya gate, the date of which corresponds to the 28th February 1607 A.D. Besides we find here mentioned Gopal Das Chauhan, who, with Sridhar, held the office of Shiqdar. This inscription also has a Sanskrit portion, but it is written in very small letters and put up very high, so that I was unable to read it, and I had no ladder with me at the time of my visit. The same unfortunately was the case with another inscription over the central arch of the Alamgiri mosque, which stands on the road from the palace to the Lal Darwaza. I think, however, I could read the date 950 Hijra era, and the name of Sher Shah. Also the words Sultan-as-Salatin seemed certain to me, and this shows that the king cannot have been a Moghul Emperor, as the title Sultan was never borne by them. The style of the mosque agrees very well with its supposed erection by Sher Shah. It is in a fair state of repairs, and worth being kept in order. There is only one other mosque close to the tombs, which was built by Habsh Khan, evidently a eunuch. Its inscriptions, which now lies inside the palace, bear a date corresponding to 1580 A.D. Tombs abound, but only one is inscribed, while on four others I noticed the vacant space for the reception of the inscribed tablet, which has been lost The date of the inscription corresponds to 1578 A.D., and it tells us that it is the tomb of Shafi Sultan, who died suddenly, when he was just expecting to be promoted to the rank of Khan. It has the finest specimen of stucco ornamentation on its back wall. Another large domed tomb closely resembles that of Hasan Khan at Sasseram. It is evidently the tomb of the darogha of Sher Shah mentioned by Buchanan. The tomb of Shafi Sultan, as others too, is remarkable for this reason that it is covered by a dome, supported on pillars. Similar structures are called Chattris in Rajputana, where they are frequently met with. Evidently they are an importation from this country, due perhaps to the fact that the garrison of the fort largely recruited from there. I have also observed similar tombs near Chainpur, but they are by no means frequent in Bihar, and never found in Bengal. Another importation from the North-West appears to be the octagonal open pillared hall, covered by a hemispherical dome, which stands in front of some of the Rohtas temples. tI is common in Rajputana and thereabout, but rare in Bihar. Of one of

the best temples of this class, which stands on the way to Rajghat, the porch has broken down, and is now lying in front of the temple. It would probably be very costly to put it up again. The two small temples in the south-eastern corner of the plateau, one of which is called by Buchanan the Chauri of Rohtas, are fine specimens of their kind, especially the small pillared hall, covered by five domes.

At the foot of the plateau there is a large tomb which consists of an oblong compound wall, the west side of which has inside a raised stone terrace and three prayer niches. The gate is in the northern wall. Inside are seven stone sarcophagi, standing on a stone platform. A tomb of this kind is called a Chardiwarrah or 'four-walled enclosure.' Over the gate is a long Persian inscription, which tells us that the tomb was built for himself and his family by Malik Wisal, the Darogah of the Rohtas Fort, in the time of Shah Jahan, when Ikhlas Khan was the Qiladar or commandant of the fort, with the rank of a commander of 3,000. It also mentions a number of parganas, which formed the jagir of Ikhlas Khan, among which we find the well-known names of Tilothu, Akbarpur, and Bilaunja, which are all close to Rohtasgarh. The tomb was begun on the 6th September 1636 A.D., and completed between the 17th January and 15th February 1638 A.D.

41. *Shergarh.*—This hill fort, according to Buchanan, was built by Sher Shah, after he had already begun fortifying the Rohtas hill, as the place seemed more favourable to him. It is covered with jungle and never seems to have been looked after. The ground around the palace, which is an interesting building, at least should be cleared. This must needs be done before measurements can be taken in order to prepare plans and drawings, which, I think, is desirable to undertake. Not even a complete and accurate account of the buildings there exists. My notes, which I took down on the spot, will enable me to add considerably to the meagre account in the List of Ancient Monuments in Bengal, if I should be called upon to prepare a revised edition of the same. I do not, however, intend here to enter into a lengthy description of details, but I shall merely mention such points as seem to me remarkable.

The plateau of Shergarh is much lower than Rohtas hill. It may be four miles in circumference. It consists of two elevations, divided by a depression of the ground, where there is a large tank. The palace or Qilah stands upon the highest of southern elevation. All along the edge of the plateau runs a stone wall with several bastions and fortified ghats exactly as that at Rohtas. The entrance to the palace leads through three strongly fortified gates. The palace, which is the principal building at Shergarh, consists of two square open courtyards, surrounded by four open galleries, which are supported by pillars in front, with only a few closed rooms. Owing to the peculiar shape of the ground, the southern courtyard is much higher than the northern one, and of the latter again the northern gallery is lower than the other three. Thus, standing on the roof of one of the galleries around the southern courtyard, one could overlook the entire northern courtyard, while a person standing on the roof of the galleries around the northern courtyard, could observe nothing that was going on in the southern compound. The people now believe that this arrangement was made because the northern court was occupied by the ladies of the zanana. They could thus easily be watched by the men, while they were prohibited from looking into the male compartments. Some of the carvings on the pillars, supporting the galleries, are of a high order and much better than anything of the same kind at Rohtas.

Another remarkable feature are the many underground rooms inside the palace. I observed five, but others seem to exist, which are now inaccessible. Most of them were dark, and received no light from above. They may have been used as store-rooms; one was used as a water-reservior. One room was well lighted by means of skylight. It is in the northern courtyard, the supposed zanana, and may have been intended as a place of retreat for the ladies in time of a siege or during the heat of the day. Before entering the palace gates one meets two open pillared halls, which are said to have been used as Diwan khana, or offices. I found only one mosque there, which is close to one of the gates leading into the palace. No temples are there, and the absence of any tombs is very remarkable. I was at first inclined to look upon this as a sign that the fort had been occupied for a short period

only, but it seems possible that some of the heaps of stones which are scattered all around the plateau may be the remains of tombs. I found absolutely no inscriptions. Altogether the place is deserving of being better looked after than at present.

F.—DISTRICT BIRBHUM

42. *The temples at Bakresvar.*—A special report on this place has already been submitted in my letter No. 13, dated the 18th February 1902 The place owes its sanctity to some hot, sulphuric springs, which here, as elsewhere in India, are looked upon as manifestations of some divine power. Around those springs, quite a small city of temples, enshrining lingas, has sprung into existence. The temples are generally very small; but one large temple stands in the centre, which has received some bad cracks, which will now be repaired at the cost of the Sebaits. All the temples seem to be comparatively modern, and the dates, Saka years 1677 and 1683, corresponding to A.D. 1755 and 1761, which I found in two Bengali inscriptions on tiles, may well represent the age of establishment. Altogether the place is of not more than local interest.

G.—DISTRICT HOOGHLY.

43. *The remains at Tribeni and Pandua.*—The remains at these places consist of the dargah of Zafar Khan Ghazi at Tribeni with an old mosque close to it, and of the Minar and large mosque, and the dargah of Shah Sufi Sultan at Pandua; the latter also has an old mosque standing close to it. I have submitted a special report on these remains in my letter No. 16, dated the 19th February 1902. My proposals as to the repairs of these buildings principally concern the Minar at Pandua. The fifth storey of this tower, together with the pinnacle, has fallen down, and I have suggested to restore it, as the monument, though not very tasteful in its outlines, certainly is unique in this province. An ancient lithograph, which still shows the building complete, will enable the Engineer in charge to do this with accuracy The Minar is evidently an imitation of the famous Qutub Minar in Delhi. Its accurate date, as well as that of the mosque close to which it stands, is not known, but it may well belong to the time of the Muhammadan conquest of the place, which occurred about 1300 A.D. Close to the dargah of Sufi Sultan, which is an insignificant, modernized building stand two mosques, one built in the time of Shamsuddin Yusuf Shah in 1477 A.D , and the other built by Fath Khan, an Afghan of the Sur clan, in 1727 28 A.D. I have suggested that petty repairs might be done to the old mosque near the dargah of Sufi Sultan and to the big mosque at Pandua, to prevent those parts of them that are still standing from complete destruction.

The mosque at Tribeni is evidently the oldest mosque in Lower Bengal, and I have suggested that it might be kept in proper order. The dargah of Zafar Khan Ghazi is remarkable on account of its showing many ancient Hindu carvings: here, as in Pandua also, the spoils of Hindu temples have largely been made use of as building materials. Inside even some Bengali inscriptions may be observed, such as the killing of Ravana by Rama, the marriage of Sita, Sita's exile and similar ones. Only petty repairs have been suggested by me with regard to this building.

H.—DISTRICT PURI.

44. *Remarks on the repairs done to the Black Pagoda at Konarak, the temples at Bhubaneshwar, and the caves at Khandagiri*—I am glad to report that the excavation around the Black Pagoda at Konarak, which was taken up at my suggestion, has greatly improved this important but long neglected monument. As at present sanctioned, it will be carried on up to a line running through the northern and southern doors of the Mandapa, thus the whole front part of the temple compound will be laid open, down to the original level of the ground. When I was there, the northern side of the basement and staircase had been disclosed. It shows three large wheels, and in front of them three horses. The corresponding southern portion will have similar wheels and horses.. The temple was thus represented as the chariot of Sun-god, drawn by his seven chargers. Two oblong platforms also had been laid open in the

north-eastern corner of the courtyard, apparently used for bathing the images. The stones, which had become loosened, are carefully collected around the temple and it will later on be possible to put up some of them in their original places. When the work, which is now being done, has been finished, it will be necessary to decide whether the excavation should be carried on further to the southern half of the temple court.

At Bhubaneshwar, the following repairs were carried on at the time of my visit:—

(*a*) The temple of Meghesvara, which is called by R. L. Mitra the Bhaskaresvara temple, is being repaired. I suggested this on the ground that this temple is unique on account of its style;

(*b*) The four minor temples in the courtyard of the Brahmesvara temple are being repaired. The temples have to be dismantled and put up again by using partly their own materials, partly others from neighbouring shrines, which it is not intended to preserve;

(*c*) The Raja-Rani temple is being provided with a stone fencing;

(*d*) The minor temples near the Muktesvara temple are under repairs, and the tank close to it has been emptied and is being provided with a new stone facing. After the completion of these repairs, the place will look very neat and tidy;

(*e*) The repairs to the roof over the porch of the Parasuramesvara temple are not yet finished, but they will soon come to an end;

(*f*) The repairs to the Sahasralinga tank had just begun, and the tank was emptied;

(*g*) Some repairs were done to the minor temples within the courtyard of the Lingaraj.

If it should be intended to do some further repairs to other temples at Bhubaneshwar, I would suggest that something might be done to the Bhaskaresvara and Yamesvara temples, also to a small temple close to the Vetal-Deul, which is an exact copy of the Parasuramesvara, and to the Ananta Vasudeva temple. These are the finest specimens among those temples, which have not yet received any repairs. Some temples like the Brahmesvara and Muktesvara, have very fine carvings inside, which are now covered with soot. It would be well to clean them.

The repairs done at Khandagiri are as follows:—

(*a*) The carvings in the Rani Gumpha, Ganesa Gumpha, Ananta Gumpha, and Nava Muni Gumpha have been cleaned, as suggested by me, and this has greatly improved them;

(*b*) The two elephants, flanking the stairs of the Ganesa Gumpha, are put up in their original position;

(*c*) The Hathi Gumpha inscription is being provided with a shade, which, I trust, will help to preserve that, what remains of this important record, which, unfortunately has suffered badly from the effects of sun and rain;

(*d*) The Tantua Gumpha has been repaired, and the cave below it will also be put in proper order. They are on the northern slope of the Khandagiri peak, where a good deal of the jungle has been cleared;

(*e*) A modern temple, close to the Nava Muni Gumpha, has been pulled down, as it had become unsafe. The building was of no interest, and its destruction is absolutely no loss.

I.—DISTRICT KHULNA.

45. *The remains near Bagerhat.*—The remains here consist principally of the dargah of Khanja Ali and the Sat Gumbaz mosque. Khanja Ali is the local form of the name, but in the inscriptions around his tomb, he is merely called Khan Jahan. He is said to have been the cultivator of the Sundarbans. According to the inscriptions on his tomb, he died on the night of the 26th Zil Hijjah 863, that is, the night of the 23rd to 24th October 1459 A.D., and he was buried on the 25th. The tomb is a stone sarcophagus, resting on a double stone terrace. This again stands upon a brick-terrace, which was laid out with glazed tiles, showing various patterns, all in blue and white. They have now become loose, and have been collected around the

Ballalbari, or Rajbari, only traces of the walls and ditches may be seen; there are no structural remains of any importance inside this enclosure. The Ballali bridge near Mirkadim has received some repairs from time to time and seems to be in fair order. At Rikabi Bazar, there is an old mosque of the Bengal style, of no special importance.

The Rajabari Math, 11 miles south of Munshiganj, is the most interesting ancient monument in this subdivision. It was erected by Chand Roy and Kedar Roy over the funeral pyre of their mother, and had been repaired in 1896 at the cost of Raja Srinath Roy, of Bhagyakul. It is a high tower, like a Hindu temple, built of bricks with ornamental designs in its outer surface. Among those the absence of any human or animal figures is remarkable in a Hindu monument of this kind. The statement that it was erected over the funeral pyre of the mother of Chand Roy and Kedar Roy, is based upon the modern inscription, which was put up over its door, when it was repaired in 1896. Another tradition says that it was a temple, enshrining a Mahadeo. Chand Roy and Kedar Roy were contemporaries of Akbar, and belonged to the Barah Bhuiyas, those independent chiefs who ruled over Eastern Bengal before it became annexed to the Moghul Empire.

L.—DISTRICT MYMENSINGH.

51. *The Atia ruins.*—As I have already in my letter No. 37, dated the 29th April 1902, submitted a detailed account of the ruins at Atia in the Tangail subdivision of the district of Mymensingh, I need here only repeat the principal facts. The big mosque at Atia was built by Said Khan, the son of Bayazid Khan, an Afghan of the Pani clan, in the time of Jahangir. The date of its inscription corresponds to 1609-10 A.D. When it had fallen into ruins, some person began to build another smaller mosque close to it. But as soon as Raushan Khatun Chaudhurani came to hear of this, she decided upon restoring the old mosque, and the second smaller mosque accordingly never was finished and has never been used. The inscription on the tomb of Shahinshah Baba Adam Kashmiri tells us that he died on the 14th October, 1507 A.D. He is called merely Baba Kashmir in this record, which, however, must be a mistake for Baba Kashmiri, as it is an impossible form. Close to it stands an old mosque of the Bengali style, which, according to the local tradition, was built by Ghiyasuddin Azam Shah. A ruined brick tomb in front of this mosque is pointed out as the burial place of this Sultan, a tradition, which, as I have already remarked in paragraph (49) of this report, deserves no credit whatever.

The buildings at Atia are from time time repaired at the cost of the Dilduar and Karotiya zamindars, the owners of the land, but they might be called upon to do some further repairs to the big mosque, portions of which are at present in a bad state.

PART III.—NOTES ON ANCIENT REMAINS INSPCTED BY BABU P. C MUKERJEE.

52. *General remarks.*—Up to November 1901 the Babu travelled in the Patna Division. He then went to Bhagalpur, and hereafter visited various places in the Burdwan Division and in the district of Balasore. On the 13th March 1902 he joined the office of the Director-General of Archæology in India. As his tours brought him to many places which have later on been visited by myself and which have been described in Part II of this report, I shall here merely give some notes on such places as I have not yet seen myself. They are extracted from a final report which the Babu submitted to me on the work done by him during the last year. The discovery by him of a new inscription at Gaya has already been referred to previously.

53. *Bawangarh, Tilkesvar, and Kalhua Hill.*—Bawangarh is a place in the north of the district of Champaran. Extensive lines of earthen walls are seen here running parallel to each other and covering the sites of several villages. The citadel itself at Rajpur Soreri is of a rectangular form. Remains of houses and wells, both of brick and stone construction, are found here. At Tilkesvar, in the district of Darbhanga, the Babu found three Sanskrit inscriptions, the characters of which resemble the modern Bengali script. The remains on the Kalhua hill, in the district of Hazaribagh, are almost exclusively

Jain sculptures; but there exists a temple with an image of Mahismardini, which is now worshipped under the name of Kulesvari. The Babu found no Buddhist remains there.

54. *District Bhagalpur.*—At Barari the entrance of one cave is blocked by the gate falling, while that of the other is almost choked up for the same reason. At Kahalgaon and Patharghata the rock sculptures, temples, and caves should be cleared of rank growth, trees, and rubbish and regularly be looked after. At Sultanganj the materials of the monastery were excavated and removed, while the coating of the stupa is peeling of. The rock sculptures on the Jahngira island require to be looked after.

55. *Barakar, Katrasgarh, Bankura, Vishnupur, and Garbheta.*—These places are all in the Burdwan Division. The four stone temples at Barakar are not in a bad condition, but the trees should be uprooted. One of them has an inscription in an ancient form of Bengali. At Khatrasgarh is a mediæval temple, but it is reported to be of no interest. The stone temple of Ektesvar, near Bankura, is in a dilapidated condition. The temples at Vishnupur are said to range from 900 to about 1750 A.D. Nearly all the temples possess inscriptions with dates and the names of their builders. The brick temples exhibit elaborate ornamentations and reliefs, chiefly scenes from the life of Krishna. The only temple of note at Garbheta is that known as Sarva-Mangala. It is built of laterite in the Orissan style, and is in good condition.

56. *District Balasore.*—The principal remains at Balasore are the old Dutch and English tombs, which are in good order. The Qadam Rasul and Juma Mosque, built by Taki Khan during the reign of Aurangzeb, are maintained by the local Muhammadans. There are some ancient Buddhist statues lying in the Municipal compound. Hindu temples, generally built of laterite, in the Orissan style, are reported from several places. The most interesting part of the temple at Karnagarh is the three-storied western gate called Jogi Gopha. The temple at Danton is known by the name of Shyamalesvara. The Sahasralinga temple at Shastini is reported to be in a very dilapidated state, while the temples at Kupari are said to be beyond the possibility of conservation. Ruined forts with laterite walls are reported from the following places:—

Gope, Rai-Baniagarh (ascribed to an ancestor of the Raja of Mourbhanj), Chandrasekhargarh, and Dolgram.

57. *Satgaon and Bansbaria.*—These places lie in the district of Hooghly.

The three domes of the mosque at Satgaon have fallen in, and the whole is covered with jungle. The Hansesvari Temple at Bansbaria is of the mixed Benares style, and covered with thirteen cupolas. There is a second temple with brick ornamentation, of the style of the Vishnupur temples.

T. BLOCH,

Archæological Surveyor, Bengal Circle.

REPORT ON THE ADMINISTRATION OF THE SALT DEPARTMENT DURING THE YEAR 1901-1902.

The 6th September 1902.—The following extracts from the Report of the Board of Revenue on the administration of the Salt Department in the Lower Provinces during the year 1901-1902, are published for general information.

E. W. COLLIN,
Offg. Secy. to the Govt. of Bengal.

No. 951B., dated Calcutta, the 8th August 1902.

From—H. WHEELER, ESQ., Secretary to the Board of Revenue, L. P.,
To—The Secretary to the Government of Bengal, Financial Dept.

I AM directed by the Board of Revenue to submit the following Report on the administration of the Salt Department during the year 1901-1902.

THE HON'BLE MR BOURDILLON, C.S.I.

* * * * *

CHAPTER I.—PRELIMINARY.

Salt Law.

3. The Indian Salt Act, XII of 1882, continued to be the salt law in force in Orissa. Outside that area in the districts of the 24-Parganas, Khulna, Midnapore, Howrah, Backergunge, Noakhali, and Chittagong that Act, and Act VII (B.C.) of 1864, remained concurrently in force.

Administration.

4. In January 1902, the district of Howrah, which, with Noakhali, had been brought within the scope of preventive operations in March 1901, was added to the charge of the Assistant Commissioner of Salt. No active measures have as yet been taken in Noakhali, but inquiries will shortly be made with a view to operations being started.

In accordance with the Government of India's order No. 3525S.R., dated the 14th July 1900, the saltpetre refineries in Calcutta and its environs were brought under the control of the Commissioner of Excise and Salt, Bengal, with effect from the 1st July 1901, the Assistant Commissioner (Mr. S. G. L. Platts) taking charge of them from the Assistant Commissioner of the Lower Division, Northern India Salt Department, on that date.

In Khulna, preventive operations, which in the previous year had been confined to the Kaliganj thana, were extended to thanas Asasuni, Paikgacha and Baitaghata. In Chittagong, three Sub-Inspectors' ranges covering the salt areas of the district, with head-quarters at Sitakund, Cox's Bazar, and Teknaf, were formed with effect from October 1901, and the salt staff was reinforced by the addition of three Sub-Inspectors, four petty officers, and 26 peons from Orissa.

* * * * *

CHAPTER II.—STOCK, IMPORTS, MANUFACTURES, AND CLEARANCES.

Accounts of stocks and issues.

7. The stocks, imports, clearances, &c., for the years 1899-1900 to 1901-1902 are shown below:—

STOCKS, IMPORTS, &c.	1899-1900.	1900-1901.	1901-1902.
	MDS.	MDS.	MDS.
Total of all stocks at the commencement of the year.	32,62,652	31,54,855	13,09,668
Total quantity imported or manufactured during the year.	1,07,81,024	89,33,305	1,33,89,363(a)
Total ...	1,40,43,676	1,20,88,160	1,46,99,031
Quantity on which duty was paid during the year.	1,07,72,858	1,06,20,120	1,09,58,475(b)
Quantity which passed free of duty for manufacture of glazed stoneware.	1,760	4,168	1,439(c)
Quantity written off during the year for wastage or otherwise.	1,14,203	1,54,204	1,20,153
Total ...	1,08,88,821	1,07,78,492	1,10,80,067
Balance at the close of the year ..	31,54,855	13,09,668	36,18,964

(a) Includes 374 maunds found in excess in *golas* and 108 maunds surplus from bond.
(b) Includes 6,40,325 maunds of Bombay and Madras salt passed free of duty.
(c) Includes 439 maunds used for ship's stores

At the commencement of the year stocks had fallen abnormally low; the quantity of salt in all the *golas*, both public and private, amounted to a little over 13 lakhs of maunds only, or nearly 18½ lakhs of maunds less than in the preceding year. The importations during the year were, however, unusually large, and totalled nearly one crore and 34 lakhs of maunds. Since the year 1898-99 there has been no local manufacture of salt. The sales amounted to over one crore and 9½ lakhs of maunds, and after allowing for wastage, the closing balance stood at 36,18,964 maunds. In addition, at the close of the year, there were 2,06,049 maunds of salt lying afloat in ships in the port of Calcutta ready to be sold direct to purchasers, against 1,63,267 maunds at the close of 1900-1901. At Chittagong 57,169 maunds of salt were lying afloat for discharge into bond at the close of the year.

The Collector of Customs, Calcutta, reports that the importations for the year and the quantity bonded were the highest on record. The increase in the importations was due to freight being cheap and plentiful in comparison with the previous year. Steamers have almost entirely superseded sailing ships in the general trade of Calcutta and in the salt trade in particular, and as it is always necessary for a steamer to obtain a quick despatch, a very large proportion of the salt imported was delivered into bond. In consequence, the accommodation at both the Sulkea and Kidderpore *golas* was rapidly filled up, and much difficulty was experienced in providing the bonding space required by the trade. The Board are satisfied that increased space for storage is needed at Sulkea, and proposals to that effect have been submitted.

Imports.

8. * * * * * * The importations into Calcutta advanced during the year by 49·5 per cent. The major portion still comes from the United Kingdom, though its former more extensive monopoly is being encroached upon by other competitors. The imports from Aden and the Red Sea are increasing rapidly, and as these salts do not have to pay the Canal dues, they compete on favourable terms with salt imported from Europe. Salt was imported for the first time from Port Said, of similar quality to the *karkatch* salts from Aden and the Red Sea, but as the steamers importing it have to pay the Canal dues, the Collector of Customs doubts whether it will be able to compete with the other *karkatch* salts.

Taken in conjunction with the large increase during the year in the operations at the Sulkea and Kidderpore golas, which is noticed below, it is obvious that the larger importations involved a considerable addition to the work of the Preventive Salt establishments in Calcutta. The Collector of Customs reports that salt was discharged from shipboard into bond on no less than 269 nights during the year, and this alone entailed much extra labour. As much as 700,000 tons of salt were weighed under official supervision—475,000 tons on boardship, and 225,000 tons at the golas. The low rate of wastage and the results of check re-weighments testified generally to the accuracy of the work done.

The importations into Chittagong show an advance of 70 per cent. compared with those in the preceding year. No reason has been assigned for this increase, but it is believed that, as in Calcutta, it was largely due to freight being easily and cheaply procurable.

Sales of imported salt from ship board and bond.

9. * * * * * * * The total quantity of imported salt sold increased by 1·4 per cent. Of this 32 per cent. was sold from shipboard and 68 per cent. from bond. The corresponding proportions in the preceding year were 27 and 73 per cent. In Calcutta although sales from the importing vessel direct increased by 18 9 per cent., there was a decrease of 10 per cent. in the sales from bond. The increase in the total sales at Narayanganj and Jhalakati is noticeable, amounting to as much as 18 and 71 per cent., respectively.

Transactions in the Sulkea and Kidderpore Dock *golas*.

10. The following figures show the total turn-over at the Sulkea and Kidderpore Dock *golas* for the past five years:—

	Mds.
1897-98	1,03,91,078
1898-99	1,08,34,957
1899-1900	1,13,87,469
1900-1901	1 21,04,343
1901-1902	1,49,52,131

The figures for the past year were the highest ever recorded. The total turn-over at the Sulkea *golas* was 99,70,762 maunds against 81,09,104 maunds in the preceding year. At the Dock *golas* it was 49,81,369 maunds against 39,95,239 maunds. The increase in the work which these figures connote has already been referred to

Inland bonded warehouses.

11. Licenses were issued for three additional private warehouses during the year. * * * * * Twenty-one warehouses in all were open at the close of the year.

* * * * * *

The quantity of salt despatched to these inland bonded warehouses from shipboard and from bond in Calcutta amounted to 13,53,091 maunds, as compared with 10,43,871 maunds in 1900-1901, an increase of over 29 per cent. The preced ng year had shown an increase of 25 per cent. as compared with 1899-1900, and it would seem that this branch of the salt trade is steadily and rapidly growing in popularity. The quantity of non-duty-paid salt removed during the year from shipboard at Chittagong for clearance at Narayanganj shows an increase of 3,505 maunds, or over 25 per cent., as compared with the preceding year, but this was far from compensating for the very large falling off during 1900-1901.

* * * * * *

Inland transport of salt.

13. The following statement shows the proportion of duty-paid salt conveyed by the various means of transport from Calcutta inland, as well as to Orissa, during the past two years:—

Period.	By boats.	By steamers and flats.	By rail.	Total despatch.
	Mds.	Mds.	Mds	Mds.
1900-1901 ...	26,17,561	12,08,554	55,23,274	93,49,389
1901-1902 ..	24,87,009	10,66,190	64,41,580	99,94,779
	−1,30,552	−1,42,364	+9,18,306	+6,45,390

The quantity carried by boat decreased by 4·9 per cent., and that sent by steamers by 11·7 per cent. The quantity conveyed by rail, however, increased by 16·62 per cent. Of the aggregate quantity despatched from Calcutta, 24·8 per cent. was conveyed by boats, 10·6 per cent. by steamers and flats, and 64·4 per cent. by rail, as against 27·9, 12·9, and 59·07, respectively, during the preceding year. It would appear that the railways are steadily attracting the traffic to the deteriment of other means of transport. The opening of a pass station at Shalimar in February 1902, since when it is possible to convey salt to Orissa by the Bengal-Nagpur Railway, will increase this tendency.

Stocks and issues of locally-made salt

14. There was no manufacture of salt during the year on the Chilka Lake in Orissa. The total quantity of salt in hand at the Tua and Gurubai factories at the beginning of the year was 3,16,944 maunds, inclusive of a wastage of 3,530 maunds remaining to be written off at the close of the previous year. To this have to be added 54 maunds of salt found in excess in a heap at the Gurubai factory, making the total stock 3,16,998 maunds. Of this quantity, 2,25,116 maunds were sold (1,31,654 maunds for consumption in Puri, 91,968 maunds in Cuttack, and 1,494 maunds outside the Province), against 84,687 maunds in the previous year; 21,320 maunds were written off as wastage, leaving a balance of 70,562 maunds at the close of the year. Deducting from this balance a further wastage of 13,017 maunds, which remained to be written off, the actual balance stood at 57,545 maunds. This was finally disposed of by the 23rd May 1902. The largely increased sales were due to the reduction of the wholesale price to half-an-anna a maund, which was done with the object of effecting an early clearance of the stocks in hand. It will be seen that this result was achieved within a far shorter period that was anticipated in the report of the preceding year.

Imports of Madras salt into Orissa.

15. The imports of Madras *karkatch* and refined salt into Orissa from the different factories, as shown on the margin, amounted to 6,90,989 maunds, against 6,92,918 maunds in the preceding year, showing a decrease of 1,929 maunds, or ·2 per cent. The factories at Surla and Karasa showed an aggregate increase of 1,60,270 maunds, while those at Ganjam, Naupada, Jagannnaikpur, Coconada, and other places exhibited a total decline of 1,62,199 maunds, resulting in a net decrease of 1,929 maunds.

Name of factory from which the salt was imported.	Quantity imported in—		Increase.	Decrease.
	1900-1901.	1901-1902.		
	I. Mds.	I. Mds.	I. Mds.	I. Mds.
Ganjam	3,10,960	2,04,777	.	1,06,183
Naupada	1,69,496	1,57,466	.	12,030
Surla	13,128	1,53,140	1,39,012	..
Karasa	9,394	30,642	21,258	...
Jagannaikpur	21,572	6,478	.....	15,094
Other factories in Coconada and other places.	1,08,378	1,39,486	. ...	28,892
Total ...	6,92,918	6,90,989	1,60,270	1,62,199
Net decrease ... 1,929 mds.				

The result is, perhaps, due to circumstances of temporary application only. The imports into the districts of Cuttack and Balasore showed an aggregated advance of 1,03,815 maunds, and it was the decrease of 1,05,744 maunds imported into Puri and the Tributary Mahals, which more than counterbalanced what would otherwise have been a large increase. In Cuttack it is said that foreign-imported salt has been driven from the market, and the results in Puri are mainly due to the abnormally low price at which the old stocks of Lake salt were offered to the public. The decrease in the Tributary Mahals is not easily accounted for. The Commissioner of Salt suggests that a portion of the increased supplies to the district of Cuttack found their way into the Tributary Mahals, there had also been a large increase in the importations into the latter area during the preceding year, and it is possible that there were old stocks in hand.

CHAPTER III.—CONSUMPTION AND PRICES.

Consumption in Bengal.

16. The total quantity of salt which passed into consumption in the entire Province of Bengal during the year under review was 1,04,31,438 maunds. This is exclusive of 5,45,011 maunds, being the net exports by land, and inclusive of 17,974 maunds educed from saltpetre. The figures show an increase of 2,03,937 maunds, or 1·9 per cent. Of the total quantity the saliferous tracts (including the whole of Orissa) took 19,54,457 maunds, or about 19 per cent., and the rest of the Province 84,76,981 maunds, or 81 per cent. The consumption per head in the saliferous tracts works out to a little over 6 seers, or 12·34lbs approximately, and in the rest of the Province to 5 seers and 3 chittaks, or 10 67lbs. The figures are, at best, approximate only; in the first place, they assume that the unconsumed stocks of the previous year, which were consumed during that under report, were equal to the balance in hand at the end of the year under review. Again it is assumed that the salt is consumed in the district to which it is registered as despatched. In the saliferous districts in which illicit manufacture is easy, it would certainly have appeared probable that the recorded consumption of licit salt per head of the population would have been less than elsewhere. The figures, however, convey the opposite impression, but it is to be borne in mind that the arrangements for the record of consumption within the salt law limits are more complete than in the districts outside them.

The rates of consumption per head of population in the Bombay and Madras Presidencies for 1901-1902 have not yet been ascertained, but during the preceding year they were 11·88lbs. and 15·84lbs., respectively.

Consumption of salt within the Salt law limits.

17. * * * * * During the year 1900-1901 the reported consumption of salt within salt law limits rose from 8,42,529 to 8,51,271 maunds, and in the year under report it has still further increased by 15,902 maunds. There was an advance in consumption in all the saliferous districts, with the exception of Howrah and Noakhali, but it was largest in the districts of the 24 Parganas and Chittagong. Judging by the population test, however, the districts of Howrah and Backerganj show the best results and the district of Noakh ali the worst.

* * * * * *

21. * * * * * In most of the districts, as in the previous year, prices advanced during the year under report. The rise in price recorded at in Darjeeling is very marked, and special enquiry will be made as to the reason. Prices ruled lowest at Puri. The average wholesale price for the whole Province was Rs. 3-12-9 per maund, as compared with Rs. 3-11-7 in 1900-1901, showing a rise of one anna and two pies. Except in Pabna and Cuttack, the average price of salt per maund, in the principal provincial bazars, was generally higher than in the preceding year. The average for the twelve marts for which figures are quoted, was Rs. 3-11-9 per maund against Rs. 3-10-4 in 1900-1901, showing an increase of one anna and five pies per maund.

Prices of salt in Bengal generally.

The average wholesale price of Liverpool salt per hundred maunds as sold from the ship's side in the port of Calcutta, exclusive of duty, amounted to Rs. 69-11-5, as compared with Rs. 70-3-1 in 1900-1901, showing a decrease of only seven annas and eight pies. Considering the rise last year from Rs. 62-4-11, the fall is insignificant, and in view of the large importations it might have been expected that prices would have declined still further. It is also noticeable that the extension of the inland bonded warehouse system does not so far appear to have had much effect in cheapening salt in the interior of the province. The selling price of Liverpool salt per hundred maunds, exclusive of duty, which in 1900-1901 varied from Rs. 77-12-4 to Rs. 60-1-10 ranged in the year under report from Rs. 70-5-8 to Rs. 57-4 6.

CHAPTER IV.—PREVENTIVE MEASURE.

22. Preventive operations outside Orissa were carried on as before, in the districts of the 24-Parganas, Midnapore, Khulna, Backergunge, and Chittagong. In Midnapore, as already stated, the retention of the temporary staff has been extended for an additional period of three years. The district of Howrah was brought tentatively within the scope of operations, and a small party from the Tamluk circle, in the district of Midnapore, was sent in January 1902, to work in the Syampur and Ulubaria thanas of the Howrah district. The experience of the past two seasons having shown that illicit manufacture does not prevail to any appreciable extent in the district of Backergunge, preventive operations there have been discontinued since the close of the year. The preventive staff has been disbanded, with the exception of the Inspector whom it is proposed to depute to Noakhali to ascertain and report on the steps to be taken and the establishment required, in order to commence preventive operations in that district during the next working season.

Preventive operations in the saliferous districts outside Orissa.

23. The number of cases in which salt was attached, released, and confiscated during the year under review were 929, 1½, and 908, respectively, as against 1,074, 2, and 968 in the previous year, the corresponding quantities of salt being 684, 546 and 150 maunds against 640 45, and 548 maunds in the year 1900-1901. There was thus an increase of 44 maunds, or 6·8 per cent., in the quantity attached, and a decrease of 398 maunds, or 72·6 per cent., in the quantity confiscated. On an average about 29½ seers of salt were attached and 6½ seers confiscated in each case, as against 24 seers, and 22⅔ seers, respectively, in 1900-1901.

Attachments, releases, and confiscations in the saliferous districts, including Orissa.

24. The number of seizures and unsuccessful house-searches during the year under review were 1,491 and 42, respectively, as against 794 and 17 in the previous year. There were no unsuccessful house-searches in the districts of Puri and Khulna, while in the districts of the 24-Parganas, Midnapore, and Chittagong the number of failures was insignificant in comparison with the number of seizures effected. In the districts of Balasore and Cuttack the numbers were 20 and 14, respectively; the owners of the houses are said to have learned of the intended search and to have destroyed all illicit articles. The general percentage of unsuccessful house-searches to seizures exhibits a slight increase, having risen from 2·14 in the previous year to 2·81 in the year under report. In the year 1899-1900, however, it was as much as 4·1.

Number of seizures and unsuccessful searches.

25. * * * * * There were 1,238 prosecutions during the year under review, against 898 in the previous year: out of 1,405 persons arrested and brought to trial, 1,174 were convicted, showing a percentage of 83.

Number of cases instituted under Acts VII (B.C.) of 1864 and XII of 1892.

24-Parganas	361
Chittagong ...	179
Balasore	141
Puri	106

Cases of illicit manufacture of salt (section 9, Act XII of 1882) numbered 953, and were most numerous in the districts marginally noted. The proportion of persons convicted of this offence was 80 per cent. of those brought to trial. In the districts of Chittagong and the 24-Parganas the increase is attributed to greater activity on the part of the salt officers, to the provision of a steam launch in the 24-Parganas, and to the strengthening of the salt force in Chittagong, which was for the first time employed throughout the year. There were no cases of possession of spontaneous or swamp salt during the year. Owing to the failure of the police to attend house searches, about 50 cases in the 24-Parganas and 42 cases in Midnapore are reported to have broken down. To prevent a repetition of these fiascos, the sanction of Government has been obtained to the appointment of nine special police head constables in Midnapore. Similar arrangements in the 24-Parganas are under the consideration of the Salt Commissioner. Salt officers were instrumental in the detection of 39 opium cases also, as compared with 37 in the preceding year. No cases under the Excise Act were reported by them.

* * * * * * *

CHAPTER V.—FINANCIAL RESULTS.

28. * * * * * The financial results of the year, as compared with 1900-1901, show an increase of Rs. 5,83,954, or 2·3 per cent. in the receipts and an increase of Rs. 42,099, or 9·02 per cent. in the charges, giving a net revenue of Rs. 2,55,21,299, which is in excess of that obtained during 1900-1901 by Rs. 5,41,855, or 2·2 per cent. The increase in receipts occurs mainly under the two heads of Import and Excise Duties on Salt.

Receipts and charges.

* * * * * * *

CHAPTER VI.—MISCELLANEOUS.

35. The quantity of salt educed in the manufacture of saltpetre and removed from all refineries in the Province on payment of duty during the year, was 17,974 maunds, as compared with 17,584 maunds similarly removed in 1900-1901. The quantity of refined saltpetre produced in the refineries in Calcutta was 50,571 maunds, as compared with 61,924 maunds, and the quantity of salt educed was 5,594 maunds, against 3,496 maunds in 1900-1901. The quantity of salt excised was 2,360 maunds in comparison with 4,740 maunds in the preceding year.

Trade in saltpetre.

* * * * * * *

38. In Midnapore there were six cases of assault on Salt officers, one in each of the thanas Khedgree, Contai, Dantan, and Egra, and two in thana Mohisadal. In the case at Nasalla Chak hât, in thana Khedgree, five men were charged under section 147 of the Indian Penal Code, all of whom were convicted, one being fined Rs. 100 and the rest Rs. 60 each. In the case in thana Contai, three men were charged under sections 114 and 353 of the Indian Penal Code, but all were acquitted for want of sufficient evidence. In the case in thana Dantan nine men were sent up under sections 353 and 147 of the Indian Penal Code, all of them being found guilty and sentenced to different terms of imprisonment, while in the two cases in thanas Egra and Mohisadal all the accused, except one, were fined. Another case in the Mohisadal thana is pending trial. * * * * * The Commissioner of Salt reports that in all the districts the attitude of the people towards the Department is hostile, but cases of active resistance are becoming scarce in the districts of the 24 Parganas and Chittagong.

Offences against officers of the Department

* * * * * * *

WEATHER AND CROP REPORT.

For the week ending the 15th September 1902.

Burdwan.—Rainfall at Sadar 1·88, Kalna 3·52, Katwa 2·06, Raniganj 2·80. Weather fine and hot. Transplantation of *aman* nearly finished. Weeding commenced. Harvesting of *aus* continues. Fodder and water sufficient. Condition of cattle good. Common rice sells at 11 seers per rupee.

Birbhum.—Rainfall at Sadar 7·67, Rampur Hât 7·95. Weather cloudy. Rampur Hât subdivisional officer reports that considerable loss to property and some lives have been caused by recent floods. Several villages destroyed. Common rice sells at 12 seers per rupee. Fodder sufficient.

Bankura.—Rainfall at Sadar 3·85. Paddy and sugarcane crops doing well. Fodder and water sufficient. Common rice sells at 12 seers per rupee.

Midnapore.—Rainfall at Sadar 1·33, Contai 1·73, Ghatal 5·24, Tamluk 5·23. Weather hot and cloudy. Harvesting of *aus* continues. Agricultural prospects good. Fodder and water sufficient. Cattle-disease reported from Binpur thana. Common rice sells as follows:—

	Srs.	ch.	
Sadar	12	8	per rupee.
Contai	12	0	
Tamluk	11	0	
Ghatal	12	12	

Hooghly.—Rainfall at Sadar 3·48, Serampore 4·79, Arambagh 3·05. Weeding of *aman*, harvesting of *aus* and steeping of jute going on. Prospect of standing crops good. Weather seasonable. Fodder and water sufficient. Common rice sells as follows:—

	Srs.	ch.	
Sadar	10	0	per rupee.
Serampore	10	4	
Arambagh	11	6	

Howrah.—Rainfall at Sadar 2·92, Ulubaria 1·64. Fall general. No more rain wanted for next 8 or 10 days. Transplantation of *aman* paddy still going on. Reaping of *aus* still continues; its threshing and the cutting and steeping of jute going on. Sugarcane and vegetables are doing very well. Fodder and water-supply sufficient. No cattle-disease. Common rice sells on an average at 11 seers per rupee everywhere within the district.

24-Parganas.—Rainfall at Sadar 2·65, Barasat 1·22, Basirhat 3·01, Diamond Harbour 1·26. Weather hot and cloudy with moderate showers. State and prospect of crops good. *Aus* and jute still being harvested, and the latter being steeped. Transplantation of *aman* nearly finished. Common rice sells at 11 seers per rupee. Condition of cattle good. Supply of fodder and water sufficient.

Nadia.—Rainfall at Sadar 3·84, Ranaghat 4·02, Chuadanga 5·44, Meherpur 3·50, Kushtia 3·16. Harvesting of jute continues. Prospects of standing crops good. No cattle-disease reported. Fodder and water sufficient. Common rice sells as follows:—

	Srs.	ch.	
Sadar	12	0	per rupee.
Ranaghat	11	0	
Chuadanga	11	0	
Meherpur	13	5	
Kushtia	11	4	

Murshidabad.—Rainfall at Sadar 9·13, Kandi 5·40, Jangipur 6·23, Lalbagh 7·25. Weather seasonable. Harvesting of *bhadoi* almost completed. There was a severe flood of the Kana Nadi and Moro river in Kandi subdivision. Jute being cut and steeped in Jangipur. Sugarcane doing well. No cattle-disease. Fodder and water sufficient. Common rice sells as follows:—

	Srs.	ch.	
Sadar	11	8	per rupee.
Kandi	13	0	
Jangipur	12	0	
Lalbagh	11	0	

Jessore.—Rainfall at Sadar 3·72, Jhenida 8·54, Magura 10·07, Narail 6·46, Bangaon 2·74. Weather seasonable. Prospect of crops fair. Harvesting of *aus* almost completed. Rain has improved prospect of *aman* paddy. Fodder and water sufficient. Cattle-disease reported from Sahkuna outpost in Magura and Kalia in Narail. Common rice sells at 12 seers per rupee.

Khulna.—Rainfall at Sadar 3·41, Bagerhat 1·57, Satkhira 6·60. Weather seasonable. Transplantation of *aman* still continues. *Boro* maturing well and an average crop expected. Fodder and water sufficient. Cattle-disease reported from Paikgachha and Fakirhat. Common rice sells as follows:—

	Srs. ch.	
Sadar	11 12	per rupee
Bagerhat	11 10	
Satkhira	10 8	

Rajshahi.—Rainfall at Sadar 5·96, Nator 3·51, Naugaon 4·93. Prospects of standing crop good. Harvesting of jute and *aus* continues. Transplantation of *aman* nearly finished. Common rice selling at 12 seers per rupee.

Dinajpur.—Rainfall at Sadar 3·80. Fall in the district general, varying from 2·98 to 8·21. Weather seasonable. Standing crops good. Steeping of jute continues. Cattle-disease to small extent reported from Kaliaganj. Fodder and water plentiful. Rice selling at 12 seers per rupee.

Jalpaiguri.—Rainfall at Sadar 20·63, Alipore Duars 11·33. Weather rainy with high wind during the first four days. Harvesting of *bhadoi* paddy nearly finished. Steeping of jute going on. *Haimanti* paddy doing well. Prospect favourable. Common rice sells at 11¼ seers a rupee. Fodder and water sufficient.

Darjeeling.—Rainfall at Sadar 11·64, Kurseong 17·75, Siliguri 13·28. Weather seasonable. *Hills—Bhadoi, haimanti dhan*, maize, *bara* and *chhota marua* doing well. *Terai*—Transplanting of *haimanti* paddy nearly finished. Reaping of jute and *bhadoi* paddy going on. Prospects good. Coarse rice sells as follows:—

	Srs. ch.	
Hills	9 0	per rupee.
Terai	10 0	

Maize sells at Darjeeling at 20 seers and at Kalimpong at 34 seers per rupee.

Rangpur.—Rainfall at Sadar 7·33, Gaibanda 2·29, Nilphamari 5·84, Kurigram 7·26. Weather cloudy and hot. Transplantation of *aman*, cutting and steeping of jute going on. Harvesting of *bhadoi* nearly finished. Fodder and water sufficient. Common rice sells as follows:—

	Srs. ch.	
Sadar	9 8	per rupee.
Gaibanda	10 0	
Kurigram	12 0	
Nilphamari	10 8	

Bogra.—Rainfall at Sadar 4·63. Fall general. Harvesting of *aus* and transplantation of *aman* nearly finished. Steeping of jute going on. Outturn of jute estimated to be 70 per cent. Fodder and water sufficient. Prospects fair. Common rice sells at 12 seers per rupee.

Pabna.—Rainfall at Sadar 3·12, Sirajganj 5·05. Weather cloudy and rainy. Heavy showers general. Prospects of *aman* and sugarcane fair. Fodder sufficient. No cattle-disease Common rice sells at 10 seers per rupee.

Dacca.—Rainfall at Sadar 5·2, Manikganj 11·41, Munshiganj 7·17, Narayanganj 5·39. Prospects of crops fair. Weather seasonable. Fodder available. No cattle-disease. Common rice sells at 11 seers per rupee.

Mymensingh.—Rainfall at Sadar 4·06, Jamalpur 2·92, Kishorganj 2·71, Tangail 4·18. Weather seasonable. Steeping of jute and transplantation of *aman* continue. Reaping of *aus* finished, its outturn estimated at 80 per cent. Fodder and water sufficient. No cattle-disease. Common rice sells as follows:—

	Srs ch.	
Sadar	12 0	per rupee.
Kishorganj	11 4	
Jamalpur	11 6	
Tangail	10 4	

Faridpur.—Rainfall at Sadar 2·95, Goalundo 3·50, Madaripur 5·62. Weather sultry with occasional rain. Prospects of *aman* paddy good. Fodder available in sufficiency. Condition of cattle good. Water sufficient. Common rice sells at 11 seers the rupee.

Backergunge.—Rainfall at Sadar 4·09. Fall general. Weather seasonable. Transplantation of *aman* continues. Prospects fair. Cattle-disease in thana Matbari. Fodder sufficient. Common rice sells at 13½ seers (*aus*) and 12 seers (*aman*) at Sadar; at Bhola 11 seers (*aus*) and 9½ seers (*aman*) per rupee.

Tippera.—Rainfall at Sadar 1·64, Brahmanbaria ·41, Chandpur 11·53. Weather seasonable. Prospects of standing crops good. Reaping of jute and transplantation of paddy not yet completed. Fodder and water sufficient. No cattle-disease. Common rice sells at 14 seers per rupee.

Noakhali.—Rainfall at Sadar 4·26, Feni 2·68 Harvesting of *aus* and transplantation of *aman* still continues Prospects fair. Cattle-disease at Sudharam. Water sufficient. Fodder not so. Common rice sells at Sadar at 11½ seers and at Feni at 13 seers per rupee

Chittagong.—Rainfall at Sadar 2·26, Cox's Bazar 11·80. Reaping of *aus dhan* is finished. Transplantation of *aman dhan* is still going on. Water and fodder sufficient. Common rice selling at 12 seers 11 chitaks.

Chittagong Hill Tracts —Rainfall 2·50. Weather fair. *Joom* harvesting and sowings of winter rice continue. Prospects of cotton and rape crop bad owing to too much rain and too little sunshine. Common rice sells at 12 seers per rupee.

Patna.—Rainfall at Sadar 10·20, Barh 3·75, Bihar 2·01, Dinapore 4·08, Hilsa 4 27, Bikram 4 52. Weather cloudy. Rainfall proved very useful, but more wanted. Harvesting of Indian-corn progre sing. *Aghani* prospects improved. Transplantation of paddy continues. No cattle-disease. Fodder and water sufficient. Common rice sells as follows :—

	Srs.	ch.	
Patna	12	0	per rupee.
Bihar	10	0	
Dinapore	12	4	
Barh	11	12	

Gaya.—Rainfall at Sadar 5·34, Jahanabad 4·95, Aurangabad 8·41, Nawadah 2·25. Weather seasonable. Transplantation of paddy over, except in the Nawadah subdivision. Harvesting of the *bhadoi* crops commenced. Sugarcane doing well. No cattle-disease. Fodder and water ample. Average price of common rice is 10¾ seers per rupee.

Shahabad.—Rainfall at Sadar 1·23, Buxar 2·50, Bhabhua 3·48, Sasaram 2 41, Dehri 2·93. Weather hot and cloudy. Harvesting of *bhadoi* continues. Prospects of paddy and sugarcane good. No cattle-disease. Rice sells at Sadar at 11 seers a rupee.

Saran.—Rainfall at Sadar 5 59, Siwan 4·0), Gopalganj 6·75. Weather rainy and cloudy. Rainfall has been general and has proved most beneficial to agricultural operations. Standing crops doing well. Fodder and water sufficient. Cattle-disease reported from one village. Common rice sells at 12¼ seers per rupee.

Champaran.—Rainfall at Sadar 4·73, Bettiah 5·09. Weather hot and cloudy. Harvesting and threshing of *bhadoi* crops going on. Outturn of maize estemated at 110 per cent. Transplantation of *aghani* rice finished. Sugarcane doing well. Little cattle-disease. Fodder and water sufficient. Common rice sells at 14¾ seers and maize at 22 seers per rupee.

Muzaffarpur.—Rainfall at Sadar 2 25, Hajipur 4·11, Sitamarhi 1·69. Weather cloudy generally. Transplantation of paddy nearly finished. Harvesting of *bhadoi* crops continues. Prospects fair. Fodder and water sufficient. Prices are —Common rice 11½ seers, maize 22 seers a rupee.

Darbhanga.—Rainfall at Sadar 1·67, Samastipur 9·18, Madhubani 3 89. Transplantation of paddy is still going on. Harvesting of *bhadoi* in progress. Fodder and water sufficient. Cattle-disease is reported from Warisnagar and Samastipur thanas. Common rice sells as follows : —

	Srs.	ch.	
Sadar	12	8	per rupee.
Samastipur	12	0	
Madhubani	11	11	

Monghyr.—Rainfall at Sadar 5·22, Begusarai 4 51, Jamui 4·25. Weather hot and cloudy. Reaping of *bhadoi* crops and *makai* harvesting continues. Paddy benefited by rain. Sugarcane doing well. Fodder and water sufficient. No cattle-disease. Common rice sells as follows :—

	Srs.	ch.	
Sadar	11	8	per rupee.
Begusarai	12	0	
Jamui	11	0	

Bhagalpur.—Rainfall at Sadar 1·94, Banka 2 06, Malhipura 4·83, Supaul 5·16. Weather cloudy. Prospects of *aghani* continue fair. Harvesting of *marua* and *bhadoi* paddy going on Transplantation of paddy completed. Sowing of *kurthi* commenced in Banka subdivision. Sporadic cases of cattle-disease. Fodder and water sufficient. Common rice sells as follows : —

	Srs.	ch.	
Sadar	11	6	per rupee.
Banka	12	10	
Madhipura	13	0	
Supaul	15	0	

Purnea.—Rainfall at Sadar 6·14, Kishanganj 4·15, Araria 5·25. Fall general. Weather variable *Bhadoi dhan* and jute are being harvested. Cattle-disease reported from Palasi outpost. Fodder and water sufficient. Common rice sells at Sadar and Kishanganj at 11 seers and at Araria at 14 seers per rupee.

Malda.—Rainfall at Sadar 3·52, Chanchal 6·70, Sibganj 4·88, Gajol 6·04. Fall general. Weather hot and cloudy. Plants of winter rice thriving. Prospects good. Harvesting of *bhadoi* not yet completed. Cutting of jute still continues. No cattle-disease. Fodder and water sufficient. Common rice sells at 12½ seers per rupee.

Southal Parganas. Rainfall at Sadar 9·51, Deoghur 2·90, Godda 4·15, Jamtara 5·98, Pakaur 8·03, Rajmahal 4·84 Weather rainy but hot. Prospects of *aghani* good. Standing crops doing well. Transplantation of rice over. Harvesting of *makai* continues. Common rice sells at 12 seers per rupee at Sadar.

Cuttack.—Rainfall at Sadar 0·32. Fall general. Weather seasonable. Early *beali* being cut and average outturn expected. Late *beali* growing well into maturity. *Guru* and *laghu sarad* growing well. Prospects fair. No cattle-disease. Fodder and water sufficient. Old common rice sells at 14 seers 7 chitaks and new *beali* at 18 seers 6 chitaks at Sadar.

Balasore.—Rainfall at Sadar 0·87. Fall general *Beali* being reaped. *Sarad* being transplanted and weeded. Prospects good. Standing crops with sugarcane prospering. Rice sells at 14 and 16 seers a rupee at Sadar and Bhadrak respectively. Fodder and drinking water sufficient.

Angul.—Rainfall at Sadar nil, Chhendipada 1·07, Tikerpara 0·47, Bissipara 0·24 Weather hot. Weeding of paddy and sowing of *rabi* in progress. Harvesting of *bhadoi* crops continues. Common rice sells at 12 and 10½ seers per rupee at Sadar and Khondmals respectively.

Puri.—Rainfall 0·56. Fall general. Weather seasonable. Puddling and weeding of winter rice continues. Harvesting of *bhadoi* paddy and *mundua* in progress. Outturn expected to be normal. Sugarcane and other miscellaneous crops doing well. Fodder and water-supply sufficient. Common rice sells at 14 seers 7 chitaks per rupee. Cattle-disease has broken out at places.

Hazaribagh.—Rainfall at Sadar 3·59, Giridih 4·55. Fall not general. Weather seasonable. Harvesting of *bhadoi* crops going on. Sugarcane doing well. Cattle-disease reported from two thanas. Fodder and water sufficient. Common rice sells at 10¾ seers per rupee.

Ranchi.—Rainfall at Sadar 5·86. Fall general. Weather seasonable. Prospects good. Sowing of *sirguja* and *kurthi* in progress. Cattle-disease reported from several thanas. Fodder and water sufficient. Common rice selling at 14 seers per rupee.

Palamau.—Rainfall at Sadar 2·50. Weather seasonable. *Sawan* and *gundli* being harvested. Standing crops all doing well. Cattle-disease continues in places. Fodder and water sufficient. Prices at Sadar—Rice 11¼ seers, Maize 16 seers 14 chitaks per rupee.

Manbhum.—Rainfall at Sadar 1·99, Gobindpur 2·87. Fall general. Weather seasonable. Prospects of crops on ground good. Transplantation of winter rice completed. Palasi lac about 75 per cent. *Doha tasar* about 50 per cent. of normal harvest. Fodder and water sufficient. Cattle-disease not reported. Average price of common rice at Sadar is 12 seers and at Gobindpur 10½ seers per rupee.

Singhbhum.—Rainfall 1·13. Prospect of crop good. Harvesting of *guru* paddy commenced. Average price of rice is 12¼ seers per rupee in the district; at Chaibassa 12 seers.

General Summary.—The rainfall during the week was general and heavy at places. More rain is still required in the Patna district. In Rampur Hat subdivision of the Birbhum district considerable loss of property and loss of some lives have been caused by floods. Sugarcane promising Harvesting of *bhadoi* crops still continues. Transplantation of winter rice is almost over Standing crops doing well Prospects fair. Cattle-disease reported from 15 districts. Fodder and water generally adequate. The price of common rice has risen in 3 districts, fallen in 12, and is stationary in the rest (32).

By order of the Lieutenant-Governor of Bengal,

W. C. MACPHERSON,

Offg. Secretary to the Govt. of Bengal.

REVENUE DEPARTMENT,

The 16th September 1902.

Meteorological Report of the Province of

STATION OBSERVATIONS.

Meteorological Division.	Division.	District.	Representative stations.	Air Pressure. Highest, 8 A.M., barometer reading.	Air Pressure. Lowest, 8 A.M., barometer reading.	Air Pressure. Mean, 8 A.M., reduced to 32°.	Air Pressure. Mean reduced to sea-level and constant gravity, Lat. 45°.	Air Pressure. Variation from normal mean.	Wind. Mean direction at 8 A.M.	Wind. Mean velocity in miles daily.	Temperature. Highest of month.	Temperature. Lowest of month.	Temperature. Mean daily maximum temperature.	Temperature. Mean daily minimum temperature.	Temperature. Mean daily temperature.	Temperature. Variation from normal mean.
South-West Bengal.	Burdwan	Burdwan	Burdwan	29·673	29·451	29·569	29·615	+·022	S8°E	73	95·9	75 8	90·6	79·1	84·9	+0·7
			Raniganj	29·416	29 200	29·326	29·607	—	S38°E	34	96·2	73·9	91·5	78·4	85·0	+1·8
		Birbhum	.....													
		Bankura	Bankura	29·438	29 203	29·341	29·589	—	S51°E	8	96·6	75·9	91·2	79·1	85·2	+2·0
		Midnapore	Midnapore	29·599	29 369	29 510	29·605	+·003	S14°E	62	95·3	75·7	90·7	79·2	85 0	+1·7
		Hooghly	.....													
		Howrah	.....													
	Presidency	24-Parganas	Sangor Island	29·720	29·443	29·635	29 605	+·014	S2°E	312	91·9	77 6	89·6	80 8	85·2	+1·7
		Calcutta	Calcutta	29·763	29·505	29·649	29 616	+·025	S17°E	57	94·2	74·6	89·8	78·9	84·4	+1·7
		Nadia	Krishnagar	29·720	29·530	29 632	29·627	—	S28°E	92	94·3	75·2	90·9	78 5	84·8	+1·2
		Murshidabad	Berhampore	29·693	29·518	29·604	29 619	+·018	S8°E	80	97·3	75 8	90·7	79·4	85 1	+1·4
		Jessore	Jessore	29·743	29·543	29 650	29 630	+·025	S48°E	39	94·5	75 2	90·2	79·6	85·0	+1 3
		Khulna	.....													
North Bengal.	Rajshahi	Rajshahi	Rampur Boalia	29·702	29·533	29·610	29·639	+·027	S4°E	75	92·1	75·1	89·1	80·1	84 6	+1 7
		Dinajpur	Dinajpur	29·682	29·435	29·598	29·615	+·006	S50°E	74	93·3	75·0	89·3	79·0	84·2	+0·5
		Jalpaiguri	Jalpaiguri	29·504	29 293	29·410	29·652	+·022	N80°E	43	93·4	72·1	88 2	77·4	82·8	+0·4
		Darjeeling	Darjeeling	23 029	22·833	23 945	—	—·008	S45°E	83	70·2	56·1	66 6	57·6	62·1	+0·8
		Cooch Behar	Cooch Behar	29·629	29·456	29·542	29·652	—	S61°E	53	93 9	74·1	88 1	78·4	83·3	—
		Rangpur	Rangpur	29·658	29·475	29·573	29·650	+·027	S37°E	73	93 7	75·8	88·6	78·4 (c)	83·9 (c)	+0·3
		Bogra	Bogra	29·698	29·544	29·611	29·624	+·020	S65°E	106	95·2	75·2	89 0	78·6	84·1	+0·8
		Pabna	Sirajganj	29·734	29 563	29·630	29·635	+·013	S25°E	45	91·3	75·2	87·5	79 1	83·3	+0·6
East Bengal.	Dacca	Dacca	Narayanganj	29·763	29·594	29·678	29·650	+·020	S17°E	160	93·1	75·7	88 2	79·8	84·1	+0·8
		Mymensingh	Mymensingh	29·723	29·551	29·638	29 643	+·011	S42°E	68	93 7	75·1	87·5	78 7	83·1	+0 6
		Faridpur	Faridpur	29·742	29 504	29·651 (a)	29 645 (a)	+·010	S30°E	97 (a)	91·8	75·4	88 4 (a)	78·9 (a)	83·7 (a)	+1·1
		Backergunge	Barisal	29 752	29 574	29·667	29 625	+·015	S22°E	91	91·8	75·1	88 3	78·4	83·4	+0·9
	Chittagong	Tippera	Comilla	29·756	29·595	29·675	29·659	—	S24°E	78 (b)	94·8	73 3	88·9	77·2	83·1	+1·3
		Noakhali	Noakhali	29 741	29 582	29·662	29·652	—	S48°E	104	93·7	73·9	87 2	77·7	82·5	+1·3
		Chittagong	Chittagong	29·708	29·524	29·623	29·668	—·004	S36°E	167	91·5	73·6	87 4	76·8	82·1	+1·5
		Chittagong Hill Tracts	.....													
Bihar.	Patna	Patna	Bankipore	29 546	29·363	29·459	29·594	+·009	S73°E	150	96·0	74·7	90·8	80·1	85·5	+1·2
		Gaya	Gaya	29·342	29·105	29·261	29 588	+·012	S45°W	87	98·2	76·3	93 2	79·7	86·5	+2·3
		Shahabad	Dehri	29·554	29·152	29·280	29 582	+·011	S0°E	105	96·8	75·0	91·5	80 2	85·9	+2·0
			Buxar	29·471	29 292	29·395	29·588	+·010	S	?	95·0	74·1	90·0	79·2	84·6	+1·2
			Arrah	29·543	29·365	29·460	29·601	—	N72°W	62	96·0	75·0	90·9 (a)	79·9 (a)	85·5 (a)	+1·2
		Saran	Chapra	29·541	29·355	29·457	29·590	—	S67°E	69	97·4	74·6	91 9	79·9	85 9	+2·0
		Champaran	Motihari	29·615	29·398	29·490 (d)	29·611 (d)	—	N87°E	140	94·4	72·3	90·1	77·6	83·9	+0·3
		Muzaffarpur	Muzaffarpur	29·562	29 367	29·468	29 590	—	S74°E	80	93 7	73·7	89·5	79·1	84·3	—
		Darbhanga	Darbhanga	29 568	29·380	29·483	29·602	+·010	N31°E	55	95·3	76·5	89·6	80·6	85·1	+1·2
	Bhagalpur	Monghyr	.....													
		Bhagalpur	Bhagalpur	29·570	29·412	29·495	29·607	+·016	S45°E	60	94·2	76·1	90·9	79·3	85·1	+1·5
		Purnea	Purnea	29·634	29·437	29·541	29 619	+·016	S5°E	65	94·2	75·2	89 8	79 3	84 6	+1 8
		Malda	Malda	29·660	29·510	29·571	29·594	—	S39°E	40	93·6	77·6	90·2	79·7	85 0	+ 1
		Santhal Parganas	Naya Dumka	29·201	29·076	29·174	29·618	+·029	S30°E	80	94·0	73·9	90·1	78 1	84·1	+1·7
Orissa.	Orissa	Cuttack	Cuttack	29·682	29·430	29 583	29 605	+·014	S0°W	52	96 4	75·2	91·8	78·6	85 2	+1·5
			False Point	29·734	29·423	29·640	29·612	+·015	S61°W	210	92·5	74·1	85 2	78·7	83·4	+0·9
		Balasore	Balasore	29·690	29·434	29·615	29·607	+·022	S35 W	78	94·4	75 3	90·0	78·6	84·4	+1·5
		Puri	Puri	29 740	29·504	29·649	29·612	—	S72°E	(a) 250	92·3	74·6	88·7	78·3	83·5	—
Chota Nagpur.	Chota Nagpur.		Gopalpur	29·736	29·534	29 655	29 614	+·021	S89°W	2.3	92·3	74·1	88 6	75·1	83·4	+0·3
		Hazaribagh	Hazaribagh	27·733	27·443	27·588	29 601	+·017	S45°W	170	91·2	71·8	86 2	74·6	80·4	+2·0
		Ranchi	Ranchi	27·622	27·352	27·535	29·598	+·019	S50°W	169	91·2	71·4	85·3	74 0	79·7	+1·7
		Palamau	Daltonganj	28·994	28 729	28·915	29·597	—	S45°E	91	96 6	75·5	91·7	78·0	84·9	—
		Manbhum	Purulia	28·917	28·657	28·830	29·587	—	N76°E	33	95 6	73·4	90·7	76·3	83·5	—
		Singhbhum	Chaibassa	28·978	28 679	28·890	29·595	+·030	S51°W	32	95·1	75·5	90·1	78·1	84·1	+1·3
Assam.	.....	Dibrugarh	Dibrugarh	29·449	29·306	29·377	29·630	—	N16°W	38	93·2	70 5	86·5	75·6	81·1	—
		Sibsagar	Sibsagar	29·476	29·310	29·388	29·677	+·005	S15°W	60	93·2	72·0	87·3	78·0	82·7	—0·8
		Tezpur	Tezpur	29·540	29·380	29·456	29·606	—	S68°E	53	93·1	71·9	87·6	77·8	82·7	—
		Kamrup	Gauhati	29·606	29·425	29·511	29·664	—	—	—	96 0	75·0	90·3	75·3	84·3	—
		Goalpara	Dhubri	29·660	29·475	29·575	29·640	+·012	S45°E	106	90·2	74·2	86 1	78·7	82·4	+0·3
		Cachar	Silchar	29·717	29·576	29·630	29·683	+·013	E	58	98·6	75·3	89·7	77·3	83·5	+0·4
		Khasi and Jaintia Hills.	Shillong	25·113	24·930	25·038	—	—	S27°E	46	79·6	60·0	74 6	64·0	69·3	—
			Cherrapunji	25·686	25·511	25·586	—	—	S22°W	(h) 17	81·3	69·0	73·0	65 5	69·3	—

(a) Mean of 30 days. | (b) Mean of 25 days. | (c) Mean of 28 days.

Bengal for the month of August 1902

Humidity.		Cloud.		Rain-fall.	District Observations.										DISTRICT.
					Rainfall—										
					Of month.					Since 16th of May 1902					
Mean, 8 A.M.	Variation from normal mean.	Mean cloud amount, 8 A.M.	Variation from normal mean, 8 A.M.		Mean of district.	Normal mean.	Variation from mean.	Number of rainy days.	Normal mean number of rainy days.	Mean of district	Normal mean.	Variation.	Mean number of rainy days.	Normal mean number of rainy days.	
	+1	7·9	−0·7	7 65	7·50	11·76	−4 26	11·00	15·30	27 12	37·13	−10·01	37·00	45 83	Burdwan.
	—	4 9	—	8·93	12·34	11·45	+0·89	16·17	15·13	37·18	39 02	−1·84	47 50	46·30	Birbhum.
86	—	7·0	—	5·31	6·98	11·80	−4·91	11 50	14·89	21·82	37·69	−15 87	34 00	45·43	Bankura.
88	—	3·9	—	13 74	13·20	12·86	+0·34	15 13	15 24	36 07	38·58	−2 51	43 14	46 30	Midnapore.
					9·56	12·55	−2·99	13 33	16·67	31·73	38·03	−6 25	46 67	40·04	Hooghly.
					11·23	11·39	−0·16	16 00	16·00	35·30	36 72	−1 33	46 00	50 78	Howrah.
80	−2	7·9	−0·4	9·98	11·14	13·29	−2 15	14 57	16 70	34 25	40·18	−5·93	43·28	42·88	24-Parganas.
87	−2	8 4	−0·4	14·01	14·01	12 09	+1·92	16·00	15·88	40·13	38·99	+1·14	48·00	54 40	Calcutta.
90	—	0 5	—	8·25	8·43	10·96	−2·53	13·60	15·00	30·67	35·02	−4 35	48·40	47·63	Nadia.
88	0	7·4	−1·8	13·57	13·21	10·45	+2·76	12 03	14 53	30·46	34 76	+4·70	47·72	45 95	Murshidabad.
90	0	6·0	−3·2	6·62	8·38	10 67	−2·29	13·00	15·37	33·75	36·77	−3·02	52·40	49·77	Jessore.
					9·99	12 32	−2·33	12·60	16·71	40·89	41·80	−0 77	47·20	52 81	Khulna.
88	—	3·1	—	13·91	11·52	10·35	+1·17	13·17	14·02	42 33	36·42	+5·91	51 07	46·40	Rajshahi.
91	—	3·7	—	9·72	15·25	12·41	+2·84	13·80	15·28	52·81	46·23	+6·58	47·80	48 79	Dinajpur.
93	—	5·8	—	20·42	30·17	26 53	+3·64	20·67	18 90	97·08	86·39	+1·69	70·57	65 80	Jalpaiguri.
90	+3	(g) 9·1	+0·2	2·30	26·43	24·96	+1·48	23·67	23·20	87 66	85·14	+2·52	75·83	75·51	Darjeeling.
92	—	8·4	—	28·66	30·73	19 28	+11·45	18·00	16 78	97·25	79·75	+17·50	63·20	60 92	Cooch Behar.
91	—	6·5	—	15 80	14·59	12·58	+2·01	15 00	12 70	52·67	51·00	+1·67	50·12	47·65	Rangpur.
90	—	7·9	—	15 79	14·03	11·48	+3·15	16·25	14·69	51·05	42·39	+8·66	55 50	49·17	Bogra.
91	—	8·1	—	9·73	9·37	11·04	−1·67	13·00	15·30	44·74	38·03	+6·71	52 00	49 19	Pabna.
90	−1	8·0	+0·7	10·73	12·48	12·59	−0·11	16·00	17 57	53·33	43·71	+9·62	59·40	55·38	Dacca.
89	—	7·3	—	19·10	16·46	14·06	+1·50	17 25	16 43	68·06	56·25	+11·77	61·03	55 75	Mymensingh.
87	—	4·2	—	14 15	11·23	11·49	−0·26	16·00	15·79	49·63	40·15	+9·48	61·00	51·79	Faridpur.
(a) 85	—	(a) 7·4	—	15·11	14·18	16·21	−2 03	17·00	19·90	77·36	55·94	+21·42	62 57	69·12	Backergunge.
91	—	6·5	—	5 40	12·12	12 78	−0·66	14 63	15 69	51·58	40·46	+5·12	54·76	53 39	Tippera.
90	—	6·0	—	32·30	23·25	23 92	−0·67	19·25	21·14	87·06	76 19	+11·67	69 75	65·77	Noakhali.
86	−2	7 1	−0·8	15·98	15·60	21·92	−6·32	15·71	19·26	84·62	78 79	+5·83	67 29	63 51	Chittagong.
					12·76	16 44	−3·68	20·50	20·53	65·21	62·58	+2 63	74·50	67 41	Chittagong Hill Tracts.
87	+2	8·1	−0·1	10·08	8·82	11·21	−2 39	9 80	13·18	23·02	32·49	−8·57	29 97	36·67	Patna.
84	+2	(a) 6 8	−2 2	5·04	6·09	11·72	−5·03	10·56	13·88	24·11	31 48	−7 37	33 23	36·03	Gaya.
81	—	6·7	—	7 70											
86	—	7 0	—	9·08	6·63	11 04	−5·01	10·00	12 90	26·25	31 12	−4·87	30·62	35 48	Shahabad.
87	—	3·8	—	8 60											
85	—	7·4	—	8 32	7·29	11·00	−3·71	11·07	12 19	20·77	31·48	−10·71	31 07	34·47	Saran.
87	—	5 1	—	15·48	12·02	12 51	−0·70	14 00	13 10	36·78*	37·44	−0·66	35 50	38 01	Champaran.
(d) 89	—	4·3	—	9·40	9 87	11 00	−1·13	11·14	12·27	27·81	31·88	−4·07	30 28	35·15	Muzaffarpur.
91	+5	7·4	+1·5	8·09	10·19	12·51	−2·32	12·60	13·74	30·50	33·00	−3 40	34·30	37·71	Darbhanga.
					6·90	11 41	−4·55	9·90	13 59	23·56	33 59	−10 03	32·30	38 18	Monghyr.
86	—	6 2	—	6 52	8·31	11 06	−3·35	12 20	13·53	26·05	34 78	−8·73	37·41	40 22	Bhagalpur.
90	+2	5 5	−2 2	10·80	13·22	14 18	−1 76	14·85	15 32	42 20	49·21	−7 01	42 13	48 51	Purnea.
89	—	5·7	—	8·48	8·48	11·07	−2·64	12·00	14·69	31·37	37·07	−5 70	41 50	46 30	Malda.
88	—	8·1	—	9·46	7·88	11 06	−3·78	12·24	15 60	34·53	35·69	−1·16	41·46	45 38	Santhal Parganas.
83	+1	6 2	−1·3	14·83	13·30	12·77	−0·53	15·13	15 51	40 42	37·33	+3 09	40 26	44 46	Cuttack.
88	0	8 0	0	15·04											
84	—	5·4	—	11 68	9·71	11·86	−2·15	13·67	15 16	34·55	36 50	−1·95	44 57	44 13	Balasore.
88	—	6 6	—	17 28	15·40	12·21	+3·09	16·13	14·60	46·80	33 63	+7·17	43 17	39 54	Puri.
84	—	4 8		9 38											
83	−3	9 5	+0·1	6·71	7·17	12·58	−5·41	12·50	16·51	25·37	36·61	−11·24	37·17	45 00	Hazaribagh.
88	—	7 5	—	11·50	10·65	13 31	−2·66	15·80	16·91	29·37	38 34	−8·97	40·80	46·05	Ranchi.
85	—	4·6	—	4·98	5·45	13·42	−7·97	10 50	14·01	19·88	34 83	−14·95	38· 0	40·19	Palamau.
84	—	5 5	—	10·57	9·20	12 55	−3·35	15·00	16 27	27·54	36·75	−9·21	40·58	46 37	Manbhum.
86	—	4 7	—	6·76	7·17	14 56	−7·39	12·67	17·02	33·45	42·31	−8 86	42·17	44·93	Singhbhum.
93	—	7·5	—	10·14											
96	+4	8·9	−0·1	20 47											
92	—	7·9	—	13·79											
80	—	7·9	—	9 65											
89	−4	7·1	−0·3	2 3·78											
90	−1	8·9	+0·5	19·76											
85	—	6·3	—	26·86											
93	—	8·1	—	84·33											

(d) Mean of 28 days. | (g) Mean of 17 days. | (a) Mean of 19 days. | (f) Mean of 29 days.

Table of Rainfall recorded at stations

Meteorological Division.	Division.	District.	Station.	1	2	3	4	5	6	7	8	9	10	11	12	13	14	15	16	17	18	19	20
SOUTH-WEST BENGAL.	Burdwan.	Burdwan	Kalna	...	0·02	0 18	0·06	0 02	...	..	..	0·03	.	1·95	0·10	0·02	...	...	...	...	...	0 20	[illegible]
			Burdwan	0·74	0·01	0·02	0·08	...	...	0·01	0·06	0·01	0 18	1·06	0·05	...	...	0·01	0·20	...	...	0 66	1·33
			Katwa	..	0·04	...	.		..	0·03	0·07	..	0·21	2·31	0·22	...	0·09	...	...	...	...	0 74	0·03
			Raniganj	0·28	0·14	0·47	0·09	0·02	0·10	0·03	0·10	0·16	0·91	1·34	0·02	...	0·14	...	0·11	1·48	...	0·17	0·81
			Mankur	...	...	0·93	1·15	...	..	...	...	...	2·61	0·93	...	0·09	1·55	0·16	1·31	...	...	0·12	0·15
		Birbhum	Suri	0·60	1·65	1·80	0·15	0·41	0·12	0·10	0·28	...	0·15	1 70	0·25	0·32	0·68	...	0·12	1·80	..	0·20	0·10
			Hetampur	0·13	1·63	1·19	0·99	0·22	0·41	0 21	...	0·79	0·06	1·25	0·07	...	0 73	...	4 50	0·71	0·14	...	0·41
			Rampur Hat	0·03	0·05	2·04		0·03	0·32	...		0·23	1·05	3·75	0·12	0·40	0·64	...	0·80	0·06	...	...	0 42
			Bolpur		0·06	0·34	0·05	0·57	0·41	...	...	...	0·48	1·75	0·15	.	0·75	...	...	...	...	...	0·22
			Murari	0·23		0·93	.	0·09	1·96	...	.	0·67	1·07	2·23	0·16	0·36	0·27	0·49	...	...	...	0·31	0·21
			Labpur	...	0·59	0·06	0·82	0 03	2·06	1·27	0·05	0·15	2·25	3·74	0·10	0·20	0·89	...	0·05	...	...	0 23	0·12
		Bankura	Bankura	0·21	0·02	0·35	0·16	0·10	...	...	...	...	...	0·80	0·02	...	...	...	...	...	0·06	0·11	1·32
			Vishnupur	0·48	0·39	0·13	0·76	0·24	...	0·04	...	..	0·30	0·78	...	0·62	0 90	...	0·21	...	0·24	1·46	0·48
			Maliara	0·16	0 34	0·73	...	...	...	...	...	0·31	1·11	0·67	...	...	...	...	0·34	...	...	0·13	1·39
			Khatra	..	0·24	...	...	...	...	0·03	...	...	0·11	0·34	...	...	...	...	...	...	0·34	0·57	0·40
			Indas	0·88	0·01	...	0·12	0·79	...	0·19	...	...	0·13	0 70	...	0·18	0·52	1·07	1·19	...	0·73	...	0·16
			Kotalpur	0·40		...	...	1 31	. .	...	...	1·10	1·15	0·75	...	...	1·95	0·34	...	0·06	0·04	0·10	0·53
			Onda	...	0·17	...	...	0·14	.	...	...	...	1·13	0 35	0·23	...	...	...	0·11	...	...	0·48	0·30
			Gangajalghati	...	...	1·62	...	0·83	...	...	...	..	0·46	0·62	...	...	...	..	...	...	...	...	0·43
			Raipur	...	...	..	...	0·70	...	1·15	...	...	0·10	...	0·92	...	...	...	...	...	...	0·10	0·05
			Sonamukhi	...	0·09	0·25	...	0·71	...	0·25	...	...	1·68	0·43	...	...	...	...	...	..	0·23	...	0·58
		Midnapore	Contai	...	...	0·40	0·27	...	...	0·08	0·73	0·70	0·11	0·36	1·37	...	...	..	...	0·15	0·04	...	0·24
			Tamluk	...	...	0·20	1·87	...	...	...	0·90	0·02	...	0·22	...	...	...	0·19	...	...	0 34	0·52	0·43
			Midnapore	...	0·72	0·83	1·47	...	.	0·14	0·03	0·17	0·68	0·40	0·07	...	0·06	...	...	...	0·06	0 68	0 80
			Ghatal	...	1·44	0·48	0·06	0·81	...	0·06	...	...	0·06	1·09	0·16	0·32	0·51	1·10	...	...	...	0·22	0·01
			Kukrahaty	...	...	0·79	0 29	...	...	...	0 10	0·60	...	0·03	0·07	...	0·75	...	...	0·.0	...	0·03	0 61
			Garhbeta	...	...	...	1·05	1·06	...	0·10	...	0·17	0·06	0·66	0·27	0·56	0·42	...	0·45	...	0·55	0·15	1 30
			Panskura	0·05	0·06	2·40	2·71	0·82	...	...	1·10	0·56	...	1·14	0·10	..	1·37	0·28	...	...	...	0·70	0·70
			Dantan	...	...	0·90	1·10	1·40	...	...	1·00	...	...	1·04	0·74	0·94	0·93	...	...	...	0·04	0·53	0·32
		Hooghly	Serampore	0·22	...	1·04	0·22	...	...	...	...	...	...	1·72	2·04	0·08	0·22	...	...	...	...	0·55	0·83
			Hooghly	0·94	...	0·35	...	0·23	...	...	...	0·19	...	1·51	0·28	..	..	...	...	...	...	0 64	0·29
			Arambagh (Jahanabad).	0·01	...	...	0·28	0·04	...	...	...	0·03	...	1·06	0·06	0·01	0·05	0·15	0·01	...	0·72	0·46	0·16
		Howrah	Howrah	2·10	...	2·26	0·16	...	...	...	0·15	0·07	...	1·85	0 47	...	...	...	0·16	...	0·52	0·07	0·67
			Mohesreka	...	...	0·29	0·13	0·42	...	..	0·35	...	0·02	0·40	0·45	..	...	0·21	...	...	..	0·17	1·45
			Uluberia	..	. .	0·10	1·85	0·19	...	0·18	0·12	0·04	...	0·72	0·19	0·25	...	.	...	...	0·32	0·15	0·40
			Amta	0·93	0·03	...	0·11	1·76	...	...	...	0·01	...	1·53	0·23	0·40	0·01	0·45	...	...	...	0·13	1·44
	Presidency.	24-Parganas	Saugor Island	...	...	0·50	0·23	...	...	0·06	0·42	0 05	0·12	0·91	0·76	...	...	...	0·17	0·05	0·13	0·08	0·17
			Diamond Harbour.	...	...	0·64	0·44	0·09	...	...	0·28	0·31	0 40	0·04	0 05	...	0·35	...	...	0·24	0·35	0 18	0·68
			Budge-Budge	...	...	...	1·98	...	...	...	0·04	0·17	...	1·54	0·17	...	...	...	...	...	...	0·21	..
			Canning Town	...	0·15	...	...	0 23	...	..	...	0·06	0·55	3·01	0·26	...	...	2·41	.	0 56	0·27	0 58	0·13
			Alipore (Obsy.)	0·64	...	0·86	0·32	0·05	0·02	...	0·14	0·04	0·01	2 71	0·34	0·17	0·07	...	0·03	...	0·36	1·32	0 61
			Barrackpore	.	...	0·65	0·27	...	...	...	...	.	.	2·25	0·30	0·15	..	...	.	...	...	0·75	0·21
			Dum Dum	0·89	...	.	0 12	...	...	...	...	0·13	...	1·92	...	...	...	...	0·14	...	...	0·09	0·25
			Barasat	0·89	...	0·10	3·82	...	0·09	...	...	0·08	...	1·59	0·52	0·06	..	0·19	...	...	...	0·55	0·31
			Basirhat	...	0·95	...	0·12	...	0·35	0·48	...	0·16	0·18	1·95	1·20	...	0·52	...	...	...	...	0·49	0·26
		Nadia	Ranaghat	1·85	0·20	0·70	0·55	0·20		...	...	...	..	2·60	0·02	...	...	...	...	...	...	0·82	0·03
			Krishnagar	...	0·03	0·04	2·21		0 19	0·01	0·28	0·02	0·14	2 06	0·52	0·27	...	...	...	.	...	0·35	0 58
			Chuadanga	0·16	1·91	0·03	1·18	0·13	...	...	...	0·10	...	1·85	0·03	0·21	0·06	..	0 06	...	0·10	0 44	0·42
			Meherpur	0·75	.	...	2·10	...	...	...	0·02	0·08	0·10	2·15	0·03	0·02	..	...	...	...	...	0·33	0·13
			Kushtia	0·50	0·27	0·04	0·30	...	0 25	...	...	0·12	0·02	2 71	0·13	0·13	1·25	0·01	.	...	...	0·40	0·07
		Murshidabad	Kandi	0·12	0·09	0·01	0·94	0·63	...	...	0·02	0·27	3·10	5·19	0·10	0·08	0·04	...	...	...	...	0·14	0·05
			Berhampore	1·02	0 04	...	0·10	0·03	...	...	..	0·03	1·22	4·25	0·08	0·11	...	...	...	...	0·16	2·21	0·50
			Lalbagh	...	0·09	...	...	0 17	...	...	...	0·24	1·50	5·50	...	0·10	...	...	...	...	...	11·05	0·30
			Azimganj	1·54	1·32	...	...	0·23	..	...	...	0·24	1·62	4·57	0·13	0·58	0·02	...	...	...	...	0·49	0·06
			Jangipur	...	0·90	.	...	0·19	1·20	...	...	2·82	0·07	2·18	0·25	...	...	...	1·91	...	...	..	1·04
			Lalgola	0·20	0 13	0·12	0·30	0·25	0·50	..	...	1·86	1·02	3·52	..	...	...	...	...	0·52	...	0·32	..
			Akriganj	0·26	1·97	0·04	...	...	0 88	...	...	...	1·44	3·78	0·08	0·36	...	...	...	...	...	0 28	1·02
			Patkabari																				
			Dumkal	...	0·08	0·50*	...	...	...	...	...	...	1·10	5·80	0·25	..	...	...	...	...	...	0·05	0·05
		Jessore	Narail	0·01	...	0·45	0·53	0·02	...	..	..	0·12	0·79	0·70	0·13	1 24	0·05	0·03	...	...	...	0·31	0·07
			Jessore	0·28	.	0 92	0·25	0·09	0·55	...	0·17	0·09	0·10	1·56	0·42	0·43	..	..	...	...	0·13	0·65	0·13
			Jhenida	.	2·45	0·15	...	...	0·02	...	...	0·02	...	4·55	0·17	0 70	0·04	...	...	...	0·25	0·05	...
			Magura	0·03	0·98	0·29	0·24	. .	..	...	...	0·04	0·15	3·00	1·17	0·05	0·03	0·04	0·63	...	0·52	.	0·09
			Bangaon	0·03	...	1·30	..	0·19	0·12	...	...	0·21	...	1·14	0·50	0·15	...	0·20	...	...	0·52	0·93	0·15
		Khulna	Satkhira	3·00	...	...	0·45	0·05	0·54	...	0·07	..	2·00	3·27	1·04		...	1·06	0·16		1·07	0·02	0·37
			Bagerhat	..	...	...	0·22	...	0·06	...	0·03	0 52	0·02	3·46	1·08	1·45	0·40	...	..	0 04	0·08	0·22	2·15
			Khulna	...	0·05	0·40	0·07	0·28	0·10	...	...	0·30	0·20	2·50	1·10	0·15	2·72	0·08		...	...	0·33	0·57
			Kaliganj	...	...	1·15	...	0·08	...	...	.	0·03	0·02	2·10	1·42		0·20	...	...	0·32	...	0·28	0·15
			Nakipur	...	...	...	0·77	...	...	. .	. .	..	0·62	2·95	0·58	0·80	.	...	...	...	0 98	...	0·08
			Dumuria	0·65	...	0·77	0·26	..	0·22	...	...	0·80	3·40	2 33	0·11	0·15	0 30	...	...	0·28	0·22	...	0·40
			Rampal	0·11	...	1·17	...	0·18	0 25	...	1·14	0·05	3 71	2·20	0·40		.	...	...	...	...	0·33	0·18
			Kalaroa	0 41	1·33	...	...	1 37	0·03	0·09	...	0 13	2·13	2·90	0·08	1·27		...	0·15	...	...	1·53	0·29
			Paikgacha	..	0·18	1·07	0·70	0 53	..	...	...	0 65	3·55	3 79	...	...	0·76	...	0·40	...	...	1·28	...
			Mollahat	...	..	0·25	...	..	0·25	0·31	...	...	1·35	2·62	...	..	0·21	...	...	...	0 02	0·12	2·13
			Morelganj	..	0·15	0·02	0·09	0·56	...	0·90	0·21	0·01	0·08	3·08	1·70	0·01		...	...	0 38	0·03	0·22	1 01
			Tala	0·22	0·51	2·10	0·60	0·08	1·03	0·68	...	0·21	1·50	3·25	1 22	0·10	0·02	...	...	. .	...	0·02	...
NORTH BENGAL.	Rajshahi.	Rajshahi	Boalia	3·08	...	...	0·75	0·03	0·24	...	.	...	1·09	4·13	0·82	0·01	0·01	...	...	...	.	0·45	0·33
			Nator	0·16	0·60	0·57	0·03	0·57	1·33	...	0·12	...	2·02	4·20	0·05	0·03	..	...	0·41	...	0·05	0·06	...
			Naugaon	..	.	...	0·22	0·12	...	...	0·39	..	2 05	3·48	0·78	0·71	0·19	...	0·12	...	0·31	0·37	...
			Lalpur	0·03	...	0·15	0·47	0 03	...	..	..	1·32	2·10	0·26	0 17	0 80	...	...	...	...	..	0·08	...
			Manda	...	..	0·12	0·51	.	...	...	...	0 43	2·90	5·11	0·95	0·12	0·52	..	...	0·21	.	...	...
			Mahadebpur	1·00	1·02	...	...	0·03	...	...	...	0·01	1·66	1·05	0·80	...	...	...	...	0·16	0·14	...	...
		Dinajpur	*Nithpur*	0·14	...	0·12	2·39	0·57	...	...	...	0 92	1·99	1·98	1·23	0·09	...	0·12	..	...	0·03	...	0·18
			Nawabganj		2·00		0·90	0·50	0 30	...	...	1·00	1·32	2·00	.	2 25	3·50	..	0·20	1·20	..	...	...
			Gangarampur	0 13	0·43	0·40	0·23	0·74	0·33	...	0·03	1·20	4·50	2·50	4·25	...	0 10	0·45	...	...	..	0·04	...
			Churaman	1·08	0 06	0·08	3·94	0·20	..	...	...	...	0·44	5·61	0·54	..	1·15	1·19	...	...	...	...	0·50
			Raiganj	1·05	0·31	2·43	0 01	0·17	0·12	0·08	0·03	...	1·07	2 57	3·91	0·14	0·83	1 07	..	0·01	...	0·11	0·06
			Dinajpur	0·.6	0·46	0·05	0 25	0·06	...	0·25	..	0 50	0·83	2 23	2 03	0·08	1·92	0·38	0 32	..	...	...	...
			Balurghat	0·56	...	0·74	0·52	...	0·87	0·10	0·52	2·04	2·44	3·17	4·52	0·18	0·67	1·11	1·25	...	...	0·11	0·23
			Thakurgaon	...	0·42	...	...	...	1·00	0 58	0·63	...	1·23	2·80	1·62	...	0·70	2·85	2·.5	...	...	...	...
			Shibganj	...	0·16	...	0·67	0·11	...	0·30	...	...	0 73	1·85	1·80	1·37	1·63	3·10	0·19	...	...	0·33	...
			Ramganj	0·08	0·01	1·10	0·46	0 82	..	...	.	...	0·81	1·78	0·81	0·64	1·07	0·26	0·10	0·02	0·22	0·05	0·22
			Atwari	0·68	0·70	0·15	0·18	0·65	0·07	0·12	0·14	0·03	0 52	4·76	1·06	0·20	.	1·78	2·59	1·23	0 59	...	0·14
			Birganj	.	...	0·75	0·92	1·07	0·05	1·69	...	...	0·75	2·65	0·58	1·01	0·58	0·53	0·12	..	0·05	0·75	...
			Parbatipur	0·33	...	0·03	1 63	0·03	0 63	1·53	...	1·41	2·80	2·25	1·85	0 03	1·43	1·32	0·29	...	0 06	0·03	...

in Bengal in August 1902.

21	22	23	24	25	26	27	28	29	30	31	Number of rainy days	Average number of rainy days.	Total rainfall for the month.	Average rainfall for the month.	Heaviest rainfall during the month.	Total rainfall from 16th May up to 31st August 1902.	Average rainfall from 16th May up to 31st August.	Station.	District.	Division.	Meteorological Division.
0·21	0·0[illegible]	...	...	0·82	0·67	0·21	..	...	...	0·03	8	13·10	4·61	11·34	1·95	26·91	35·60	Kalna ...	Burdwan.	Burdwan.	South-West Bengal.
[illegible]	0·55	...	0·75	0·01	0·15	0·02	0·01	...	...	1·58	11	14·43	7·05	11·41	1·58	26·55	37·21	Burdwan			
...	...	...	0·50	0·06	0·20	...	...	...	...	0·23	8	15·20	5·88	11·18	2·31	25·83	34·78	Katwa.			
0·15	...	0·02	1·16	0·31	0·16	0·63	...	...	...	0·14	10	16·00	8·93	13·01	1·48	30·67	39·58	Raniganj.			
...	...	0·31	1·26	0·33	...	...	...	...	...	...	12	14·31	10·03	11·79	2·61	27·10	38·47	Mankur.			
0·10	...	0·05	0·82	0·08	1·42	0·11	0·01	...	0·68	0·15	23	16·19	13·93	16·68	1·80	36·06	51·83	Suri ..	Birbhum.		
...	...	...	0·25	1·03	0·22	...	...	...	...	0·54	19	16·12	16·16	12·09	4·50	39·03	37·93	Hetampur.			
0·03	...	...	0·04	0·12	...	...	...	...	...	0·73	12	15·68	11·82	11·75	3·75	39·50	36·04	Rampur Hât.			
0·21	...	...	0·81	0·13	...	...	...	...	...	1·23	12	14·31	7·18	10·13	1·75	23·17	25·40	Bolpur			
0·17	...	...	0·77	0·23	0·21	...	...	...	...	0·03	16	13·77	10·24	10·56	2·28	47·96	39·65	Murari			
...	...	...	0·52	0·09	0·30	...	...	...	0·32	1·00	15	14·71	14·60	8·43	3·74	37·40	33·28	Labpur.			
0·18	...	...	0·72	0·43	0·01	0·15	0·05	...	...	0·62	12	16·66	5·31	11·06	1·33	24·93	37·18	Bankura ...	Bankura.		
0·05	...	0·06	1·02	0·77	0·06	...	..	...	...	0·51	16	15·52	9·97	13·18	1·48	27·53	39·21	Vishnupur.			
0·22	...	...	0·83	0·19	...	...	...	...	...	...	13	15·67	6·42	11·35	1·39	21·56	36·40	Maliara			
0·04	...	...	1·48	0·45	1·10	...	...	...	...	0·13	10	16·43	4·29	12·01	1·48	15·14	40·46	Khatra			
0·14	...	...	0·39	0·12	0·11	...	...	...	...	0·62	17	15·03	8·46	9·95	1·10	21·99	36·06	Indas.			
...	...	...	2·24	1·65	...	...	...	...	...	0·05	12	12·63	12·37	11·97	2·24	27·72	38·04	Kotalpur.			
...	...	...	1·12	0·56	...	...	..	...	...	0·54	11	13·69	5·18	11·76	1·13	18·12	34·08	Onda.			
0·10	...	0·11	1·15	0·24	...	0·15	0·02	...	...	...	10	13·63	5·72	12·17	1·02	18·11	33·27	Gangajalghati.			
...	...	...	1·50	...	...	...	...	...	...	0·20	7	16·13	4·72	14·34	1·50	19·92	41·86	Raipur.			
...	...	...	0·80	0·86	0·12	...	...	...	...	1·02	11	13·56	7·12	10·62	1·68	23·17	35·41	Sonamukhi.			
1·00	...	...	1·70	0·70	0·22	...	...	...	...	0·26	24	15·58	8·42	13·26	1·70	31·72	40·48	Contai ...	Midnapore.		
1·01	...	...	5·40	1·27	1·14	...	...	...	0·75	...	13	14·30	14·50	13·13	5·49	37·09	37·83	Tamluk.			
1·16	0·17	...	4·56	0·65	0·03	..	0·25	...	...	0·25	15	16·00	13·19	12·51	4·56	33·01	38·14	Midnapore.			
0·21	0·11	...	2·89	0·90	0·52	...	...	...	...	1·11	16	15·12	12·66	13·65	2·89	38·24	38·97	Ghatal.			
0·43	...	...	1·38	0·33	4·90	0·02	...	...	0·03	0·13	14	15·64	10·59	12·08	4·90	38·25	38·40	Kukrahaty.			
0·21	...	0·10	2·60	0·28	0·18	...	...	...	0·75	0·10	19	15·13	11·08	13·74	2·66	28·50	40·68	Garhbeta.			
0·49	...	...	7·35	0·09	0·36	0·05	...	...	1·45	0·21	17	15·75	22·23	12·46	7·35	41·09	37·41	Panskura.			
0·34	...	0·21	1·75	0·90	...	...	...	...	0·02	0·30	15	14·36	12·96	12·07	1·75	37·57	36·75	Dantan.			
0·55	...	...	1·12	0·35	2·27	0·05	0·67	...	...	0·79	14	17·43	12·93	12·06	2·27	34·40	37·59	Serampore .	Hooghly.		
0·16	...	...	0·60	0·23	2·32	0·15	0·09	...	...	1·11	14	16·26	9·20	11·72	2·32	33·71	37·29	Hooghly.			
0·23	...	...	1·40	0·44	0·23	0·02	0·18	...	...	1·01	12	16·33	6·50	13·86	1·40	27·15	39·23	*Arambagh (Jahanabad).*			
0·35	...	...	0·48	0·60	2·37	0·04	0·20	...	...	0·31	15	17·74	12·93	13·10	2·37	36·23	38·15	Howrah ...	Howrah.		
0·72	...	...	2·50	0·63	0·92	0·35	..	0·02	...	0·78	15	16·73	9·89	13·00	2·50	36·31	38·32	Mohesreka			
0·37	0·10	...	2·32	0·68	2·15	0·36	...	...	...	0·48	18	16·22	10·67	9·08	2·22	33·64	33·63	Uluberia			
1·25	...	...	0·92	0·47	1·27	0·09	...	...	...	0·50	14	?	11·67	?	1·76	31·83	?	*Amta.*			
0·60	0·07	...	2·23	0·77	1·70	0·04	...	...	0·50	1·21	14	17·00	9·08	15·18	2·23	40·80	44·30	Saugor Island	24-Parganas.	Presidency.	
0·28	...	...	1·42	0·23	3·36	0·48	0·04	...	0·15	...	16	18·06	10·02	14·18	3·36	38·11	42·32	Diamond Harbour.			
0·72	0·03	...										?		?			?	*Budge-Budge.*			
0·10	...	...	0·22	0·75	1·28	0·21	...	0·08	...	0·05	15	16·39	10·98	14·96	3·01	27·53	42·71	Canning Town.			
0·76	...	...	1·03	0·93	2·41	0·05	0·54	0·01	...	0·58	16	18·88	14·01	12·69	2·71	40·13	38·99	Alipore (Obsy.)			
0·59	...	...	1·09	0·32	2·02	0·48	0·93	0·15	...	0·79	15	15·94	11·55	11·77	2·25	31·99	36·86	Barrackpore			
0·75	...	...	0·53	1·25	3·51	...	0·06	...	...	0·28	11	16·71	9·92	12·32	3·51	33·04	38·41	Dum-Dum.			
0·44	...	...	0·43	0·65	3·04	0·05	0·74	...	0·20	1·13	16	16·46	16·14	12·04	3·82	35·90	36·17	Barasat.			
0·06	...	...	0·58	0·41	0·60	1·10	...	...	...	...	15	16·06	9·41	12·56	1·95	32·60	40·40	Basirhat.			
0·28	...	...	0·28	0·19	1·78	0·19	...	...	...	0·12	13	14·74	9·81	11·60	2·60	29·80	35·33	Ranaghat ...	Nadia.		
0·02	0·01	...	0·06	0·07	1·03	0·17	0·02	...	...	0·14	14	14·26	8·25	10·25	2·24	25·70	33·66	Krishnagar.			
0·06	0·21	...	0·03	0·31	0·79	0·20	0·03	...	0·02	0·16	16	14·68	9·66	11·11	1·99	31·92	35·01	Chuadanga.			
...	0·12	...	0·35	0·09	1·35	0·13	...	...	...	0·58	11	15·23	6·33	11·27	2·15	31·83	34·83	Meherpur.			
0·03	...	...	0·37	0·20	0·26	0·31	...	...	0·35	0·37	16	16·10	8·11	10·58	2·71	35·06	36·28	Kushtia.			
0·47	...	...	0·26	...	0·24	...	0·35	.	...	0·13	13	15·93	12·53	10·76	5·19	31·07	35·80	Kandi	Murshidabad.		
0·37	0·02	...	0·94	0·26	0·42	..	...	...	...	0·23	15	16·33	13·57	10·96	4·25	37·66	34·42	Berhampore			
0·07	...	...	1·10	0·20	0·10	...	...	...	...	...	10	16·29	21·30	12·33	11·95	58·15	36·96	Lalbagh.			
0·07	...	...	0·88	0·08	0·21	...	...	..	...	0·14	12	16·10	12·48	11·25	4·57	40·69	34·81	Azimganj.			
0·17	...	...	0·51	...	0·52	...	...	...	...	0·25	13	14·60	12·61	10·92	2·82	40·31	34·35	Jangipur.			
...	...	0·16	0·41	..	0·30	0·23	...	...	...	...	15	14·79	10·73	10·82	3·52	36·41	35·63	Lalgola.			
0·02	...	...	0·59	0·44	...	...	0·47	...	...	0·46	13	15·27	12·09	9·11	3·78	43·86	36·15	Akriganj.			
												9·79		6·82			29·30	Patkabari.			
0·24	...	...	0·50	0·12	1·40	0·10	0·18	...	...	0·53	11	13·79	10·40	11·04	5·30	31·87	35·27	Dumkal.			
0·32	...	...	0·16	0·83	...	...	...	...	0·01	0·03	11	14·30	6·16	10·19	1·28	34·[illegible]	34·71	Narail .	Jessore.		
...	...	...	0·08	0·62	0·22	...	...	...	...	0·13	15	17·03	6·62	11·22	1·56	38·30	39·98	Jessore.			
0·04	...	...	0·15	0·10	0·08	0·50	...	...	0·03	0·30	10	15·70	9·60	10·90	4·55	32·96	36·83	Jhenidah.			
...	...	...	0·35	0·30	1·04	...	...	...	0·02	0·46	13	14·07	10·46	9·47	3·00	30·76	30·13	Magura			
...	...	...	1·07	0·31	1·63	0·42	0·14	...	...	...	16	14·87	9·06	11·57	1·62	31·77	36·19	Bangaon.			
...	...	0·07	1·77	...	...	...	...	...	...	...	21	16·45	11·94	11·82	3·00	44·18	39·21	Satkhira ...	Khulna.		
0·03	0·04	...	0·25	0·93	0·65	0·54	...	...	0·20	0·12	13	17·37	12·59	12·40	3·44	49·84	47·13	Bagerhat.			
...	...	...	0·40	0·15	0·54	...	...	...	0·10	0·07	15	17·33	10·15	11·78	2·72	41·53	46·12	Khulna			
...	...	...	...	0·65	1·40	...	...	2·50	0·14	...	12	?	11·80	?	2·50	44·05	?	*Kaliganj.*			
...	...	...	...	0·68	2·15	...	...	...	...	...	9	14·01	10·21	12·17	2·05	34·33	40·72	Nakipur.			
...	...	...	1·16	1·30	0·55	...	0·10	...	0·07	0·08	17	?	12·05	?	3·40	51·98	?	*Dumuria.*			
...	...	0·08	1·00	0·05	0·87	...	...	0·14	...	0·35	15	17·50	13·13	13·42	3·71	44·25	43·12	Rampal			
0·23	0·08	...	0·60	0·80	1·21	0·18	...	...	...	0·15	16	?	15·05	?	2·90	33·02	?	*Kalaroa.*			
0·14	...	...	...	1·25	0·75	1·25	...	...	...	...	14	?	16·32	?	2·79	56·21	?	*Paikgacha.*			
...	2·02	...	1·12	1·23	0·72	...	...	...	0·25	1·30	14	?	13·06	?	2·62	62·65	?	*Mollahat.*			
0·71	...	...	0·14	1·42	2·06	0·12	...	...	0·17	...	15	?	13·92	?	2·08	78·05	?	*Morelganj.*			
...	...	0·37	0·90	0·50	..	...	0·03	...	0·11	0·37	15	?	13·40	?	3·25	54·96	?	*Tala.*			
0·02	0·47	...	0·74	0·49	0·13	0·04	...	...	...	0·11	13	14·68	13·53	10·53	4·13	45·89	36·07	Boalia ...	Rajshahi.	Rajshahi.	North Bengal.
0·03	...	...	0·11	0·20	0·75	0·50	0·25	...	...	0·41	17	16·20	13·35	11·64	4·20	41·50	30·30	Nator.			
...	...	...	...	0·15	0·32	0·48	...	...	...	...	14	14·31	11·09	9·38	3·48	44·83	37·53	Naugaon.			
...	...	...	0·60	0·12	0·50	0·40	...	...	...	1·10	13	14·81	8·83	9·61	2·10	36·43	34·16	Lalpur.			
...	...	...	0·12	1·12	1·21	...	...	...	...	...	12	12·44	13·33	9·45	5·11	49·57	34·31	Manda.			
...	...	...	...	0·89	0·42	...	...	...	...	...	10	14·52	8·87	11·58	1·66	36·72	39·02	Mahadebpur.			
0·15	...	...	...	...	0·25	...	...	...	...	...	12	?	10·43	?	2·39	40·67	?	*Nitkpur* ...	Dinajpur.		
...	...	...	...	0·30	...	...	...	...	...	...	12	?	15·47	?	3·50	50·53	?	*Nawabganj.*			
..	...	...	...	0·04	0·27	1·20	...	...	...	...	14	?	16·85	?	4·50	61·83	?	*Gangarampur.*			
..	...	...	...	0·11	...	..	...	...	...	.	10	15·21	16·18	11·08	5·61	41·44	39·90	Churaman.			
0·19	.	...	...	0·31	0·13	0·22	...	...	...	0·16	17	18·60	15·90	12·17	3·91	58·42	44·90	Raiganj.			
0·30	..	...	0·20	0·09	0·20	0·11	...	...	...	...	14	15·71	10·30	13·18	2·25	52·47	40·40	Dinajpur.			
0·61	0·02	..	...	0·14	0·76	0·07	...	...	...	...	19	15·11	20·71	10·03	4·32	53·50	33·48	Balughat			
...	...	...	...	...	...	...	...	...	...	...	10	14·77	14·32	14·97	2·85	58·30	58·36	Thakurgaon			
...	...	...	...	...	0·68	0·35	...	...	...	..	14	?	13·37	?	3·10	64·79	?	*Setabganj.*			
...	...	...	0·18	0·06	0·42	0·73	0·01	...	...	0·02	15	?	10·50	?	1·97	54·05	?	*Ramganj.*			
1·17	...	...	0·41	0·48	0·30	...	0·19	...	..	...	21	?	18·11	?	4·70	76·53	?	*Atwari.*			
..	...	...	...	0·15	0·25	...	...	...	...	...	14	?	11·89	?	2·65	57·72	?	*Birganj.*			
0·02	...	...	...	0·13	0·20	0·14	...	...	...	...	15	?	17·11	?	2·23	58·70	?	*Parbatipur.*			

Table of Rainfall recorded at stations

Meteorological Division.	Division.	District.	Station.	1	2	3	4	5	6	7	8	9	10	11	12	13	14	15	16	17	18	19	20
North Bengal—*concluded.*	Rajshahi—*concluded.*	Jalpaiguri ...	Jalpaiguri .	0·07	2 60	0·70	0·70	0·20	...	...	0·15	0·29	1·05	5·00	0·70	...	1·43	0·10	1·04	2·40	0·24	0·14	...
			Alipur Duar	...	1·81	1·08	1·31	0·79	...	...	1·95	...	5·39	8·65	...	1·08	1·54	1·48	1·07	2·16	0·38	...	...
			Falakata ...	...	0·60	0 50	1·00	...	...	...	0·75	0·39	3·06	3·15	0·59	0·49	1·30	0·03	3·45	7·05	0·25	0·10	...
			Debiganj ...	0 83	0·71	1·83	0·40	0·05	0·01	0·14	0·24	0·18	3·41	1·56	0·82	0·41	0·32	0·52	1·35	0·63	0·05	0·43	...
			Bhagatpur (Nagrakatta).	...	0·25	2 85	0·42	1·75	0·30	0·35	2·00	0·18	2·28	4·48	1·37	0·68	0·85	...	...	1·70	0·22	...	...
			Buxa .	0·36	1·77	0·97	0·62	1·82	1·05	0·60	7·97	2·60	9·09	3·85	1·26	0·40	4·20	0·04	0·14	9·24	0·21	3·97	0·65
			Kalchini ..	0·14	1·46	0·08	0·30	...	...	2 40	2·29	5·50	5·47	0·26	1·02	1·06	...	0·43	5·51	0·15	1·06	0·18	0·40
		Darjeeling ..	Siliguri ...	0·35	0·40	1·00	0·17	0·04	...	...	0·27	0·18	0·55	9·00	2·50	0·04	...	1·00	...	3·72	0·16	0·35	0·10
			Darjeeling ...	0·19	1·51	0·65	1·12	0·67	0·14	0·32	0·79	0·13	1 01	7·91	1·35	0·17	0·11	0·04	0·34	0·50	0·06	0·37	0·33
			Kalimpong .	0·61	0·75	0·44	0·02	0·07	0·12	...	0·52	0·34	0·96	4·30	1·79	0·01	...	0·23	...	0·49	0·23	0·53	0·15
			Mongpoo ...	0·09	2·05	1·38	0·72	0·12	0·48	0·03	1·38	0·31	1·10	9·06	4·90	0·33	0·36	...	...	1·68	0·38	0·50	1·10
			Kurseong ...	0·20	0·18	0·84	0·34	0·45	1·54	...	1·74	1·58	0·55	13·25	2·78	0·12	0·16	0·15	0·32	1·28	0·78	2·25	1·24
			Pedong ...	0·27	0·45	0·25	0·50	0·15	0·61	0·65	0·98	0·67	0 53	1 59	0·54	0·20	0·20	0·71	0·23	0·04	0·73	0·79	0·23
		Tibet ...	Yatung ..	0·18	0·02	1·28	1·43	0·43	0 05	0·02	0 38	0·10	0·51	1·91	0·73	0·04	0·06	0·28	0·26	0·09	0·53	0·35	0·25
		Cooch Behar	Dinhatta ..	0·54	1·18	1·12	0·13	0·71	...	...	...	1·05	3·29	4·48	2·36	1·35	0·15	5·09	1·87	1·14	0·43	...	...
			Cooch Behar...	...	1·05	0·43	...	0·05	...	0·37	1·34	0·45	3·66	6·22	2·58	1·30	0·60	4·75	1 15	1·85	0·44	0·47	...
			Mekliganj ...	0·91	0·55	0·50	1·55	0·10	...	..	1·58	1·05	5·50	4·85	1·05	0·39	0·18	0·10	1·00	7·50	0·30	...	0·07
			Mathabhanga	0·45	2·08	1·40	1·11	0·85	...	0·42	4·05	0·39	2·52	7·42	2·07	0·43	0·34	1·42	0·42	2·77	0·41	0·78	0·12
			Fulbari ...	...	1·56	0·72	...	0·25	...	3·51	0·03	3·08	2·75	9·57	3·37	0·98	0·86	2·65	3·43	4·43	0·75	0·86	...
		Rangpur ...	Bhawanigunj (*Gaibanda*).	...	1·06	0·46	...	...	0·06	0·04	0·02	0·23	3·14	1·99	1·08	0·16	1·23	0·08	0·33	...	0·12	0·02	0·53
			Rangpur ...	0·32	0·13	0·19	0·38	...	0·10	0·59	0·30	0·90	1·46	1·04	2·43	0·05	0·49	2·50	0·05	0·86	0·92	...	0·08
			Peerganj ...	1·05	0·22	0·72	0·50	...	0·32	...	...	...	3·06	2·80	1·02	0·12	0·42	0·10	1·16	...	1·02	...	...
			Kurigaon	0·12	0·05	0·49	...	...	...	0·01	0·02	0·10	4·03	2·40	3·99	0·86	0·17	2·80	0·08	0·05	1·20	...	0·10
			Gobindganj ...	1·80	0·82	0·40	...	...	0·39	..	...	...	5·05	1·20	2·11	0·02	0·19	0·38	...	...	1·08	...	0·13
			Bagdogra (*Nilphamari*)	0·60	0·59	2·30	0·29	0 33	0·47	0·53	0·35	0·34	1·16	2·15	0·62	0 82	0·67	0·09	0·11	...	0·39	0·56	...
			Ulipur ..	..	1·07	0·08	.	0·15	...	...	...	0·15	4·48	1·60	5·30	...	0·72	2·10	0·25	...	1·10	...	0·20
			Sunderganj ..	0·20	...	0·36	0·71	...	...	...	...	0·92											Not
			Saidpur	0·60	...	2·26	0·04	...	...	0·20	1·53	0·92	2·31	0·95	0·71	0·16	1·00	1·90	0·07	...	0·04	...	...
		Bogra ...	Sherpur ...	0·88	0·22	...	...	...	...	0·45	...	0·14	2·44	3·35	0·30	0·15	0·35	...	1·50	...	0·09	0·22	0·28
			Nowkhilla ..	...	...	...	...	0·16	.	...	0·10	0·40	3·50	4·10	3·42	0·55	..	0·25	0·50	...	0·90	0·40	0·20
			Bogra ...	0·64	0·02	0·02	0·38	0·30	1 45	...	...	0·52	7·30	5·14	0·26	0·51	0·02	0·25	0·34	...	0·34	0·20	0·30
			Panchbibi .	0·10	1·11	0·50	1·07	0·20	...	...	0·71	1·90	2·11	2·20	1·13	0·20	...	0·18	0·17	1·31	0·20	0·17	0·07
		Pabna ..	Pabna .	0·06	0·05	...	0·58	1·60	...	...	0·05	...	0·05	2·62	0·20	0·80	0·42	...	...	...	...	...	0·12
			Sirajganj ..	...	0·34	...	..	...	0·05	...	...	0·57	0·43	3·96	0·42	0·04	0·26	...	...	...	0·05	1·50	...
Dacca		Dacca ..	Munshiganj...	0·04	...	2·19	1·75	0·08	0·14	0·16	0·03	0·17	0·97	2·89	0·74	...	0·21	...	...	0·10	...	0·25	0·05
			Dacca ...	...	...	0·16	0·08	...	0·10	...	...	0·55	0·41	3·55	0·28	0·01	...	...	...	0·06	0·02	0·25	0·07
			Narayanganj	0·16	0·41	0·39	0·81	0·50	0 08	...	0·31	0·54	0 19	3 58	1·40	...	0·27	...	...	0·20	0·01	0·20	0·09
			Munikganj ...	1 16	0·78	2·4	0·50	0·45	0·54	...	...	0 05	0·34	2·40	1·20	0·02	...	...	...	0 00	0·98	0·10	0·24
			Jaydebpur ...	...	...	1·50	0 30	...	0·45	...	...	...	0 31	4·16	0·12	...	...	...	...	...	...	0·20	0·30
		Mymensingh.	Kishorganj	...	0·45	0·19	0·40	...	...	0·11	0·78	0·20	0·30	2·60	1·09	...	0·20	0·03	0·00	0·65	0·73	1·54	0·36
			Asia (*Tangail*)	...	...	0 25	0·41	0·10	0·88	...	...	0 21	1·30	2·50	0·40	...	...	...	...	...	0·34	0·17	0·20
			Mymensingh	...	0 40	0·10	0·07	0·09	0·38	0·02	1·47	0·35	0 72	7·96	0·57	0·11	0·33	0·03	0·30	1·98	2·37	0·10	0·26
			Jamalpur	0·18	..	...	0·50	...	0·13	...	...	1·05	3·25	4·20	0·96	1·10	0·13	...	...	0·25	1·20	...	1·15
			Netrakona ...	1·75	0·23	0 30	0·55	0·04	0·56	0·30	0·11	0·35	3·10	7·56	1·26	0·49	0·78	0·04	0·12	1·74	3·85	0·40	0·66
			Subarnakhali	Not recorded.																			
			Durgapur ..	0·08	0·25	0·24	0·20	1·31	1·10	1·05	1·04	0·05	1·32	7·10	0·64	0·40	0 80	0·10	0·30	0·30	2·60	0·10	0·20
			Sherpur Town	0·14	0·30	..	0·13	...	...	...	0·15	1·50	1·50	3·00	0·18	0·02	0·00	...	...	...	1·50	...	1·53
			Diwanganj ...	0·35	...	...	...	...	...	0·75	0·35	2·00	1·15	1·35	0·77	2·35	..	...	...	1·45	...	0·55	0·11
			Nalitabari ..	0·31	0·14	1 43	0·03	3·07	0·47	...	0·67	...	0·99	1·26	0·36	1·48	0·55	0·51	...	2·25	0·16	0·32	0·24
		Faridpur .	Madaripur ...	...	0 04	0·49	0 51	0·02	0 11	0·23	0·34	0·02	0·50	0·94	1·52	0·01	...	...	...	0·15	0·30	0·15	0·09
			Faridpur ..	...	0·64	...	1 20	0·30	1·08	...	0·02	0·08	0·07	1·97	0·05	0·41	0·45	...	2·68	...	0·94	0·05	0·03
			Goalundo .	0·21	0·13	2·78	1·90	0·37	0·07	0·03	0 11	0·16	0·15	3·21	0·22	0 11	0·10	0·09	...	0·02	0·08	0·27	0·03
		Backergunge	Patuakhali ...	0·45	0·05	...	0 55	0·38	0·02	0·03	0·19	0·65	...	4·80	0·05	0·88	...	0·65	...	0·42	0·43	0·06	0·55
			Pirojpur ..	...	0·02	0·04	3·24	0·05	0·07	...	...	0·11	...	2 72	1·16	0·16	..	...	...	...	0·09	0·07	0·31
			Barisal ...	...	0·13	0·61	0·36	0·10	0·13	0·02	0·32	0·84	0·04	3·39	0·15	0·68	0·30	0·84	...	...	0·25	0·22	0·62
			Gaurnadi ..	...	...	0·02	0·53	0·09	0·11	0·71	0·72	0·37	0·43	4·41	0 83	1·16	0·52	...	...	0·09	0·31	0·64	0·12
			Bhola ..	0·11	...	...	0·37	0 25	0·08	0·43	0·88	0·94	...	2·27	0·84	0·02	...	0·05	0·01	1·02	0· 8	0·10	0·38
			Daulatkhan ..	...	0·02	1·32	...	0·37	...	0·02	0·45	0·48	...	4·56	...	1·19	0·03	1·37	0·12	0·29	0·94	...	1·35
			Bauphal ..	...	...	...	0·54	...	...	...	0·30	0·14	...	2·51	1·25	...	...	...	0·21	0·20	3·27	0 04	0·40
Chittagong.		Hill Tippera .	Agartala ..	0·02	0·04	2·50	0·50	0·08	...	..	0·25	0·38	0·12	2 20	0·50	0·03	0·05	0·08	0·10	0·18	0·03	0·50	...
		Tippera ...	Comilla .	...	0·37	0·11	0·38	0·04	0 16	0·37	0·01	0·63	0·02	3·18	2·35	0·30	0·05	0·02	...	0·85	0·03	0·06	0·08
			Chandpur ..	0·19	...	0·11	0·89	0·38	0·09	0·12	0·11	0·42	0·03	2·55	0·39	0·07	0·04	0·03	...	0 43	0·05	0·62	0·05
			Brahmanbaria	0·78	0·32	1·00	0·22	...	...	0·06	...	0·10	2·05	3·33	0·32	...	...	...	...	...	...	0·54	0·06
			Ramchandrapur.	0·82	...	0·30	...	...	...	...	...	...	1·30	2·40	0·43	...	...	...	...	...	0·30	0·38	...
			Nasirnagar ..	..	2·30	4·24	0·32	...	0·16	...	...	0·70	0·91	3·98	0·10	0·16	0·30	...	0·10	0·40	0·16	...	0·05
			Daudkandi ...	0·10	0·40	1·90	...	...	...	...	...	...	0·95	2 50	0·74	...	...	...	...	0·30	...	...	...
			Kasba ...	...	0·20	0·60	1·43	...	0·30	0·75	0·40	0·60	0·95	2·75	0·53	...	...	0·40	...	...	...	...	0·40
			Laksam ...	...	...	...	...	...	...	...	...	...	...	...	...	...	...	...	...	...	...	...	...
		Noakhali ..	Noakhali ...	...	1 60	0·14	5·78	0·35	0·49	1·15	1·61	4·81	0·31	2·20	1·25	0·37	...	...	0·30	1·05	2·29	0·08	2·82
			Feuny ...	0·61	...	0·38	1·45	0·25	0·48	0·65	0 88	5·01	1·00	2·57	1·01	2·01	...	...	0·08	0·11	0·10	0·64	0·26
			Harishpur ...	0·27	...	0·74	0 60	0·15	0·02	0·33	2·07	0·12	0·24	2·24	2·70	0·04	...	0·02	0·08	0·39	0·08	...	0·53
			Ramganj ...	...	...	0·35	1·50	0·14	0·20	1·15	...	1·55	0·88	3·00	1·40	0·30	0·21	...	0·05	0·26	0·09	...	0·05
			Chhagalnaya	0·50	...	0·07	0 65	0·11	0·43	0·29	0·27	1·64	0·38	3·45	0·26	1·18	...	...	...	0·25	0·40	0·19	
			Hatya ...	...	0·46	0·41	3 42	0·41	0·08	0·08	0·71	0·85	0·02	3·06	1·10	0·38	...	0·27	0·12	0·58	0·06	0·37	0·48
			Lakhmipur ..	...	...	...	1·45	0·10	...	1·02	0·15	1·60	...	2·55	1·03	0·22	...	...	0·03	0·20	0·62	0·35	0·95
		Chittagong ...	Cox's Bazar ...	...	0·35	0·25	3·00	0·27	...	0·47	0·19	0·40	0·09	1·78	6·84	0 07	...	0·05	0·01	0·23	...	0·55	0·44
			Chittagong ...	0·20	...	...	0·50	0·47	0·71	0·02	0·08	0·02	0·25	8·45	1·57	2·00	...	0·05	0·05	0·30	0·03	...	0·05
			Kutubdia ...	...	...	...	1·04	0·31	...	...	...	...	0·19	8·75	1·62	1·93	...	0·08	...	...	...	...	...
			Satkania ...	...	0·18	0·27	0·19	0·21	0·19	0·10	0·32	0·05	1·15	4·05	0·11	0·05	0·07	0·12	0·03	0·30	1·05	2·06	2·30
			Kodala ...	0·51	0·05	0·12	0·05	0·30	0·10	0·05	0·10	0·14	3·39	2·21	1·05	..	0·31	...	0·32	1·05	...	0·32	0·09
			Fenua ...	0 20	...	0·50	0·00	...	...	0·04	0·10	0·20	4·00	2·06	0·05	...	0·05	0·10	0·41	0·45	...	0·34	0·04
			Mirsarai ...	0·03	...	0·09	2·20	0·57	0·74	0·17	0·48	0·76	0·13	3·67	1·38	2·49	...	...	...	0·25	...	0·32	...
		Chittagong Hill tracts.	Rangamati ...	0·72	0·23	0·18	0·29	...	0·31	...	0·09	0·62	0·17	2·09	0·92	0·38	...	1·06	0·17	...	...	...	0·34
			Bandarban ...	0·70	0·74	0·06	0·16	0·07	0·23	0·08	0·07	0·24	0·25	3 43	2 26	0·25	0·10	0·06	1·60	0·47	0·10	0·06	0·30
			Barkal ...	0·05	...	...	0·24	...	...	0·06	1·05	...	...	0·98	...	0·72	...	0·50	...	0·12	...	0·26	0·28

in Bengal in August 1902—*continued.*

21	22	23	24	25	26	27	28	29	30	31	Number of rainy days.	Average number of rainy days.	Total rainfall for the month.	Average rainfall for the month.	Heaviest rainfall during the month.	Total rainfall from 16th May up to 31st August 1902.	Average rainfall from 16th May up to 31st August.	Station.	District.	Division.	Meteorological Division.
0·35	0·16	...	...	0·45	0·30	0·20	...	...	...	0·90	21	18·38	18·97	24·40	5·00	81·34	86·85	Jalpaiguri ...	Jalpaiguri.	Rajshahi—*concluded.*	North Bengal—*concluded.*
...	0·40	...	...	1·75	...	...	0·04	...	...	...	16	16·53	31·62	23 00	8·65	105·34	93·56	Alipur Duar.			
...	0·90	0·50	...	0·58	0·10	0·19	...	...	...	...	20	16·07	26·30	21·56	7·05	88 29	81·15	Falakata.			
...	...	...	0·05	1·11	0·08	0·07	...	...	...	...	17	15·80	15·49	14·80	3·41	69·46	62·00	Debiganj.			
0·22	...	0·19	...	0·90	0·15	1·60	1·72	4·05	...	...	22	22·58	29·31	32·56	6·48	97·45	103 37	Bhusatpur (Nagrakatta).			
2·50	1·80	0·18	...	0·91	0·14	1·49	0·30	1·45	0·15	...	28	23·41	59·58	43·76	9·24	153·73	146·39	Haza.			
0·10	...	...	0·46	...	0·67	0·70	0·95	0·05	...	...	21	?	30·71	?	5·58	94 70	?	*Kalchini.*			
1·57	...	0·04	...	1·85	0·72	0·56	0·11	0·10	...	...	20	21·28	24·73	24·17	9·00	99·27	86·47	Siliguri	Darjeeling.		
...	...	0·66	...	1·76	2·15	2·23	0·09	0·08	1·34	0·06	24	24·13	37 20	25·98	7·01	88·76	85·96	Darjeeling.			
...	0·21	0·13	...	1·75	0·81	1·22	...	0·08	1·71	...	20	20·39	17·49	18·15	4·30	64·02	63·58	Kalimpong.			
0·07	1·45	...	...	1·58	1·17	3·67	0 01	0·11	2·06	...	22	21 03	37·41	24·77	9·66	106·24	86·20	Mongpoo.			
0·45	0·11	0·65	1·60	1·10	1·25	1·40	0·35	0·15	0·55	...	29	26·08	37·82	33·57	13·25	111·16	118·90	Kurseong			
0·45	0·10	...	1·05	0·12	0·09	0·60	0·03	0·01	0·43	0·15	27	26·25	14·15	23·00	1·59	55·64	69·67	Pedong.			
0·05	0·03	0·33	0·04	0·40	0·18	0·49	...	...	0·63	0·07	19	24·43	11·26	9·68	1·91	30·47	28·84	Yatung ...	Tibet.		
...	...	...	...	0·35	...	0·05	...	...	...	0·11	17	15·30	24·39	17·02	5·09	83·50	72·29	Dinhatta ...	Cooch Behar.		
...	...	...	0·03	0·40	0·70	0·05	...	0·06	...	...	17	16·73	25·46	20·42	6 92	101·05	87·17	Cooch Behar			
...	...	...	0·35	0·03	...	...	...	...	...	...	18	17·77	28·68	23 05	7·80	84·30	80·29	Mickligan).			
0·28	...	...	0·40	0·16	0·41	0·01	...	...	...	...	23	17·64	31·31	21·68	7·42	101·13	85·07	Watabhanga			
...	0·25	0·02	...	1 34	...	...	...	0·21	...	...	18	16 29	40 62	15·21	9·57	116·29	73·90	Fulbari.			
0·09	0·06	...	...	...	0·27	0·29	...	...	...	0·05	13	13·03	11·16	11·17	3·14	54·86	45·60	Bhawaniganj (*Gaibanda*)	Rangpur.		
0·09	...	...	0·21	0·16	0·10	0·08	0·03	...	...	...	18	15·35	13·80	13·09	2·50	52 10	55·67	Rangpur.			
...	...	...	...	...	...	0·50	...	...	1·04	...	15	12·28	14·43	12·83	3·06	40·66	45·01	Peerganj.			
...	...	...	...	0·08	0·26	...	...	...	...	...	13	12·12	17·82	11·26	4·83	68·88	57·40	Kurigram.			
...	...	...	...	0·08	0·10	0·7	...	...	...	...	13	12·03	13 90	12·68	5 05	44·82	48·07	Gobindganj.			
...	...	...	...	0·18	...	...	...	...	...	...	18	15·76	12·54	15·27	2·30	52·80	61·82	Hazdogra. (*Nilphamari*).			
0·19 recorded	0·18	0·02	0·06	0·06	...	0·78	...	...	...	0·07	14	11·13 11·29	18·46	10·43 14 91	5·30	49 60	50·12	Ulipur. Sunderganj			
0·13	...	...	0·09	0·35	...	...	...	...	...	...	13	?	13·61	?	2·36	55·34	?	*Saidpur.*			
...	...	...	...	0·24	...	0·54	...	...	...	...	15	15·90	11·85	11·74	3·35	48·11	41·16	Sherpur ...	Bogra.		
0·25	...	...	...	...	0·40	0·30	...	...	...	0·05	15	14·19	15·38	10·88	4·10	48·57	40·18	Nowkhilla.			
...	...	...	...	0·15	0·30	0·15	0·27	0·03	...	...	18	15·90	18·79	12 10	7·30	52·07	46·62	Bogra			
...	...	...	0·06	0·10	0·09	...	...	...	...	...	17	15·52	13·71	11·70	2·30	55·44	41·55	Panchbibi.			
0·05	...	...	0·17	0·69	0·31	0·56	...	...	0·05	0·52	13	16·52	9·00	11·22	2·62	43·90	37·46	Pabna ...	Pabna.		
...	...	...	0·10	1·28	0·25	0·27	...	...	...	0 21	12	15·87	9·73	10·80	3·06	46·53	38·58	Sirajganj.			
...	...	...	2·25	0·29	0·53	0·11	...	...	0·47	0·55	18	18·24	13·67	13·36	2·32	56·70	47·24	Munshiganj ...	Dacca.		
...	...	...	1·15	0·58	0·58	0·57	0·30	...	0·43	1·05	14	17·45	10·02	12·38	3·35	45·45	43·10	Dacca			
...	...	...	0·85	0·23	0·41	0 30	...	...	0·47	0·91	19	17·83	12·06	13 50	3·58	53·23	44·40	Narayanganj.			
0·10	...	...	1·10	0·90	0·40	0·40	...	...	0·38	...	20	0·60	15·78	11·45	2·40	55·42	38·71	Manikganj.			
...	0·13	1·60	0·60	...	...	...	...	...	...	1·20	13	17·80	10·87	13·08	4·16	54·84	45·16	Jaydebpur.			
...	0·66	...	...	0·06	0·13	...	...	...	...	0·09	16	16·46	10·45	13·84	3·60	55·70	52·90	Kishorganj ...	Mymensingh.		
0·25	...	...	0·05	1·10	1·30	0·55	...	...	...	1·10	15	13·94	10·32	11·15	2·50	48·91	39·41	Atia (*Tangail*).			
0·05	...	...	...	0·04	1·07	0·13	...	...	0·05	0·16	18	18·90	19·10	14·70	7·06	75·78	58·29	Mymensingh.			
0·46	0·25	0·05	...	...	...	...	0·25	...	1·17	0·25	17	16·19	16·63	13·64	4·36	54·35	47·62	Jamalpur.			
...	...	...	...	0·06	1·54	0·15	...	...	0·60	...	21	19·56	27·09	17·56	7·56	104 52	67·83	Netrakona.			
0·25	0·10	...	Not recorded.	...	0·05	2·05	0·20	...	...	...	22	13·71 12·79	23·03	10·13 24·94	7·10	93·88	40·42 92·70	Subarnakhali. Durgapur.			
0·20	...	0·15	...	...	...	0·47	0·08	...	...	0·07	...	16	16·75	12·38	16·18	3·00	58·59	55·98	Sherpur Town.			
...	...	...	...	0·75	0·58	...	...	...	...	...	13	12·03	12·71	12·48	2·25	55 85	50·90	Diwanganj.			
0·03	2·28	...	0·03	0·32	1·38	...	...	0·85	...	0·02	20	?	27·94	?	9·99	90·51	?	*Nalitabari.*			
0·02	...	...	0·02	0·24	0·48	...	...	...	0·40	0·28	15	16·32	6·70	11·25	1·52	48·18	30·92	Madaripur ...	Faridpur.		
0·14	...	...	1·12	0·56	0·06	0·07	...	...	0·07	0·88	14	16·22	14·15	12 08	3·68	56·12	42·36	Faridpur.			
1·00	...	...	0·30	0·21	0·83	0·14	...	...	0·07	0·36	19	14·83	12·74	10·55	3·21	44·59	36·18	Goalundo.			
0·75	0·03	...	0·03	1·15	3·02	0·48	0·35	...	0·28	0·07	18	21·21	17·40	18·14	4·80	82·55	63·50	Patuakhali ...	Backergunge.		
0·22	...	...	0·20	1·02	0·86	0·17	0·03	...	0·22	0·10	13	18·65	10·87	13·98	3·24	57·09	40·37	Pirojpur.			
0·34	...	...	...	0·29	1·49	0 77	...	.	0·34	0·05	20	18·74	12·36	13 89	3·00	78 52	49·97	Barisal.			
0·23	...	...	...	0·25	0·72	1·31	0·02	.	0·14	0 21	20	17·25	14·74	13·78	4·41	6; 61	44·01	Gaurnadi.			
0·50	...	...	0·07	0·55	3·82	0·18	0 77	...	1·08	0·03	18	21·83	10·47	17·53	3·82	81·38	57·73	Bhola			
...	...	...	1·59	0·54	0·77	0·15	...	...	0·35	0·03	17	20·44	10·74	19·41	4·50	84·10	68·06	Daulatkhan.			
1·11	...	...	...	0·62	2·70	...	...	0·03	0·33	...	15	21·19	10·71	18·78	2 70	96 47	58·93	Banphal.			
...	0·70	...	0·06	0·15	...	0·22	0·03	...	...	...	13	16·24	8·76	11·34	2·50	47·51	43·61	Agartala ...	Hill Tippera.		
0·07	...	...	0·74	0·20	1·11	0·02	0·32	0·17	0·75	3·18	17	17·14	15·49	18·80	3·18	52·60	56·56	Comilla ...	Tippera.	Chittagong.	
0·32	...	..	0·01	0·46	1·45	0·65	...	...	0·16	0·53	17	20·70	9·92	17·31	2·55	56·26	52·27	Chandpur.			
0·11	...	...	0·37	...	0·31	...	0·48	0·07	...	0·39	14	15·36 12 87	10·48	12·95 10·72	3·33	46·11	44·57 39 17	Brahmanbaria. Ramchandrapur.			
0·26	...	...	...	...	...	...	...	...	...	0·85	9	13·60	7·04	11·25	2·40	55·15	41·83	Nasirnagar.			
0·09	...	0·04	2·34	0·44	1·32	0·20	...	...	2·12	0·50	19	15·60	21·00	10·60	4·26	64·03	41·04	Daudkandi.			
...	...	...	...	0·80	...	...	0·60	...	...	0·74	10	14·00	9·33	9·96	2·50	61·55	43·05	Kasba.			
0·30	...	...	...	2·00	0·60	...	...	0·40	1·40	1·11	18	15·73	14·90	15·71	3·73	61·44	55·79	Laksam.			
1·63	...	...	...	3·00	1·78	...	...	0·04	0·25	0·05	20	22·58	32·20	23·93	5·78	108·63	75·21	Noakhali ...	Noakhali.		
0·19	...	0·12	0·05	0·32	1·37	..	1·06	..	1·68	0·14	22	21·46	21·93	23·84	5·01	87 41	78·64	Fenny.			
0·90	0·01	...	0·02	1·35	0·93	0·13	0·02	1·42	1·80	0·03	19	20·80	25·28	29·87	6·60	101·47	93·12	Harishpur.			
0·78	...	..	...	0·61	..	1·06	...	...	...	0·21	16	19·73	13·87	18·38	3·00	80·26	58·16	Ramganj.			
...	...	...	0·22	...	0·30	...	...	0·38	1·92	1·10	20	?	15·03	?	3·45	74 89	?	*Chhagalnaya.*			
1·39	...	...	0·30	0·10	2·32	0·12	...	0·14	4·97	0·08	22	?	23 91	?	4·97	103 15	?	*Hatya.*			
0 85	..	...	...	1·02	1·80	0·80	...	...	0·15	...	17	?	16·39	?	2·55	65·66	?	*Lakhmipur.*			
0·73	...	0·03	0·13	0·41	0·62	.	0·23	0·01	0·01	1·27	18	20·45	18·90	27·67	6·84	110 54	106·02	Cox's Bazar	Chittagong.		
...	0·01	0·02	0·16	0·11	0·28	...	0·09	0·33	1·02	0 06	13	17·94	16·46	20·17	5·45	87·97	71·73	Chittagong.			
0·80	...	...	0·03	0·38	..	0·54	0·52	0·02	0·05	0 20	12	18·10	17·76	23·81	8·75	91·19	85·89	Kutubdia.			
0·15	0·05	0·13	0·74	...	...	...	...	...	...	...	18	19·81	13·02	18·17	4·05	67·97	70·54	Satkania.			
...	...	1·02	...	0·11	...	...	2·62	0·30	0·28	...	18	21·23	14·70	18·73	3·39	70 75	63·99	Kodala.			
..	...	0·71	0·13	0·18	...	...	1·28	0·78	0 03	...	16	18·38	12·32	10·35	4·00	82·04	71·66	Fouca.			
...	...	0 03	0·08	.	0·61	...	...	0·47	0·95	...	15	18·75	15·47	25 57	3·67	81·86	82·67	Mirsarai.			
0·20	0·16	...	0·26	...	0·15	...	0·00	1·32	0·33	0·40	20	21·55	10·54	17·61	2·09	61·33	59·03	Rangamati ...	Chittagong Hill Tracts.		
0·60	0·31	0·35	1·05	...	0·05	0·04	...	0·46	0·17	0·22	21	19·50	14·07	15·27	3·43	69·07	66·11	Bandarban.			
...	1·96	0·06	...	0·35	...	...	0·06	..	1·94	0·54	13	?	10·00	?	1·96	35·74	?	*Barkal.*			

Table of Rainfall recorded at stations

Meteorological Division.	Division.	District.	Station.	1	2	3	4	5	6	7	8	9	10	11	12	13	14	15	16	17	18	19	20
BIHAR.	Patna.	Patna ..	Patna	...	0·03	...	1·38	1·08	0·42	...	...	0·43	0·16	0·15	..	0·08	...	...	...	...	...	1·24	
			Dinapore		0·10	...	1·37	0·75	0·72	2·00	...	0·02	0·15	0·27	...	0·05	...	...	...	...	0·42	1·07	
			Bihar	0·63	0·13	0·83	0·12	...	...	0·15	0·57	...	0·02	0·34	...	0·02	...	...	...	...	0·02	0·01	
			Barh	...	...	...	0·53	...	...	...	...	...	0·75	0·34	...	...	...	...	...	...	...	2·75	
			Bikram	1·10	...	...	0·12	...	0·06	0·30	0·03	...	...	0·45	...	...	...	...	...	...	0·75	2·04	0·20
			Hilsa ..	0·20	...	...	0·83	0·05	...	...	...	...	...	...	0·85	...	...	...	...	...	...	...	...
		Gaya ...	Aurangabad .	0·99	0·38	...	0·28	1·51	0·04	1·36	...	0·59	0·97	...	...	...	...	...	...	...	...	0·19	...
			Gaya ...	0·05	...	0·05	0·01	0·05	0·70	...	...	0·17	0·09	0 23	...	...	...	...	...	...	...	0·17	0·21
			Nawada ...	0·10	0·02	0·24	0·01	.	0·24	0·33	0·58	...	...	0·42	0·01	...	...	...	...	...	...	0·10	0·03
			Jahanabad ...	1·57	0·02	0·06	1·28	0·32	..	0·16	0·15	1·10	0·34	0·25	...	...	...	...	...	...	0·01	1·64	0·01
			Arwal ...	0·30	...	...	1·65	...	0·12	1·50	...	0·46	0·48	...	...	...	...	...	...	...	...	0·78	0·27
			Daudnagar ...	...	...	0·65	0·09	1·02	0·12	...	0·72	0·10	0·04	...	...	...	...	...	...	0·20	...	0·38	...
			Sherghati ...	...	...	...	0·12	0·08	0·02	0·23	...	1·85	0·24	0·02	...	...	...	...	...	...	0·76	0·26	...
			Rajauli ...	0·07	...	0·20	0·75	0·20	0 9..	1·00	...	...	0·93	...	...	...	...	...	...	...	...	0·25	0·04
			Pakri Barawan	0·12	2·60	0·15	...	...	...	...	...	1·30	0·22	...	...	...	...	...	...	...	3·15	0·39	...
			Deo ...	0·80	...	...	0·28	0·20	0·10	6·35	...	...	...	...	...	0·31	...	...	...	...	...	1·27	...
		Shahabad ..	Buxar ...	0·99	...	...	1·36	0·15	0·10	...	1·17	2·41	0·03	0·07	...	...	...	...	...	...	0·02	0·50	0·03
			Dehri ...	1·07	...	...	0·37	0·15	0·05	1·10	...	0·85	...	0·05	...	...	...	...	...	...	0·23	0·85	0·13
			Bhabhua ...	0·3	0·15	...	2·21	0·08	...	1·31	..	...	0·10	...	...	...	...	...	...	...	...	0·21	...
			Sasaram ...	1·00	0·14	...	1·88	0·04	...	0·29	...	0·41	...	...	...	...	...	...	...	...	...	0·78	...
			Arrah ...	0·55	...	...	...	0·24	1·08	0·93	...	...	0·50	0 30	...	...	...	...	...	...	...	1·21	0·22
			Mohanea ...	0·15	...	...	0·75	...	...	...	0·30	0·35	...	...	...	...	...	...	0·10	...	...	1·00	...
			Khiri ...																				
			Ageaon ...	...	...	0·16	...	...	1·32	...	0·15	0·33	0·35	...	...	...	...	...	...	...	0·13	...	...
			Ramagar ...	...	...	...	...	1·36	0·20	...	...	1·20	...	0·40	...	...	...	...	...	...	...	...	...
			Koath ...	1·05	...	...	2·56	1·49	1·35	...	0·07	...	...	...	...	...	...	...	...	...	...	...	...
			Sikroul ...	0·30	...	...	2·13	0·28	2·30	...	...	0·10	...	...	...	...	...	...	...	...	...	...	...
			Bassowan ...	...	...	...	0·08	0·38	0·37	0·12	...	0·35	...	...	...	...	...	...	...	...	0·80	...	...
			Monasharpur	...	...	...	0 60	...	0·30	..	0·20	0·15	...	...	...	...	...	...	...	...	0·99	0·41	...
		Saran ...	Gopalganj ...	...	...	0·81	0·25	...	...	0·17	...	3·10	0·41	0·33	...	...	...	...	...	...	0·25	...	...
			Siwan ...	0·95	0·40	0·25	0·05	...	...	0·05	...	1·87	0·03	0·10	...	...	...	...	...	..	...	...	...
			Ekma ...	0·17	...	...	0·32	...	...	0 43	...	0 67	2·05	...	...	...	...	...	...	...	...	1·33	0·40
			Chapra ...	0·03	...	...	0 80	0·32	0·03	0·15	0·30	0 02	0·02	0·20	0·04	0·12	...	...	...	...	0·20	2·04	...
			Hathwa ...	0·28	0·24	...	0·30	...	...	0·42	...	1·36	0·09	0·15	...	...	...	...	...	...	...	0·90	0·03
			Amnour ..	...	...	0·40	1·00	0·05	...	0·40	...	...	0·46	0·01	0·04	...	...	...	...	...	0·21	...	...
			Basantpur ...	...	...	...	...	0·18	...	0·10	...	...	0·08	0·12	0·09	...	...	...	...	...	0·08	3·39	0 61
			Darauli ...	0·38	0·04	...	...	1·65	0·02	0·25	0·10	2·65	0·08	...	...	...	...	...	...	...	...	1·50	0·10
			Bhorch ...	0·23	...	...	1·63	0·25	...	0·15	...	0·34	1·65	0·30	...	...	...	...	...	...	...	0·19	0·50
			Sripur ...	0·17	...	...	0 83	0·46	...	2·15	...	...	3·18	0·38	...	0·02	...	...	...	...	0·63	...	0·17
		Champaran ..	Motihari ...	...	0·18	2·16	0·04	0·11	...	...	...	...	1·25	0·57	1·24	1·72	...	...	0·39	...	3·02	0·53	0·09
			Bettiah ...	...	...	0·08	0·75	0·30	0·30	...	0·02	2 02	1·88	1·04	1·17	0·76	...	...	...	0·10	1·77	...	...
			Bagaha ...	0·56	0 01	...	0·34	0·40	...	...	1·80	0·44	0·51	0·06	2·83	0 33	...	...	...	0·33	2·51	0·19	...
			Burnurwa ...	...	...	...	0·03	...	2·00	0·30	...	0·32	0·10	0·50	0·04	0·05	...	...	...	...	0·90	0·10	...
			Ramnagar ...	...	...	...	...	0·50	...	...	...	1·03	...	...	3·50	...	0·50	...	...	...	1·00	...	...
		Muzaffarpur...	Sitamarhi ...	...	...	0·76	...	1·31	...	...	...	...	0·71	0·47	..	...	...	...	0·44	...	0·25	0·54	1·45
			Muzaffarpur	0·01	...	...	0·25	1·23	...	...	0·04	...	0·03	0·42	0·09	0·06	...	...	...	...	...	...	1·06
			Hajipur ...	...	...	...	0·25	0·51	0·43	0·78	...	0·05	0·20	0 63	0·01	0·08	...	...	...	...	0·62	1·42	0·01
			Paru ...	0·20	0·96	...	0·10	...	...	...	...	0·10	0·10	0·30	...	...	...	...	...	...	...	...	2·30
			Mahua ...	...	...	0·07	0·08	0·26	0·14	...	...	1·87	0·23	...	...	...	...	...	...	...	...	...	0·41
			Shluhar ...	...	...	0·15	...	...	...	..	...	...	2·60	0·50	0·50	1 00	0·30	...	...	0 28	2·03	0·11	...
			Paprl ...	...	...	1·58	...	...	...	...	...	...	1·83	0·44	1·05	...	...	2·40	1·27	1 55	...	1·30	0·24
		Darbhanga ...	Tajpur (Samastipur).	0·06	0·01	1·75	2·32	1·01	0·38	0·45	...	...	0·23	0·42	0·07	...	...	...	...	...	0·55	...	0·09
			Darbhanga ...	...	...	0·71	0·01	...	...	0·06	...	0·34	0·29	0·04	0·18	1·18	0·83	...	...	...	...	0·01	0·32
			Madhubani ..	0·02	..	0 78	0·12	0·04	0·05	...	...	0·02	0·45	0·86	1·36	0·96	0·33	0·37	0·27	0·14	...	0·20	1·00
			Bahera ...	...	1·35	0·37	...	...	...	...	...	...	0·70	0·29	0·80	1·00	...	2·28	...	...	...	0·08	0·82
			Koserha .	0·18	...	2·25	0·06	0·02	0 38	..	...	...	0·08	0·50	0·02	...	...	...	0 12	0·52	...	...	...
	Bhagalpur.	Monghyr ...	Begusarai ..	...	...	1·11	0·05	...	1·20	...	0·70	...	0·20	0·50	0·21	...	...	...	...	0·37	...	...	...
			Monghyr ...	...	...	2·03	0·31	...	0·12	...	0·28	...	0·21	0·87	0·12	0·13	...	...	...	...	1·31	...	...
			Jamui ...	0·46	...	1·01	0·10	1·11	0·73	...	...	0·04	...	0·91	...	0·10	...	...	...	...	...	4·80	...
			Gogri ...	...	...	0·49	0·14	...	0·48	...	...	...	...	1·33	...	...	...	...	...	...	...	...	...
			Jamalpur .	0·09	...	1·63	.	..	0·42	...	0·54	...	0 32	1·45	0·10	...	...	...	...	...	...	...	...
			Shaikhpura	...	...	0 65	0·36	...	0·15	...	0·10	...	0·40	..	...	...	...	...	...	...	0·05	...	...
			Chakai Bamda	0·69	0·01	0·44	0 02	0·65	0·05	...	...	0·17	0·41	0·79	0·01	0·00	...	...	...	...	...	1·30	...
			Chupreon ...	0·65	...	1·00	.	...	...	...	...	...	0·04	2·12	0 51	0·44	...	...	...	...	...	...	...
			Gidhour ...	1 55	...	1·20	0·10	0·45	...	...	...	...	...	0·72	..	...	...	...	...	...	...	...	...
			Khargpur ...	0·70	0·03	1·46	0·20	0·80	0·04	...	...	...	0·53	1·33	0·00	...	...	...	...	0·08	...	2·07	0·25
		Bhagalpur ...	Madhipura .	0·05	...	1·10	0·01	...	0·02	0·01	0·08	...	0·52	2·17	0·70	0·24	0·18	0·22	0·17	...	...	0·35	0·12
			Bangaon (Sylabad).											3 57		1 23	1·25						
			Supaul ...	0·32	...	...	0 30	0 01	...	0·52	0·60	...	0·70	2 25	0·50	1·20	0·21	1·00	0·20	0·02	...	0·51	0·00
			Pratapganj ...	0·35	0·27	2·05	0 14	0 85	0·27	...	...	0·12	1·18	5 86	1·10	1·50	0·43	0 18	...	0·03	0·03	0·15
			Bhagalpur ...	1·16	...	0·43	0·10	0·05	0 09	...	0·30	..	0 ·7	1·50	0 30	...	0·08	...	0·04	...	...	0·45	...
			Banka ...	...	0·35	1·75	...	0·05	...	...	0·68	...	...	0·46	...	...	...	...	...	...	...	...	...
			Colgong ...	0·70	...	...	1·05	...	...	...	...	0·15	0·60	1·58	0·38	...	...	...	...	...	...	...	0·46
			Bansil ...	1·25	1·57	0·30	...	0·30	...	...	...	0 75	0·35	1·23	...	...	...	...	...	...	...	...	...
		Purnea ..	Kishanganj ...	0·36	0·51	0·26	0·18	1·83	0·05	0·06	0·31	0·44	0 05	3·02	1·86	1·53	2·01	0·11	0·02	2·10	0·45	...	0·35
			Araria ..	0·22	0·05	0·27	0·04	0·30	1·55	1·32	.	0·07	1·51	4·15	1·55	0·40	0·83	1·30	0·81	0·99	0·04	...	0·09
			Purnea ..	0 48	...	0·11	0·18	1·05	0·22	0 15	...	1·61	0 27	3 30	0·30	0·37	0·44	0·11	0·10	0·14	...	0·20	0·01
			Gondwara (*Korah*).	...	...	0·85	0·33	...	...	...	0·18	...	3·13	0·15	0·03	0·74	0·02	0·15	...	...	0·25	0·05	0·15
			Barsoe	0·30	1·00	...	...	...	0·30	0 51	...	...	...	0 30	1·80	3·40	2·50	...	0·39	...	...	...	...
			Forbesganj ..	1·36	1·26	...	0·30	0·20	0·65	...	...	...	0·50	0 10	2 75	2·00	0·80	0·90	...	0·30	...	...	...
			Kalliganj .	1·08	1·08	0·40	...	0·10	...	...	0·75	...	4·35	2·50	0·30	0·15	...	...	...	0·20	0·40	0·10	0·30
		Malda ...	Malda ...	0·03	...	0·34	0·22	0·18	...	...	...	0·35	1·70	2·15	0 2..	0·70	0·07	...	...	...	...	0·20	0·16
			Chanchal .	1·35	...	1·37	0·70	.	...	...	...	...	1·71	2·52	0·01	...	1·22	0 78	...	...	...	0·22	...
			Gajol ..	1·18	0·22	0·10	0·62	0·42	...	...	...	...	0·48	2·01	1·52	...	0·18	0·46	...	...	...	...	...
			Sibganj ...	1 80	...	0·22	0·24	...	...	...	...	1·00	1·00	...	...	0·25	0 49	...	...	...	...	0·03	...
		Sonthal Parganas.	Rajmahal ...	...	...	0·40	0·10	1·15	...	...	...	0·22	1·70	1·10	...	...	0·45	0·12	...	...	...	0·15	...
			Godda ..	0·91	...	...	...	0·10	0 15	...	0 02	0· 5	0 05	1 55	...	0·33	...	...	...	...	0·01	0·15	0·03
			Pakaur ...	0·07	1·54	1·10	.	...	0·17	...	...	0 35	1·58	2 26	0·08	0·10	0·23	...	...	...	...	0·05	1·50
			Naya Dumka	...	0·07	0·06	0·13	0·90	...	...	...	0·02	0·14	3 05	0·34	0·27	...	0·26	0·05	1·96	0·02	0·06	...
			Deoghur	0·37	...	0·25	0·34	...	...	...	...	...	...	1·19	0·13	...	...	...	...	...	...	0·16	0·04
			Jamtara ..	...	...	0·73	0 15	0 74	1·63	...	...	0·03	0·14	1·32	0·01	0·03	0·02	...	0·35	0·45	...	...	...
			Mohagama ...	0·24	...	0·20	1·06	1·15	...	...	...	...	0·30	1·05	0·04	...	1·02	...	...	...	0·16	0·07	0·06
			Nasilhat ..	1·02	0·15	...	..	1·00	...	...	...	..	0·75	...	...	...	...	...	...	...	...	0·34	...
																							0·62

n Bengal in August 1902—*continued.*

21	22	23	24	25	26	27	28	29	30	31	Number of rainy days.	Average number of rainy days.	Total rainfall for the month.	Average rainfall for the month.	Heaviest rainfall during the month.	Total rainfall from 16th May up to 31st August 1902.	Average rainfall from 16th May up to 31st August.	Station.	District.	Division.	Meteorological Division.
...	...	...	0·37	0·62	0·39	0·06	...	...	0·38	2·18	12	13·52	10·06	10·74	2·18	23·79	31·13	Patna ..	Patna.	Patna—concluded.	Bihar.
·16	0·05	...	0·20	0·55	0·38	0·12	...	...	0·00	2·39	15	13·39	11·05	11·56	2·39	25·92	33·02	Dinapore.			
...	...	...										14·42		11·26			32·30	Bihar.			
...	...	...	2·80	...	...	...	...	...	...	0·80	6	12·00	7·98	10·47	2·75	24·11	30·11	Barh.			
...	...	...	0·15	2·11	...	...	...	...	0·27	1·03	11	13·43	8·91	11·27	2·11	21·73	31·52	Bikram.			
...	...	...	...	...	...	...	...	...	...	2·70	5	13·29	5·50	11·56	2·70	22·55	33·86	Hilsa.			
...	...	...	0·12	0·04	0·01	...	...	0·02	...	0·37	10	14·48	6·87	13·52	1·51	29·34	33·87	Aurangabad..	Gaya.		
...	...	0·14	0·11	0·14	0·12	0·06	0·50	...	0·23	1·28	13	14·26	5·04	11·08	1·28	24·22	31·04	Gaya.			
...	...	...	0·10	0·02	0·57	0·05	0·07	...	...	0·38	10	13·74	6·87	12·42	3·10	24·36	31·51	Nawada.			
...	...	...	0·01	0·04	0·16	0·03	0·50	...	...	1·21	12	13·71	8·86	13·00	1·64	27·07	32·86	Jahanabad.			
0·25	...	...	...	0·07	0·02	0·09	0·12	...	...	1·05	12	11·88	7·65	9·98	1·65	21·67	30·31	Arwal.			
...	...	...	...	1·05	...	...	...	...	0·65	...	9	14·06	5·02	11·40	1·05	23·48	30·83	Daudnagar.			
...	...	...	...	0·01	0·05	...	0·19	0·73	...	0·11	8	14·31	8·94	11·59	1·85	18·29	29·13	Sherghati.			
...	...	...	...	...	...	0·15	...	...	0·60	...	10	16·00	5·85	12·02	1·00	25·25	33·11	Rajauli.			
...	...	...	0·50	0·12	1·50	...	...	0·08	...	0·69	11	12·00	10·71	11·46	3·15	23·80	31·44	Pakri Barawan.			
...	0·08	...	0·35	...	0·16	...	...	0·43	...	0·15	11	?	10·40	?	6·35	33·38	?	*Deo.*			
...	...	...	...	0·09	0·78	0·02	0·03	0·02	0·71	0·07	10	13·35	9·08	11·29	2·40	23·97	29·01	Buxar ..	Shahabad.		
0·01	...	...	...	0·25	0·22	0·01	...	...	...	2·13	11	14·44	7·70	12·02	2·13	30·06	31·06	Dehri			
0·08	0·56	...	...	...	0·08	...	...	...	...	0·27	8	14·29	5·39	12·33	2·21	25·85	30·45	Bhabhua.			
...	...	...	...	0·84	0·14	0·23	...	0·03	0·05	0·25	11	14·06	6·79	12·49	1·89	26·78	30·36	Sasaram.			
...	...	...	...	1·52	0·27	...	...	...	0·44	0·88	11	12·87	7·80	10·50	1·52	26·36	31·55	Arrah.			
...	...	...	0·45	...	...	...	...	1·20	1·50	0·90	9	11·00	5·70	13·20	1·50	24·23	33·58	Mohanea.			
												12·11		11·50			30·61	Khiri.			
...	...	...	1·17	0·11	0·56	0·07	...	0·08	0·16	0·38	11	10·00	4·87	9·22	1·22	23·03	33·52	Agaon.			
...	...	...	0·43	...	0·14	0·11	...	0·23	0 12	...	9	13·67	4·18	10·37	1·36	17·12	30·93	Ramagar.			
0·20	...	...	...	0·20	1·10	...	0·75	...	...	1·45	9	13·44	10·72	11·62	2·56	29·76	31·01	Koath.			
0·40	...	...	...	0·22	0·13	...	0·12	...	0·13	0·25	12	13·44	7·41	11·37	2·56	26·11	28·58	Sikroul.			
0·38	...	...	0·06	0·14	0·01	0·14	...	...	3·33	0·13	12	13·29	7·50	12·04	3·33	30·03	32·15	Bassowan.			
...	...	...	...	0·31	0·50	...	...	0·09	...	0·39	8	13·78	2·79	13·51	0·60	22·38	31·61	Monoharpur.			
...	...	...	0·52	0·80	...	...	...	1·24	...	0·10	10	11·36	7·73	10·31	3·10	26·20	31·28	Gopalganj ...	Saran.		
0·07	...	...	0·23	0·05	0·14	...	...	0·01	0·01	0·04	10	13·74	6·55	11·51	1·87	20·48	31·58	Siwan.			
...	...	...	0·40	0·72	...	0·33	...	...	...	0·58	12	13·75	8·57	11·43	2·05	23·38	31·89	Bkma.			
0·32	...	...	0·40	0·98	0·30	0·04	...	...	...	1·32	13	12·01	6·33	9·73	1·32	15 78	28·27	Chapra.			
...	...	0·37	0·18	0·13	...	...	...	...	...	...	11	?	4·73	?	1·36	21·02	?	*Hathua.*			
0·51	...	0·24	0·36	0·35	...	0·43	0·10	...	0·40	0·91	14	11·75	9·70	11·74	3·39	23·66	34·15	Amnour.			
0·04	0·15	0·03	0·43	0·32	0·13	0·50	...	0·50	...	0·05	13	9·38	4·89	10·35	1·50	16·13	31·86	Basantpur.			
...	...	...	0·11	0·39	0·31	...	...	...	0·03	...	10	?	6·90	?	2·85	18·41	?	*Darauli.*			
...	...	...	0·20	1·05	...	...	...	...	0·02	...	10	?	6·01	?	1·65	23·38	?	*Bhoreh.*			
...	...	0·32	0·44	0·45	...	...	...	0·87	0·02	...	11	?	10·01	?	3·18	20·41	?	*Sripur.*			
0·04	...	0·59	0·41	...	0·14	0·02	0·03	...	2·95	0·16	15	12·97	15·48	12 23	3·02	44 99	35·49	Motihari ...	Champaran.		
0·05	...	0·35	0·78	...	...	...	...	...	0·52	0·12	14	12·90	13·06	12·23	2·02	38·95	30·51	Bettiah.			
...	...	0·77	2·18	...	...	0·10	...	0·06	0·95	0·01	15	14·19	14·31	14·01	2·88	36·63	45·06	Bagaha.			
...	...	0·69	0·16	0·60	...	...	...	...	0·27	0·19	13	12·09	6·22	12·76	2·00	26·30	34·27	Surhurwa.			
...	...	...	1·00	...	...	...	...	...	1·00	...	7	?	8·50	?	3·50	36·07	?	*Ramnagar.*			
...	...	3·08	0·04	...	...	0·02	...	...	0·61	0·04	10	11·23	9·72	9·61	3·08	30·61	32·47	Sitamarhi ...	Muzaffarpur.		
0·24	...	0·10	0·23	0·35	...	...	...	...	4·06	0·60	10	13·03	8·77	10·64	4·06	27·26	30·99	Muzaffarpur.			
...	...	...	0·25	2·45	0·06	0·25	...	...	...	3·54	13	14·17	10·82	10·77	3 54	24·90	31·44	Hajipur.			
...	...	...	0·55	0·28	0·06	...	...	...	0·50	0·50	13	11·94	6·38	13·50	2·30	21·05	33·59	Paru.			
...	...	2·17	0·35	0·21	0·07	0·02	...	...	0·80	3·02	13	13·07	10·20	11·98	2·17	26·56	33·67	Mahua.			
...	...	3·80	0·20	...	0·30	...	...	...	2·40	...	10	10·47	10·35	10·15	2·60	23 96	29·26	Shuhar.			
...	...	0·77	...	...	...	...	...	...	0·90	...	11	13·38	13·53	11·38	2·40	35·32	32·53	Pupri.			
...	...	1·02	0·09	1·30	0·22	0·17	...	...	2·05	2·76	14	13·87	15·90	11·04	2·76	37·36	33·46	Tajpur (Samastipur).	Darbhanga.		
0·14	...	1·87	...	0·09	0·16	0·24	...	0·03	0·25	1·08	14	14·07	8·09	12·24	2·58	30·62	33·39	Darbhanga.			
0·14	...	...	...	...	0·05	...	...	...	0·08	0·22	13	14·17	8·13	11·79	1·96	26·23	34 03	Madhubani.			
...	...	2·76	...	...	0·43	...	...	...	0·30	...	11	14·06	12·14	14·10	2·76	33·96	36·56	Bahera			
...	...	0·65	...	0·45	0·70	0·18	...	...	...	...	11	13·53	6·71	13·38	2·25	25·60	33·53	Rosera.			
...	...	6·90	0·03	0·75	0·27	0·95	...	...	...	0·03	13	13·42	8·01	10·80	1·96	21·99	30·96	Begusarai ...	Monghyr ...		
...	...	...	0·41	...	0·08	0·52	...	...	...	...	11	14·23	6·79	11·03	2 03	23 54	32·02	Monghyr.			
...	...	...	1·05	0·26	...	...	0·06	...	...	...	11	14·35	11·65	11·65	4·80	25·94	34·06	Jamui.			
1·15	...	...	...	0·13	1·45	0·12	...	...	...	...	8	11·13	5·28	13.37	1·45	28·23	37·42	Gogri.			
...	...	...	0·16	0·49	...	0·82	...	...	0·63	...	11	14·67	7·23	13 86	1·63	27·64	35·35	Jamalpur.			
...	...	...	...	...	...	...	...	...	0·95	1·02	8	9·56	4·93	11·37	1·30	12·36	31·64	Shaikhoura.			
0·05	...	...	0·59	0·17	0·11	0·02	...	...	0·01	0·05	9	14·78	4·37	9·55	0·79	22·48	37·32	Chakai Bamda			
...	...	...	...	0·40	...	0·20	...	...	...	...	7	11·58	5·41	11·77	2·12	20·50	30·62	Chupreon.			
...	...	...	0·55	0·30	0·15	0·12	...	...	...	0·35	12	15·14	8·21	10·30	2·67	33·13	39·71	Gidhour.			
...	...	...	1·43	0·10	0·16	0·14	...	...	...	...	10	16·50	6·76	11·82	1·46	20·79	38·41	Khargpur.			
0·22	...	...	...	...	...	0·26	...	...	0·22	...	14	14·06	7·56	11·91	2·17	23 72	35·52	Madhipura ...	Bhagalpur.	Bhagalpur.	
0·31												9·50		13·46			33·02	Bangaon (Sylabad).			
0·18	...	0·01	...	...	0·32	0·35	0·07	...	...	0·06	16	14·13	9·87	12·27	2·25	27·37	35·56	Sapaul.			
0·24	...	0·03	...	0·07	0·19	0·32	0·02	...	...	...	18	12·88	15·51	11·83	5·86	34·52	40·96	Pratapganj.			
0·06	...	...	0·06	0·21	1·20	0·75	...	...	...	0·01	10	13·32	6·83	11·26	1·50	24·72	33·47	Bhagalpur.			
...	...	...	...	0·05	...	0·63	...	...	...	0·10	7	13·87	4·93	10·95	1·75	19·01	32·78	Banka.			
...	...	...	...	0·58	...	...	...	...	...	...	7	13·81	5·64	10·74	1·65	20·41	34·42	Colgong.			
...	...	...	0·55	0·12	0·15	...	...	...	0·20	0·20	14	14·67	7·81	10·88	1·67	23·44	31·93	Bansil.			
0·05	...	...	...	...	...	0·10	...	...	...	...	15	16·70	15·53	15·80	3·03	63·83	54·14	Kishanganj .	Purnea.		
0·07	...	...	...	...	...	0·25	...	...	0·31	...	15	15·45	16·37	14·16	4·16	45·01	48·72	Araria.			
0·01	...	...	...	...	0·24	1·00	0·35	...	...	...	19	16·57	10·80	13·08	3·36	50·83	48·40	Purnea.			
...	...	...	...	0·15	0·63	0·13	...	...	...	...	13	13·21	7·00	11·27	3·13	20·88	38·57	Gondwara (*Korah*).			
...	...	...	0·10	0·50	0·20	...	...	...	...	...	12	13·38	11·20	17·19	3·40	46·25	45·44	Barsoe.			
0·65	0·20	...	...	...	...	...	...	...	...	...	15	14·44	17·77	13·69	6·10	40·05	47·04	Forbesganj.			
...	0·30	...	0·40	...	0·43	...	...	...	...	...	16	17·50	13·89	18·78	4·30	50·71	60·18	Kaliganj.			
0·10	...	...	...	0·22	0·53	0·10	...	...	...	...	14	14·48	8·48	10·27	2·15	30·65	33·03	Malda ...	Malda.		
...	...	...	...	...	0·70	0·22	...	...	...	...	11	14·96	11·47	11·58	2·52	38·55	41·01	Chanchal.			
...	...	...	...	0·63	0·15	0·15	...	...	...	...	13	14·44	7·91	12·27	2·01	37·47	38·98	Gajol.			
...	...	...	0·72	0·12	0·75	0·02	...	...	...	...	10	14·83	5·84	10·10	1·00	28·76	34·64	Sibganj.			
0·14	...	...	...	0·78	1·32	0·12	...	...	...	0·37	14	14·03	7·88	10·01	1·70	43·93	34·69	Rajmahal	Santhal Parganas.		
...	...	...	0·09	0·07	0·04	0·67	...	...	...	0·01	7	14 68	4·22	10·65	1·75	27·30	33·61	Godda.			
...	0·33	...	0·57	0·03	0·43	0·04	...	...	...	0·05	12	15·32	11·10	11·04	3·26	36·35	38·69	Pakaur.			
0·26	...	...	0 57	0·06	0·12	0·05	...	...	0·21	0·17	13	16·23	9·46	13·41	3·05	32 34	39·67	Nava Dumka.			
0·12	...	...	0·15	0·25	..	0·58	...	...	...	...	9	16·00	3·38	12·09	1·19	29·83	36·19	Deoghur.			
...	...	...	0·33	0·40	0·90	0·13	...	...	...	0·33	13	17·78	8·99	12·69	1·83	37·41	37 92	Jamtara.			
...	...	...	...	1·08	0 55	...	...	...	...	0·80	12	?	8·33	?	1·65	24·38	?	*Mohagama.*			
...	...	...	0·56	...	0·24	0·16	...	...	...	0·08	8	11·31	4·13	9·49	1·02	34·96	30·33	Nanihat.			

Table of Rainfall recorded at stations

Meteorological Division.	Division.	District	Station.	1	2	3	4	5	6	7	8	9	10	11	12	13	14	15	16	17	18	19	20
BIHAR—*concld.*	Bhagalpur—*concld.*	Sonthal Parganas—*concld.*	Assenboni	1·94	0·15	0 21	0 98	.	.	..		0·71	2·78	0·31	0 55	0·40		0 06			0 26	1·24	0·02
			Katikund	0 30	0 24	0·10	0 30	0 32	0·05	..	.	1·70	0 29	1·35	0 05	0 51	0 94	..	...	0·80	0 02	0 03	[illegible]
			Madhupur ...	0 60	...	0 50	..	0 50	..		..	.	0 40	1 30	0 40	...	...	...	.	0·50	...	0 40	[illegible]
			Sarwan .	1 80	..	.	...	0 23	...		..		0 40	2 15	0·46	...		...	.	0 36	..	0 4	
			Sarath ...	0 80	.	0 27	..	1·30	...					2·10	...	...	0 08	...	...		1·26	0·50	
			Barkope .	0 29	...		...		.	0·35	0·31	0·28				...	...	...	..			..	
			Bhagya ...	0·30	...	0·34				.				1·36	0·16			...					
			Mohespore	0 95	.	0 17	...	0 15	0 52	..		0·16	2 35	2 17	0 22	1·20	0 35	...	0 12	.	...	0·32	0·11
			Hiranpur ...		0·09		..	...		.	1·00	1 17	1 15	0·05	..	0 15		...	1 82			0·80	...
			Barharwa ...		0·61	0·29			...	...	..	0 11	1 91	0 51		0 70	0 41	...	...	..	.	0·10	.
			Sahibganj ...	2 10		0 60	0 10	1 23		..		0 20	0 90	1 20	0·37	0 09	...	0·11	.			0 09	0 06
			Bario ...	1·35	0 56	. .	0 15	...	0 11	.	1·12	..	1 67	0 40	...	.	...		..	0 77	. .	...	...
ORISSA.	Orissa.	Cuttack ..	Jagatsingpur	..	...	2·08	.	.	...		0 35	.		...	1·50	..	.	. .	0·74	0 79	0·23	0 45	0 73
			Banki ..		...	0·20	2 62		...	..	0·21	...	0 30		0 09	.	0 44		0 60	..	..	0·24	0 60
			Cuttack ..		...	0 19	2·07	0·02		...	0 02		0 50	0 59	0 83	. .	0 02	1·33	0·75		.	0 10	0·71
			False Point ..	1·07	..	0 41	1 95	0·00	1·54	0 03	0 20	0 17	.	1 54	0 18	0 53	...		..	0·09		0 09	0 31
			Kendrapara ..	...	...	0 27	2 09	0 08			0 17		0·38	0·46	1 40	0·01	.	0 15		0 43	0 64	0 59	[illegible]
			Jajpur ..	...		0 14	0 97	0 01		0 80	0 09	2·25	0 08	0 64	0 29	0 01	..	0·06	0 10	0 27	...	0 13	0 98
			Dharmsala ..	...	0·03	0·62	0 16	...	1 23		0 62		..	0 25		...	0 76	0 25			..	0·22	
			Salepur ..	...	...	0·20	1 52	...	...	...	.	0 03	...	0 18	0 76	0 08		0·18	0 72	0 81	...	0 30	0·38
		Balasore ...	Akhyapada ..	.	0·05	0 77	0 81	..	...	1·69	0·27	0 43	.	0·29	0 09	0 06	...		0 05	0·18	0 37	0 15	0 70
			Onandbali	0·02	0·08	1 03	0·74	..	'	.	..		..	0 74	1 12	1 62			..		0 22	0 03	1 05
			Bhadrak ..	...	0 05	. .	0 26	..	.	0 30	0 21	0·52	0 16	0·22		.	0 42	.		...	0 18	0 01	0 38
			Soro ..	0 36	1 93	0 06	0 45	..		..	0 44	0 22	0·20	3·28	..			..		0 11	0 51	1 12	0·52
			Balasore ...	. .	.		2 70	...	0 15			0 20	0 15	0 05		0 54	.		.	0 24	0 32	0 90	1 35
			Jellasore ..	..	0·07	0·65	1·08	1 62	..	0 11	1 35	0 91	..	0·12	1 08	1·17	0 08			0 21		0 59	1·15
			Baripada ..	..	...	0·02	1 42	..	...	0 02	[illegible]	0·04	...	1 90	0·65	...	...	...	0·81	...		1 57	0 88
		Angul ...	Angul ...	...	...	2 34	0·17		...	0·05	0 46	0 48		...	0·40	0 96				0 22	...		0 85
			Bissipara ..	0 04	..	0 37	1 62	2·69	0 91	.	0 20	0·42	0 02	0·14	0 11	0 02	0 11	0·01	0 02	1·76	0 07	1 06	0 90
			Pal Lahara ..	0 05	...	0 93	1 32	0·08	1 36	3 67	2·24	0 06	0 04	0·38	0 65	..	0 04		0 07	0 12	0 56	1 38	0 42
			Talchar ...	.	.	0·24	0·15		0·05		1 45	0·74	0 11	...	0 05			.		0·70	.	0 07	0 36
			Dhenkanal ...	0 76	0·10	0 60	0·11	0·15	0 11		...	0·25	...	0 83	0·39		...	0 37	0 52			0·45	
			Bassinga ..	0 01	..	0 15	1 65	0·09	0·07	0·03	1·30	0 18	0·32	0 34	0·02	...	0·18	...	0·91	0 24	0 26	..	1·29
			Baramba ..	0 46	0 32	0 80	1 40	0·30	...	0 19	0 31	...		0 09	0 23	.	.		0 02			0·20	0 49
			Narsinapur ...	...	0 23	0·60		0 36		0 28	0·27	0 12	0·10	...	.	.			0·20	0 54	0 30	0 63	
			Chhindipada	...		1 00	0 20	1 00	.	..	0·45	.	...		1·21	0·70				0 45	.	0·36	0·45
			Tikerpara ..	...	0·65	0 74	0 14			0 42	0·31	0 24	0·06	0 15	0 04	0 06	0·07	0·47	0 31	0 65	0 32	0 24	0 46
			Kumarkhole	. .	0 50	1·80	1·65		0 04	0·04		0·27	0·27	..	0 18	0·07		...	0 65	0·07	0 32	1 5	0·13
		Puri ...	Puri ..	...	...	.	0 36	0 47	1·12		0·29	0·03	1 04	1·30	0 50		1·70	0 05	0·35	0 17	0 04	0 55	0 15
			Khurda ..	0 12	1·35	0 40	2·55	0 09	..		2·24			0·21	0·96	0 30	0 19	..	2 02		.	0 56	0 55
			Bhanpur ..	0·40	0·02	[illegible]	2·50	0 02		0 63		...	0 12	0 65	0 80	0 82	0·08	0 64	0 01	0 02	0 50	0·23	0 75
			Gop ...	...	..	...	[illegible]	0 16	0 24	.	0 22	1·44	0 06	0·63	0 32	0 23	1 84	0 84	0·89	0 68	.	0 30	0 25
			Satpara ...	...	...		0 49	0 04		0·46	0 32	0 69	0·24	0 26		0 25	0·04	2 16	0·45	0 40		1·00	0 29
			Pipli .			3 02	2 75	0 10		1 31	0·21	.	0·11	0 55	0·38	0 16	...	0 93	0·23		1·41	0 65	0 70
			Nayagarh ...	0·19	0·72	2 60	0 65		0 18	0·72	..	0·30	0 80	0·25	...		...	0·56		..		0·82	
			Ranpur ...	0 67	0 20	0 18	0·80	0·10	0 10	0 75	0 40	0·08	0 07	.	0·10	0·25		0·10	0 13	0·32	0·18	0 05	0·37
			Kanas ..	...	...	2·07	1·96	.	.	0 45	...	...	0 10	2·05	0 92	...		1·25	1 00	...	.	1·24	0 55
CHOTA NAGPUR.	Chota Nagpur.	Hazaribagh ..	Pachamba (*Giridih*).	0 18	...	0 23	...	0 50	0 60		...	...	0·67	2·58	0·43	...	..	...		0·11	...	..	0 50
			Hazaribagh ..	0·65	0·69		0 51	1 42	0 73	.	0 12		0·23	0 32	..		..	...	...	...	..		0 44
			Barhi ...	1·43		0·73		0 15	0 54	0·13	0·19	.	0·26	0·76	...	0 15	..	...		..	.	1·21	0 13
			Chatra ..	0 20	0·14		1 47	0 06	0 57	0 13			0·20	0·15	..	...	...	...		...	...	0·95	0 05
			Kharagdiha ...	0·25	...	1·75		0 53	..		..	0·75	0·80		..	..	..	...			...	.	0 37
			Ramgar ..	0 60	0·40	..	2 10			1·10	0·69	..	0 40	0·60		...	.	.	...		.	..	..
		Ranchi ..	Lohardaga ..	0·32	0 61	..	...		0 90	2 26			0 66				...					0·60	0 10
			Ranchi ..	...	0·18	0·17	0·15	2 04	0 63	0 75	0·31	0·87	0·13	1·95		0 01	...	..	.	...	0 12	0·77	0 08
			Silli ...	...	...	..		1 50	..	...						...	..	...	...	. .	...	2 30	
			Palkot ..	..	0 35	0·34	0 59	1·07	2 04	0·29	1·25	2 18	1·09	2·50	0·04		...				.	0 52	0 09
			Bano ..	0·25		...	1·25	..	0·72	0 34	...	1 00	0 41	1·00	0·30	.				1·37	...	0·30	0 60
			Tamar ...	...	1 36	0·25	0·27	1·50	0 50	0 06	.	..		0·40		...	0·09				..		
			Kurdeg ...							1 30	0·46	0·90	0·66	0 10	0 38	...	0·26	...	..	..	0·55	0·69	0·55
			Chainpur ...	...	...	0 58	0·40	0·75	0 54	0·10	0 90	...	0 40		...	...	...	...	...	...	0 35	0 20	0 28
			Sirguja ...																				
			Jashpur ...	...		...	...	2·25	0·12	0 25	0·72		0 43	0·77	0·12	...		...		...	3·23	0·71	0·76
			Gangpur ...	...	0·05	1·95	0·17	0 16	0 14	1 50	1·70	1·80	1·12	0·32	0 45	0·23	0·19	...	0·27	..	0·13	[illegible]	0·22
		Palamau ...	Palamau (*Daltonganj*).	...	...	0 03	...	0·28	0 15	0·01	0·41	...	1 10	0·22	...	...	..	..		..	...	1·51	0·10
			Balumath ..	..	...	...		0·65	0 50	1·95	...	1·30	0·35	1·02	..	...	..	.	..	...	0·30	...	...
			Husainabad	...	...	.	.	0 88	1·00	..	.	...	..	...	...	.	...	...	..	...	...	..	...
			Garhwa ..	..	...	0 11	0 21		0 10	..	0 42		0·64	...	...	...	...	...	..	...	...	.	0·25
			Mahuadaur ...	..	...	0 16	0 10	1·19	..	.	1 66	0 20	0 75	0·40	...	...	...	...	...	...	...	0·28	0 31
			Panki .	0·40	...	...	.	0 10	...	..	...	1·20		.	.	...	...	...		.	...	...	1 10
			Latehar ...	0 14	...	.	..	0·50	0·15	0·15	..	0 02	1·10	0·68	...	...	. .	...	.	...	...	1·17	0·35
			Nagarutari ...	...	...	0·45	...	0·08	..	0·17	0·02		0·65		...	...	...		.	..	...	0·13	0 32
			Ranka ...	...	...	1·50	...	0·20	0 50	1·87	..	0·50	2 87	0·10	. .	...	..	...	.	..	.	0·04	0 02
			Chattarpur ..	...	...		.	1·35	1·98	0 45	0·40	0 56	0 82	0·04	...	...	..	...	...	...	...	0 46	...
		Manbhum ...	Purulia ...	...	1·33	0·52	0·42	0·02	0·78	...	..	0·60	0 26	0·79	0·03	...	0·72	...	...	...	...	1·32	1 06
			Gobindpur ..	..	0·08	0 18	0·04	0 30	0 18	...	...	0·09	0·42	1·54	0·07	0·10			0·86	...	...	...	1·64
			Raghunathpur	...	...	1 50	0·20	2·41	0 50	...	...		1·86	0·56		...	0·34	0·11	0 12				0 84
			Barahabhum	...	..	0 15	0 40	0 30	0·30	...	...	0·55	0·10	0·78	0·04	...	...	...		...	...	0·30	0·30
			Jhalda ..	.	.	0·35	0 47	0 07	0 53	0·26	0·52	0·15	0 26	0·52	1·25	...	..	...	...	...	...	0·02	0 75
			Chas ...	0·10	0·20	0·20	0·87		..	0·05	...	0 30	0·65	1 45	0·50	...	...		...	...	...	0·45	0 20
			Pandra ..	...	0·03	0·24	0·14	0 88	1·80	.	...	...	1·33	1·45	0·12	0·72	0·12	...	0·11	...	0·05	...	0·45
		Singhbhum ...	Chaibassa ..		...	0·33	0·17	0·59	0·05	...	0 05	0·02		1·18	0·28	..	...	...		...	..	0 25	0·68
			Chakradharpur	0 40	0 08		...	1 36	...	0 39	..		1·23		0 50	0·17		.	.	...	0·53	0·98	
			Ghatsila	0 13	0 27	0·63	0·69				...	0·31		0·60	0·90	...		..	...	...	0·19	0·27	0·50
			Baharagura ...	...	...	0 17	0·40	0 43	0 08		...	1·05	0·24	0 27	0 17	...		..	...	...		2·03	0 48
			Gailkura ...					Not recorded.															
			Kalikapur ..	...	.	0 30	..					0 59	0 56	..	..	...	...	...		0·16	...		
			Monaharpur ..	..	0·10	..	0·50	...		0·78	0 12	1 10	...	0 15	...	...	...	...			...	0 27	0 10
			Katbari ...	0·45	0·75	..	0 90	...	0·10	.	...		.	0·77	...	...	0·31	.		0 39	...	0 09	
			Seraikilla ...	...	...	0 14	0 68	0 06	.		0 03	0 13	0·06	0 62	0 15	0 21	0·26				..	0 09	0·06
			Kharswan ...	...	...	0·55	0 05	1 40	...	0 22	0 17		...	0 58	0·14	1 36	0·37	0 07			...	0·30	0 15
		Orissa Tributary Mahals	Keonjhar ...			0 18	0·20	0·07	...	0 36	0 06	...	0 70	0 43	0·27	0·24	..		0 17	0 07	2 83	0·27	..
			Anandpur ..	2 55	0·19	1 56	1 50	0 68	0·18	...	0·14	.	0·35		0·06	0 59	0 04		0 06	0 56	0·30	0 30	0 75
			Kunjabongarh	0·10	0·08	0·07	0·98	0 83	1 77	...	1 52	0 33	0·02	0·40	0 71	1·01	..		0 26	0 02	0 55	0 07	0·77

in Bengal in August 1902—*concluded.*

21	22	23	24	25	26	27	28	29	30	31	Number of rainy days.	Average number of rainy days.	Total rainfall for the month.	Average rainfall for the month.	Heaviest rainfall during the month.	Total rainfall from 16th May up to 31st Aug. 1902.	Average rainfall from 16th May up to 31st Aug.	Station.	District.	Division.	Meteorological Division.
0·10	0·06	.	1·08	0·07	0·11	...	...	...	0·83	0·11	17	17·33	11·47	14·56	2·78	38·08	37·95	Assenboni.	Sonthal Parganas—*concld.*	Bhagalpur—*concld.*	BIHAR—*concld.*
0·43	...	...	0·30	0·11	0·95	0·27	...	...	...	0·25	18	15·29	10·59	13·30	1·65	37·25	42·43	Katikund.			
0·10	...	...	0·60	0·40	0·30	0·20	0·20	...	...	...	14	18·43	6·40	12·57	1·30	36·41	37·10	Madhupur.			
0·17	0·24	...	...	0·48	0·08	0·72	0·73	...	...	0·38	14	16·14	8·88	10·30	2·15	37·98	34·80	Sarwan.			
...	...	...	0·31	0·35	1·39	0·09	...	...	...	...	9	10·29	8·63	11·89	2·10	31·64	34·89	Sarath.			
..	...	...	...	0·54	1·28	...	0·25	...	0·17	...	8	17·53	3·47	11·47	1·28	28·74	32·23	Barkopa.			
..	...	...	...	0·18	0·17	...	...	...	...	...	8	10·14	3·21	9·70	1·88	22·33	29·25	Banaya.			
0·08	...	...	0·53	...	0·61	...	...	...	...	0·17	16	16·00	10·18	12·29	2·36	37·00	38·42	Mohespur.			
...	...	0·23	...	0·09	1·50	...	...	...	...	...	8	?	8·05	?	1·82	21·80	?	*Hiranpur.*			
0·23	...	...	0·59	0·24	0·95	...	...	...	...	...	12	16·57	6·95	10·76	1·91	34·74	34·95	Barharwa.			
0·27	...	...	0·08	1·98	1·14	0·53	...	...	...	...	15	13·86	10·15	11·38	2·10	34·53	36·55	Sahibganj.			
..	...	...	0·92	0·45	0·22	...	...	...	...	...	11	?	7·73	?	1·67	28·41	?	*Borio.*			
...	...	0·90	...	...	...	0·20	...	0·85	0·80	0·65	13	14·88	10·27	12·48	2·08	41·98	34·46	Jagatsingpur	Cuttack.	Orissa.	
...	...	...	0·73	2·95	...	...	...	...	0·33	0·40	11	15·43	9·89	11·55	2·95	44·93	33·90	Banki.			
0·87	...	...	0·45	4·32	...	...	0·71	0·04	1·15	0·13	15	18·19	14·79	12·43	4·32	49·19	35·22	Cuttack.			
0·31	0·17	...	1·40	3·25	0·24	...	..	..	0·13	1·24	17	16·16	15·04	13·91	3·25	34·28	40·00	False Point.			
0·23	...	0·01	0·63	5·45	...	0·54	...	0·11	0·03	0·82	17	15·50	15·01	13·17	5·45	40·17	37·51	Kendrapara			
0·58	0·02	...	0·49	4·84	...	...	...	...	...	0·12	14	15·45	12·82	12·32	4·84	40·57	38·42	Jajpur.			
0·12	...	0·17	4·27	...	...	0·25	...	0·25	0·05	1·58	14	14·88	10·83	12·85	4·27	37·48	38·39	Dharmsala.			
0·80	...	...	0·52	2·92	...	0·03	...	...	0·28	0·60	14	16·20	10·45	13·76	2·92	34·84	37·71	Salopur.			
0·11	...	...	0·20	3·50	...	...	0·27	0·37	0·22	0·30	17	15·36	10·59	12·92	3·50	29·36	36·63	Akhyapada ...	Balasore.		
0·01	...	...	1·10	1·42	...	0·05	0·07	...	...	1·18	10	14·29	10·40	11·97	1·63	33·17	35·60	Chandbali.			
0·26	...	0·30	0·27	1·20	...	...	0·16	...	...	0·04	15	14·61	5·53	11·68	1·20	32·68	36·08	Bhadrak.			
0·28	...	...	0·56	0·43	...	...	...	...	...	0·35	15	15·11	10·83	10·68	3·26	36·90	34·13	Soro.			
0·15	.	0·48	0·52	0·58	...	...	0·05	...	...	1·40	14	10·03	9·75	12·27	2·70	33·41	37·60	Balasore.			
0·28	...	...	1·26	0·56	...	...	...	...	...	0·66	15	14·36	12·17	11·44	1·63	39·55	36·10	Jellasore.			
0·05	...	...	0·89	0·60	...	...	0·12	...	...	...	9	16·36	6·63	12·04	1·90	37·40	38·46	Haripada.			
...	...	...	0·48	1·15	...	0·25	...	...	...	0·27	12	14·21	8·08	10·01	2·34	29·69	33·53	Angul ...	Angul.		
0·83	0·01	...	0·50	1·90	0·10	0·04	2·00	0·32	0·88	0·19	20	16·42	16·54	10·89	2·69	31·56	35·17	Biasipara.			
0·07	...	...	0·84	1·32	0·58	...	0·17	0·05	0·12	0·40	17	18·45	16·72	16·88	3·67	54·13	52·16	Pal Lahara.			
...	...	...	0·96	2·08	—	0·09	...	0·14	...	2·30	11	14·52	9·58	11·29	2·39	38·85	35·92	Talchar.			
...	...	0·53	5·10	...	...	0·60	...	0·84	0·60	0·57	18	16·32	13·18	11·97	5·10	47·05	37·85	Dhenkanal.			
...	...	...	0·57	4·37	...	0·03	0·14	0·50	0·49	0·38	17	?	13·93	?	4·37	46·04	?	*Rasinga.*			
...	...	0·15	0·30	2·57	...	1·58	...	...	0·22	0·46	17	16·76	10·69	11·84	2·57	36·09	33·97	Baramba.			
...	...	0·27	2·70	...	0·28	0·60	...	1·18	0·40	0·42	18	15·33	9·61	9·76	2·70	23·56	29·67	Narsingpur.			
0·50	0·12	...	0·45	1·10	...	0·27	...	0·15	0·50	0·72	17	?	9·61	?	1·30	36·17	?	*Chhendipadah.*			
...	0·21	0·52	2·84	0·60	0·56	1·04	...	...	0·12	0·20	20	?	10·99	?	2·84	27·30	?	*Tikerpara.*			
...	...	...	0·71	3·61	0·07	0·88	0·09	0·02	...	1·00	13	?	13·48	?	3·61	32·56	?	*Kumarkhole.*			
0·56	...	...	2·05	2·37	...	...	...	0·40	1·26	1·32	18	12·85	17·28	12·13	2·37	40·79	32·07	Puri ...	Puri.		
0·20	...	...	1·86	2·62	...	...	1·02	0·20	...	1·00	18	16·65	19·02	13·00	2·62	54·06	37·28	Khurda.			
0·02	0·03	0·18	0·85	1·18	...	...	...	0·32	0·23	0·19	17	15·55	11·21	11·69	2·50	32·70	31·15	Bhanpur.			
0·29	...	0·06	2·20	5·56	...	...	...	0·40	0·79	1·40	19	14·87	21·83	12·63	5·56	47·04	33·67	Gop.			
0·03	...	...	2·05	1·30	...	...	...	0·36	2·25	0·26	17	11·79	18·32	8·81	2·25	32·91	25·11	Satpara.			
0·15	...	0·31	0·77	3·90	...	...	0·29	...	0·76	0·97	21	16·18	18·66	14·48	3·90	45·65	36·96	Pipli.			
...	...	...	2·75	...	0·45	...	0·24	...	0·45	0·36	16	12·80	11·04	13·40	2·75	23·18	37·57	Nayagarh.			
...	...	...	1·19	...	...	...	...	1·38	0·18	1·35	19	16·88	8·93	13·23	1·38	36·83	35·42	Ranpur.			
...	...	...	1·10	4·10	...	...	...	...	1·00	2·10	14	?	16·58	?	4·10	45·98	?	*Kanas.*			
0·06	...	...	0·74	0·11	1·10	0·32	0·08	...	0·80	...	14	17·35	9·21	12·11	2·58	36·25	35·45	Pachamba (*Giridih*).	Hazaribagh.	Chota Nagpur.	CHOTA NAGPUR.
0·21	...	...	0·06	0·57	0·32	0·05	0·10	...	...	0·30	14	17·77	6·71	12·62	1·42	25·33	36·31	Hazaribagh.			
...	...	...	0·07	0·28	0·17	...	0·98	0·16	...	0·41	16	16·31	6·95	11·98	1·45	26·16	33·63	Barhi.			
...	...	...	...	0·15	0·26	0·07	...	0·16	...	...	11	16·25	4·86	11·75	1·47	19·76	37·88	Chatra.			
...	...	0·15	...	0·15	...	...	0·75	...	0·60	...	10	15·09	6·08	13·31	1·75	22·51	38·54	Kharagdiha.			
...	...	1·50	0·80	1·10	...	...	...	...	0·20	...	11	16·67	9·30	13·69	2·10	24·15	37·78	Ramgar.			
0·07	...	0·02	...	1·25	0·14	...	...	..	..	0·42	10	18·00	7·35	13·31	2·26	28·05	35·41	Lohardaga .	Ranchi.		
0·25	0·09	...	0·10	1·58	0·65	0·37	0·30	0·01	...	0·02	18	17·84	11·68	11·97	2·04	30·90	34·94	Ranchi.			
...	...	0·10	0·90	...	...	0·10	0·75	...	...	...	6	14·64	6·15	13·25	2·80	30·40	35·90	Silli.			
1·07	...	...	0·25	1·64	...	...	...	...	1·32	0·06	15	16·30	17·19	17·59	2·50	41·25	46·66	Palkot.			
0·10	0·55	1·50	1·90	0·70	...	...	...	0·30	0·10	0·50	19	?	12·29	?	1·50	56·85	?	*Basio.*			
...	...	0·31	0·24	0·72	0·21	...	...	0·04	0·06	0·18	11	19·57	6·10	12·62	1·50	23·11	30·34	Tamar.			
...	...	1·40	1·20	0·65	0·46	0·43	...	0·29	...	0·20		?		?			?	*Kurdeg.*			
0·75	0·54	0·95	1·10	0·75	0·50	0·45	...	0·10	...	1·25	19	15·14	10·87	11·10	1·25	27·97	34·83	Chainpur.			
												18·59		21·02			30·55	Sirguja.			
0·47	0·22	0·51	0·76	1·26	0·85	0·84	...	0·85	0·08	0·30	19	20·21	15·50	16·62	3·28	44·06	45·07	Jashpur.			
...	...	1·57	2·54	2·13	0·31	...	0·52	...	...	1·42	22	18·37	19·21	16·63	2·54	42·77	44·94	Gangpur.			
...	...	0·01	0·08	0·65	0·35	0·08	0·01	...	0·01	0·23	10	15·74	4·98	12·11	1·51	15·37	31·53	Palamau (*Daltonganj*)	Palamau.		
0·40	...	...	0·50	0·55	...	...	0·06	0·25	...	...	11	16·13	7·82	14·51	1·95	25·76	37·90	Balumath.			
...	...	1·17	0·69	0·25	...	...	...	0·59	0·50	0·14	8	12·38	5·07	12·49	1·17	21·95	36·14	Hussainabad.			
...	0·25	...	0·15	0·56	0·13	...	...	0·17	0·67	0·37	18	15·40	3·93	14·58	0·67	16·52	33·76	Garhwa.			
0·11	0·23	0·06	0·07	0·90	0·09	...	0·20	0·16	...	0·35	15	?	7·19	?	1·06	22·06	?	*Mahuadanr.*			
...	...	...	...	0·72	...	...	...	0·08	...	0·15	6	?	3·75	?	1·20	25·20	?	*Panki.*			
...	...	0·05	0·50	1·75	0·12	...	0·95	...	...	...	11	?	6·78	?	1·75	30·44	?	*Latehar.*			
0·35	0·60	...	0·14	0·28	0·56	0·34	1·50	...	0·04	...	12	?	5·58	?	1·50	21·10	?	*Nagaruntari.*			
0·12	0·40	...	...	0·80	0·28	0·31	0·11	0·18	...	0·03	14	?	9·77	?	2·87	31·22	?	*Ranka.*			
...	...	...	0·17	0·30	...	...	...	...	0·42	1·25	11	?	5·20	?	1·96	26·56	?	*Chattarpur.*			
0·81	0·04	...	0·80	0·73	0·22	0·33	0·15	...	...	0·38	18	16·52	10·51	12·30	1·33	27·90	36·58	Purulia ..	Manbhum.		
0·07	...	...	0·45	0·33	0·45	0·15	0·10	...	...	0·14	14	16·87	6·45	11·76	1·50	21·54	36·87	Gobindpur.			
0·16	..	0·40	0·93	0·55	0·49	0·12	...	...	...	...	16	14·86	11·19	12·78	2·41	30·29	35·47	Raghunathpur.			
...	...	0·36	2·65	2·50	0·38	...	...	...	...	0·10	14	15·75	10·41	11·73	2·65	33·85	37·43	Barabhum.			
...	...	0·02	...	0·50	1·00	0·15	1·46	...	0·02	0·30	15	16·75	8·42	15·00	1·46	25·30	39·45	Jhalda.			
...	...	...	0·80	0·40	...	...	...	...	1·54	0·40	14	16·69	8·11	12·46	1·54	21·23	34·58	Chas.			
0·16	...	...	0·55	0·30	...	0·46	0·25	...	...	0·08	16	16·44	9·29	11·86	1·60	33·62	36·90	Pandra.			
0·32	0·06	0·15	0·46	1·35	0·02	0·12	0·74	...	...	...	18	16·94	6·78	13·23	1·18	33·32	37·26	Chaibassa	Singhbhum.		
...	0·06	0·79	1·02	0·79	0·12	0·25	...	0·08	...	0·51	14	18·20	9·33	12·28	1·38	37·55	37·11	Chakradharpur.			
...	...	...	0·99	0·32	0·24	0·06	...	...	...	0·08	13	15·73	6·18	14·71	0·99	20·31	40·79	Ghatsila.			
0·03	0·02	...	0·40	0·35	...	...	...	...	...	...	12	14·33	7·01	11·35	2·03	27·43	36·27	Baharagura.			
				Not	recorded.							19·00		16·68			44·54	Gailkura.			
...	...	...	3·10	0·16	...	...	...	...	0·10	...	7	16·00	5·03	13·60	3·10	30·30	46·10	Kalikapur.			
0·62	0·15	...	0·20	3·35	..	0·10	0·85	0·12	0·40	0·72	17	18·85	6·73	19·88	3·35	52·63	54·08	Manoharpur.			
0·63	0·04	...	1·07	0·35	0·00	...	...	...	0·30	...	11	?	5·61	?	1·07	31·17	?	*Kalbari.*			
0·44	0·10	0·10	0·67	0·64	0·15	...	1·40	...	..	0·41	15	?	6·28	?	1·40	32·43	?	*Seraikela.*			
0·44	...	0·90	0·94	1·17	0·11	0·30	0·61	...	...	...	17	?	9·60	?	1·40	26·21	?	*Kharsawan.*			
...	0·50	1·37	1·16	...	...	0·50	...	...	0·80	2·07	16	13·78	12·14	7·70	2·83	36·96	26·15	Keonjhar ...	Orissa Tributary Mahals.		
0·66	...	...	0·17	1·55	...	1·80	...	0·12	1·04	0·66	20	13·75	15·71	10·78	2·55	37·73	35·59	Anandpur.			
0·01	...	...	...	2·00	...	0·08	2·97	...	...	1·14	15	14·74	15·70	9·67	2·97	33·59	31·80	Kunjabongarh.			

SUMMARY OF THE METEOROLOGICAL AND RAINFALL OBSERVATIONS TAKEN IN BENGAL, AND OF THE METEOROLOGICAL OBSERVATIONS TAKEN IN ASSAM, FOR THE MONTH OF AUGUST 1902.

WEATHER in Bengal during the greater part of August was generally such as occurs during the monsoon season with fairly well distributed, though not in all parts normal, rainfall. The exceptional conditions noticed in earlier reports still existed in the early half of the month, but soon after the middle a change of a marked kind occurred and was chiefly shown by the movement of three shallow depressions which passed north-westward from the Bay in rapid succession between the 19th and end of the month.

The principal disturbance in the first half of the month was an exact parallel to one which occurred at the end of June and beginning of July, and which led to the commencement of general south-west monsoon weather in the greater part of Bengal As on that occasion a fall of pressure began in Assam and North Bengal and extended southward over the Province, but chiefly westward along the Himalayan range. Rainfall began in the extreme east of Assam on the 9th, it extended to North Bengal on the 10th, and then came a general heavy fall over the whole of Bengal Proper on the 11th. This westerly and southerly extension of the rainfall area ceased suddenly, and the heavy falls on the 12th were confined to the hills and submontane districts.

The absence of any indication of disturbed weather over the Bay on the south of the Province during the days preceding the changes referred to, as well as the fact that not only pressure but also temperature began to fall in the north-east first and that the extension of those changes was southward and westward, show that the disturbance was of a kind which, though not rare in the present season, has been exceptional in previous years. Also the information obtained from the ground level observations is insufficient to account for the occurrence of the general heavy rainfall on the 11th.

The rainfall of those days forms a considerable portion of what was recorded in North Bengal during the month, as an important change began soon afterwards, a change which may not have been independent of the earlier occurrences, but which in the absence of information must be treated as separate and independent.

The first indication of the change was the formation of the shallow depression in the west or south-west of the Bay about the 15th. It remained shallow and ill-defined for several days, causing irregularly cyclonic winds on the coast of the Circars and Madras. The winds never attained to even moderate strength; and the chief feature was the fall of temperature, which, beginning in the extreme south-west of the Bay, moved north-westward into India. The central area of the depression on the 19th was near the north coast of the Circars, as shown by the northerly winds at Vizagapatam and Gopalpur. On the following day the depression having moved westward, weather was of ordinary monsoon character over the Bay and Province.

Usually when depressions are forming over the Bay, especially in August and September, and northerly winds prevail over the Province owing to the indraught towards the low pressure area, rainfall to a great extent ceases in Bengal. During the days between the 15th and 19th when the above disturbance affected weather in the west of the Bay, very little rain fell in the western districts, but showers, generally light, were of almost daily occurrence in East and North Bengal. After the depression passed inland on the 19th, general light or moderate rain fell over the greater part of the Province, but it soon ceased because of the approach from the east of another disturbance towards the north of the Bay.

This disturbance was first shown by a moderate fall of pressure in the south of Burma on the 21st. The fall was more rapid on the 22nd, and there was then a well marked depression over the area represented by Rangoon and Moulmein, with a very uniform distribution of pressure over the Province and the north of the Bay. The depression continued to move north-westward, the central area being south-east from Akyab on the 23rd and close to the Orissa Coast on the 24th. Some development had occurred during the two days the disturbance was over the Bay, and when the centre was in the north-west angle, there was a steep pressure gradient with strongish winds over the whole sea area. The highest wind velocity at Diamond Island was 20 miles an hour on the 23rd, and on the west coast 25 miles at Saugor Island and Gopalpur on the 24th.

On the 25th the depression was inland and over Chota Nagpur, and on the 26th it had moved westward beyond the boundary of the Province A few stations in Orissa and Chota Nagpur reported heavy rainfall during the passage of the disturbance, and after it had moved westward, general light rain fell in the northern districts for a day or two.

The recovery of pressure after the passage of the above depression over Bengal was not complete when the third depression of the latter part of the month began to appear, again in the south of Burma. A moderate fall of pressure was reported from Moulmein and Tavoy on the 26th, and on the 27th the wind circulation was slightly abormal on the Burma coast between Diamond Island and Akyab. But for several days the disturbance was very slight and was shown as a wide diffused depression over the north of the Bay with light irregularly cyclonic winds at coast stations. On the 31st it was better defined, the central area was near

the south coast of Orissa, and a steeper pressure gradient had developed over the south and centre of the Bay. The depression was still shallow, and the greatest defect was ·1 inch at False Point. On the 1st September the centre was still over the Bay, but it then moved rapidly westward, and on the 2nd was to the west of Orissa.

Though there was very little wind with the disturbance and no heavy rainfall, showery weather became general over the Province after the passage inland.

The month was divided naturally into two equal parts. During the first-half fine settled weather prevailed over the Bay and general rain fell inland until the disturbance occurred in the Himalayan region in the second week. The period of general rainfall in Bengal was practically brought to a close by the heavy burst on the 11th, any heavy falls on subsequent days being chiefly in the northern district. During the second-half of the month weather was more disturbed over the Bay, and rainfall inland was not only lighter than during the first-half, but lighter than is usual at the time of the year. This was due to the westerly movement of the depressions and to the monsoon current being diverted westward from the Bay. The rainfall in Bengal generally during the latter half of the month occurred for two or three days at a time, while the depressions were in the north-west of the Bay and for a short time subsequent to the passage inland. At other times comparatively rainless weather prevailed, more especially in the western and central districts.

Pressure underwent considerable oscillations at times, but as no deep depression occurred, the daily rise or fall was never more than moderately rapid. The more noticeable changes were on the 9th and 10th, when weather was disturbed in the Himalayan region, and on the 24th and 25th, when the second of the three depressions of the latter part of the month was passing from the north-west angle of the Bay across the south-western districts. The fall in front of the depression was about ·15 inch in 25 hours, and a rise of similar amount occurred during the recovery.

The difference from the normal on an average for the month varied from excess of ·02 inch in Bengal Proper to defect of similar amount in the south of Burma and the south of Madras.

Temperature.—As cloud was not so heavy as usual in August, temperature was almost continuously higher than usual, though not by large amounts. The only occasions when comparatively cool weather was fairly general were about the 11th and the 26th after the rainfall caused by the disturbances of these dates. There was a rather large excess in Bihar while the depressions were developing over the Bay in the latter half of the month, the greatest being 5° on the 16th. At other times excess was only 1° or 2°. Owing to the continued excess from day to day the average temperature for the month is above the normal by considerable amounts. In South-West Bengal, Bihar and Chota Nagpur excess is 1°·5, in East Bengal and Orissa about 1°, and in North Bengal rather less than 1°.

Excess in maximum temperature varied from 2° to 3° in the western districts to less than 1° in the east. In minimum readings it was smaller, and generally less than 1° in Bengal Proper. In the west of Bihar and Chota Nagpur it was about 1°·5 on an average for the month.

Rainfall on an average for the larger divisions was below the normal, except in North Bengal, where there was excess of 3·5 inches, and in Orissa, where there was a small excess of a quarter of an inch. The defect was large in Chota Nagpur, more than 5 inches, and moderate in Bihar, more than 3 inches.

The reasons for the heavy rainfall in North Bengal and Orissa have been given. In the former it was due to the disturbance in the Himalayan region about the 10th and 11th, and in the latter to the series of depressions which crossed the south-western districts during the second part of the month.

The area of largest defect is the north and east of Chota Nagpur. Over that area there was a uniform defect of about 6 inches. Excluding the Orissa coast districts and the sub-montane tract in the north of Bihar, where the rainfall was generally in excess, the whole of the western half of the Province received less than the usual amount, though not to any great extent, except in the part of Chota Nagpur referred to. In Bengal Proper the variation from the normal is irregular. Generally there is defect, except in the eastern half of North Bengal and in parts of East Bengal. The greatest excess is 17 inches at Baxa, and at a few stations in the extreme north-east it is between 8 and 10 inches. In Chittagong defect is generally between 8 and 10 inches.

The actual falls were below 7 inches in the north of Chota Nagpur and the adjacent part of South Bihar, and below 5 inches at a few scattered stations in that region. In the south of Chota Nagpur, the greater part of Orissa, the southern and eastern parts of Lower Bengal, the greater part of North Bengal and the extreme north of Bihar falls were 10 inches and upwards, the larger amounts as usual being in the south-east and north-east. In Cooch Behar, Jalpaiguri and Darjeeling, Netrokona and Noakhali amounts exceed 20 inches, and at a few stations in the extreme north of North Bengal falls were upwards of 30 inches.

The comparison of the actual rainfall in the various large divisions of the Province with the normal is most accurately and conveniently shown in the form of a percentage. The figures representing the rainfall for the month, calculated in this way, are included in the table below under the heading of August. This table really gives a condensed summary of

the rainfall statistics of the present year up to date for each meteorological division, the first eight columns giving the actual average rainfall in each division in each month, expressed as a percentage of the normal, while the ninth column gives the total rainfall for the first eight months expressed as a percentage of the normal rainfall for that period:—

Meteorological Divisions.	January.	February.	March.	April.	May.	June.	July.	August.	Actual rainfall of first eight months of 1902 expressed as a percentage of the normal fall for the period.
South-West Bengal	Nil	2	166	250	136	57	110	89	99
North Bengal ...	11	2	261	154	112	108	112	123	116
East Bengal ...	Nil	1	85	308	127	131	129	92	127
Bihar ...	13	4	263	177	99	60	111	71	86
Orissa ...	104	1	97	218	82	58	169	102	111
Chota Nagpur ...	31	41	82	116	116	33	111	59	75

The following table gives full data for the comparison of the actual and normal rainfall of the month of August in all districts of the Province:—

Percentage Table for August 1902.

Division.	District.	Normal district rainfall for August.	Actual district rainfall for August 1902.	Percentage of actual to normal rainfall.	Percentage, excess (+), deficit (−).
South-West Bengal	Burdwan	11·76	7·50	64	— 36
	Birbhum	11·45	12·34	108	+ 8
	Bankura	11·89	6·98	59	— 41
	Midnapore	12·86	13·20	103	+ 3
	Hooghly	12·55	9·56	76	— 24
	Howrah	11·39	11·23	99	— 1
	24-Parganas	13·29	11·14	84	— 16
	Calcutta	12·69	14·01	110	+ 10
	Nadia	10·96	8·43	77	— 23
	Murshidabad	10·45	13·21	126	+ 26
	Jessore	10·67	8·38	79	— 21
	Khulna	12·32	9·99	81	— 19
North Bengal ...	Rajshahi	10·35	11·52	111	+ 11
	Dinajpur	12·41	15·25	123	+ 23
	Jalpaiguri	26·53	30·17	114	+ 14
	Darjeeling	24·94	26·42	106	+ 6
	Cooch Behar	19·28	30·73	159	+ 59
	Rangpur	12·58	14·59	116	+ 16
	Bogra	11·48	14·63	127	+ 27
	Pabna	11·04	9·37	85	— 15
East Bengal ...	Dacca	12·59	12·48	99	— 1
	Mymensingh	14·96	16·46	110	+ 10
	Faridpur	11·49	11·23	98	— 2
	Backergunge	16·21	14·18	87	— 13
	Tippera	12·78	12·12	95	— 5
	Noakhali	23·92	23·25	97	— 3
	Chittagong	21·92	15·60	71	— 29
	Chittagong Hill Tracts ...	16·44	12·76	78	— 22
Bihar ...	Patna	11·21	8·82	79	— 21
	Gaya	11·72	6·69	57	— 43
	Shahabad	11·64	6·63	57	— 43
	Saran	11·00	7·29	66	— 34
	Champaran	12·81	12·02	94	— 6
	Muzaffarpur	11·00	9·87	90	— 10
	Darbhanga	12·51	10·19	81	— 19
	Monghyr	11·41	6·86	60	— 40
	Bhagalpur	11·66	8·31	71	— 29
	Purnea	14·98	13·22	88	— 12
	Malda	11·07	8·43	76	— 24
	Sonthal Parganas	11·66	7·88	68	— 32
Orissa ...	Cuttack	12·77	12·39	97	— 3
	Balasore	11·86	9·71	82	— 18
	Puri	12·31	15·40	125	+ 25
Chota Nagpur ...	Hazaribagh	12·58	7·17	57	— 43
	Ranchi	13·31	10·65	80	— 20
	Palamau	13·42	5·45	41	— 59
	Manbhum	12·55	9·20	73	— 27
	Singhbhum	14·56	7·17	49	— 51

The following table gives the summary of the temperature and rainfall data of each of the seven meteorological divisions of the Province for the month of August 1902:—

Meteorological Divisions.	Temperature.						Rainfall—							
	Highest observed during month.	Lowest observed during month.	Averages for month.			Average mean of month above or below normal mean of month.	Of month.			Rainy days.			Since 16th May 1902.	
			Of highest of each day.	Of lowest of each day.	Of mean for each day.		Average.	Normal average.	Variation.	Average number in month.	Normal average number in month.	Variation.	Average.	Normal average.
South-West Bengal	97·3	73·9	90·6	79·2	85·0	+1·5	10·52	11·80	—1·28	13·60	15·53	—1·93	33·43	37·76
North Bengal	95·2	72·1	88·6	78·7	83·7	+0·7	18·69	15 23	+3·46	14 47	15·32	—0·85	63 89	57·61
East Bengal	94·8	73·3	88·0	78·2	83·1	+1·0	14·81	16·14	—1·33	16·66	17·89	—1·23	67·88	57·32
Bihar	98·2	72 3	90 7	70·4	85·1	+1·4	8·40	11·83	—3·43	11·51	13·80	—2·29	29·03	34·07
Orissa	96·4	74·1	89·5	78 5	84·0	+1·1	12·62	12·33	+0·29	15·43	15·12	+0·31	38 79	35·79
Chota Nagpur*	96·6	71·4	88·3	76 2	82·3	+1·7	7 90	13·29	—5·39	12·87	16·44	—3·57	27·42	32 07
Assam	98·6	70·5	87·0	77·6	82 8	0								

* Purulia not included.

Meteorological Office, Bengal,
The 16th September 1902.

C. Little,
Meteorological Reporter to the Govt. of Bengal.

Vital Statistics of the Districts of Bengal for the month of July 1902.

Divisions.	Districts.	Population under registration.	BIRTHS.		DEATHS.																AVERAGE OF CORRESPONDING MONTH OF PREVIOUS FIVE YEARS.		Remarks.
					CHOLERA.		SMALL-POX.		PLAGUE.		FEVER.		DYSENTERY AND DIARRHŒA.		RESPIRATORY DISEASES.		INJURY.		OTHER CAUSES.		TOTAL OF ALL CAUSES.				
			Number registered.	Ratio per 1,000 of population per annum.	Number registered.	Ratio per 1,000 of population per annum.	Number registered.	Ratio per 1,000 of population per annum.	Number registered.	Ratio per 1,000 of population per annum.	Number registered.	Ratio per 1,000 of population per annum.	Number registered.	Ratio per 1,000 of population per annum.	Number registered.	Ratio per 1,000 of population per annum.	Number registered.	Ratio per 1,000 of population per annum.	Number registered.	Ratio per 1,000 of population per annum.	Number registered.	Ratio per 1,000 of population per annum.	Number registered.	Ratio per 1,000 of population per annum.	
1	2	3	4	5	6	7	8	9	10	11	12	13	14	15	16	17	18	19	20	21	22	23	24	25	26
Burdwan ...	Burdwan	1,532,475	3,589	28·08	112	·84	23	·19	..	...	2,110	16 44	72	·48	3	·01	62	·48	641	4·92	3,023	23·64	2,668	20·88	
	Birbhum	902,280	2,486	33·00	35	·36	3	·03	...	...	1,023	13 56	21	·24	...	...	31	·36	384	5 04	1,497	19·80	1,798	23·88	
	Bankura	1,116,411	3,110	33 36	53	·48	101	1·08	...	...	1,614	17·28	37	·36	...	...	47	·48	532	5·64	2,384	25·56	2,059	22·08	
	Midnapore	2,789,114	5,739	24·60	373	1·56	783	3 36	1	·003	4,036	17 28	153	·60	2	·003	90	·36	941	3·96	6,378	27 36	5,427	23·28	
	Hooghly, including Serampore.	1,049,282	1,750	19·92	78	·84	16	·12	...	...	1,613	18 36	146	1·56	33	·36	86	·96	311	3 48	2,283	26 04	2,011	22 92	
	Howrah	850,514	1,614	22·68	118	1·56	37	·48	7	·09	735	10 32	259	3·60	4	·04	58	·72	423	5·88	1,640	23·04	1,636	23·04	
	24-Parganas	2,078,359	4,114	23·64	131	·72	62	·36	...	...	2,372	13·68	123	·60	5	·01	125	·72	510	2 88	3,351	19 32	3,014	17 40	
	Calcutta	847,796	802	11·28	178	2·40	3	·03	75	·96	331	5·28	194	2·64	227	3·12	34	·48	683	9 60	1,775	25 08	1,673	23 64	
Presidency ...	Nadia	1,667,491	3,786	27·24	27	·12	...	...	...	.	2,952	21·24	12	·07	..	.	101	·72	372	2·64	3,464	24·84	2,784	19·92	
	Murshidabad	1,333,184	3,804	34·20	25	·12	9	·07	...	...	2,307	20·76	5	·03	1	·008	88	·72	445	3·96	2,880	25 92	2,779	24·96	
	Jessore	1,813,135	3,433	22·68	29	·12	5	·02	...	...	3,014	19 92	7	·03	...	...	113	·72	279	1 80	3,447	22 80	3,345	22·08	
	Khulna	1,253,043	3,300	31·56	41	·36	8	·06	...	...	1,767	16 92	46	·36	3	·02	75	·60	656	6 26	2,596	24·84	2,404	22 92	
	Rajshahi	1,462,467	3,513	28 80	248	1·92	1	·007	...	...	4,409	36·12	9	·07	7	·04	104	·84	351	2 04	5,029	41·16	3,228	26·40	
	Dinajpur	1,567,080	5,166	39·60	64	·48	44	·24	...	...	4,944	37·80	7	·04	2	·01	94	·60	294	2·16	5,449	41·64	3,707	28 32	
Rajshahi ...	Jalpaiguri	787,380	2,214	33·72	4	·06	13	·12	..	...	2,015	30 60	20	·24	...	...	21	·24	47	·60	2,120	32·28	2,059	31 32	
	Darjeeling	249,117	667	32·04	1	·04	...	...	...	...	576	27·84	112	5·28	..	...	9	·36	115	5 52	813	39·12	966	46·44	
	Rangpur	2,154,161	5,694	31 08	5	·02	22	·48	...	...	5,671	31·56	5	·02	.	...	53	·24	218	1 20	6,044	33 60	4,357	24·24	
	Bogra	854,533	2,434	34·08	93	1·20	40	·48	...	...	2,572	36·00	7	·09	...	...	68	·84	191	2 76	2,971	41·64	1,603	22·44	
	Pabna	1,420,461	2,103	17·76	7	·04	36	·24	...	...	3,200	27·00	2	·01	...	...	80	·60	105	·84	3,430	28·92	2,387	20·16	
Dacca ...	Dacca	2,649,522	6,002	27·12	61	·24	57	·24	...	...	3,846	17 40	138	·60	22	·09	127	·48	905	4 08	5,158	23 28	4,076	18·36	
	Mymensingh	3,915,068	9,523	29·16	31	·08	136	·36	...	...	5,963	18 24	32	·09	1	·002	142	·36	1,065	3·12	7,360	22·44	6,479	19 80	
	Faridpur	1,937,646	4,276	26 40	20	·12	4	·02	...	...	3,901	24·12	32	·12	...	...	87	·48	792	4·80	4,836	29 88	3,716	22·92	
	Backergunge	2,291,752	5,072	36·52	65	·24	3	·01	...	...	5,332	17·64	26	·12	...	...	134	·60	1,330	6 96	4,940	25·80	4,451	23·28	
Chittagong ...	Tippera	2,117,991	4,799	27·12	17	·09	25	·12	...	...	2,614	14 76	18	09	20	·10	131	·72	773	4·32	3,598	20·28	3,273	18·48	
	Noakhali	1,141,728	3,440	36·12	5	·04	...	...	...	...	2,451	25·68	5	·04	1	·01	76	·72	357	3 72	2,895	30·36	2,920	30·60	
	Chittagong	1,353,250	4,794	42·48	12	·12	2	·01	...	...	2,913	25 80	8	·05	...	...	70	·60	148	1·20	3,153	27·84	3,764	33·36	
	Chittagong Hill Tracts ...																								Not under registration.
Patna ...	Patna	1,624,985	5,106	37·68	1,112	8·16	441	3·24	...	...	2,292	16·92	535	3 84	39	·12	128	·84	2,161	15·84	6,699	49·44	5,506	40 56	
	Gaya	2,059,933	6 473	37·68	784	4·56	261	1 44	...	...	5,066	29·40	83	·48	...	...	149	·84	940	5 40	7,288	42 36	7,221	42·00	
	Shahabad	1,962,696	6,609	40·32	114	·60	17	·09	1	·006	2,900	18·24	14	·08	...	...	109	·60	749	4 56	3,984	24·36	6,115	37·32	
	Saran	2,409,509	7,541	37·44	127	·60	57	·24	16	·06	2,738	13·56	331	1·56	...	...	206	·96	2,427	12·00	5,902	29·28	6,496	32·28	
	Champaran	1,790,463	5,803	38·88	649	4·32	30	·12	...	...	3,205	21·48	10	·06	...	...	203	1·32	1,106	7·32	5,803	34·80	5,985	40·08	
	Muzaffarpur	2,754,796	9,228	40 44	1,328	5 76	42	·12	...	...	4,655	20·16	88	·36	1	·003	398	1·32	1,444	6·24	7,864	34 20	7,445	32·40	
	Darbhanga	2,912,611	10,313	42 48	280	·96	54	·12	2	·007	4,486	18·36	53	·12	...	...	247	·96	1,015	4 08	6,116	25·08	7,159	29 40	
Bhagalpur ...	Monghyr	2,068,804	6,381	36 96	256	1·32	105	·48	13	·07	2,651	15·36	19	·10	...	...	178	·96	703	3·96	3,902	22·56	6,077	29·40	
	Bhagalpur	2,098,963	6,690	38 40	137	·72	60	·24	...	...	2,855	16·32	8	·03	..	.	134	·72	533	3 00	3,727	21·48	4,059	23·76	
	Purnea	1,674,794	5,067	32·52	3	·01	21	·12	...	...	3,645	23·28	6	·03	...	...	77	·48	135	·84	3,887	24·84	3,901	24·96	
	Malda	884,030	2,671	36·24	1	·01	9	·12	...	...	1,726	23·40	7	·08	2	·02	36	·48	202	2 64	1,983	26·88	2,044	27·72	
	Santhal Parganas	1,869,737	6,210	41·16	56	·36	164	1·08	...	...	2,471	16·32	13	·08	...	...	74	·48	342	2·16	3,126	20·64	3,657	24·24	
Orissa ...	Cuttack	2,062,758	6,107	35·52	675	3 84	141	·72	...	...	1,682	9 72	556	3·12	33	·12	157	·84	1,285	7·44	4,528	26·28	5,606	32·52	
	Balasore	1,071,197	2,950	33 00	289	3 12	102	1·08	...	...	760	8·40	120	1·32	...	...	68	·72	791	8 76	2,128	23 76	2,672	29·88	
	Puri	1,017,284	2,671	31·44	1,331	15·60	30	·36	...	...	585	6·84	490	5 76	40	·36	67	·72	1,085	12 72	3,637	42·84	3,107	41·28	
	Angul and Khondmals ...																								Not under registration.
Chota Nagpur	Hazaribagh	1,177,961	4,240	43·08	337	3·36	55	·48	...	...	1,996	20 28	70	·60	...	...	61	·60	618	6·24	3,136	31·92	3,164	32·16	
	Ranchi	1,187,925	4,636	46 92	...	...	21	·12	...	...	1,464	14·76	140	1·32	...	...	66	·60	709	7 08	2,409	24·24	2,551	25·68	
	Palamau	619,600	2,250	43 56	45	·84	50	·96	...	...	920	17 76	17	·24	...	...	61	1·08	238	4·56	1,351	25·68	2,092	40·44	
	Manbhum	1,301,364	4,868	44 88	125	1·08	234	2·04	...	...	2,073	19·08	39	·24	...	...	63	·48	672	6·12	3,206	29·52	2,999	27·60	
	Singhbhum	613,379	1,878	36 72	4	·07	285	5·52	...	...	757	14·76	14	·24	...	..	30	·48	144	2·76	1,254	24·12	962	18·72	
	Total ...	74,428,193	205,049	33·00	9,446	1·44	3,708	·48	115	·01	121,398	19·56	4,114	·60	436	·06	4,527	·72	30,056	4·80	173,800	27·96	167,412	26·88	
	Average of corresponding month of previous five years	.....	193,909	31 20	16,138	2·52	1,665	·24	Data not available.		111,695	18·00	4,075	·60	Data not available.		4,539	·72	29,000	4·56	167,412	26·88	.... .	.... .	
	Difference + or — ...	.....	+11,140	+1·80	—6,692	—1 08	+2,043	+·24			+9,703	+1·56	+39	Equal			—312	Equal	+1,056	+·24	+6,388	+1 08	.. .	.... .	

OFFICE OF SANITARY COMMISSIONER FOR BENGAL,
[redacted] 14th September 1902.

B. H. DEANE, CAPTAIN, I.M.S.,
Offg. Sanitary Commissioner for Bengal.

Vital Statistics of Towns in Bengal with a population of 20,000 and over during the month of July 1902.

Districts.	Towns.	Population under registration.	BIRTHS.		DEATHS.																AVERAGE OF CORRESPONDING MONTH OF PREVIOUS FIVE YEARS.		Remarks.
					CHOLERA.		SMALL-POX.		PLAGUE.		FEVER.		DYSENTERY AND DIARRHŒA.		RESPIRATORY DISEASES.		INJURY.		OTHER CAUSES.		TOTAL OF ALL CAUSES.				
			Number registered.	Ratio per 1,000 of population per annum.	Number registered.	Ratio per 1,000 of population per annum.	Number registered.	Ratio per 1,000 of population per annum.	Number registered.	Ratio per 1,000 of population per annum.	Number registered.	Ratio per 1,000 of population per annum.	Number registered.	Ratio per 1,000 of population per annum.	Number registered.	Ratio per 1,000 of population per annum.	Number registered.	Ratio per 1,000 of population per annum.	Number registered.	Ratio per 1,000 of population per annum.	Number registered.	Ratio per 1,000 of population per annum.	Number registered.	Ratio per 1,000 of population per annum.	
1	2	3	4	5	6	7	8	9	10	11	12	13	14	15	16	17	18	19	20	21	22	23	24	25	26
Burdwan	1. Burdwan	35,022	36	12·24	6	2·04	...	...	...	...	56	19·03	5	1·68	...	...	4	1·32	5	1·68	76	26 04	68	23·28	
Bankura	2. Bankura	20,737	31	17·88	...	...	3	1·68	...	...	19	10·92	...	...	...	...	...	...	14	8·04	36	20·76	57	32·88	
Midnapore	3. Midnapore	33,140	40	14·40	13	4·68	3	1·08	...	...	41	14·76	11	3·96	1	·36	3	1·08	34	12·24	106	38·28	98	35·40	
Hooghly	4. Hooghly and Chinsura	29,383	56	22·80	3	1·20	1	·36	...	...	42	17·04	9	3·60	5	2·04	2	·72	15	6·12	77	31·44	87	35·52	
	5. Serampore	44,451	61	16·44	5	1·32	...	...	...	...	65	16·92	18	4·80	1	·24	5	1·32	13	3·48	105	28·32	101	27·24	
Howrah	6. Howrah	157,594	221	17·04	41	3·12	1	·10	7	·48	131	9·96	84	6·36	4	·24	6	·36	128	9·72	402	30·60	330	25·08	
	7. Cossipore-Chitpur	40,750	35	10·20	4	1·08	...	...	...	...	29	8·52	5	1·44	...	...	1	·24	4	1·08	43	12·60	34	9·96	
	8. Maniktala	33,367	20	7·32	1	·36	...	...	...	...	17	6·24	2	·72	...	...	1	·36	4	1·44	25	9·24	26	9·60	
24-Parganas	9. South Suburban	26,374	60	22·68	5	2·16	...	...	...	...	23	10·44	1	·36	...	...	3	3·60	4	1·80	41	18·60	94	42·72	
	10. Garden Reach	28,211	25	10·56	5	2 04	...	...	...	...	29	12·24	1	·36	...	...	2	·84	...	...	37	15·72	Data not available.		
	11. Baranagore	26,433	23	10·80	3	1·32	...	...	...	...	16	7·44	5	2·28	...	...	...	...	2	·84	26	12·24	83	39·12	
	12. Naihati	23,753	25	12·60	...	...	...	...	...	...	30	15·12	2	·96	...	...	1	·48	8	3·96	41	20 64	48	24·24	
	13. Bhatpara	21,540	24	13·32	2	1·08	...	...	...	...	26	14·40	6	3·24	...	...	2	1·08	6	3·24	42	23·28	Data not available.		
Calcutta	14. Calcutta	847,796	832	11·28	178	2·40	3	·03	75	·96	381	5·28	194	2·64	227	3·12	34	·48	683	9·60	1,775	25·08	1,673	23·64	
Nadia	15. Krishnagar	24,547	44	21·48	...	...	...	...	...	...	41	20·52	...	...	...	...	...	...	5	2·40	46	22·44	40	19·44	
	16. Santipur	22,898	63	27·84	7	3·12	...	...	...	...	42	18·72	1	·36	...	...	1	·36	8	3·48	59	26·28	54	24·00	
Murshidabad	17. Berhampore	24,397	23	11·28	...	...	...	...	...	...	38	18·60	...	...	...	...	...	...	10	4·80	48	23·52	71	34·92	
Rajshahi	18. Rampur Boalia	21,589	38	21·12	6	3·24	...	...	...	...	38	21·12	2	1·08	...	...	2	1·08	6	3·24	54	30·00	48	26·64	
Pabna	19. Sirajganj	23,114	24	13·56	...	...	...	...	...	...	45	23·28	...	...	...	...	...	...	1	·48	46	23·88	33	17·04	
Dacca	20. Dacca	90,542	149	19·68	19	2·40	...	...	...	...	96	12·96	13	1·68	3	·36	2	·24	77	10·20	212	27·96	208	26·76	
	21. Narayanganj	24,472	33	16·08	...	...	...	...	...	...	12	5·88	4	1 92	...	...	4	2·16	1	·48	52	28·08	50	27 00	
Chittagong	22. Chittagong	22,140	19	10·20	2	1·08	...	...	...	...	44	23·76	1	·48	...	...	5	·36	120	10·68	395	55·16	517	45·96	
Patna	23. Patna City	136,785	331	29·40	27	2·40	20	1·68	...	...	172	15·24	51	4·44	...	...	8	2·04	63	16·68	215	57 24	171	45·48	
	24. Bihar	45,063	115	30·60	81	21·48	2	·48	...	...	52	13·80	9	2·28	...	...	3	·96	49	17 40	89	31 68	104	36 96	
	25. Dinapore	38,899	81	25·80	3	·96	...	...	...	...	32	11·28	2	·60	...	...	7	1·08	65	10·92	258	43·32	349	58·68	
Gaya	26. Gaya	71,248	210	35·28	23	3·84	4	·60	...	...	122	20 52	37	6·12	...	...	5	1·20	18	4·56	65	16·80	122	31·68	
Shahabad	27. Arrah	46,170	22	23·88	...	...	...	...	1	·24	59	10·08	2	·48	...	...	...	...	5	2·52	61	30·84	146	74·04	
	28. Sasaram	23,644	100	50·64	...	...	...	...	...	...	55	27·84	1	·48	...	...	7	1·80	93	24·24	121	31·56	183	47·76	
Saran	29. Chapra	46,901	123	39·04	...	...	2	·48	...	...	9	2·28	10	2·28	...	...	...	...	22	10·68	66	32·04	79	38·28	
Champaran	30. Bettiah	24,696	79	38·28	9	4·32	...	...	...	...	35	16·92	...	...	...	...	...	...	22	10·68	66	32·04	113	29·40	
Muzaffarpur	31. Muzaffarpur	45,617	111	29·16	17	4·44	...	...	...	...	57	14·88	14	3·60	1	·24	1	·24	46	12·00	136	35·76	76	42·60	
	32. Hajipur	21,398	68	38·04	...	...	...	...	...	...	13	7·20	8	4·44	...	...	5	2·76	38	21·24	84	35 88	76	42·60	
Darbhanga	33. Darbhanga	66,244	194	35·04	2	·36	3	·48	...	...	24	4·32	4	·72	...	...	3	·48	121	21·84	157	28·44	163	29·28	
Monghyr	34. Monghyr	35,880	146	48·72	1	·24	...	...	13	4·32	37	12·36	2	·60	...	...	5	1·56	89	19·68	117	39·12	157	52·44	
Bhagalpur	35. Bhagalpur	75,760	169	25·32	1	·12	3	·36	...	...	88	13·92	3	·36	...	...	1	·12	37	5·76	133	21·00	200	31·56	
Cuttack	36. Cuttack	51,364	116	27 00	17	3·96	...	...	...	...	30	6·96	11	2·52	...	...	...	...	28	6·48	86	20·04	157	36·60	
Balasore	37. Balasore	20,880	54	30·96	2	1·08	...	...	...	...	8	4·56	1	·48	...	...	1	·48	10	5·64	22	12·60	55	31·56	
Puri	38. Puri	49,334	30	7·20	376	91·44	...	...	...	...	80	19 44	35	8·40	4	·96	3	·72	69	16·68	567	137·88	306	74·40	
Ranchi	39. Ranchi	25,970	22	12·84	...	...	...	...	...	...	17	7·80	7	3 12	...	...	2	·84	8	3·60	34	15·60	66	30·48	
	Total of all towns with a population of 20,000 and over	2,441,963	3,880	18·96	859	4·20	45	·12	96	·36	2,131	10·44	561	2·64	246	1·20	134	·60	1,891	9·24	5,963	29·28	6,183	30·36	
	Average of the corresponding month of previous five years	.....	4,061	19·92	808	3·96	53	·24	Data not available.		2,576	12 60	643	3·12	Data not available.		129	·60	1,974	9·60	6,183	30·36	...	...	
	Difference + or −	.....	−181	−·96	+51	+·24	−8	−·12			−445	−2·16	−82	−·48			+5	Equal	−83	−·36	−220	−1·08	..	...	

OFFICE OF SANITARY COMMISSIONER FOR BENGAL,
The 13th September 1902.

B. H. DEARE, CAPTAIN, I.M.S.,
Offg. Sanitary Commissioner for Bengal.

IRRIGATION DEPARTMENT, BENGAL.

IRRIGATION OPERATIONS FOR THE OFFICIAL YEAR 1902-1903.

Areas leased for Irrigation up to end of July 1902.

Circle.	District.	Canal.	Estimated full discharge.	Average discharge in month.	Discharge utilised.	Approximate area of land irrigated during the year up to the end of the month.	Approximate area of land under irrigation up to the same date last year.	Details of areas leased.								Rainfall, 1902-1903.		Rainfall, 1901-1902.		Remarks.
								Long-term leases.	Season leases.						Grand Total.	During month.	Up to end of month.	During month.	Up to end of month.	
									Kharif.	Rabi.	Sugarcane.	Bhadoi.	Hot-weather.	Total.						
1	2	3	4	5	6	7	8	9	10	11	12	13	14	15	16	17	18	19	20	21
			C. ft.	C. ft.	C. ft.	Acres.	Acres.	Acres.	Acres.	Acres.	Acres.	Acres.	Acres.	Acres.	Acres.	Inches.	Inches.	Inches.	Inches.	
Orissa	Cuttack	Taldanda, 1st reach	1,342	406	95	13,733	10,572	13,433	300	.....	.....	.....	.....	300	13,733	23·75	33·03	14·07	19·07	Kulsai.
		Ditto, 2nd ,,	566	154																
		Machgaon	766	252	181	29,769	15,375	29,002	767	.....	.....	.....	.....	767	29,769	19·50	27·00	10·45	14·80	Balia.
																26·96	34·79	16·41	21·11	Jagatsingpur.
		Kendrapara	1,100	612	471	50,352	39,965	46,413	3,921	.....	6	.....	12	3,939	50,352	16·19	26·86	8·87	17·30	Kendupatna.
		Gobri	373	69	51	4,889	3,173	4,171	718	.....	.....	.....	.....	718	4,889	17·99	30·79	4·41	12·42	Marsaghai.
		Do. Extension	648	36	14	2,471	2,179	2,406	65	.....	.....	.....	.....	65	2,471	16·96	27·93	4·99	12·10	Kendrapara.
		Patamundi	985	174	136	17,157	6,749	14,443	2,714	.....	.....	.....	.....	2,714	17,157	14·94	26·80	7·66	18·06	Ichapur.
		High Level, Range I	608	330	187	21,110	21,705	23,011	975	.....	7	.....	1	983	23,994	21·69	35·68	12·07	22·32	Nurtang.
		Ditto, do. II	727	16	22*	3,207	3,314	4,646	35	.....	.....	.....	.....	35	4,681	19·77	34·24	10·89	18·28	Jenapur.
		Jajpur Canal, including Dudhai Channel	700	54	55*	5,349	10,354	3,778	1,517	.....	55	.....	19	1,591	5,369	No gauge.				
	Balasore	High Level, Range III	727	348	332*	34,334	12,267	31,901	1,909	.....	179	.....	181	2,269	34,170	20·11	32·30	8·26	13·96	Jajpur.
		Total	.....	.....	.....	182,371	127,652	178,204	12,921†	.....	247	.....	213	13,381	186,585	15·08	27·38	8·48	16·23	Akhoyapada.
		Total of the corresponding period of last year	.....	.....	.....	.....	.....	133,423	13,951‡	.....	346	.....	57	14,354	147,777	.....	.....	.....	.....	
South-Western	Midnapore	Midnapore	1,411	304·90	268·82	61,456	65,746	57,635	10,973	.....	.....	.....	.....	10,973	68,608	13·09	31·61	9·15	23·26	
	Howrah	Panchkura	522	47·77	53·23	6,428	4,066	8,154	56	.....	.....	.....	.....	56	8,210	16·04	29·75	8·75	23·97	
		Tidal Reaches, Ranges I & II	.....	.....	.....	52	...	356	10	.....	.....	.....	.....	10	360	13·75	30·57	14·36	32·62	
		Total	.....	.....	.....	67,936	69,812	66,139	11,039†	.....	.....	.....	.....	11,039	77,178	.....	.....	.....	.....	
		Total of the corresponding period of last year	.....	.....	.....	.....	.....	58,842	16,894†	.....	.....	.....	.....	16,894	75,736	.....	.....	.....	.....	
Sone	Shahabad	Western Main	4,342	1,988	73	21,300	18,644	15,744	5,450	.....	.....	.....	1,269	6,719	22,463	14·30	16·51	7·32	9·11	
		Buxar	1,226	641	426	88,564	75,723	67,959	15,191	.....	.....	.....	6,757	21,948	89,907					
		Arrah	2,000	1,097	770	140,834	130,478	125,781	17,196	.....	.....	.....	15,995	33,191	159,972	15·68	19·14	7·64	10·18	
	Patna and Gaya.	Eastern Main	3,012	2,499				1,782	1,261	.....	.....	.....	44	1,313	3,095					
		Patna	1,466	427	306	70,388	71,299	84,769	15,155	.....	.....	.....	3,001	18,156	72,925	10·82	14·00	7·45	10·50	
		Total	.....	.....	.....	320,598	298,643	287,035	54,361	...	.....	.....	27,026	81,327	348,362	...	.....	.....	.....	
		Total of the corresponding period of last year	.....	.....	.....	.....	.....	254,629	53,564	.....	.....	.....	25,053	79,617	334,246	.....	.....	.....	.....	
		Grand Total	.....	.....	.....	570,905	496,107	506,378	78,221	.....	247	.....	27,279	105,747	612,125	.....	.....	.....	.....	
		Grand Total of the corresponding period of last year	.....	.....	.....	.....	.....	446,394	84,409	..	346	....	26,110	110,865	557,759	.....	.....	.....	.....	

* The differences between the average discharge and discharge utilised are due to leakages.
† Exclusively for provisional lease.
‡ Of this, 13,950 acres represent provisional lease, &c.

DARJEELING,
The 12th September 1902.

R. C. EDGE,
Under-Secy. to Govt. of Bengal.

GOVERNMENT OF BENGAL, IRRIGATION DEPARTMENT

Approximate return of traffic on the Circular and Eastern Canals for the week ending Saturday, the 13th September 1902, as compared with the corresponding week of the previous year.

Nature of Cargo	Week ending Saturday, the 13th September 1902			Week ending Saturday, the 14th September 1901		
	Number of boats	Weight of cargo.	Tollage.	Number of boats.	Weight of cargo	Tollage.
		Mds.	Rs		Mds	Rs
Rice and paddy	668	83,775	1,079	537	70,100	891
Jute	153	38,275*	605	167	38,700†	578
Firewood	46	28,600	431	84	39,425	594
Other articles	538	1,20,725	1,386	612	1,23,610	1,517
Total ...	1,408	2,71,435	3,451	1,400	2,71,835	3,580

* Weight by canal measurement, 37,712 maunds
† Ditto ditto, 37,400 ,,

Results of the Meteorological Observations taken at the Alipore Observatory from 7th to 13th September 1902.

Month.	Date.	Maximum in sun.	Number of hours of bright sunshine.	Mean pressure barometer at 32° Fahr.	Temperature. Mean.	Maximum.	Range.	Minimum.	Hygrometry. Mean wet bulb.	Vapour tension.	Dew point.	Humidity.	Wind. Prevailing direction.	Miles recorded.	Rain.	Weather.
1902.		°		Inches.	°	°	°	°	°	Inches	°	%			Inches.	
Sept.	7th	156·7	4 5	29·492	84·1	91·2	11·8	79·4	81·1	1 021	79·9	87	E and N ...	73	0·04	Chiefly cloudy, o, d.
,,	8th	115·3	Nil	·503	82·9	85·6	6·1	79·5	81·0	1·036	80·3	92	W by S and SSW	83	1·08	Cloudy, o, g, d, p, t, ∠.
,,	9th	134·9	0·2	·624	81·8	84·6	7·2	77·4	79 8	0 992	79·0	91	WSW, E and SSE	97	1·26	Chiefly cloudy, o, g, d, p, t, ∠.
,,	10th	148·7	2·9	·754	83·2	88·3	10·5	77·8	80·3	1·000	79·2	88	SSE ...	115	0·78	Chiefly cloudy, o, d, p, t, ∠.
,,	11th	151·4	2·9	·773	83·0	89·2	11·1	78·1	80·1	0·990	78 9	88	SSE ...	75	0·06	Chiefly cloudy, d.
,,	12th	148·0	3·9	·713	84·1	89·0	9 9	79·1	79·7	·956	77 9	81	SSE and S by W	102	0·01	Chiefly cloudy, d.
,,	13th	150·0	5·7	·725	85·4	90·8	10·4	80·4	80 4	·972	78 4	79	S by W and S ...	111	Nil	Partially cloudy.

	Inches.
The mean pressure of the seven days	29·656
The average pressure of the corresponding period for 24 years, Surveyor-General's Office	29·653
	Hours.
The total number of hours of bright sunshine	20·1
The maximum possible number of hours of sunshine	86·5
	°
The mean temperature of the seven days	83·5
The average temperature of the corresponding period for 24 years, Surveyor-General's Office	83·2
The extreme variation of temperature	13·8
The maximum temperature	91·2
	Miles.
The highest velocity of the wind in one hour	9
	%
The mean relative humidity	87
The average relative humidity of the corresponding period for 24 years, Surveyor-General's Office	86
	Inches
The total fall of rain from 7th to 13th September 1902	3·23
The average fall of the corresponding period for 24 years, Surveyor-General's Office	3·14
The total fall from 1st January to 13th September 1902	56·71
The average fall of the corresponding period for 24 years, Surveyor-General's Office	53·64

The mean pressure, temperature, &c., are deduced from the traces of the Barograph and Thermograph, and from eye observations.

The maximum and minimum temperatures are obtained from self-registering thermometers. All the thermometers are verified, and the readings have been corrected to a standard constructed and verified at the Kew Observatory. They are exposed under a thatched shed open at the sides, and are suspended four feet above the ground.

The barometer readings are corrected approximately to those of the standard, Newman's No. 86, formerly at the Surveyor-General's Office.

The hygrometric elements are obtained from Tables III, IV, and V of the official tables computed in the Meteorological Office, and based on Regnault's modifications of August's formula.

The directions and the movement of the wind are taken from the traces of a Beckley's anemograph.

The mouth of the rain-gauge is one foot above the ground.

o, overcast; g, gloomy; d, drizzling rain; p, passing temporary showers; t, thunder; lightning.

G. W. KÜCHLER,
for Meteorological Reporter to the Govt. of India and Director-General of Indian Observatories.

METEOROLOGICAL OFFICE, GOVT. OF INDIA;
Alipore (Calcutta), the 15th September 1902.

Weekly Return of Traffic Receipts on Indian Railways

EAST INDIAN RAILWAY.

Approximate Return of Traffic for week ended 30th August 1902 on 1,913·49 miles open.

	Coaching Traffic.		Merchandise and Mineral Traffic.		Other earnings (estimated).	Total earnings.	Traffic Train-miles run.		
	Number of passengers.	Coaching receipts.	Weight carried.	Receipts.			Coaching.	Merchandise.	Total.
		Rs. A. P.	Mds. s.	Rs. A. P. (a)	Rs. A. P.	Rs. A. P.			
Total traffic for the week	325,013	3,38,514 5 0	46,11,289 30	7,33,063 13 0	25,291 0 0	10,96 869 2 0	109,764	173,546	283,310
Or per mile of railway	.....	176 14 6	.....	383 1 8	13 3 6	573 3 8	.....	.....	.....
For previous 7½ weeks of half-year.	2,936,763*	27,94,576 1 0*	3,44,40,185 10†	57,79,576 6 0†	1,49,164 0 0‡	87,23,316 7 0	845,359§	1,324,023§	2,169,582
Total for 8½ weeks ...	3,261,776	31,33,090 6 0	3,90,51,473 0	65,12,640 3 0	1,74,455 0 0	98,20,185 9 0	955,123	1,496,569	2,451,692
Comparison.									
Total for corresponding week of previous year.	381,650§	3,45,474 15 9	50,06,446 0	8,60,263 10 3	20,034 10 10	12,25,773 4 10	105,875§	180,672§	286,548
Per mile of railway corresponding week of previous year.	..	187 15 4	.....	468 0 5	10 14 5	666 14 3	.....	.....	.....
Total for corresponding 8½ weeks of previous year.	3,513,389	36,36,905 10 11	4,60,99,880 0	81,90,485 5 0	1,77,120 15 9	1,20,04,511 15 8	965,143§	1,814,040§	2,779,184

(a) The decrease is chiefly in coal

* Added No. of passengers 689 and Rs. 607 } On account of difference between the approximate and audited figures for the week ended 20th
† Do. Mds. 3,25,235 and deducted „ 23,476 } July 1902.
‡ Deducted „ 12,667
§ Audited figures up to 26th July 1902.

1902. *Abstract of progressive weekly returns of all earnings for 1902 in comparison with 1901.*

Open mileage.	Period.	Coaching Traffic.		Merchandise and Mineral Traffic.		Other earnings.	Total.	Per mile of Railway.	Train mileage.	
		No. of Passengers.	Rs.	Mds.	Rs.	Rs.	Rs.	Rs.	No.	Rate. Rs. A. P.
*1,913·49	12 days of July ...	716,603	6,65,787	86,38,982	14,63,289	31,611	21,60,687	1,129	500,575	4 3 10
*1,913·49	Week ended 19th July ...	441,138	3,7s,481	47,42,891	8,02,446	16,685	11,97,613	626	288,531	4 2 5
*1,913·49	„ „ 26th „ ...	370,267	3,75,806	45,66,618	7,07,4 3	16,816	11,00,075	575	279,023	3 15 1
1,913·49	„ „ 2nd August	346,160	3,47,770	41,34,650	7,14,228	22 745	10,84,743	567	284,300	3 13 1
1,913·49	„ „ 9th „ ...	351,528	3,46,767	40,99,290	7,13,050	22,546	10,82,393	566	272,008	3 15 9
1,913·49	„ „ 16th „ ...	367,679	3,44,046	41,15,085	7,10,908	19,639	10,76,593	563	266,568	4 0 7
1,913·49	„ „ 23rd „ ...	353,388	3,33,919	41,12,667	6,68,173	19,122	10,21,214	534	269,577	3 12 7
1,913·49	„ „ 30th „ ...	325,013	3,38,514	46,11,290	7,33,064	25,911	10,96,869	573	283,310	3 14 2
	Totals up to date ...	3,261,776	31,33,090	3,90,51,473	65,12,641	1,74,455	98,20,186	589	2,451,692	4 0 1

Abstract of progressive weekly returns of all earnings for 1902 in comparison with 1901—concluded. *1901.*

		No. of Passengers.	Rs.	Mds.	Rs	Rs.	Rs.	Rs.	No.	Rate. Rs. A. P.
1,837·46	12 days of July ..	707,203	7,62,573	1,04,38,301	18,92,701	34,956	26,89,400	1,464	580,902	4 9 4
1,837·79	Week ended 20th July ...	385,819	3,75,944	54,41,787	9,89,248	19,462	13,77,344	749	335,917	4 3 7
1,838·04	„ „ 27th „ ...	416,037	4,34,998	50,18,440	9,75,870	20,231	14,31,099	779	328,316	4 6 5
1,838·04	„ „ 3rd August	427,584	4,86,766	53,95,540	9,67,492	19,932	14,74,210	802	335,217	4 6 4
1,838·04	„ „ 10th „ ...	418,883	4,53,909	53,28,299	8,91,256	20,579	13,65,744	743	319,146	4 4 6
1,838·04	„ „ 17th „ ...	398,098	4,41,553	51,57,112	8,18,702	21,739	12,82,144	698	301,468	4 4 1
1,838·04	„ „ 24th „ ...	358,115	3,38,888	46,31,863	8,01,868	21,047	11,58,797	630	289,670	4 0 0
1,838·04	„ „ 31st „ ...	381,650	3,45,475	50,06,446	8,60,264	20,035	12,25,774	667	286,548	4 3 4
	Totals up to date ...	3,513,389	36,36,906	4,60,99,880	81,90,485	1,77,121	1,20,04,512	737	2,779,184	4 5 1

* Audited figures.

TARKESSUR BRANCH RAILWAY.

Approximate Return of Traffic for week ended 30th August 1902 on 22 23 miles open.

	Coaching Traffic.		Merchandise and Mineral Traffic.		Other earnings (estimated).	Total earnings.	Traffic Train-miles run.		
	No. of passengers.	Coaching receipts.	Weight carried.	Receipts.			Coaching.	Merchandise.	Total.
		Rs. A. P.	Mds. s.	Rs. A. P.	Rs. A. P.	Rs. A. P.			
Total traffic for the week ...	17,391	4,315 8 0	22,439 30	541 3 0	5 0 0	4,901 11 0	1,065	123	1,188
Or per mile of railway ...	.....	194 2 1	.....	26 2 4	0 3 7	230 8 0	.....	.....	.....
For previous 7½ weeks of half-year	167,904*	40,077 14 0*	1,72,157 0†	4,639 3 0†	51 0 0‡	44,768 1 0	8,375§	965§	9,340
Total for 8½ weeks ...	185,485	44,393 6 0	1,94,576 30	5,220 6 0	56 0 0	49,669 12 0	9,340	1,088	10,428
Comparison.									
Total for corresponding week of previous year.	19,503	4,338 14 7	8,683 10	363 11 0	9 10 6	4,712 4 1	1,088	100	1,188
Per mile of railway corresponding week of previous year.	.....	195 2 11	.....	16 5 9	0 7 0	211 15 8	.....	.....	.....
Total for corresponding 8½ weeks of previous year.	194,003	43,323 11 3	70,816 30	2,839 14 0	77 6 9	46,734 0 0	9,097	607	10,604

* Added No. of passengers 1,220 and Rs. 235 } on account of difference between the approximate and audited figures for the week ended 26th
† Added Mds. 5,417 and „ 133 } July 1902.
‡ Deducted „ 2
§ Audited figures up to 26th July 1902.

TARKESSUR BRANCH RAILWAY - *concluded.*

1902. *Abstract of progressive weekly returns of all earnings for 1902 in comparison with 1901.*

Open mileage.	Period.	Coaching Traffic.		Merchandise and Mineral Traffic.		Other earnings	Total.	Per mile of railway	Train mileage.	
		No. of passengers.	Rs.	Mds.	Rs.	Rs.	Rs.	Rs.	No.	Rate. Rs. A. P.
*22·23	12 days of July ...	40,861	10,019	72,607	1,575	10	11,604	522	2,068	5 9 9
*22 23	Week ended 19th July	31 57	6,920	10,687	403	10	7,312	330	1,232	5 15 ...
*22·23	,, ,, 26th ,,	22,847	5,357	19,055	504	8	5,867	264	1,188	4 15 0
22 23	,, ,, 2nd August	17,7 3	4,097	15,096	361	7	4,467	201	1,188	3 12 2
22·23	,, ,, 9th ,, ...	19,044	4,717	17,069	909	7	5,633	253	1,188	4 11 10
22 23	,, ,, 16th ,, ...	18,606	4,791	16,245	304	5	5,1 0	229	1,188	4 4 8
22 23	,, ,, 23rd ,, ...	17,9 6	4,167	21,378	581	6	4,754	214	1,188	4 0 0
22·23	,, ,, 30th ,, ...	17,391	4,110	22,510	881	5	4,902	221	1,186	4 2 0
	Totals up to date ,,	185,485	44,993	1,94,577	5,220	56	49,669	236	10,428	4 12 3

Abstract of progressive weekly returns of all earnings for 1902 in comparison with 1901 - concluded. *1901.*

		No. of passengers.	Rs.	Mds.	Rs	Rs	Rs.	Rs	No.	Rate. Rs. A. P.
22·23	13 days of July ...	41 3·8	9,910	20 303	786	18	10,714	482	2,244	4 12 8
22·23	Week ended 19th July ,,	19,522	4,5·3	5,91)	267	8	4,80·	216	1,188	4 0 9
22·23	,, ,, 27th ,,	30,403	6,411	7,351	31·	6	727	313	1,232	5 7 4
22·23	,, ,, 3rd August	24,864	5,480	5,586	234	5	5,728	258	1,188	4 13 2
22·23	,, ,, 10th ,,	21,089	4,807	6,937	312	10	5,139	231	1,188	4 5 1
22·23	,, ,, 17th ,,	19,154	4,434	7, 207	276	8	4,718	212	1,188	3 15 7
22·23	,, ,, 24th ,,	18,040	3,901	5,841	281	6	4,198	189	1 188	3 8 6
22·23	,, ,, 31st ,, ,,	19,503	4,330	8,083	304	9	4,712	212	1,188	3 15 6
	Totals up to date	194,003	43 824	70,817	2,940	70	46,744	237	10,604	4 6 6

* Audited figures.

DELHI-UMBALLA-KALKA RAILWAY.

Approximate Return of Traffic for week ended 30th August 1902 on 162·24 miles open.

	Coaching Traffic.		Merchandise and Mineral Traffic.		Other earnings (estimated).	Total earnings.	Traffic Train-miles run.		
	No. of Passengers.	Coaching Receipts.	Weight carried.	Receipts.			Coaching.	Merchandise.	Total.
		Rs. A. P.	Mds. S.	Rs. A. P.	Rs. A. P.	Rs. A. P.			
Total traffic for the week	17,740	15,947 3 0	93,326 20	10,935 7 0	30 0 0	26,912 10 0	8,384	4,678	13,062
Or per mile of railway ..	..	98 4 8	..	67 6 5	0 3 0	165 14 1	...	...	...
For previous 7½ weeks of half-year	171,624*	1,43,374 14 0*	11,21,048 30†	77 102 8 0†	338 0 0‡	3,20,815 6 0	65,594§	36,975§	102,569
Total for 8½ weeks ...	189,364	1,59,322 1 0	12,14,375 10	88,037 15 0	368 0 0	2,47,728 0 0	73,978	41,654	115,631
COMPARISON.									
Total for corresponding week of previous year.	19,076	16,611 0 0	72,947 2)	8,726 0 10	55 6 6	25,392 7 4	7,938‡	5,571‡	13,530
Per mile of railway corresponding week of previous year.	..	102 6 2		53 12 7	0 5 5	156 8 2	...	...	...
Total for corresponding 8½ weeks of previous year.	190,618	1,59,476 0 8	10,19,962 0	1,00,767 10 5	404 8 6	2,60,648 3 7	71,234‡	33,514‡	104,749

* Added No. of passengers 277 and Rs. 2,301
† Do. maunds 8,333 and ,, 995 } On account of difference between the approximate and audited figures for the week ended 26th July 1902.
‡ Deducted ,, 15
§ Audited figures up to 26th July 1902.

1902. *Abstract of progressive weekly returns of all earnings for 1902 in comparison with 1901.*

Open mileage.	Period.	Coaching Traffic.		Merchandise and Mineral Traffic		Other earnings.	Total.	Per mile of railway.	Train mileage.	
		Number of Passengers.	Rs.	Mds.	Rs.	Rs	Rs.	Rs.	No.	Rate. Rs. A. P.
*162·24	12 days of July .	40,898	31,091	1,48,494	19,647	93	51,831	319	22,·83	2 4 5
*162 24	Week ended 19th ,,	22,411	17,902	5,62,410	15,204	42	33,372	205	13,707	2 6 10
*162 24	,, ,, 26th ,, ,,	26,297	22,107	1,02 087	8,894	32	31,033	191	13,778	2 4 0
162 24	,, ,, 2nd Aug. .	20,064	19,074	94,078	8,096	41	27,211	167	13,123	2 1 2
162·24	,, ,, 9th ,,	21,855	17,892	77,219	9,619	45	27,556	170	13,270	2 1 3
162 24	,, ,, 16th ,,	20,646	17,346	59,975	7,353	43	24,782	153	12,933	1 14 6
162·24	,, ,, 23rd ,,	19,453	16,863	76,180	8,196	42	25,101	155	12,970	1 15 6
162·24	,, ,, 30th ,, ..	17 740	15,947	93,326	10,935	30	26,912	166	13,062	2 1 0
	Totals up to date ..	189,364	1,59,322	12,14,375	88,038	368	2,47,728	175	115,631	2 2 3

Abstract of progressive weekly returns of all earnings for 1902 in comparison with 1901—concluded. *1901.*

		Number of Passengers.	Rs.	Mds.	Rs.	Rs.	Rs.	Rs.	No.	Rate. Rs. A. P.
162 24	12 days of July ...	41,383	31,192	3,15,809	30,744	82	62,018	382	21,948	2 13 3
162 24	Week ended 20th ,, .	23,979	17,801	88,131	10,706	49	28,555	176	11,711	2 7 0
162·24	,, ,, 27th ,, .	22,024	16,927	85,877	10,092	43	29,062	179	11,234	2 9 5
162·24	,, ,, 3rd Aug.	21,632	22,416	94,502	11,812	60	34,288	211	11,363	3 0 2
162·24	,, ,, 10th ,,	21,887	19,225	1,98,344	11,540	34	30,799	190	11,660	2 9 7
162·24	,, ,, 17th ,,	19,937	18,073	1,02,422	6,466	48	24,587	152	12,104	2 0 6
162·24	,, ,, 24th ,, ...	20,400	15,231	61,930	10,682	33	25,946	160	11 002	2 5 9
162·24	,, ,, 31st ,, ..	19,676	16,611	72,947	8,726	56	25 393	157	13,531	1 14 0
	Totals up to date	190,618	1,59,476	10,19,962	1,00,767	405	2,60,648	161	104,749	2 7 10

* Audited figures.

SOUTH BEHAR RAILWAY.

Approximate Return of Traffic for week ended 30th August 1902 on 78·76 miles open.

	Coaching Traffic.		Merchandise and Mineral Traffic.		Other earnings (estimated).	Total earnings.	Traffic Train-miles run.		
	Number of passengers.	Coaching receipts.	Weight carried.	Receipts.			Coaching.	Merchandise.	Total.
		Rs. A. P.	Mds. S.	Rs. A. P.	Rs. A. P.	Rs. A. P.			
Total traffic for the week	8,953	5,455 6 0	32,356 0	2,322 12 0	12 0 0	7,790 2 0	1,929	1,457	3,386‡
Or per mile of railway ..		(69 4 3	...	29 7 11	0 2 5	98 14 7	...	...	...
For previous 7½ weeks of half-year	87,126*	47,312 1 0*	2,76,561 30†	17,057 15 0†	168 0 0‡	64,538 0 0	15,058§	6,448§	21,506
Total for 8½ weeks ...	96,081	52,767 7 0	3,08,917 30	19,380 11 0	180 0 0	72,328 2 0	16,987	7,905	24,892
COMPARISON.									
Total for corresponding week of previous year	10,535	5,616 5 2	28,040 10	1,813 3 0	14 8 0	7,443 0 2	2,117	1,190½	3,307½
Per mile of railway corresponding week of previous year	...	71 5 0	...	23 0 2	0 2 10	94 8 0	...	...	...
Total for corresponding 8½ weeks of previous year	162,777	75,067 1 8	3,89,164 0	26,396 6 0	153 3 6	1,01,616 11 2	18,367	11,106½	29,373½

* Added No. of passengers 540 and deducted Rs. 624
† Deducted maunds 4,714 and added ,, 97 } On account of difference between the approximate and audited figures for the week ended 26th
‡ Do. ,, 12 } July 1902.
§ Audited figures up to 26th July 1902.

1902. *Abstract of progressive weekly returns of all earnings for 1902 in comparison with 1901.*

Open mileage.	Period.	Coaching Traffic.		Merchandise and Mineral Traffic.		Other earnings.	Total.	Per mile of railway.	Train mileage.	
		Number of passengers.	Rs.	Mds.	Rs.	Rs.	Rs.	Rs.	No.	Rate. Rs. A. P.
*78·76	12 days of July .	23,554	12,210	70,897	4,578	40	16,828	214	4,961	3 6 3
*78·76	Week ended 19th ,, ...	12,311	6,581	33,422	2,135	8	8,724	111	2,678	3 4 1
*78·76	,, ,, 26th ,, ..	11,735	5,894	41,404	2,349	9	8,251	105	2,835	2 14 7
78·76	,, ,, 2nd Aug. ...	10,414	5,543	33,813	2,183	28	7,754	98	2,914	2 10 7
78·76	,, ,, 9th ,, .	10,236	5,775	31,648	1,846	30	7,651	97	2,835	2 11 2
78·76	,, ,, 16th ,, ...	9,738	5,349	36,105	2,045	27	7,631	97	2,435	3 2 6
78·76	,, ,, 23rd ,, ...	9,138	5,760	27,473	1,923	26	7,709	98	2,448	3 2 5
78·76	,, ,, 30th ,, ...	8,955	5,455	32,356	2,323	13	7,790	99	3,386	2 4 10
	Totals up to date ...	96,081	52,767	3,08,918	19,381	180	72,328	105	24,892	2 14 6

Abstract of progressive weekly returns of all earnings for 1902 in comparison with 1901—concluded. *1901.*

		No. of Passengers.	Rs.	Mds.	Rs.	Rs.	Rs.	Rs.	No.	Rate. Rs. A. P.
78·76	13 days of July ...	20,350	10,058	57,747	6,177	24	16,249	206	6,143	2 10 4
78·76	Week ended 20th ,, ...	12,208	5,865	50,218	3,121	8	8,994	114	3,367	2 11 6
78·76	,, ,, 27th ,, ..	19,907	8,081	41,002	2,883	18	10,982	139	3,308	3 5 3
78·76	,, ,, 3rd Aug ..	32,048	13,656	51,906	3,215	14	16,885	214	3,386	4 15 9
78·76	,, ,, 10th ,, ...	31,942	13,849	49,144	3,542	34	17,425	221	3,307	5 4 3
78·76	,, ,, 17th ,, ...	23,221	11,728	38,833	2,740	21	14,489	184	3,308	4 6 1
78·76	,, ,, 24th ,, ...	11,546	6,212	35,066	2,906	20	9,138	116	3,307	2 12 3
78·76	,, ,, 31st ,, ...	10,525	5,616	28,040	1,812	15	7,443	95	3,308	2 4 0
	Totals up to date ..	162,777	75,067	3,89,164	26,396	154	1,01,617	146	29,374	3 7 4

* Audited figures.

BENGAL CENTRAL RAILWAY COMPANY, LIMITED.

Approximate Return of Traffic and Mileage for the week ended 30th August 1902 on 139 miles open.

	Coaching Traffic.		Merchandise and Mineral Traffic.		Other earnings.	Total earnings.	Traffic Train-miles run.		
	Number of passengers.	Coaching receipts.	Weight carried.	Receipts.			Coaching.	Merchandise.	Total.
		Rs. A. P.	Mds. S.	Rs. A. P.	Rs. A. P.	Rs. A. P.			
Total traffic for the week ...	26,050	11,324 0 0	1,36,482 0	17,834 0 0	74 0 0	29,232 0 0	3,354	4,516	7,870
Or per mile of railway	200	87 0 0†	982 0	128 0 0	1 0 0	216 0 0	.....	... .	.....
For previous 8 weeks of half-year*	273,291	1,08,532 0 0	4,43,485 0	47,543 0 0	1,526 0 0	1,57,601 0 0	26,363	22,657	49,020
Total for 9 weeks ...	299,341	1,19,856 0 0	5,79,967 0	65,377 0 0	1,600 0 0	1,86,833 0 0	29,717	27,173	56,890
COMPARISON.									
Total for corresponding week of previous year ...	20,342	13,254 0 0	1,94,984 0	25,279 0 0	5,571 0 0	43,104 0 0	2,877	7,334	10,211
Per mile of railway corresponding week of previous year	226	94 0 0	1,403 0	182 0 0	40 0 0	316 0 0	.....	.....	.....
Total to corresponding date of previous year	313,742	1,17,013 0 0	9,57,107 0	1,07,910 0 0	32,760 0 0	2,57,683 0 0	27,838	39,461	67,299

* Audited up to first 13 days of July 1902.
† Coaching traffic calculated on 130 miles only.

EASTERN BENGAL STATE RAILWAY.

(Including N. B., K.-D., Dacca, and Assam-Behar Sections.)

Approximate Return of Traffic and Mileage for the week ended 30th August 1902 on 861 miles open.

	Coaching Traffic.		Merchandise and Mineral Traffic.		Other earnings (including ferry).	Total earnings.	Traffic Train-miles run.		
	No. of passengers	Coaching receipts.	Weight carried.	Receipts.			Coaching.	Merchandise.	Total.
		Rs. A. P.	Mds. S.	Rs. A. P.	Rs. A. P.	Rs A P.			
Total traffic for the week ...	200,020	100,690 0 0	15,77,900 0	3,01,490 0 0	40,680 0 0	4,42,860 0 0	37,942	44,924	82,866
Or per mile of railway	232	117 0 0	1,833 0	350 0 0	30 0 0*	497 0 0*	...	...	...
For previous 8 weeks of half-year	1,696,450	7,86,630 0 0	67,62,280 0	12,58,540 0 0	93,930 0 0	21,39,100 0 0	292,464	284,418	576,882
Total for 9 weeks ...	1,896,470	8,87,320 0 0	83,40,180 0	15,60,030 0 0	1,34,610 0 0	25,81,960 0 0	330,406	329,342	659,748
Comparison									
Total for corresponding week of previous year .	169,538	86,474 0 0	15,30,992 0	2,88,452 0 0	83,662 0 0	4,58,588 0 0	37,084	48,124	85,208
Per mile of railway corresponding week of previous year ...	199	101 0 0	1,793 0	338 0 0	76 0 0	515 0 0	...	...	...
Total to corresponding date of previous year	1,672,691	8,25,362 0 0	87,71,988 0	15,10,830 0 0	1,94,962 0 0	25,31,154 0 0	327,407	354,155	681,562

* Excluding ferry earnings.

BRAHMAPUTRA-SULTANPUR RAILWAY

*Approximate Return of Traffic and Mileage for the week ended 30th August 1902 on *59·37 miles open.*

	Coaching Traffic		Merchandise and Mineral Traffic		Other earnings (including ferry).	Total earnings.	Traffic Train-miles run.		
	No. of passengers.	Coaching receipts.	Weight carried.	Receipts.			Coaching.	Merchandise.	Total.
		Rs. A. P.	Mds. S.	Rs A. P.	Rs. A. P.	Rs A. P.			
Total traffic for the week ...	5,760	1,740 0 0	44,310 0	5,140 0 0	60 0 0	6,940 0 0	1,016	1,024	2,040
Or per mile of railway .	97	29 0 0	745 0	87 0 0	1 0 0	117 0 0	..	...	...
For previous 8 weeks of half-year ...	51,110	15,380 0 0	2,18,770 0	20,830 0 0	370 0 0	36,580 0 0	8,324	8,312	16,636
Total for 9 weeks .	56,860	17,120 0 0	2,63,080 0	25,970 0 0	430 0 0	43,520 0 0	9,340	9,336	18,676
Comparison.									
Total for corresponding week of previous year	6,846	1,863 0 0	38,055 0	3,795 0 0	43 0 0	5,701 0 0	798	1,128	1,926
Per mile of railway corresponding week of previous year	116	32 0 0	645 0	64 0 0	1 0 0	97 0 0	...	...	...
Total to corresponding date of previous year	56,289	15,495 0 0	2,37,191 0	23,545 0 0	393 0 0	39,243 0 0	7,621	11,900	19,521

* Corrected as per revised statement furnished by Engineer-in-Chief for the half-year ending June 1902, ·18 mile of line at Fulchhari hitherto treated as siding is now being treated as main line.

MYMENSINGH-JAGANNATHGANJ RAILWAY.

Approximate Return of Traffic and Mileage for the week ended 30th August 1902 on 53·37 miles open.

	Coaching Traffic.		Merchandise and Mineral Traffic.		Other earnings (including ferry).	Total earnings.	Traffic Train-miles run.		
	No. of passengers.	Coaching receipts.	Weight carried.	Receipts.			Coaching.	Merchandise.	Total.
		Rs A. P	Mds S.	Rs. A P	Rs. A. P	Rs A P.			
Total traffic for the week .	3,690	2,060 0 0	31,400 0	1,380 0 0	40 0 0	3,480 0 0	1,280	954	2,234
Or per mile of railway	168	38 0 0	590 0	26 0 0	1 0 0	65 0 0	...	...	...
For previous 8 weeks of half-year	61,580	16,580 0 0	1,36,300 0	5,920 0 0	200 0 0	22,700 0 0	9,173	7,002	16,175
Total for 9 weeks ...	69,230	18,640 0 0	1,67,700 0	7,300 0 0	240 0 0	26,180 0 0	10,453	7,956	18,409
Comparison.									
Total for corresponding week of previous year	7,567	1,956 0 0	47,960 .	1,393 0 0	25 0 0	3,374 0 0	1,158	326	1,484
Per mile of railway corresponding week of previous year .	141	37 0 0	899 0	26 0 0		63 0 0	...	...	...
Total to corresponding date of previous year	66,807	17,534 0 0	1,33,937 0	5,217 0 0	232 0 0	24,963 0 0	9,967	6,613	16,480

DACCA STATE RAILWAY.

Approximate Return of Traffic and Mileage for the week ended 30th August 1902 on 86 miles open.

	Coaching Traffic.		Merchandise and Mineral Traffic.		Other earnings.	Total earnings.	Traffic Train-miles run.		
	No. of passengers.	Coaching receipts.	Weight carried.	Receipts.			Coaching.	Merchandise.	Total.
		Rs. A. P.	Mds. s.	Rs. A. P.	Rs. A. P.	Rs. A. P.			
Total traffic for the week ...	38,840	10,570 0 0	60,640 0	4,170 0 0	230 0 0	14,970 0 0	2,778	1,530	4,308
Or per mile of railway ...	452	123 0 0	705 0	48 0 0	3 0 0	174 0 0	...	...	...
For previous 8 weeks of half-year	200,120	55,630 0 0	1,55,350 0	13,050 0 0	1,660 0 0	70,340 0 0	22,182	12,122	34,304
Total for 9 weeks ...	238,960	66,200 0 0	2,15,990 0	17,220 0 0	1,910 0 0	85,330 0 0	24,960	13,652	38,612
Comparison.									
Total for corresponding week of previous year	32,859	7,680 0 0	82,183 0	5,836 0 0	544 0 0	13,460 0 0	2,866	1,618	4,484
Per mile of railway corresponding week of previous year .	366	82 0 0	956 0	68 0 0	6 0 0	156 0 0	...	...	...
Total to corresponding date of previous year	214,217	62,101 0 0	2,95,770 0	25,206 0 0	5,249 0 0	92,556 0 0	25,616	16,790	42,406

COOCH BEHAR STATE RAILWAY.

Approximate Return of Traffic and Mileage for the week ended 30th August 1902 on 33·78 miles open.

	Coaching Traffic.		Merchandise and Mineral Traffic.		Other earnings (including ferry).	Total earnings.	Traffic Train-miles run.		
	No. of passengers.	Coaching receipts.	Weight carried.	Receipts.			Coaching.	Merchandise.	Total.
		Rs. A. P.	Mds. s.	Rs. A. P.	Rs. A. P.	Rs. A. P.			
Total traffic for the week ...	2,220	710 0 0	10,850 0	1,170 0 0	20 0 0	1,900 0 0	250	2,098*	2,348
Or per mile of railway ...	66	21 0 0	321 0	35 0 0	...	56 0 0	...	...	...
For previous 8 weeks of half-year	20,360	7,030 0 0	88,210 0	7,340 0 0	140 0 0	14,510 0 0	2,206	15,744	17,950
Total for 9 weeks ...	22,580	7,740 0 0	99,060 0	8,510 0 0	160 0 0	16,410 0 0	2,456	17,842	20,298
Comparison.									
Total for corresponding week of previous year	1,924	650 0 0	12,237 0	1,365 0 0	171 0 0	2,086 0 0	275	261	536
Per mile of railway corresponding week of previous year	57	19 0 0	362 0	38 0 0	1 0 0	58 0 0	...	...	...
Total to corresponding date of previous year	17,729	6,651 0 0	63,867 0	6,792 0 0	1,259 0 0	14,702 0 0	2,052	6,537	8,589

Ballast train-miles, 1,872.

BENGAL AND NORTH-WESTERN RAILWAY.

Approximate Return of Traffic for the week ending 30th August 1902 on 1,261 miles open.

	Coaching Traffic.		Merchandise and Mineral Traffic		Other earnings (estimated), including steam-boat.	Total earnings.	Traffic Train miles run.		
	No. of passengers.	Receipts.	Weight carried.	Receipts.			Coaching.	Merchandise.	Total.
		Rs.	Mds.	Rs.	Rs.	Rs.			
Total traffic for the week on 1,261 miles open	167,450	(a)63,170	5,06,630	(b)56,880	18,430	(a)1,37,480	40,156	(c)32,120	72,276
Or per mile of railway ...	132·70	49·30	401·76	45·11	14·61	109·02	...	...	...
For previous 7½ weeks of half-year	1,472,730	5,79,760	42,90,180	4,77,470	1,23,740	11,79,970	317,299	240,343	557,642
Total for 8½ weeks ...	1,640,180	6,41,930	47,96,800	5,34,350	1,41,170	13,17,450	357,455	272,463	629,918
Comparison.									
Total for corresponding week of previous year on 1,251 miles open	188,553	76,682	8,46,153	60,781	16,427	1,53,890	34,558	(d)28,465	63,023
Per mile of railway corresponding week of previous year ...	150·72	61·29	676·38	48·59	13·13	123·01	...	...	...
Total to corresponding date of previous year	1,624,089	6,19,672	83,06,417	5,67,412	1,40,443	13,36,527	303,836	258,059	561,895

(a) Decrease due to Ajodhya *méla* held in the corresponding week of the previous year. It was held on the 16th August this year.
(b) The weight and amount of ballast trains included in this week were mds. 80,000 and Rs. 2,560, against mds. 443,837 and Rs. 13,575 in the corresponding week of the previous year. The decrease in goods earnings is on ballast trains, though there are small increases in public traffic and under railway materials.
(c) Includes 7,216 miles of ballast trains run on open line.
(d) ,, 7,088 ,, ,, ,,

ASSAM-BENGAL RAILWAY.

Approximate Return of Traffic for the week ended 30th August 1902 on 538 miles open for all descriptions of traffic, and an additional 81 miles for goods and parcels traffic only.

	Coaching Traffic.		Merchandise and Mineral Traffic.		Other earnings	Total earnings.	Traffic Train-miles run.		
	No. of passengers.	Coaching receipts.	Weight carried.	Receipts.			Coaching.	Merchandise.	Total.
		Rs. A. P.	Mds. s.	Rs. A. P.	Rs. A. P.	Rs. A. P.			
Total traffic for the week ...	25,519	14,405 0 0	1,78,944 0	18,694 0 0	1,751 0 0	31,350 0 0	6,537	8,152	14,679
Or per mile of railway	46·73	25·82	303·81	26·05	2·97	55·44	11·70	15·84	25·54
For previous 8 weeks of half-year	217,591	1,28,346 0 0	12,42,455 0	1,16,026 0 0	9,921 0 0	2,54,293 0 0	50,008	62,271	112,279
Total for 9 weeks ...	243,110	1,42,751 0 0	14,21,399 0	1,31,720 0 0	11,672 0 0	2,85,143 0 0	56,535	70,423	126,958
Comparison.									
Total for corresponding week of previous year	24,241	12,933 0 0	1,06,493 0	18,143 0 0	3,207 0 0	34,283 0 0	6,100	6,168	12,268
Per mile of railway corresponding week of previous year ...	43·44	23·18	184·24	31·39	5·55	60·12	10·93	10·67	21·60
Total to corresponding date of previous year	2,31,730	1,37,416 0 0	9,77,705 0	1,48,782 0 0	13,135 0 0	2,99,333 0 0	57,094	53,721	110,815

FINANCIAL YEAR.

Approximate Statement of Gross Receipts of the Assam-Bengal Railway.

Receipts for week ending 30th August 1902.			Receipts for week ending 31st August 1901.			Total receipts from 1st April 1902 to 30th August 1902.			Total receipts from 1st April 1901 to 31st August 1901.			Total increase in 1902.	Total decrease in 1902.
Mean mileage worked.	Receipts.	Per mile worked.	Mean mileage worked.	Receipts.	Per mile worked.	Mean mileage worked.	Total receipts.	Per mile worked.	Mean mileage worked.	Total receipts.	Per mile worked.		
	Rs.	Rs.		Rs.	Rs.		Rs.			Rs.		Rs.	Rs.
538	31,350	55·44	578	34,283	60·12	539	7,41,116	...	578	8,10,131	...	.....	79,015

SEGOWLIE-RAKSAUL BRANCH RAILWAY.

(Worked by the B. & N.-W. Railway.)

Approximate Return of Traffic for the week ending 6th September 1902 on 18 miles open.

	Coaching Traffic.		Merchandise and Mineral Traffic.		Other earnings (estimated).	Total earnings.	Traffic Train-miles run.		
	Passengers carried.	Receipts.	Weight carried.	Receipts.			Coaching.	Merchandise.	Total.
	No.	Rs.	Mds.	Rs.	Rs.	Rs.			
Total traffic for the week on 18 miles open	1,898	249	12,417	559	6	814	407	97	504
Or per mile of railway	101·56	13·83	689·83	31·06	0·33	45·22	.....	.....	.....
For previous 8½ weeks of half-year	11,778	1,535	65,857	1,856	61	3,454	2,926	816	3,642
Total for 9½ weeks ...	13,606	1,784	77,954	2,117	67	3,968	3,333	913	4,146
Comparison.									
Total for corresponding week of previous year on 18 miles open	2,862	339	7,169	183	10	532	427	77	504
Per mile of corresponding week of previous year	159·00	23·17	398·28	10·16	0·57	32 90	.....	.....	.....
Total to corresponding date of previous year	24,015	3,488	72,721	2,103	106	5,696	4,173	831	5,004

BENGAL CENTRAL RAILWAY COMPANY, LIMITED.

Approximate Return of Traffic and Mileage for the week ended 6th September 1902 on 139 miles open.

	Coaching Traffic.		Merchandise and Mineral Traffic.		Other earnings.	Total earnings.	Traffic Train-miles run.		
	Number of passengers.	Coaching receipts.	Weight carried.	Receipts.			Coaching.	Merchandise.	Total.
		Rs. A. P.	Mds. s.	Rs. A. P.	Rs. A. P.	Rs. A. P.			
Total traffic for the week	44,542	13,617 0 0	1,56,603 0	20,300 0 0	50 0 0	33,967 0 0	3,354	5,589	8,943
Or per mile of railway	343	105 0 0†	1,141 0	146 0 0	231 0 0	... ...	... ...	... ...	... ...
For previous 9 weeks of half-year	299,646	1,19,658 0 0	5,79,052 0	65,577 0 0	1,593 0 0	1,86,828 0 0	29,953	26,937	56,890
Total for 10 weeks ...	344,188	1,33,275 0 0	7,37,655 0	85,877 0 0	1,643 0 0	2,20,795 0 0	33,307	32,526	65,833
Comparison.									
Total for corresponding week of previous year	40,067	11,908 0 0	1,45,956 0	20,721 0 0	141 0 0	32,770 0 0	2,939	6,864	9,803
Per mile of railway corresponding week of previous year ...	308	92 0 0	1,050 0	140 0 0	1 0 0	242 0 0	.....	.....	.....
Total to corresponding date of previous year ...	353,809	1,28,921 0 0	11,03,063 0	1,28,631 0 0	32,901 0 0	2,90,453 0 0	30,777	46,325	77,102

* Audited up to week ending 19th July 1902.
† Coaching traffic calculated on 130 miles only.

DARJEELING-HIMALAYAN RAILWAY COMPANY, LIMITED.

		Rs. A. P.	Rs. A. P.
Approximate earnings for the week ending 6th Sept. 1902 ...	Coaching ...	4,858 0 0	
	Goods ...	11,165 0 0	16,086 0 0
	Other earnings ...	63 0 0	
Audited earnings for the corresponding period of 1901 ...	Coaching ...	6,381 0 0	
	Goods ...	9,329 0 0	15,783 0 0
	Other earnings ...	73 0 0	
	Increase ...		303 0 0
Receipts per mile for the week ending 6th Sept. 1902			315 6 7
Ditto for the corresponding period of 1901			309 7 6
	Increase ...		5 15 1
Receipts from 1st July to 6th Sept. 1902			1,31,062 0 0
Ditto for the corresponding period of 1901			1,37,971 0 0
	Decrease ...		6,909 0 0

Printed at the Printing Office, and published by the Book Depôt, of the Bengal Secretariat, Writers' Buildings, in the City of Calcutta, on 17th September 1902.

REGISTERED No. 0209.]

No. 39 of 1902.

The Calcutta Gazette.

WEDNESDAY, SEPTEMBER 24, 1902.

CONTENTS.

	Page
PART I.—Orders and Notifications by the Lieutenant-Governor of Bengal, the High Court, Government Treasury, &c.	1301—1351
PART IA.—Orders and Notifications by the Government of India	157
PART IB.—Orders by the Lieutenant-Governor of Bengal	181—186
PART II.—Advertisements	1175—1216
PART III.—Acts of the Bengal Council	Nil
PART IV.—Bills of the Bengal Council	Nil
PART IVA.—Proceedings of the Bengal Legislative Council	Nil
PART V.—Acts of the Governor-General's Council assented to by the Governor-General	Nil
PART VI.—Bills introduced into the Council of the Governor-General for making Laws and Regulations or published under Rule 33	Nil
APPENDIX.—Marine Notifications	353—360
SUPPLEMENT No. 30:—	
Extract from the Annual Report on the Government Cinchona Plantation and Factory in Bengal for the year 1901-1902	1359
Statistical Return of Crops, Prices Current, Circular and Eastern Canal, Meteorological Observation, Railway Traffic Receipts, &c., &c.	1363—1383

PART I

Orders and Notifications by the Lieutenant-Governor of Bengal, the High Court, Government Treasury, &c.

ORDERS BY THE LIEUT.-GOVERNOR OF BENGAL.

No. 4079A.

APPOINTMENTS AND TRANSFERS.

GENERAL.—*No. 2649A.D.—The 17th September 1902.*—Mr. A. Goodeve, Officiating District and Sessions Judge, Birbhum, is appointed to act, in addition to his own duties, as Additional Sessions Judge of Murshidabad, during the ensuing Civil Court vacation. He is authorised, under section 193 of the Code of Criminal Procedure, to receive and dispose of all criminal applications and cases during the absence, on vacation leave, of Mr. J. E. Webster.

Birbhum. Murshidabad.

No. 2653A.D.—The 17th September 1902.—Mr. A. W Warde-Jones, Deputy Magistrate and Deputy Collector, Purnea, is appointed temporarily to have charge of the Kishanganj subdivision of that district.

Purnea.

No. 2655A.D.—The 17th September 1902.—Babu Dwarka Nath Mitter, Officiating District and Sessions Judge, Dacca, is appointed to act as District and Sessions Judge of Noakhali, during the absence, on deputation, of Mr. C. W. E. Pittar, or until further orders.

Dacca. Noakhali.

No. 2657A.D.—The 17th September 1902.—Mr. B. V. Nicholl, Officiating District and Sessions Judge of Mymensingh, is appointed to be District and Sessions Judge of Dacca.

Mymensingh. Dacca.

No 2659A.D.—The 17th September 1902.—Mr. W Teunon, District and Sessions Judge, Murshidabad, on leave, is appointed to be District and Sessions Judge of Mymensingh.

Murshidabad. Mymensingh.

No. 2668A.D.—The 17th September 1902.—The services of Mr. Jnanendranath Gupta, Officiating Magistrate and Collector, Malda, are placed temporarily at the disposal of the Government of India in the Home Department.

Malda.

No. 2674A.D.—The 17th September 1902.—Mr. Brajendra Nath De, Magistrate and Collector, Bankura, is appointed to be Magistrate and Collector of Malda.

Bankura. Malda.

No. 2676A.D.—The 17th September 1902.—Mr. L. S. S. O'Malley, Officiating Joint-Magistrate and Deputy Collector, Bankura, is appointed to act temporarily as Magistrate and Collector of that district.

Bankura.

No. 2684A.D.—The 17th September 1902.—Mr. B. V. Nicholl, Officiating District and Sessions Judge, Mymensingh, is appointed to act, in addition to his own duties, as Additional Sessions Judge of Dacca, during the ensuing Civil Court vacation. He is authorised, under section 193 of the Code of Criminal Procedure, to receive and dispose of all criminal applications and cases during the absence, on vacation leave, of Babu Dwarka Nath Mitter.

Mymensingh. Dacca.

No. 2686A.D.—The 18th September 1902.—The Urdu and Hindi Translator to Government and the Bengali Translator to Government are appointed *ex-officio* to be members of the Central Examination Committee for conducting the half-yearly departmental examination of Assistant Magistrates and others.

Calcutta.

No. 2831A.D.—The 19th September 1902.—Mr. W. B. Brown, Officiating District and Sessions Judge, Patna, is appointed to act, in addition to his own duties, as Additional Sessions Judge of Saran, during the ensuing Civil Court vacation. He is authorised, under section 193 of the Code of Criminal Procedure, to receive and dispose of all criminal applications and cases during the absence, on vacation leave, of Mr G. Gordon.

Patna. Saran.

No. 2835A.D.—The 19th September 1902.—Mr. D. H. Kingsford, Officiating District and Sessions Judge, Bhagalpur, is appointed to act, in addition to his own duties, as Additional Sessions Judge of Rajshahi, during the ensuing Civil Court vacation. Mr. Kingsford is authorised, under section 193 of the Code of Criminal Procedure, to receive and dispose of all criminal applications and cases during the absence, on vacation leave, of Mr. Syud Nurul Huda.

Bhagalpur. Rajshahi.

No. 2857A.D.—The 22nd September 1902.—Mr. Jnanendra Nath Roy, Assistant Magistrate and Collector, Kurigaon, Rangpur, is appointed to act, until further orders, in the first grade of Joint-Magistrates and Deputy Collectors, with effect from the date on which he may be relieved of his present appointment as Officiating Magistrate and Collector of Dinajpur.

Rangpur. Dinajpur.

No. 2863A.D.—The 22nd September 1902.—Mr. Kedar Nath Roy, Officiating District and Sessions Judge, Bankura, is appointed to act as District and Sessions Judge of Rangpur, during the absence, on deputation, of Mr. T. W. Richardson, or until further orders.

Bankura. Rangpur.

No. 2865A.D.—The 22nd September 1902.—Mr. Ambica Charan Sen, Officiating District and Sessions Judge, Rangpur, is appointed to be District and Sessions Judge of Bankura.

Rangpur. Bankura.

POLICE.—*No. 2855A.D.—The 22nd September 1902.*—Mr. C. W. T. Feilman, Probationary Assistant Superintendent of Police, Midnapore, held charge of the police of that district from the 22nd August to the 11th September 1902.

Midnapore.

EDUCATION.—*No. 2837A.D.—The 18th September 1902.*—Mr. Dwija Das Dutta, M.A., Principal of the Chittagong College, is appointed to act temporarily as Agricultural Lecturer in the Civil Engineering College, Sibpur.

Chittagong. Howrah.

LEAVE.

GENERAL.—*No. 2643A.D.—The 17th September 1902.*—Mr. Rowland Nogendra Lal Chandra, Deputy Magistrate and Deputy Collector and Officiating Personal Assistant to the Director of Land Records and Agriculture, Bengal, is allowed leave for six weeks, under article 291 of the Civil Service Regulations, with effect from the 18th October 1902.

Calcutta.

No. 2651A.D.—The 17th September 1902.—Mr. J. Byrne, Officiating Joint-Magistrate and Deputy Collector, Kishanganj, Purnea, is allowed leave for twenty-eight days, under article 291 of the Civil Service Regulations, with effect from the 20th October 1902, or any subsequent date on which he may be relieved.

Purnea.

No. 2857A.D.—The 22nd September 1902.—Mr. Jnanendra Nath Roy, Officiating Joint-Magistrate and Deputy Collector, Kurigaon, Rangpur, is allowed leave for six weeks, under article 291 of the Civil Service Regulations, with effect from the date on which he may be relieved of his present appointment as Officiating Magistrate and Collector of Dinajpur.

Rangpur. Dinajpur.

POLICE.—*No. 2853A.D.—The 22nd September 1902.*—Mr. F. Roddis, Officiating District Superintendent of Police, Midnapore, was on leave from the 22nd August to the 11th September 1902, under article 291 of the Civil Service Regulations.

Midnapore.

POWERS.

GENERAL.—*No. 2844A.D.—The 20th September 1902.*—Babu Purna Chandra Maulik, Deputy Collector, Noakhali, is vested with the powers of a Collector under Act I of 1894 in that district.

Noakhali.

C. E. BUCKLAND,
Chief Secy. to the Govt. of Bengal.

FINANCIAL DEPARTMENT.

NOTIFICATION.

No. 1614T.F.—The 19th September 1902.—In exercise of the power conferred on him by section 30 of the Indian Salt Act, XII of 1882, the Lieutenant-Governor is pleased to vest Mr. T. C. Beale with the powers of an Assistant Commissioner under that Act in the districts of the 24-Parganas, Midnapore, and Khulna, during the absence, on leave, of Mr. S. G L. Platts, or until further orders.

24-Parganas. Midnapore. Khulna.

E. W. COLLIN,
Offg. Secy. to the Govt. of Bengal.

MEDICAL DEPARTMENT.

No. 1838T.M.—The 18th September 1902.—Captain H. B. Meakin, I.M.S., Officiating Second Surgeon, Presidency General Hospital, Calcutta, is appointed, with effect from the forenoon of the 25th August 1902, to act as First Surgeon of that institution during the absence, on deputation, of Captain B. C. Oldham, I M S, or until further orders.

Calcutta.

No. 1840T.M.—The 18th September 1902.—Captain J. C. H. Leicester, I.M.S., is appointed, with effect from the forenoon of the 25th August 1902, to act as Second Surgeon, Presidency General Hospital, Calcutta, during the absence, on deputation, of Captain L Rogers, I.M S., or until further orders.

Calcutta.

No. 1871T.M.—The 20th September 1902.—The services of Assistant Surgeon Uma Churn Roy of the Bengal establishment are placed at the disposal of the Hon'ble the Chief Commissioner of the Central Provinces, with effect from the 23rd August 1902.

E. W. COLLIN,
Offg. Secy. to the Govt. of Bengal.

NOTIFICATION.

No. 698T.P.—The 15th September 1902.—The following notifications, issued by the Government of the Punjab, prohibiting pilgrimage to the Solar Eclipse Fair at Thánesar, in the Karnal district, is republished for general information.

Karnal.

E. W. COLLIN,
Offg. Secy. to the Govt. of Bengal.

No. 1335L.P., dated Lahore, the 6th September 1902.

NOTIFICATION—By the Government of the Punjab.

UNDER the provisions of the Epidemic Diseases Act, 1897, the Hon'ble the Lieutenant-Governor, being satisfied that a dangerous epidemic, viz. bubonic plague, is widely prevalent in the Punjab, and that the ordinary provisions of the law are insufficient to prevent its spread, is pleased to prohibit the sale of tickets on all dates from the 20th October 1902 to the 1st of November 1902, inclusive, at any railway station in the Punjab, to all persons proceeding to, or believed to be proceeding to, the Kurukshetra Sun Eclipse Fair near Thánesar, in the Karnal district.

No. 1337L.P., dated Lahore, the 6th September 1902.

NOTIFICATION—By the Government of the Punjab.

UNDER Clause V of the Regulations published with Punjab Government Notification No. 1356, dated the 10th of November 1897, the Hon'ble the Lieutenant-Governor is pleased to prohibit all persons from travelling from, or by way of, any place in the Punjab

to the neighbourhood of Thánesar, in the Thánesar tahsil of the Karnal district from the 20th of October 1902 to the 1st November 1902, both days inclusive, during which period the Sun Eclipse Fair would ordinarily be in progress.

No. 1338L.P., dated Lahore, the 6th September 1902.

NOTIFICATION—By the Government of the Punjab.

UNDER Clause V of the Regulations published with Punjab Government Notification No. 1356, dated the 10th of November 1897, the Hon'ble the Lieutenant-Governor is pleased to prohibit all persons from travelling to, or to the neighbourhood of Thánesar, in tahsil Thánesar of the Karnal district, at the time of the Sun Eclipse Fair, which would in ordinary course be held at that place on the 31st October 1902.

ERRATUM.

No. 1790T.M.—The 15th September 1902.—In the Notification No. 2329Medl., dated the 16th August 1902, appointing Assistant Surgeon Satya Saran Chakravarti to act as House Surgeon, Howrah General Hospital, during the absence, on leave, of Military Assistant Surgeon W. Clarke, *for* "Satya Saran Chakravarti" *read* "Satya Saran Mitra."

E. W. COLLIN,

Offg. Secy. to the Govt. of Bengal.

JUDICIAL DEPARTMENT.

No. 4080A.

APPOINTMENTS AND TRANSFERS.

No. 2697A.D.—The 18th September 1902.—Babu Purna Chunder Sircar, Munsif of Vishnupur, in the district of Bankura, is appointed to be a Munsif in the district of Purnea, to be ordinarily stationed at Kishanganj, and is vested with the powers of a Judge of a Court of Small Causes for the trial of suits cognizable by such a Court up to the value of Rs. 100, within the local limits of the Kishanganj Munsifi.

Bankura.
Purnea.

No. 2699A.D.—The 18th September 1902.—Babu Upendra Chandra Mukerjee, Munsif of Kishanganj, in the district of Purnea, is appointed to be a Munsif in the district of Bankura, to be ordinarily stationed at Vishnupur, and is vested with the powers of a Judge of a Court of Small Causes for the trial of suits cognizable by such a Court up to the value of Rs. 100, and with the functions of a District Court under section 26, sub-section (1), of Act VII of 1889, within the local limits of the Vishnupur Munsifi. He is also vested with powers to exercise final jurisdiction in the trial of suits for the recovery of rent under section 153 (*b*) of the Bengal Tenancy Act, VIII of 1885.

Purnea.
Bankura.

No. 2701A.D.—The 18th September 1902.—Babu Bhagavati Charan Mitra, Munsif of Begusarai, in the district of Bhagalpur, is appointed to be a Munsif in the district of the 24-Parganas, to be ordinarily stationed at Diamond Harbour.

Bhagalpur.
24-Parganas.

No. 2703A D.—The 18th September 1902.—Mr. Mahmud Hasan, Additional Munsif of Madhipura and Begusarai, in the district of Bhagalpur, is appointed to be a Munsif in the same district, to be ordinarily stationed at Begusarai, and is vested with the powers of a Judge of a Court of Small Causes for the trial of suits cognizable by such a Court up to the value of Rs. 100, and with the functions of a District Court, under section 26, sub-section (1), of Act VII of 1889, within the local limits of the Begusarai Munsifi.

Bhagalpur.

No. 2705A.D.—The 18th September 1902.—Babu Jotindra Mohan Bagchi, Munsif of Diamond Harbour, in the district of the 24-Parganas, is appointed to be an Additional Munsif in the district of Bhagalpur, to be ordinarily stationed at Madhipura and Begusarai, but to be on deputation to Begusarai.

24-Parganas.
Bhagalpur.

No. 2707A D.—The 18th September 1902.—Babu Atul Chandra Batabyal, Munsif of Dubrajpur, in the district of Birbhum, is appointed to be a Munsif in the district of Noakhali, to be ordinarily stationed at Lakhmipur, and is vested with the powers of a Judge of a Court of Small Causes for the trial of suits cognizable by such a Court up to the value of Rs. 100, and with the functions of a District Court, under section 26, sub-section (1), of Act VII of 1889, within the local limits of the Lakhmipur Munsifi.

Birbhum.
Noakhali.

No. 2709 A.D.—The 18th September 1902.—Babu Brajes Chandra Sinha, Munsif of Lakhmipur, in the district of Noakhali, is appointed to be a Munsif in the district of Birbhum, to be ordinarily stationed at Dubrajpur, and is vested with the powers of a Judge of a Court of Small Causes for the trial of suits cognizable by such a Court up to the value af Rs. 100, and with the functions of a District Court, under section 26, sub-section (1), of Act VII of 1889, within the local limits of the Dubrajpur Munsifi.

Noakhali.
Birbhum.

No. 2711 A.D. - The 18th September 1902.—Babu Kanty Chunder Mukerji, Munsif of Purulia and Chaibassa, in Chota Nagpur, is appointed to be a Munsif in the district of Jessore, to be ordinarily stationed at Bagerhat, and is vested with the powers of a Judge of a Court of Small Causes for the trial of suits cognizable by such a Court up to the value of Rs. 100, and with the functions of a District Court, under section 26, sub-section (1), of Act VII of 1889, within the local limits of the Bagerhat Munsifi.

Chota Nagpur.
Jessore.

No. 2713 A.D.—The 18th September 1902.—Babu Umesh Chandra Sen (II), Munsif of Bagerhat, in the district of Jessore, is appointed to be a Munsif in the same district, to be ordinarily stationed at Khulna, and is vested with the powers of a Judge of a Court of Small Causes for the trial of suits cognizable by such a Court up to the value of Rs. 100, within the local limits of the Khulna Munsifi. He is also vested with powers to exercise final jurisdiction in the trial of suits for the recovery of rent under section 153 (*b*) of the Bengal Tenancy Act, VIII of 1885.

Jessore.

No. 2715 A.D.—The 18th September 1902.—Babu Sasibhusan Sen (I), Munsif of Khulna, in the district of Jessore, is appointed to be an Additional Munsif in Chota Nagpur, to be ordinarily stationed at Purulia and Chaibassa, and is vested with the powers of a Judge of a Court of Small Causes for the trial of suits cognizable by such a Court up to the value of Rs. 100, within the local limits of the Purulia and Chaibassa Munsifis.

Jessore.
Chota Nagpur.

No. 2717 A.D.—The 18th September 1902.—Mr. Iradatulla, Munsif of Satkania, in the district of Chittagong, is appointed to be a Munsif in the district of Mymensingh, to be ordinarily stationed at Atia, and is vested with the powers of a Judge of a Court of Small Causes for the trial of suits cognizable by such a Court up to the value of Rs. 100, and with the functions of a District Court, under section 26, sub-section (1), of Act VII of 1889, within the local limits of the Atia Munsifi. He is also vested with the powers conferred on District Judges under sections 344 to 359 (both inclusive) of the Code of Civil Procedure in cases where the amount of debts owing by the insolvents does not exceed Rs. 1,000, arising within the local limits of the Atia Munsifi.

Chittagong.
Mymensingh.

No. 2719 A.D.—The 18th September 1902.—Babu Kedar Nath Chaudhuri, Munsif of Atia, in the district of Mymensingh, is appointed to be a Munsif in the district of Chittagong, to be ordinarily stationed at Satkania.

Mymensingh.
Chittagong.

No. 2721 A.D.—The 18th September 1902.—Babu Shyama Charan Banerjee, Munsif of Satkania, in the district of Chittagong, is appointed to be an Additional Munsif in the district of the 24-Parganas, but to be on deputation to Alipore.

Chittagong.
24-Parganas.

No. 2723 A.D.—The 18th September 1902.—Babu Bijoy Gopal Basu, Additional Munsif in the district of the 24-Parganas, is appointed to be a Munsif in the district of Chittagong, to be ordinarily stationed at Satkania, and is vested with the powers of a Judge of a Court of Small Causes for the trial of suits cognizable by such a Court up to the value of Rs. 100, and with the functions of a District Court, under section 26, sub-section (1), of Act VII of 1889, within the local limits of the Satkania Munsifi.

24-Parganas.
Chittagong.

No. 2725 A.D.—The 18th September 1902.—Babu Kally Das Mukerjee, Munsif of Hathhazari, in the district of Chittagong, is appointed to be a Munsif in the district of Hooghly, to be ordinarily stationed at Serampore.

Chittagong.
Hooghly.

No. 2727 A.D.—The 18th September 1902.—Babu Gopal Chandra Banerjee, Munsif of Serampore, in the district of Hooghly, who is now officiating as Subordinate Judge, Monghyr, is appointed to be a Munsif in the district of Chittagong, to be ordinarily stationed at Hathhazari, but to continue to act in his present appointment at Monghyr until further orders.

Hooghly.
Chittagong.
Monghyr.

No. 2729 A.D.—The 18th September 1902.—Babu Asutosh Sarkar, Munsif of Balasore, in the district of Cuttack, is appointed to be a Munsif in the district of Faridpur, to be ordinarily stationed at Goalundo, and is vested with the powers of a Judge of a Court of Small Causes for the trial of suits cognizable by such a Court up to the value of Rs. 100, and with the functions of a District Court, under section 26, sub-section (1), of Act VII of 1889, within the local limits of the Goalundo Munsifi.

Cuttack.
Faridpur.

No. 2731 A.D.—The 18th September 1902.—Babu Purno Chandra Bose, Munsif of Goalundo, in the district of Faridpur, is appointed to be a Munsif in the district of Noakhali, to be ordinarily stationed at Fenny.

Faridpur
Noakhali.

No. 2733A.D.—The 18th September 1902.—Babu Ashutosh Gupta, Munsif of Fenny, in the district of Noakhali, is appointed to be a Munsif in the district of Dacca, to be ordinarily stationed at Munshiganj, and is vested with the powers of a Judge of a Court of Small Causes for the trial of suits cognizable by such a Court up to the value of Rs. 100, and with the functions of a District Court under section 26, sub-section (1), of Act VII of 1889, and with the powers conferred on District Judges under sections 344 to 359 (both inclusive) of the Code of Civil Procedure in regard to cases where the amount of debts owing by the insolvents does not exceed Rs. 1,000, arising within the local limits of the Munshiganj Munsifi.

Noakhali.
Dacca.

No. 2735A.D.—The 18th September 1902.—Babu Annada Charan Sen, Munsif of Munshiganj, in the district of Dacca, is appointed to be a Munsif in the district of Cuttack, to be ordinarily stationed at Balasore, and is vested with the powers of a Judge of a Court of Small Causes for the trial of suits cognizable by such a Court up to the value of Rs. 100, and with the functions of a District Court under section 26, sub-section (1), of Act VII of 1889, and also with the powers of a Court under section 3, clause (*d*), of the Land Acquisition Act, I of 1894, within the local limits of the Balasore Munsifi.

Dacca.
Cuttack.

No. 2737A.D.—The 18th September 1902.—Babu Asutosh Banerji (II), Munsif of Puri, in the district of Cuttack, is appointed to be Munsif in the district of Jessore, to be ordinarily stationed at the Sadar station, and is vested with the powers of a Judge of a Court of Small Causes for the trial of suits cognizable by such a Court up to the value of Rs. 100, within the local limits of the Sadar Munsifi of Jessore.

Cuttack.
Jessore.

No. 2739A.D.—The 18th September 1902.—Babu Sarat Chandra Rai, Munsif of Jessore, is appointed to be a Munsif in the district of Cuttack, to be ordinarily stationed at Puri, and is vested with the powers of a Judge of a Court of Small Causes for the trial of suits cognizable by such a Court up to the value of Rs. 100, and with the functions of a District Court under section 26, sub-section (1), of Act VII of 1889, and with the functions of a Court under section 3, clause (*d*), of the Land Acquisition Act, I of 1894, within the local limits of the Puri Munsifi.

Jessore.
Cuttack.

No 2741A.D.—The 18th September 1902.—Babu Achinta Nath Mitter, Munsif of Bhanga, in the district of Faridpur, is appointed to be a Munsif in the district of Tirhut, to be ordinarily stationed at Sitamarhi, and is vested with the powers of a Judge of a Court of Small Causes for the trial of suits cognizable by such a Court up to the value of Rs. 100, within the local limits of the Sitamarhi Munsifi. He is also vested with powers to exercise final jurisdiction in the trial of suits for the recovery of rent under section 153 (*b*) of the Bengal Tenancy Act, VIII of 1885.

Faridpur.
Tirhut.

No. 2743A.D.—The 18th September 1902.—Babu Probha Chandra Singha, Munsif of Sitamarhi, in the district of Tirhut, is appointed to be a Munsif in the district of Faridpur, to be ordinarily stationed at Bhanga, and is vested with the powers of a Judge of a Court of Small Causes for the trial of suits cognizable by such a Court up to the value of Rs. 100, and with the functions of a District Court, under section 26, sub-section (1), of Act VII of 1889, within the local limits of the Bhanga Munsifi.

Tirhut.
Faridpur.

No. 2745A.D.—The 18th September 1902.—Babu Bipin Chandra Chatterjee, Munsif of Jessore, is appointed to be a Munsif in the district of Tippera, to be ordinarily stationed at Comilla.

Jessore.
Tippera.

No. 2747A D.—The 18th September 1902.—Babu Poresh Nath Roy Chowdhury, Munsif of Comilla, in the district of Tippera, is appointed to be a Munsif in the district of Jessore, to be ordinarily stationed at the Sadar station, and is vested with the powers of a Judge of a Court of Small Causes for the trial of suits cognizable by such a Court up to the value of Rs. 50, within the local limits of the Sadar Munsifi of Jessore.

Tippera.
Jessore.

No. 2749A.D.—The 18th September 1902.—Babu Sarat Chandra Bose, Munsif of Narail, in the district of Jessore, is appointed to be a Munsif in the district of Saran, to be ordinarily stationed at Siwan, and is vested with the powers of a Judge of a Court of Small Causes for the trial of suits cognizable by such a Court up to the value of Rs. 100, and with the functions of a District Court, under section 26, sub-section (1), of Act VII of 1889, within the local limits of the Siwan Munsifi. He is also vested with powers to exercise final jurisdiction in the trial of suits for the recovery of rent under section 153 (*b*) of the Bengal Tenancy Act, VIII of 1885.

Jessore.
Saran.

No. 2751A.D.—The 18th September 1902.—Babu Pankaja Kumar Chattopadhyaya, Munsif of Siwan, in the district of Saran, is appointed to be a Munsif in the district of Jessore, to be ordinarily stationed at Narail, and is vested with the powers of a Judge of a Court of Small Causes for the trial of suits cognizable by such a Court up to the value of Rs. 100, within the local limits of the Narail Munsifi.

Saran.
Jessore.

No. 2753A.D.—The 18th September 1902.—Babu Hari Das Bose, Munsif of Sandip, in the district of Noakhali, is appointed to be a Munsif in the district of Patna, to be ordinarily stationed at Bihar, and is vested with the powers of a Judge of a Court of Small Causes for the trial of suits cognizable by such a Court up to the value of Rs. 100, within the local limits of the Bihar Munsifi.

Noakhali.
Patna.

No. 2755A.D.—The 18th September 1902—Babu Atul Chunder Ghose, Munsif of Bihar, in the district of Patna, is appointed to be a Munsif in the district of Noakhali, to be ordinarily stationed at Sandip, and is vested with the powers of a Judge of a Court of Small Causes for the trial of suits cognizable by such a Court up to the value of Rs. 100, and with the functions of a District Court, under section 26, sub-section (1), of Act VII of 1889, within the local limits of the Sandip Munsifi.

Patna.
Noakhali.

No. 2757A.D.—The 18th September 1902.—Babu Durga Das Mukerjee, Munsif of Tamluk, in the district of Midnapore, is appointed to be a Munsif in the district of Tippera, to be ordinarily stationed at Nabinagar, and is vested with the powers of a Judge of a Court of Small Causes for the trial of suits cognizable by such a Court up to the value of Rs. 100, and with the functions of a District Court, under section 26, sub-section (1), of Act VII of 1889, within the local limits of the Nabinagar Munsifi. He is also vested with powers to exercise final jurisdiction in the trial of suits for the recovery of rent under section 153 (*b*) of the Bengal Tenancy Act, VIII of 1885.

Midnapore.
Tippera.

No. 2759A.D.—The 18th September 1902.—Babu Phani Bhusan Mookerjee, Munsif of Nabinagar, in the district of Tippera, is appointed to be a Munsif in the district of Midnapore, to be ordinarily stationed at Tamluk, and is vested with the powers of a Judge of a Court of Small Causes for the trial of suits cognizable by such a Court up to the value of Rs. 100, within the local limits of the Tamluk Munsifi.

Tippera.
Midnapore.

No. 2761A D.—The 18th September 1902.—Babu Asutosh Ghose, Munsif of Ghatal, in the district of Midnapore, is appointed to be a Munsif in the district of Backergunge, to be ordinarily stationed at Barisal.

Midnapore.
Backergunge.

No. 2763A.D.—The 18th September 1902.—Babu Norendra Nath Ghose, Munsif of Barisal, in the district of Backergunge, is appointed to be a Munsif in the district of Midnapore, to be ordinarily stationed at Ghatal, and is vested with the powers of a Judge of a Court of Small Causes for the trial of suits cognizable by such a Court up to the value of Rs. 100, within the local limits of the Ghatal Munsifi.

Backergunge.
Midnapore.

No. 2765A.D.—The 18th September 1902.—Babu Nistarun Banerji, Munsif of Mymensingh, is appointed to be a Munsif in the district of the 24-Parganas, to be ordinarily stationed at Sealdah, and is vested with the powers of a Judge of a Court of Small Causes for the trial of suits cognizable by such a Court up to the value of Rs. 100, within the local limits of that portion of the Sealdah Munsifi which lies outside the limits of the jurisdiction of the Small Cause Court proper at Sealdah. He is also vested with powers under section 19 (2) of the Bengal, North-Western Provinces and Assam Civil Courts Act, XII of 1887, to try, under the ordinary procedure, original suits up to the value of Rs. 2,000, and with powers conferred on District Judges under sections 344 to 359 (both inclusive) of the Code of Civil Procedure in cases where the amount of debts owing by the insolvents does not exceed Rs. 1,000, and with the functions of a District Court, under section 26, sub-section (1), of Act VII of 1889, within the local limits of the Sealdah Munsifi.

Mymensingh.
24-Parganas.

No. 2767A.D.—The 18th September 1902.—Babu Kali Pada Mukerji, Munsif of Sealdah, in the district of the 24-Parganas, is appointed to be a Munsif in the district of Mymensingh, to be ordinarily stationed at the Sadar station, and is vested with the powers of a Judge of a Court of Small Causes for the trial of suits cognizable by such a Court up to the value of Rs. 100, and with the functions of a District Court, under section 26, sub-section (1), of Act VII of 1889, within the local limits of the Sadar Munsifi of Mymensingh. He is also vested with powers, under section 19 (2) of the Bengal, North-Western Provinces and Assam Civil Courts Act, XII of 1887, to try, under the ordinary procedure, original suits up to the value of Rs. 2,000 arising within the local limits of the original jurisdiction of the District Judge of Mymensingh.

24-Parganas.
Mymensingh.

No. 2769A.D.—The 18th September 1902.—Babu Onil Chandra Dutt, Munsif of Netrakona, in the district of Mymensingh, is appointed to be a Munsif in the district of Tippera, to be ordinarily stationed at Chandpur.

Mymensingh.
Tippera.

No. 2771A.D.—The 18th September 1902.—Babu Kali Prosonno Sen, Munsif of Chandpur, in the district of Tippera, is appointed to be a Munsif in the district of Mymensingh, to be ordinarily stationed at Netrakona, and is vested with the powers of a Judge of a Court of Small Causes for the trial of suits cognizable by such a Court up to the value of Rs. 100, and with the functions of a District Court, under section 26, sub-section (1), of Act VII of 1889, within the local

Tippera.
Mymensingh.

limits of the Netrakona Munsifi. He is also vested with the powers conferred on District Judges under sections 344 to 359 of the Code of Civil Procedure in cases where the amount of debts owing by the insolvents does not exceed Rs. 1,000 arising within the local limits of the Netrakona Munsifi.

No. 2773A.D.—The 18th September 1902.—Babu Debendra Prosad Bagchi, Munsif of Brahmanbaria, in the district of Tippera, is appointed to be a Munsif in the district of Burdwan, to be ordinarily stationed at the Sadar station, and is vested with the powers of a Judge of a Court of Small Causes for the trial of suits cognizable by such a Court up to the value of Rs. 100, and with the functions of a District Court, under section 26, sub-section (1), of Act VII of 1889, within the local limits of the Sadar Munsifi of Burdwan.

Tippera.
Burdwan.

No. 2775A.D.—The 18th September 1902.—Babu Debendra Mohun Sen, Munsif of Burdwan, is appointed to be a Munsif in the district of Pabna and Bogra, to be ordinarily stationed at Pabna, and is vested with the powers of a Judge of a Court of Small Causes for the trial of suits cognizable by such a Court up to the value of Rs. 100, within the local limits of the Pabna Munsifi.

Burdwan.
Pabna and Bogra.

No. 2777A.D.—The 18th September 1902.—Babu Khagendra Nath Bose, Munsif of Pabna, in the district of Pabna and Bogra, is appointed to be a Munsif in the district of Tippera, to be ordinarily stationed at Brahmanbaria, and is vested with the powers of a Judge of a Court of Small Causes for the trial of suits cognizable by such a Court up to the value of Rs. 100, and with the functions of a District Court, under section 26, sub-section (1), of Act VII of 1889, within the local limits of the Brahmanbaria Munsifi.

Pabna and Bogra.
Tippera.

No. 2779A.D.—The 18th September 1902.—Babu Charu Chandra Mukerjee, Munsif of Atia, in the district of Mymensingh, is appointed to be a Munsif in the district of Hooghly, to be ordinarily stationed at Serampore.

Mymensingh.
Hooghly.

No. 2781A.D.—The 18th September 1902.—Babu Uma Nath Ghosal, Munsif of Serampore, in the district of Hooghly, is appointed to be a Munsif in the district of Shahabad, to be ordinarily stationed at Arrah, and is vested with the powers of a Judge of a Court of Small Causes for the trial of suits cognizable by such a Court up to the value of Rs. 100, within the local limits of the Arrah Munsifi.

Hooghly.
Shahabad.

No. 2783A.D.—The 18th September 1902.—Babu Rajendra Lall Lahiry, Munsif of Arrah, in the district of Shahabad, on leave, is appointed to be a Munsif in the district of Mymensingh, to be ordinarily stationed at Atia.

Shahabad.
Mymensingh.

No. 2785A.D.—The 18th September 1902.—The services of Babu Nobin Chandra Nag, Munsif of Sudharam, in the district of Noakhali, are placed at the disposal of the Hon'ble the Chief Commissioner of Assam.

Noakhali.
Assam.

No 2788A.D.—The 18th September 1902.—Babu Girish Chandra Sen, Munsif, is appointed to be a Munsif in the district of Noakhali, to be ordinarily stationed at Sudharam, and is vested with the powers of a Judge of a Court of Small Causes for the trial of suits cognizable by such a Court up to the value of Rs. 100, within the local limits of the Sudharam Munsifi.

Noakhali.

No. 2790A.D.—The 18th September 1902.—Babu Jogendra Nath Basu, Munsif of Nator, in the district of Rajshahi, is appointed to be a Munsif in the district of Birbhum, to be ordinarily stationed at Bolpur, and is vested with the powers of a Judge of a Court of Small Causes for the trial of suits cognizable by such a Court up to the value of Rs. 100, and with the functions of a District Court, under section 26, sub-section (1), of Act VII of 1889, within the local limits of the Bolpur Munsifi.

Rajshahi.
Birbhum.

No. 2792A.D.—The 18th September 1902.—Babu Ganendra Nath Mukherjee, Munsif of Bolpur, in the district of Birbhum, is appointed to be a Munsif in the district of Rajshahi, to be ordinarily stationed at Nator, and is vested with the powers of a Judge of a Court of Small Causes for the trial of suits cognizable by such a Court up to the value of Rs. 100, within the local limits of the Nator Munsifi.

Birbhum.
Rajshahi.

No. 2794A.D.—The 18th September 1902.—Babu Jogendra Nath Mookerjee (I), Munsif of Malda, in the district of Rajshahi, is appointed to be a Munsif in the district of the 24-Parganas, to be ordinarily stationed at Barasat, and is vested with the powers of a Judge of a Court of Small Causes for the trial of suits cognizable by such a Court up to the value of Rs. 100, and also with the powers conferred on District Judges under sections 344 to 359 (both inclusive) of the Code of Civil Procedure, in cases where the amount of debts owing by the insolvents does not exceed Rs. 1,000, arising within the local limits of the Barasat Munsifi.

Malda.
24-Parganas.

No. 2796A.D.—The 18th September 1902.—Babu Surjo Narain Dass, Munsif of Barasat, in the district of the 24-Parganas, is appointed to be a Munsif in the district of Rajshahi, to be ordinarily stationed at Malda, and is vested with the powers of a Judge of a Court of Small Causes for the trial of suits cognizable by such a Court up to the value of Rs. 100, within the local limits of the Malda Munsifi. He is also vested, under section 19, sub-section 2, of the Bengal, North-Western Provinces and Assam Civil Courts' Act, XII of 1887, with

24-Parganas.
Rajshahi.

powers to try, under the ordinary procedure, original suits up to the value of Rs. 2,000, arising within the Malda district.

No. 2798A.D.—The 18th September 1902.—The services of Babu Bihari Lal Chatterjee (I), Munsif of Rangpur, are placed at the disposal of the Hon'ble the Chief Commissioner of Assam.

Rangpur.
Assam.

No 2801A.D.—The 18th September 1902.—Babu Sri Hari Lahiri, Munsif, is appointed to be a Munsif in the district of Shahabad, to be ordinarily stationed at Buxar, and is vested with the powers of a Judge of a Court of Small Causes for the trial of suits cognizable by such a Court up to the value of Rs. 100, within the local limits of the Buxar Munsifi.

Shahabad.

No. 2803A.D.—The 18th September 1902.—Babu Mohim Chunder Chukerbutty, Munsif of Buxar, in the district of Shahabad, is appointed to be a Munsif in the district of Tippera, to be ordinarily stationed at Comilla, and is vested with the powers of a Judge of a Court of Small Causes for the trial of suits cognizable by such a Court up to the value of Rs. 100, within the local limits of the Comilla Munsifi.

Shahabad.
Tippera.

No. 2805A.D.—The 18th September 1902.—Babu Ram Lal Das, Munsif of Comilla, in the district of Tippera, is appointed to be a Munsif in the district of Rangpur, to be ordinarily stationed at the Sadar station, and is vested with the powers of a Judge of a Court of Small Causes for the trial of suits cognizable by such a Court up to the value of Rs. 100, within the local limits of the Sadar Munsifi of Rangpur.

Tippera.
Rangpur.

No. 2807A.D.—The 18th September 1902.—Babu Lal Bihari Bhaduri, Munsif of Pingna, in the district of Mymensingh, is appointed to be a Munsif in the district of the 24-Parganas, to be ordinarily stationed at Baruipur, and is vested with the powers of a Judge of a Court of Small Causes for the trial of suits cognizable by such a Court up to the value of Rs. 100, and with the powers conferred on District Judges under sections 344 to 359 (both inclusive) of the Code of Civil Procedure, in cases where the amount of debts owing by the insolvents does not exceed Rs. 1,000, arising within the local limits of the Baruipur Munsifi.

Mymensingh.
24-Parganas.

No. 2809A.D —The 18th September 1902.—Babu Sarat Chandra Pal, Munsif of Baruipur, in the district of the 24-Parganas, is appointed to be a Munsif in the district of Mymensingh, to be ordinarily stationed at Pingna, and is vested with the powers of a Judge of a Court of Small Causes for the trial of suits cognizable by such a Court up to the value of Rs. 100, and with the functions of a District Court, under section 26, sub-section (1), of Act VII of 1889, within the local limits of the Pingna Munsifi.

24-Parganas.
Mymensingh.

No. 2811A.D.—The 18th September 1902.—Babu Jadub Chandra Bhattacharjee, Munsif, is appointed to be a Munsif in the district of Birbhum, to be ordinarily stationed at Bolpur.

Birbhum.

No. 2813A.D.—The 18th September 1902—The services of Babu Paroda Kinkur Mukerjee, Munsif of Bolpur, in the district of Birbhum, are placed at the disposal of the Hon'ble the Chief Commissioner of Assam.

Birbhum.
Assam.

No. 2816A.D.—The 18th September 1902.—Babu Sarada Prosad Sen, Munsif of Kushtia, in the district of Nadia, is appointed to be a Munsif in the district of the 24-Parganas, to be ordinarily stationed at Sealdah, and is vested with the powers of a Judge of a Court of Small Causes for the trial of suits cognizable by such a Court up to the value of Rs. 100, within the local limits of that portion of the Sealdah Munsifi which lies outside the limits of the jurisdiction of the Small Cause Court proper at Sealdah.

Nadia.
24-Parganas.

No. 2818A.D.—The 18th September 1902.—Babu Durga Das Bose, Munsif of Sealdah, in the district of the 24-Parganas, is appointed to be a Munsif in the district of Nadia, to be ordinarily stationed at Kushtia, and is vested with the powers of a Judge of a Court of Small Causes for the trial of suits cognizable by such a Court up to the value of Rs. 100, and with the functions of a District Court, under section 26, sub-section (1), of Act VII of 1889, within the local limits of the Kushtia Munsifi.

24-Parganas.
Nadia.

No. 2820A.D.—The 18th September 1902.—Babu Nilalohit Mookherjee, Munsif of Ranchi, in Chota Nagpur, is appointed to be a Munsif in the district of Nadia, to be ordinarily stationed at Chuadanga, and is vested with the powers of a Judge of a Court of Small Causes for the trial of suits cognizable by such a Court up to the value of Rs 100, and with the functions of a District Court, under section 26, sub-section (1), of Act VII of 1889, within the local limits of the Chuadanga Munsifi.

Chota Nagpur.
Nadia.

No. 2822A.D.—The 18th September 1902.—Babu Sasi Bhusan Sen (II), Munsif of Chuadanga, in the district of Nadia, is appointed to be a Munsif in Chota Nagpur, to be ordinarily stationed at Ranchi, and is vested with the powers of a Judge of a Court of Small Causes for the trial of suits cognizable by such a Court up to the value of Rs. 100, within the local limits of the Ranchi Munsifi.

Nadia.
Chota Nagpur.

No. 2824A.D.—The 18th September 1902.—Babu Upendra Nath Datta, Munsif of Chikandi, in the district of Faridpur, is appointed to be a Munsif in the district of Jessore, to be ordinarily stationed at Satkhira, and is vested with the powers of a Judge of a Court of Small Causes for the trial of suits cognizable by such a Court up to the value of Rs. 100, and with the functions of a District Court under section 26, sub-section (1), of Act VII of 1889, within the local limits of the Satkhira Munsifi.

Faridpur.
Jessore.

No. 2826A.D.—The 18th September 1902.—Babu Syama Kanta Nag, Munsif of Satkhira, in the district of Jessore, is appointed to be a Munsif in the district of Faridpur, to be ordinarily stationed at Chikandi, and is vested with the powers of a Judge of a Court of Small Causes for the trial of suits cognizable by such a Court up to the value of Rs. 100, and with the functions of a District Court under section 26, sub-section (1), of Act VII of 1889, within the local limits of the Chikandi Munsifi.

Jessore.
Faridpur.

No. 2646J.D.—The 15th September 1902.—Babu Pramatha Nath Giri is appointed to be an Honorary Magistrate of the Independent Bench at Katwa, in the district of Burdwan.

Burdwan.

No. 2627J.D.—The 16th September 1902.—Babu Obhay Churn Das is re-appointed to be an Honorary Magistrate of the Independent Bench at Narayanganj, in the district of Dacca.

Dacca.

No. 2758J.D.—The 20th September 1902.—Kazi Saiyid Muhammad Mobin is appointed to be an Honorary Magistrate of the Independent Bench at Lakhisarai, in the district of Monghyr.

Monghyr.

RESIGNATIONS.

No. 2601J.D.—The 15th September 1902.—The Lieutenant-Governor accepts the resignation tendered by Babu Lalit Chunder Moozoomdar of his appointment as an Honorary Magistrate of the Tangail Independent Bench, in the district of Mymensingh.

Mymensingh.

No. 2603J.D.—The 15th September 1902.—The Lieutenant-Governor accepts the resignation tendered by Babu Kally Churn Tarufdar of his appointment as an Honorary Magistrate of the Santipur Independent Bench, in the district of Nadia.

Nadia.

POWERS.

No. 2600A.D.—The 15th September 1902.—In exercise of the power conferred by sub-section (1) of section 565 of the Code of Criminal Procedure, 1898, the Lieutenant-Governor is pleased to empower the following Magistrate of the first class in the district of Backergunge, viz., Maulvi Mahomed Eskandar Ali, to order, at the time of passing sentence of imprisonment on any person referred to in that sub-section, that the residence or change of residence of such person after release shall be notified as provided by the rules made under sub-section (3) of the said section.

Backergunge.

Maulvi Mahomed Eskandar Ali is also vested with powers under sections 133, 260, and 524 of the Code of Criminal Procedure.

No. 2861A.D.—The 22nd September 1902.—In exercise of the power conferred by sub section (1) of section 565 of the Code of Criminal Procedure, 1898, the Lieutenant-Governor is pleased to empower the following Magistrate of the first class in the district of Midnapore, viz., Babu Ram Sadan Bhattacharjee, to order, at the time of passing sentence of imprisonment on any person referred to in that sub-section, that the residence or change of residence of such person after release shall be notified as provided by the rules made under sub-section (3) of the said section.

Midnapore.

Babu Ram Sadan Bhattacharjee is also vested with powers under sections 110, 186, 190 (1) (*c*), and 524 of the Code of Criminal Procedure.

No. 2647J.D.—The 15th September 1902.—Babu Pramatha Nath Giri, who has been appointed to be an Honorary Magistrate of the Independent Bench at Katwa, in the district of Burdwan, is vested with the powers of a Magistrate of the third class.

Burdwan.

No. 2628J.D.—The 16th September 1902.—Babu Obhay Churn Das, who has been re-appointed to be an Honorary Magistrate of the Independent Bench at Narayanganj, in the district of Dacca, is vested with the powers of a Magistrate of the third class. He is also authorised to sit singly for the trial of such cases as may be made over to him by the Subdivisional Officer of Narayanganj.

Dacca.

No. 2759J.D.—The 20th September 1902.—Kazi Saiyid Muhammad Mobin, who has been appointed to be an Honorary Magistrate of the Independent Bench at Lakhisarai, in the district of Monghyr, is vested with the powers of a Magistrate of the third class.

Monghyr.

C. E. BUCKLAND,
Chief Secy. to the Govt. of Bengal.

NOTIFICATIONS.

No. 2680J D.—The 18th September 1902.—Mr. C. Sandford, Chief Superintendent in the office of the Accountant-General, Bengal, whose services have been placed by the Government of India, Finance and Commerce Department, temporarily at the disposal of this Government, is appointed on special duty in connection with the revision of the present system of work of the Accounts Branch of the Appellate Side of the High Court, Calcutta.

Calcutta.

No. 2728J.D.—The 20th September 1902.—In exercise of the powers conferred by section 360 of the Code of Civil Procedure (Act XIV of 1882), the Lieutenant-Governor is pleased to invest the Court of the Special Subordinate Judge attached to the districts of Manbhum and Singhbhum in the Chota Nagpur Division with the powers conferred on District Courts by sections 344 to 359 (both inclusive) of the Code, to be exercised within the local limits of the Manbhum district.

Manbhum.
Singhbhum.

This cancels so much of the notification of this Government dated the 9th January 1878, published at page 41, part I of the *Calcutta Gazette* of the 16th idem, as vested the Court of the Deputy Commissioner of Manbhum with similar powers.

No. 2729J.D.—The 20th September 1902.—In exercise of the powers conferred by section 26, sub-section (1), of the Succession Certificate Act, 1889 (VII of 1889), the Lieutenant-Governor is pleased to invest the special Subordinate Judge attached to the districts of Manbhum and Singhbhum in the Chota Nagpur Division with the functions of a District Court under that Act, to be exercised within the local limits of the Manbhum district.

Manbhum.
Singhbhum.

This cancels so much of the notification of this Government, dated the 15th July 1889, published at page 615, Part I, of the *Calcutta Gazette* of the 17th idem, as vested the Deputy Commissioner of Manbhum with similar functions.

C. E. BUCKLAND,
Chief Secy. to the Govt. of Bengal.

DECLARATION.

No. 2645J.D.—The 16th September 1902.—Whereas it appears to the Lieutenant-Governor of Bengal that land is required to be taken by Government at the public expense for a public purpose, viz., for the construction of a barrack for the constables of the Sadar police-station, in the town of Burdwan, pargana Burdwan, zilla Burdwan, it is hereby declared that for the above purpose a piece of land measuring, more or less, 6 cottahs 4 chitaks of standard measurement, bounded on the north by Babu Ram Lal Mukerji's tank, on the east by the Sadar police-station, on the south by the buildings Nos 26 and 27 belonging to the Maharaja of Burdwan and Raj Ballav Dutta, respectively, and on the west by the house and homestead land of Wazador Rahaman Choudhury and others, is required within the aforesaid town of Burdwan.

Burdwan.

This declaration is made, under the provisions of section 6 of Act I of 1894, to all whom it may concern.

A plan of the land may be inspected in the office of the District Superintendent of Police, Burdwan.

C. E. BUCKLAND,
Chief Secy. to the Govt. of Bengal.

DECLARATION.

No. 2658J.D.—The 19th September 1902.—Whereas it appears to the Lieutenant-Governor of Bengal that land is required to be taken by Government at the public expense for a public purpose, viz., for Jagganath-gunge police outpost building in the village of Jorebari, pargana Kagmari, zilla Mymensingh, it is hereby declared that for the above purpose a piece of land measuring, more or less, 4 highas, 5 cottahs and 2 chitaks of standard measurement, is required. The land is bounded on the—

Mymensingh.

North—By a khal and road.
South—By railway land and village Gujadia.
East—By village Gujadia and khal.
West—By railway land and road.

This declaration is made, under the provisions of section 6 of Act I of 1894, to all whom it may concern.

A plan of the land may be inspected in the office of the Collector of Mymensingh.

C. E. BUCKLAND,
Chief Secy. to the Govt. of Bengal.

DECLARATION.

No. 2786J.D.—The 20th September 1902.—Whereas it appears to the Lieutenant-Governor of Bengal that land is required to be taken by Government at the public expense for a public purpose, viz., for the construction of latrines for the police at the Bakarganj outpost, in the village of Salempur-Bakarganj, pargana Azimabad, zilla Patna, it is hereby declared that for the above purpose a piece of land measuring, more or less, 3 cottahs and 12·50 chitaks of standard measurement, bounded on the north, south, and east by the khud jot land of Nauji Mian, and on the west by a village pathway and the embankment and land of Nauji Mian, is required within the aforesaid village of Salempur-Bakarganj.

Patna.

This declaration is made, under the provisions of section 6 of Act I of 1894, to all whom it may concern.

A plan of the land may be inspected in the office of the Collector of Patna.

C. E. BUCKLAND,
Chief Secy. to the Govt. of Bengal.

PROCLAMATION.

No. 2827J.D.—The 22nd September 1902.—Under Section XV of Act V of 1861 (as amended by Act VIII of 1895) the Lieutenant-Governor declares that the conduct of the inhabitants of the villages of Galua, Kaibartakhali and Sreepur in Outpost Rajapur, Police Station Jhalokati, in the district of Backergunge, has rendered it expedient to increase the number of the Police force by the appointment of an additional force to be quartered therein at the cost of the inhabitants of the aforesaid villages. This proclamation shall remain in force for a period of twelve months from this date.

Backergunge.

The Proclamation No. 3851J., dated the 21st August 1902, published in the *Calcutta Gazette* of the 27th idem, is cancelled.

C. E. BUCKLAND,
Chief Secy. to the Govt. of Bengal.

Rule to prevent accidents at the Armenian Ghat north Landing-stage.

UNDER section 62 of the Calcutta Police Act, 1866, the following rule has been made by the Commissioner of Police, with the sanction of the Lieutenant-Governor, for the purpose of preventing accidents to passengers in boarding or leaving the Ferry steamer at the Armenian Ghat north landing-stage :—

When the pontoon or landing-stage at the Armenian Ghat is thronged or liable to be obstructed, no person shall board or attempt to board or leave or attempt to leave a Ferry steamer while the same is still in motion, and no person shall board or attempt to board or leave or attempt to leave a Ferry steamer by any landing-stage until such landing-stage shall have been made fast.

Every person opposing or not obeying the above will be liable, under section 62 of the Calcutta Police Act, 1866, on summary conviction before a Magistrate, to a fine not exceeding one hundred rupees.

CALCUTTA,
The 15th September 1902.

R. A. D.' O. BIGNELL,
Commissioner of Police.

PUBLIC WORKS DEPARTMENT.

ESTABLISHMENT.

The 17th September 1902.

No. 191.—The Lieutenant-Governor is pleased to make the following promotions in the Engineer Establishment with effect from the 23rd August 1902 :—

NAMES.	From—	To—	Nature of promotion.
Barlow, H.	Executive Engineer, 2nd grade.	Executive Engineer, 1st grade.	Permanent.
MacCarthy, A. H. C. ...	Executive Engineer, 3rd grade.	Executive Engineer, 2nd grade.	Ditto.
Stevens, H. H. ...	Assistant Engineer, 3rd grade.	Assistant Engineer, 2nd grade.	Ditto.

D. B. HORN,
Secy. to the Govt. of Bengal.

COMMUNICATIONS.

The 23rd September 1902.

No. 192C.—Declaration.—Whereas it appears to the Lieutenant-Governor of Bengal that land is required to be taken by the District Board of Manbhum for a public purpose, viz., for the construction of a cart *serai* in village Rudra, it is hereby declared that, for the above purpose, two pieces of land measuring, more or less, 1 bigha and 5 cottahs (each plot) of standard measurement, on both sides of the Purulia-Ranchi Road, which passes through the village of Rudra, are required. The land in question commences from a distance of 240 feet west of the 9th mile-post of the said Purulia-Ranchi Road

This declaration is made, under the provisions of section 6 of Act I of 1894, to all whom it may concern.

A plan of the land may be inspected in the office of the Deputy Commissioner of Manbhum.

W A. INGLIS,
Offg Secy. to the Govt. of Bengal.

CIVIL BUILDINGS.

The 23rd September 1902.

No. 192.—Declaration—Whereas it appears to the Lieutenant-Governor of Bengal that land is required to be taken by Government at the public expense for a public purpose, viz, for the construction of Double Munsifi at Barruipur in the village of Poaledanga, pargana Medenmolla, zilla 24-Parganas, it is hereby declared that for the above purpose a piece of land measuring, more or less, 10 bighas 10 cottahs 10 chitaks of standard measurement, bounded on the north by partly the land of Gholam Hassein, Nazir of Chetla and Ray Chowdhury, Zamindar of Barruipur, and partly by the kancha road to Barruipur station, on the south by the lands of Babu Girish Chundra Banerjee and others of Gobindapur, thana Barruipur, on the east by the lands belonging to the Eastern Bengal State Railway, Southern Section, and on the west by the Calcutta-Barruipur road, is required within the aforesaid village of Poaledanga.

This declaration is made, under the provisions of section 6 of Act I of 1894, to all whom it may concern.

A plan of the land may be inspected in the office of the Executive Engineer, Northern Drainage and Embankment Division, Calcutta.

W. A. INGLIS,
Offg. Secy. to the Govt. of Bengal.

IRRIGATION DEPARTMENT.

The 23rd September 1902.

No. 193.—Declaration.—Whereas it appears to the Lieutenant-Governor of Bengal that land is required to be taken by Government at the public expense for a public purpose, viz, for Sectional Officer's quarters at Byri in the village of Byri, pargana Killah Darpan, zilla Cuttack, it is hereby declared that for the above purpose a piece of land measuring, more or less, 3 roods and 23·5 poles of standard measurement, bounded on the north, south, east, and west by the cultivated lands of Mouza Byri, is required within the aforesaid village of Byri.

This declaration is made, under the provisions of section 6 of Act I of 1894, to all whom it may concern.

A plan of the land may be inspected in the office of the Land Acquisition Officer, Irrigation Branch, Cuttack.

[Second Publication]

The 16th September 1902.

No. 189.—Notification—With reference to this Department Notification No. 186, dated the 9th September 1902, published at page 1223, Part I of the *Calcutta Gazette* of the 10th idem, it is hereby notified that, under the provisions of section VI of Act V (B.C.) of 1864, His Honour the Lieutenant-Governor of Bengal proposes that the following rates of tolls will be levied at the undermentioned places on the channel connecting the river Madhumati with the river Nobogunga from Telkora to Bordia in the Narail subdivision of the district of Jessore :—

I. Schedule of rates of tolls—

		As.
1.	For empty or laden boat weighing less than 100 maunds ...	1
2.	For each 100 maunds of empty or laden boat	2
3.	For each raft containing grass, bamboo and wood and measuring 50 feet long and 5 feet broad	4

II Places where tolls are to be levied—

Tolls for passage through the channel shall be levied near the village of Telkora at the mouth and at the other end of the channel near the village of Bordia and at no other places.

D. B. HORN,
Secy. to the Govt. of Bengal.

RAILWAY DEPARTMENT.

The 23rd September 1902.

No. 193R.—Declaration.—Whereas it appears to the Lieutenant-Governor of Bengal that extra land is required to be taken by Government at the publ c expense for a public purpose, viz., for the Midnapore-Jherria extension of the Bengal-Nagpur Railway, in the villages mentioned below in the district of Bankura, it is hereby declared that for the above purpose a piece of land measuring, more or less, 45 bighas 11 cottahs and 12 chittaks of standard measurement, is required within these villages—

Name of village.	Pargana.	Area in—	Area in standard—
		A. R. P.	B. C. CH.
Onda	Vishnupur ...	8 0 19	25 5 10
Kumardanga	Ditto	6 2 36	20 6 2
Total ...	.....	14 3 15	45 11 12

Mines of coal, iron-stone, slate or other minerals lying under the land, except only such parts of the mines and minerals as it may be necessary to dig or carry away, or use in the construction of the work for the purpose of which the land is being acquired, are not needed.

This declaration is made, under the provisions of section 6, Act I of 1894, and section 3, clause (1), Act XVIII of 1885, to all whom it may concern.

No. 194R.—Declaration.—Whereas it appears to the Lieutenant-Governor of Bengal that land is required to be taken by Government at the public expense for a public purpose, viz., for an assisted siding for the West Barobani Coal Company, off Sitarampur-Domohani Extension, East Indian Railway, in the village of Nowpara, pargana Kanthanogor, zilla Burdwan, it is hereby declared that for the above purpose a piece of land measuring, more or less, 6 bighas 14 cottahs 5·32 chittaks of standard measurement (corresponding to 2 acres 35·26 poles), bounded on the north by the Nowpara tank waste lands of Moharaja Monindra Chandra Nandi, on the south and east by the paddy lands of Tarak Ray, and on the west by the East Indian Railway Company's land, is required within the aforesaid village of Nowpara.

Mines of coal, iron-stone, slate or other minerals lying under the land, except only such parts of the mines and minerals as it may be necessary to dig or carry away, or use in the construction of the work for the purpose of which the land is being acquired, are not needed.

This declaration is made, under the provisions of section 6 of Act I of 1894, and section 3, clause (1), Act XVIII of 1885, to all whom it may concern.

A plan of the land may be inspected in the office of the District Engineer, East Indian Railway, Asansol.

No. 195R.—Declaration.—Whereas it appears to the Lieutenant-Governor of Bengal that land is required to be taken by Government at the public expense for a public purpose, viz, for widening the platforms of Banka Ghat station, in the villages of Jethuli and Makhdumpur, pargana Azimabad, zilla Patna, it is hereby declared that for the above purpose two pieces of land measuring, more or less, 7 bighas 9 cottahs 0·31 chittak of standard measurement (corresponding to 2·463 acres), bounded as follows, are required within the aforesaid villages of Jethuli and Makhdumpur:—

Plot No. 1.—On the north by the fields of Munshi Elahi Bakhsh, Shaikh Shamshul Huda, and Babu Mahabir Prasad; on the south and west by the East Indian Railway fencing, and on the east by the field of Babu Mahabir Prasad and the Local Board road from Jethuli to Birantipur.

Plot No. 2.—On the north by the East Indian Railway fencing; on the south by the fields of Luran, Chaman, Khub Lal, Dulli, and Nathuni Bhagats; on the east by the fields of Balgobind and Chamru Bhagats, and on the west by the fields of Luran, Lachhman, and Ram Charan Bhagats.

Mines of coal, iron-stone, slate or other minerals lying under the land, except only such parts of the mines and minerals as it may be necessary to dig or carry away, or use in the construction of the work for the purpose of which the land is being acquired, are not needed.

This declaration is made, under the provisions of section 6 of Act I of 1894, and section 3, clause (1), Act XVIII of 1885, to all whom it may concern.

A plan of the land may be inspected in the office of the Collector of Patna.

W. A. INGLIS,
Offg. Secy. to the Govt. of Bengal.

MARINE DEPARTMENT.

The 23rd September 1902.

No. 127Marine.—Mr. R. H. Shelverton, Licensed Branch Pilot, is granted leave without allowance for one month, under article 372 of the Civil Service Regulations, in extension of the leave for one month and three days granted to him in the Notification of this Government, No. 123Marine, dated the 8th instant.

D. B. HORN,
Secy. to the Govt. of Bengal.

The 23rd September 1902.

No. 128Marine.—The following abstract account of the receipts and payments of the Cuttack and Balasore Ports for the year 1901-1902 is herewith published for general information, under section 36, sub-section (2), of the Indian Ports Act, 1889.

D. B. HORN,
Secy. to the Govt of Bengal.

Receipts.	Balasore.	Cuttack.	Puri.	Total.
	Rs. A. P	Rs. A. P.	Rs. A. P	Rs. A. P.
pening balance on 31st March 1902.	....	... ..	10,387 10 9	10,387 10 9
ort dues	3,140 2 3	8,594 0 0	1,532 10 0	13,275 12 3
ale proceeds of furniture	56 8 0	. .	.. ..	56 8 0
iscellaneous	.....	31 1 6	.....	31 1 6
Total ...	3,205 10 3	8,625 1 6	11,920 4 9	13,363 5 9
GRAND TOTAL ...	... .	.... .	.....	23,751 0 6

Disbursement.	Balasore.	Cuttack.	Puri.	Total.
	Rs. A P.	Rs. A. P.	Rs. A. P.	Rs. A. P.
Percentage charges of Banking Establishment.	28 11 0	37 14 11	7 2 0	73 11 11
Light House Establishment—				
Establishment charges ...	450 0 0	.....	382 8 0	832 8 0
Stores	2,832 4 10	. . .	.. ..	2,832 4 10
Contingencies	2 6 9	... .	23 0 8	25 7 0
General management—				
Port Officer's pay	2,725 5 0	929 15 5	... .	3,655 4 5
Ditto travelling allowance.	621 14 0	.... ..	. .	634 14 0
Establishment	1,459 1 10	1,318 10 2	.. .	2,777 12 0
Contingencies	165 0 3	66 4 0	63 13 4	295 1 7
Vessels and Boats—				
Dockyard Services and supplies.	1,537 8 0	876 7 9	288 2 2	2,702 1 11
Miscellaneous—				
Pension	22 10 6	1,586 6 6	.....	1,609 1 0
Public Works	21 9 8	..	.....	21 9 8
Total ..	9,869 7 10	4,815 10 9	764 9 9	.....
GRAND TOTAL ...	.....	.....	.....	15,449 12 4
Balance in hand on 31st March 1902.	.....	.....	.....	8,301 4 2
GRAND TOTAL ...	.....	.....	.....	23,751 0 6

SUBORDINATE CIVIL SERVICE.

No. 4081A.

No. 2859A.D.—The 22nd September 1902.—Babu Kunja Lal Ghose, substantive *pro tempore* Sub-Deputy Collector, Satkhira, in the district of Khulna, is transferred temporarily to the head-quarters station of that district.

Khulna.

C. E. BUCKLAND,
Chief Secy. to the Govt. of Bengal.

JAIL DEPARTMENT.

No. 11098, dated the 18th September 1902.—Military Assistant Surgeon F. J. Daley took over medical charge of the Alipore Central Jail on the forenoon of the 2nd July 1902.

JOHN MULVANY, CAPTAIN, I.M.S.,
for *Inspr.-Genl. of Jails, Bengal.*

CIVIL MEDICAL DEPARTMENT, BENGAL.

No. 2817D., dated the 17th September 1902.—Assistant Surgeon Basanta Kumar Roy acted as Resident Assistant Surgeon, Howrah General Hospital, from the forenoon of the 13th June to the forenoon of the 1st August 1902 during the absence, on deputation, of Assistant Surgeon Satya Saran Mitra.

No. 2820D, dated the 17th September 1902. Assistant Surgeon Basanta Kumar Roy is appointed to do supernumerary duty at the Medical College Hospital, Calcutta, with effect from the forenoon of the 4th August 1902.

T. H. HENDLEY, COL., I.M.S.,

Inspector-General of Civil Hospitals, Bengal.

NOTIFICATION.

Examination of Compounders at the Dacca Medical School.

IN accordance with the Government of Bengal Notifications Nos. 4042Medl, dated 2nd November 1896, and 337T.—M., dated 9th June 1897, notice is hereby given that the next half-yearly examination of compounders will be held on Monday, the 27th October 1902, at the Dacca Medical School.

2. Every candidate must produce a certificate of training, age, and previous education, as required by Rule 9 of Bengal Notification No. 4042Medical, dated 2nd November 1896, published in the *Calcutta Gazette* of the 4th November 1896, except in those cases provided for in Rule 10.

3. Applicants must register their names and submit their certificates, together with a fee of Rs. 5, at least one week before the 27th October 1902 at the office of the undersigned.

[EXCEPTION.— The students belonging to the Compounder class of a Vernacular Medical School will be exempted from paying this fee on producing a certificate from the Superintendent that they have already paid their school entrance fee]

4. Should any candidate fail to pass the required examination, he will forfeit his fee.

5. Candidates will have to pass a test in English before being allowed to appear for the rest of the examination.

This test consists of reading and writing from dictation, prescriptions and labels.

They will, if successful, be then examined in Materia Medica, Pharmacy, the compounding and mixing of drugs, &c.

NOTE.—The attention of the candidates is drawn to Rule 10, section (2) of the Government notification of the 2nd November 1896, from which they will observe that the Chemists and Druggists' establishments, from the legally-qualified managers of which they obtain their certificates, will have to be recognised by the Inspector-General of Civil Hospitals, Bengal, prior to the candidates applying to the Superintendent to register their names to appear at the examination.

R. NEIL CAMPBELL, M.B., I.M.S.,

The September 1902. *Offg. Superintendent, Medical School, Dacca.*

NOTIFICATION.

Examination of Compounders at the Orissa Medical School.

IN accordance with the Government of Bengal Notifications Nos. 4042Medl., dated 2nd November 1896, and No. 288Medl., dated 17th January 1902, notice is hereby given that the next half-yearly examination of Compounders will begin at 8 A.M. on Tuesday, the 21st October 1902, at the Medical School, Cuttack.

2. Every candidate must produce a certificate of training and a certificate of age and previous education as required by Rule 9 (*vide* Government of Bengal Notification No. 4042-Medl., dated 2nd November 1896, published in the *Calcutta Gazette* of the 4th November 1896, and circulated by the Inspector-General of Civil Hospitals, Bengal, to all Civil Surgeons, Superintendents of Medical Schools, Lunatic Asylums and Calcutta Hospitals with his Circular No. 60, dated 5th December 1896).

3. All male candidates either belonging to the Compounder class of the Vernacular Medical Schools or to the outside dispensaries must forward to the Superintendent, Medical School, Cuttack, an examination fee of Rs. 5 at least one week before the 21st October 1902.

Female candidates will be examined free of charges.

4. Should any candidate fail to pass the examination, he will forfeit his fee.

NOTE.—The attention of candidates is drawn to Rules 9, 10 and 12 (*a*) and (*b*), and of the persons granting the certificates to Rules 11 and 14 (3) and (4), and to the certificate, Forms C and D, in the schedule of the Government of Bengal's aforesaid Notification No. 4042Medl., dated 2nd November 1896.

J. T. CALVERT, M.B. (LOND.), MAJOR, I.M.S.,

Superintendent, Orissa Medical School, Cuttack.

CUTTACK, *the 9th September 1902.*

Sheriff's Office, the 17th September 1902.

NOTICE is hereby given that the Fifth Criminal Sessions of the year 1902 of the High Court of Judicature at Fort William in Bengal, for the Town of Calcutta and Factory of Fort William, and the places subordinate thereto, will be held at the Court-house, in the Town of Calcutta, on Monday, the first day of December next, at 11 o'clock in the forenoon, and thence forward from day to day until the said Sessions be over. And it is hereby proclaimed that all persons who are to prosecute any of the prisoners to be brought up for trial at the said Sessions be present then and there to prosecute.

H. M. RUSTOMJEE, *Sheriff.*

সরিফ আফিস, সন ১৯০২ সাল তারিখ ১৭ই সেপ্টেম্বর।

সকলকে সমাচার দেওয়া যাইতেছে যে হুকে বাঙ্গালার কোর্ট উইলিয়ম দুর্গের অধীন শহর কলিকাতার ও অন্যান্য স্থানের ফৌজদারী বিচার নিষ্পত্তি জন্য আগামী সন ১৯০২ সালের ১লা ডিসেম্বর সোমবার বেলা ১১ ঘটিকার সময় এবং যে পর্য্যন্ত সেশিয়ানের কার্য্য শেষ না হয় প্রতিদিন উক্ত সময়ে কলিকাতার হাইকোর্টের আপন আদালত ঘরে সন ১৯০২ সালের পঞ্চম ক্রিমিনেল সেশিয়ান বসিবেক এবং এতদ্দ্বারা প্রচার করা যাইতেছে যে, যে সকল ব্যক্তি কোন কয়েদির বিরুদ্ধে ফৌজদারী মিছিল করিবেক তাহারা উক্ত স্থানে উক্ত সময়ে হাজির থাকিয়া মোকদ্দমা করে ইতি।

এইচ্, এম্, রুস্তমজী, সরিফ।

EDUCATION DEPARTMENT, BENGAL.

Subordinate Educational Service.

The 13th September 1902.—Babu Bhubaneswar Sanyal, Sub-Inspector of Schools, Giridih (class VII), was granted by the District Board of Hazaribagh privilege leave for 10 days, in extension of the leave already granted to him, and notified under date 7th July 1902.

The 15th September 1902.—Babu Chuni Lal Mustafi is appointed on probation for six months to be Farm Overseer in the Hazaribagh Reformatory School, and substantively *pro tempore* to class VIII of the Subordinate Educational Service, with effect from the date on which he joins that appointment, *vice* Babu Hara Kumar Guha, transferred.

The 17th September 1902.—In modification of the orders of the 6th June 1902, Babu Dwarka Nath Das, Head Clerk, Office of the Inspector of Schools, Rajshahi Division (class VIII), was absent on leave, under article 294 of the Civil Service Regulations, from the 2nd June to the 19th August 1902, both days inclusive.

The 18th September 1902.—Babu Hari Nandan Sinha, Inspecting Pandit of Godda, acted as Sub-Inspector of Schools, Godda, and in class VIII of the Subordinate Educational Service from the 12th January to the 20th March 1902, both days inclusive, during the absence, on medical leave, of Babu Haran Chandra Gupta.

The 20th September 1902.—In supersession of the orders of the 20th July 1902, Babu Sarat Chandra Bose, an Assistant Master of the Hare School (class VIII), was absent on leave for twenty days under article 369 of the Civil Service Regulations, with effect from the 21st April 1902.

A. PEDLER

Director of Public Instruction, Bengal.

Affiliation of the University of Calcutta to the University of Oxford.

IN a Convocation of the Oxford University held on June 3rd, 1902, the following Revised Statute on Colonial and Indian Universities (Stat. Tit. II, Sect. VII) was approved:—

Whereas it is expedient (1) to provide for the making of regulations for carrying into effect the provisions of the Statute on Colonial and Indian Universities; (2) to enable Candidates from these Universities under certain conditions to offer themselves for examination in any Honour School of the Second Public Examination, and to supplicate for the Degree of Bachelor of Arts without having passed either Responsions or the First Public Examination; and (3) to confine the requirement of a sufficient knowledge of the Greek language to Candidates from Colonial Universities, and to determine the conditions under which Candidates shall be permitted to satisfy that requirement by passing approved examinations of such Universities, the University enacts as follows :—

1. Any University situated in any part of the British Dominions other than the United Kingdom may apply to this University to be admitted to the privileges of this section of the Statutes.

Add., page 932 [1887].

2. The application shall be addressed to the Vice-Chancellor, who shall report the same to the Hebdomadal Council.

3. The Hebdomadal Council, after considering such application and after making such inquiry as it shall deem necessary, shall, if it think fit, propose to Convocation that the University so applying shall be admitted to the privileges of this section of the Statutes. A University admitted to the privileges conferred by this section of the Statutes may at any time renounce such privileges, and this University may at any time by a vote of Convocation withdraw the same from any University.

4. Any member of a University so admitted, who shall have pursued a course of study prescribed by it and extending over two years, and who shall have passed all the examinations incident to the course, may be admitted to the status and privileges of a Junior Colonial or Indian Student.

5. Any member of a University so admitted, who shall have pursued a course of study prescribed by it and extending over three full years, and who shall have taken Honours in the final examination incident to the course, may be admitted to the status and privileges of a Senior Colonial or Indian Student.

6. It shall be the duty of the Hebdomadal Council to draw up and submit to Convocation a statement of the conditions under which a member of a University so admitted shall be deemed to have taken Honours as aforesaid. Every such statement, if approved by Convocation, shall have the force of regulations made by Statute.

7. The status and privileges of a Junior Student shall be as follows :—

(*a*) The Term in which he is matriculated shall be reckoned, for the purposes of any provisions respecting the standing of members of the University, as the fifth Term from his matriculation.

(*b*) A Junior Student shall not be required to pass Responsions, or to pass in an Additional Subject at Responsions.

(*c*) A Junior Student who has passed the Second Public Examination, and has obtained Honours either in the First or in the Second Public Examination, shall be entitled to supplicate for the Degree of Bachelor of Arts so soon as he shall have kept statutable residence for eight Terms. Provided that, if he is a Colonial Student, he has shown a sufficient knowledge of the Greek language.

(*d*) A Junior Student who has passed the Second Public examination, but has not obtained Honours either in the First or in the Second Public examination, shall be entitled to supplicate for the Degree of Bachelor of Arts so soon as he shall have kept statutable residence for twelve Terms. Provided that, if he is a Colonial Student, he has shown a sufficient knowledge of the Greek language.

8. The status and privileges of a Senior Student shall be as follows :—

(*a*) The Term in which he is matriculated shall be reckoned, for the purposes of any provisions respecting the standing of members of the University, as the fifth Term from his matriculation.

(*b*) A Senior Student shall not be required to pass any part of Responsions or of the First Public Examination or any Preliminary Examination of the Second Public Examination.

(*c*) A Senior Student who has obtained Honours in the Second Public Examination shall be entitled to supplicate for the Degree of Bachelor of Arts so soon as he shall have kept statutable residence for eight Terms. Provided that, if he is a Colonial Student, he has shown a sufficient knowledge of the Greek language.

9. Every person who, having been matriculated, desires to claim the status of a Junior or Senior Student, shall make his application through an officer of a College or Hall or of the Non-Collegiate Body, to the Secretary to the Boards of Faculties, and shall at the same time pay to the University Chest, through the Secretary, the sum of one pound or of two pounds, according as he is admitted as a Junior or a Senior Student. If he makes his application later than a week from matriculation, he shall pay an additional fee of one pound.

10. Any person qualified to become a Junior Student on matriculation may be admitted to any part of Responsions, any part of the First Public Examination, and any Preliminary Examination in the Second Public Examination.

11. Every person who, being qualified to become a Junior or Senior Student on matriculation, desires to have his name entered for an examination before he has been matriculated shall make his application to the Secretary through an officer of a College or Hall or of the Non-Collegiate Body, who shall send the name to the Secretary seven clear days before the day fixed for entering names for the examination in question, together with—

(*a*) The statutable fee and in addition thereto the sum of one pound or of two pounds according as the Candidate claims to be qualified to become a Junior or a Senior Student;

(*b*) A declaration that the Candidate in his opinion *bonâ fide* desires admission to his College or Hall or as a Non-Collegiate Student as the case may be; and

(*c*) Evidence showing that the Candidate is qualified as aforesaid.

Any Candidate whose name has been entered for an examination as aforesaid shall, so soon as he has been matriculated, become a Junior or a Senior Student, as the case may be.

12. A Colonial Student shall be deemed to have shown a sufficient knowledge of the Greek language if he has passed—

either (*a*) one of the examinations enumerated below in the Schedule;

or (*b*) such examination or examinations of his University as shall satisfy the conditions laid down under the provisions of the next following clause. Provided that evidence of his having satisfied these conditions shall have been produced to the Secretary within one week from his matriculation, and that a registration fee of five shillings shall have been paid through the Secretary to the University Chest.

13. It shall be the duty of the Hebdomadal Council to draw up a statement of the conditions under which a member of a University which has been admitted to the privileges of this Statute shall be deemed to have shown a sufficient knowledge of the Greek language in the examinations of his University. Every such statement shall be submitted to Convocation, and, if approved, shall have the force of regulations made by Statute.

14. The Secretary shall have power to make and vary from time to time regulations for the admission of qualified persons to the status of a Junior or Senior Student, and for enabling Junior or Senior Students, or persons qualified to become Junior or Senior Students, to offer themselves for examination under the provisions of this section, provided that all such regulations and any variation in them shall be submitted to the Vice-Chancellor and Proctors for approval.

15. It shall be the duty of the Secretary to keep a sufficient record of the members of the University who have the status and privileges of a Junior or Senior Student respectively, and of the persons not yet matriculated whose names have been entered for an examination under the provisions of this section, and to see that no Candidate is admitted to examination or to any of the privileges of a Junior or Senior Student who has not satisfied the conditions of this section.

SCHEDULE.

1. The Examination in Stated Subjects in Responsions, or any examination which under Tit. VI. Sect. 1 § 2 exempts a Candidate from Responsions.

Add., p. 1036 [1898].

2. The Examination in Additional Subjects in Responsions, the subjects offered being a Greek book, or any examination, including Greek, which is accepted by the University as equivalent to this examination.

3. The Examination of Candidates in the Greek language only at Responsions.

4. The Examination of Candidates not seeking Honours in the First Public Examination.

5. The Examination of Candidates for Honours in Greek and Latin Literature in the First Public Examination.

6. The Preliminary Examination in the Honour School of Jurisprudence, provided that the Candidate satisfies the Examiners in a Greek book in that Examination.

7. Group A. I and D of the Examination of Candidates who do not seek Honours in the Second Public Examination.

8 and 9. The Honour Schools of Literæ Humaniores and of Theology in the same Examination.

SENATE HOUSE, *The 19th September 1902.*

K. C. BANURJI, *Offg. Registrar, Calcutta University.*

THE ELLIOTT PRIZE FOR SCIENTIFIC RESEARCH FOR 1902.

WITH reference to Notification No. 5058F. in the *Calcutta Gazette* of the 28th December 1892, Part I, page 1172, the ELLIOTT PRIZE FOR SCIENTIFIC RESEARCH will be given this year to the author of the best original essay composed during the year 1902, giving the results of original research or investigation by the essayist on *Natural History*.

2. Any native of Bengal, including any Eurasian or domiciled European residing in Bengal, may compete for the prize.

3. The essays of competitors *must be* sent in to the President of the Bengal Asiatic Society, 57 Park Street, Calcutta, by the end of December 1902. The prize will be adjudged to the best competitor, and awarded publicly at the Annual General Meeting of the Asiatic Society in February 1903.

Preference will be given to researches leading to discoveries likely to develop the industrial resources of Bengal. In the case of no essay being deemed by the Trustees to be of sufficient merit, no prize is to be awarded, but the amount is to be retained, so that in any future year two or more prizes may be given, or the prize may be enhanced in the case of an exceptionally good essay.

C. W. BOLTON,
President of the Asiatic Society of Bengal.

T. RALEIGH,
Vice-Chancellor of the Calcutta University.

CALCUTTA; *The 30th August 1902.*

ALEX. PEDLER,
Director of Public Instruction, Bengal.

NOTIFICATION.

IT is hereby notified that for the ensuing half-yearly departmental examination of Junior Civilians, Deputy Magistrates and others, to be held at 11 A.M. on the 3rd November 1902 and the two following days, a local Examination Committee will be convened at the office of the Commissioner, Presidency Division, at No. 3, Charnock Place, Calcutta, for officers employed in all the districts of this Division.

C. J. STEVENSON-MOORE, *Offg. Commissioner.*

COMMR.'S OFFICE, PRESY. DIVN., CALCUTTA, *the 17th September 1902.*

NOTIFICATION.

IN connection with the second half-yearly departmental examination in 1902 of Assistant Magistrates and others, to be held on Monday, the 3rd November 1902, and the two following days, it is hereby notified that there will be a local centre at Dacca for officers employed in the districts of the Dacca and Chittagong Divisions.

The examination will be held in the Commissioner's Court-room, and will begin at 11 A.M. and 2 P.M. each day.

H. M. KISCH, *Offg. Commissioner.*

DACCA COMMR.'S OFFICE, *the 17th September 1902.*

ORDERS BY THE HON'BLE THE VICE-CHANCELLOR AND SYNDICATE OF THE CALCUTTA UNIVERSITY.

1. Of H. E. Berthon's "Specimens of Modern French Verse" (Macmillan's Foreign School Classics), prescribed for the F. A. Examination in 1904, only pages 1—68 are to be read and not the whole book.

2. For the F.A. Examination in 1904, Gregg's "Text-book of Indian Botany," pages 1—224, has been replaced by the following:—

Oliver's First Book of Indian Botany: the whole of Part I and Chapter I of Part II, viz., the Elements of Morphology and Physiology of Flowering Plants, the Principles of their Natural Classification, and the diagnosis and detailed accounts of the following Natural Orders:—

1. Magnoliaceæ.
2. Bixaceæ.
3. Meliaceæ.
4. Sapindaceæ.
5. Combretaceæ.
6. Compositæ.
7. Convolvulaceæ.
8. Labiatæ.
9. Amarantaceæ.
10. Lauraceæ.
11. Liliaceæ.
12. Gramineæ.

3. The words "or the corresponding portions of the 16th edition, 1902," have been inserted after the portions of Ganot's Physics specified by way of inclusion or of exclusion for the B.A. and B.Sc. Examinations in 1904 in both Pass and Honour Courses.

4. For the B. A. Examination in 1904, Medlicott and Blanford's "Manual of the Geology of India," 2nd edition, by R. D. Oldham, A.R.S.M., has been added to the list of text-books in Geology, both in the Pass and in the Honour Course.

5. For the B A. and B. Sc. Examinations in 1904 and the M. A. Examination in 1903, Rutley's "Mineralogy" and "Rock-forming Minerals" have been substituted for Dana's "Text-book of Mineralogy," and Nicholson and Lyddekar's "Palæontology," Vol. II, has been substituted for Vol. II of Zittel's "Text-book of Palæontology."

6. Chapter XX of Burnside and Panton's "Theory of Equations" has been omitted from the course in Mathematics, group A. for the M.A. Examination in 1903.

7. The following books have been prescribed as text-books for the Examinations of the Calcutta University in 1903, 1904, and 1905:—

[*In all cases where reference is made to Chapters, Sections, Pages or Lines, thus Chaps. V—VIII, the reference is to be understood as inclusive.*]

ENTRANCE EXAMINATION, 1904.

The following portions of the English Selections appointed by the Syndicate for the Entrance Examination, and published by Messrs. Thacker, Spink & Co. in 1901, have been prescribed for the Entrance Examination of 1904:—

(TO BE READ.)

Prose.

Prince Charles's March to Derby.
The Merchant of Venice.
The Battle of Trafalgar.
The Village Schoolmistress.
On Character.
The Impurities of Air.
Ventilation.
Personal Hygiene.

Poetry.

Past and Present.
"Thou art, O God!"
The Journey Onwards.
The Hour of Death.
The Soldier's Dream.
Dora.
The Builders.

(TO BE COMMITTED TO MEMORY.)

"Thou art, O God!"
The Journey Onwards.
The Soldier's Dream.
The Builders.

Two papers to be set in English: the first paper to contain questions on the text-book and questions on grammar arising therefrom; the second paper to contain passages in a vernacular, as defined in paragraph 6 of the Regulations for the Entrance Examination, for translation

into English, together with questions on English composition. In the case of students whose vernacular is English, a special paper will be set in which simple essays or letters or other original composition will replace the passages for translation into English.

ENTRANCE EXAMINATION, 1905.

GREEK.

Xenophon ... ... Anabasis, Books I and II.

One paper to be set on Text and Grammar and one paper on Translation and Composition.

LATIN.

Cæsar ... ... De Bello Gallico, Book VII.

Ovid ... ... Stories from the Metamorphoses (Macmillan & Co.'s Elementary Classics Series).

One paper to be set on Text and Grammar and one paper on Translation and Composition, including easy passages from authors not prescribed beforehand to be translated into English.

GERMAN.

Hauff ... ... Das Wirtshaus im Spessart, by G. E. Fasnacht, omitting Saids Schicksale (Macmillan & Co.).

One paper to be set on Text and Grammar and one paper on Translation and Composition.

FRENCH.

Emile De Bonnechose ... Bertrand Du Geuselin (Pitt Press Series).

One paper to be set on Text and Grammar and one paper on Translation and Composition.

HEBREW.

The Book of Genesis.

One paper to be set on Text and Grammar and one paper on Translation and Composition.

ARMENIAN.

Michœl Chamiteh ... History of Armenia, Parts, I, II, and III.

SANSKRIT.

Calcutta University Selections for 1905, edited by Babu Nrisinha Chandra Mukerjee, M.A., B.L., and published by Messrs. S. K Lahiri & Co.

The following books or any others covering similar ground are recommended as text-books in* Sanskrit Grammar:—

Vidyáságar ... ... Vyákarana—Kaumudi,
or
Vidyáságar ... ... Upakramaniká as translated by Rájkrishna Banerji (12th edition),
or
Vidyáságar ... ... Vyákarana—Kaumudi (Hindi translation by Mathuranáth Sinha),
or
Nilmani Mukerjee ... Laghumanjarí,
or
Herambanáth Tattvaratna .. Vyákarana—Sangraha,
or
Kalikumár Sarman ... Vyákaranádarsa,
or
Kánhyailal Sástrí ... Vyákarana—Bodha (in Hindi),
or
Kánhyailal Sástrí ... Vyákarana—Bodha,
or
Gurunáth Sen Gupta ... Sukhabodha—Vyákarana,
or
Gadádhar Kábyatírtha ... Sanskrita-Bodha-Vyákarana,
or
Kálíschandra Vidyábinod ... Sanskrita-Prabes—Vyákarana,
or
Rajkumar Tarkaratna ... Students' Sanskrit Grammar.

BENGALI.

Calcutta University Selections for 1900, edited by Babu Srischandra Chaudhurí, M.A., B.L., and published by Messrs. S K Lahiri & Co.

Hemchandra Banerjee ... Poetical Selections.
Nukuleswar Vidyabhushan Bhásháboth Bánglá Vyákaran.

* Questions will be so set that they may be answered from any of the books named

HINDI.

Tulsidás ... ... Rámáyana, Ajodhyá Kánda.
Sitárám ... ... Uttararáma Charita (*Bháshá*).

URIYA.

M. S. Rao ... ... Prabandhamálá, pages 1-115.
Ram Naráyan Ráy ... Kabitá-Sangraha.

TELUGU.

Prose.

K. Veeresalingam ... Nitichęndica Sandhi.

Poetry

Selections published by the University of Madras for the Entrance Examination of December 1893, pages 13-30.

PALI.

Andersen's Pali Reader, pages 1-60.

BURMESE.

Prose.

Withandya Jataka.

Poetry.

Loka-Sara Son-ma-sá, prepared from original Manuscripts, under the auspices of the Vernacular Text-book Committee, Rangoon.

Grammar.

Lousdale's Burmese Grammar.

TAMIL.

Poetry.

Tamil Poetical Anthology, No. II, pages 15 to the end.

Prose.

The Panchatantra ... Parts I, II and III.

KHASI.

(FOR FEMALE CANDIDATES.)

H. Roberts ... ... Khasi Grammar.
John Roberts ... ... Fourth Reader.
The Book of Job.

ARABIC.

Selections by Shams-ul-Ulama Ahmad.

PERSIAN.

New Selections by Shams ul-Ulama Ahmad (prescribed for 1904-1908).

URDU.

Revised Selections by Shams-ul-Ulama Ahmad.

One paper to be set on the text-books in each of the Oriental languages (including questions on Grammar and Idiom, and easy sentences to be translated into English); and one paper containing (*i*) simple passages in English to be translated into one of the vernaculars of India* recognized by the Senate (the pasages being taken from a newspaper or other current literature of the day), and (*ii*) a subject for original composition in one of the vernaculars recognized by the Senate. Half the value of the paper is to be assigned to the passages in English and half to the subject for original composition.

HISTORY.

Sir William Lee-Warner ... The Citizen of India.
George Townsend Warner ... A Brief Survey of British History.
Adhar Chandra Mukerjee ... A Short History of the [illegible] People.

* The vernaculars recognised by the Senate are the following: [illegible] Hindi, [illegible] Urdu Burmese Armenian, Parbatia, Assamese, Telugu, Gujrathi, Khasi and Tamil.

GENERAL AND PHYSICAL GEOGRAPHY.

Clarke	... ...	Class Book of Geography, omitting all the paragraphs headed (*a*) "Communications," (*b*) "Historical Sketch," (*c*) "Animals," "Plants," and "Minerals;"
		or
Christian Literature Society		Manual of Geography (revised edition), omitting all the paragraphs either headed as follows, or dealing with the following subjects: (*a*) Railways, Canals, Roads; (*b*) History; (*c*) Animals, Vegetables, Minerals,
		and
Huxley	... ...	Science Primer—Introductory, Arts. 12-55,
		and
Geikie	... ...	Physical Geography Primer.

DRAWING.*

Freehand.

Poynter's South Kensington Drawing Books, First Grade Ornament, Books I-VI, and Freehand Elementary Design, Books I-II.

Model Drawing.

Owen Gibbons	...	A Guide to Model Drawing, published by John Marshall & Co., 42 Paternoster Row, London.

F. A. EXAMINATION, 1905.

ENGLISH.

Milton	... ...	Comus.
Wordsworth	... ...	Selections by Webb, Part I (Macmillan's Series).
Tennyson	... ...	Enoch Arden.
Addison	... ...	Selections from the "Spectator" by Airy.
Blackie	... ...	Self-culture.

Some subject for original composition to be set in one of the papers.

GREEK.

Herodotus	... ...	Book VII.
Euripides	... ...	Troades (edited by R. Y. Tyrrell, LL.D.)

LATIN.

Virgil	... ...	Æneid, Book I.
Cicero	... ...	Pro Milone (Macmillan & Co.'s Classic Series).

With passages from Latin authors not prescribed beforehand to be translated into English.

FRENCH.

H. E. Berthon	...	Specimens of Modern French Verse (Macmillan's Foreign School Classics) pages 1-68.
Madame De Stail	...	Le Directoire (Pitt Press Series).

GERMAN.

Schiller	... ...	Wallensteins Tod, edited by Karl Breul (Pitt Press Series).
Goethe	... ...	Die Italienische Reise, edited by Prof. Fiedler (Macmillan).

HEBREW.

Genesis.
Ruth.
Psalms I—XLI.

---

* 1. Free-hand—
The candidate will be required to draw correctly, in outline, straight lines, simple and compound curves. Drawing to be enlarged or reduced to a given size.
2. Model drawing—
By "Model drawing" the delineation of "Geometric solids or common objects from nature" is to be understood.
The candidate will be required to draw correctly, in outline, Geometric solids, as the cube, triangular, square, and hexagonal prisms, the cylinder and cone—the solids to be arranged in groups of two or three in combination with common objects without ornamentation, as vases, lotas, buckets, stools, &c.
Drawing to be not less than eight inches in height.
One paper to be set in this subject.

ARMENIAN.

Prose.

I.—Eghishe's History of the Wars of the Vardons (Fifth Century), Parts I, V, VI, and last ten pages of the Supplement.

II.—A Course of reading in classical Armenian for advanced students by Elisha. (Selections from ancient and modern classical authors.)

Poetry.

1. Joseph declaring himself to his brothers, pages 117-121.
2. The Mother and Daughter, pages 191-194.
3. The Shepherd and Shepherdess, pages 212-216.

SANSKRIT.

Kálidása	...	Raghuvansa, Cantos I—VI.
Bhartrihari	...	Bhatti Kavya, Cantos I and II.

BENGALI FOR FEMALE CANDIDATES.

Akshaykumar Datta	...	Charupátha, Part III.
Madhusudan Datta	...	Meghnád-Badha, Canto IV.
Nabinchandra Das	...	Raghuvansa, Canto XIII.

PALI.

Andersen's Pali Reader—The whole.

ARABIC.

Selections by Lieut.-Col. G. S. A. Ranking, M D., I.M.S., omitting pages 115 to 184.

PERSIAN.

New selections by Shams-ul-Ulama Ahmad (prescribed for 1904-1908).

URDU FOR FEMALE CANDIDATES.

Musaddasi Hali	...	The whole.
Abi Hayat	...	Pages 237-264.
Maulavi Mohamed Ihsânullah's Târikh-ul-Islam		„ 238-269.
Arayeshi Mahfil	...	„ 4-36.
Urdu Moalla	...	„ 5-37.

KHASI FOR FEMALE CANDIDATES.

Khasi Grammar ... ... By the Rev. H. Roberts, published by Messrs. Kegan Paul, Trench, Trübner & Co., London.

The Books of Proverbs and Ecclesiastes from the Khasi Bible.

Ka Kitab Jingphawar (Khasi Proverbs and Folklore) by Babu Rabon Sing, published at the "Ri Khasi Press," Shillong.

ELEMENTARY PHYSICS.

Ganot ... ... Popular Natural Philosophy, 8th edition, Book I, omitting Articles 12, 13, 32-35, 49-52, 56, 61-75; Book II, omitting Articles 107-110; Book III, omitting Articles 124-131, 137-140, 155 (Diving Bell); Book IV to be omitted altogether; Book V, omitting Articles 212, 213, 224, 225, 238, 243, 244, 245, 255, 263-265, 271-302, 306, 307, 308-310; Book VI, omitting Articles 360, 370-379, 381-383, 386, 387-401; Book VII, omitting Articles 409, 411, 412-415; Book VIII, omitting Articles 422, 435, 436, 463, 464-474, 489, 490, 499, 505, 506, 507-510, 524-532, 535, 536-541, 544, 551, 552.

ELEMENTARY CHEMISTRY.

The following book is recommended:—

S. Parrish ... ... Chemistry for Organised Schools of Science, 1900 (Macmillan & Co.).

BOTANY FOR FEMALE CANDIDATES.

Oliver's First Book of Indian Botany; the whole of Part I and Chapter I of Part II, viz., the Elements of Morphology and Physiology of Flowering Plants, the principles of their Natural Classification, and the Diagnosis and detailed accounts of the following Natural Orders:—

1. Anonaceæ.
2. Rutaceæ.
3 Meliaceæ.
4. Leguminosæ.
5. Cucurb taceæ.
6 Rubiaceæ.
7. Compositæ
8. Apocynaceæ.
9. Euphorbiaceæ.
10. Scitamineæ.
11. Palmaceæ.
12. Gramineæ.

HISTORY.

Creighton ... ... Primer of the History of Rome.
Fyffe ... ... Primer of the History of Greece

LOGIC.

The following book is recommended to be used in studying the subject of Logic as defined by the Syllabus prescribed:—

Jevons ... ... Primer of Logic, sections I-XIV, XXV-XXVI.

SANITARY SCIENCE.

The following books are recommended to be used in studying the subject as defined by the Syllabus prescribed:—

Col. K. P. Gupta ... Elements of Sanitary Science and Practical Hygiene for the F A. Course.
Dr. Banks ... ... Manual of Hygiene for Use in India.

PHYSIOLOGY.

John Gray M'Kendric ... Elementary Physiology (William and Robert Chambers), omitting Division II (Histology) and Chapters 13 (only the portion on Hearing), 14, and 15 of Division III.

MATHEMATICS.

Ashutosh Mukhopadhyay ... Geometry of Conics, omitting—
Chapter I —Propositions III, VIII, IX, XIII, XV-XXIII, XXV.
Chapter II.—Propositions VI, VII, XI-XIII, XVI, XVIII-XXXV.
Chapter III.—Propositions V, VI, IX-XXVI, XXVIII-XXXVII, and the section on the Equilateral Hyperbola.

B A EXAMINATION, 1905.

ENGLISH.

PASS COURSE.

Shakespeare ... .. Merchant of Venice; Julius Cæsar.
Milton ... ... Lycidas; Il Penseroso, L'Allegro; Sonnets.
Palgrave ... ... Golden Treasury of Songs and Lyrics, Book IV.
Burke ... ... Reflections on the French Revolution.

Typical selections from English writers, Volume II, 2nd edition, pages 242 to the end (Clarendon Press Series).

HONOUR COURSE.

(In addition to the subjects for the Pass Course.)

Spenser ... ... The Faery Queene, Book II.
Keats ... ... Hyperion.
Lamb ... ... Essays of Elia (First Series).

Permanent subjects.

Earle ... ... Philology of the English Tongue.
Shaw ... ... Outlines of English Literature.

GREEK.

PASS COURSE.

Sophocles	...	Ajax; Electra.
Demosthenes	...	On the Peace, Second Philippic, On the Chersonesus, and Third Philippic (Macmillan & Co.'s Classical Series).

HONOUR COURSE.

(In addition to the subjects for the Pass Course.)

Thucydides	...	Book II.
Euripides	...	Bacchæ.
Plato	...	Phædo.

Permanent subject.

Peile	...	Primer of Philology.

LATIN.

PASS COURSE.

Livy	...	Books XXI and XXII.
Horace	...	Odes, Books I and II.
Cicero	...	The Catiline Orations (Macmillan & Co.'s Classical Series).

HONOUR COURSE.

(In addition to the subjects for the Pass Course.)

Lucretius	...	Book I.
Virgil	...	Bucolics (omitting the 2nd).
Tacitus	...	Germania and Agricola.
Terence	...	Phormio.

Permanent subject.

Peile	...	Primer of Philology.

FRENCH.

FOR FEMALE CANDIDATES.

Pass Course.

Racine	...	Athalia.
H. E. Berthon		Specimens of Modern French Prose (Macmillan & Co.).
G. Masson	...	French classics, Vol. IV (Clarendon Press). A selection from the letters of Mme. de Sèvigné and her contemporaries (the first 40 letters of Mme. de Sèvigné and the Lettres Choisies des Contemporains).

HONOUR COURSE.

(In addition to the subjects for the Pass Course.)

Molière	...	Le Médecin Malgré Lui.
Corneille	...	Horace.
Fasnacht	...	Select Specimens of the Great French Writers, 17th, 18th and 19th Centuries (Macmillan).

Permanent subject.

Darmesteter	...	Historical French Grammar (Macmillan & Co.).

HEBREW.

PASS COURSE.

Samuel, I and II.	Psalms, XC-CL.
Chronicles, I and II.	Proverbs.

HONOUR COURSE.

(In addition to the subjects for the Pass Course.)

Isaiah.
Ezekiel.
The History of the Hebrew Language and Literature.

SANSKRIT.

PASS COURSE.

Kálidása	...	Kumárasambhava, Cantos I—V.
Sriharsha	...	Ratnábali (text as fixed in Pandit Krishnanáth Nyáypanchánan's edition).
Kálidása	...	Meghadúta.
Kálidása	...	Sakuntalá (text as fixed in Pandit Iswarachandra Vidyáságar's edition).

HONOUR COURSE.

(*In addition to the subjects for the Pass Course.*)

Bhavabhúti	...	Uttararámcharita.
Bháravi	...	Kirátárjuníya, Cantos I—IV.

Permanent subjects.

Baradá-Rája	...	Laghukaumudi (Dr. Ballantyne's edition, as reprinted by Lazarus & Co., pages 1-282, *i.e.*, to the end of *Tinanta*).

PALI.

PASS COURSE.

Poetry.

Dhammapada.
Khuddaka Patha.

Prose.

Milindapañha, pages 1-211.

HONOUR COURSE.

(*In addition to the subjects for the Pass Course.*)

Mahavanisa	...	Chapters 1-38.
Dighanikâya	...	Suttantas 3-8 (pages 81-177).
Rhys Davids	...	Buddhist India.

Permanent subject.

Whitney's Science of Language.

ARABIC.

PASS COURSE.

Tarikhul Khulafa	...	From the Caliphat of Saffâh to that of Wâseq (both inclusive).
Mustatrâf	...	Chaps. I-V and X-XVI.
Hamasah	...	Pages 1-35 (edition of 1856).
Diwan-i-Mutanabbi	...	First 56 pages (Hughli edition of 1841).

HONOUR COURSE.

(*In addition to the subjects for the Pass Course.*)

Maqamat-i-Hariri	...	First 10 Maqamahs.
Tarikh-i-Timuri	...	From the beginning to the end of the quotation from Tarikhi-Ibn-ush Shihnat, pages 1-195 (Lahore edition, 1870).
Hamasah	...	Pages 26-74 (edition of 1856).
Banat Suad	...	The whole.

PERSIAN.

PASS COURSE.

Revised Selections by Shams-ul-Ulama Ahmad.

HONOUR COURSE.

(*In addition to the subjects for the Pass Course.*)

Akbarnâmâh	...	Vol. III, from the beginning to the end of the 20th year of Akbar's reign.
Hafiz	...	From the beginning to the end of Radifi Dal.
Waqai-i-Niamat Khan-i-Ali	...	From the beginning of Waqái dated 18th Shâban to the end of the book (pages 85-154, Newal Kishore's edition).
Masnaviyat of Maulana Rumi	...	From the beginning to the end of the story of Nakhchîran and Khargôsh.

MENTAL AND MORAL SCIENCE.

(*a*) The following books are recommended to be used in studying the subject of Mental and Moral Science as defined by the Syllabus prescribed :—

PASS COURSE.

Psychology.

Any *one* of the following—

Sully	Outlines of Psychology (new edition).
James	Text-book of Psychology.
Höffding ...	Outlines of Psychology.
Maher	Psychology.
Dewey	Psychology.
H. Stephen ...	Elements of Psychology.

Logic.

Bain	Logic, Introduction, Books II, III, IV, V (Chapter 5 only), VI;
	or
Mill	System of Logic, Introduction; Book I, Chapter VIII; Book II (omitting Chapter VII); Book III (omitting Chapters XVII, XVIII, XIX, XXV); Book IV, Chapters VII, VIII; Book V, Chapters IV, V;
	or
Carveth Read ...	Logic, Inductive and Deductive.

Ethics.

Any *one* of the following—

Calderwood ...	Hand-book of Moral Philosophy.
James Seth ...	A Study of Ethical Principles.
D'Arcy ...	Short Study of Ethics.
Janet ...	Theory of Morals.
Martineau ...	Types of Ethical Theory, Vol. II, Book I, Book II, Branches I and II.
Mackenzie ...	Manual of Ethics.
Mohit Chandra Sen ...	The Elements of Moral Philosophy.

HONOUR COURSE.

Psychology.

Any *one* of the following—

Sully	Outlines of Psychology (new edition).
James	Text-book of Psychology.
Höffding ...	Outlines of Psychology.
Maher	Psychology.
Dewey	Psychology.
H. Stephen ...	Elements of Psychology.

Logic.

Bain	Logic, Introduction, Books II, III, IV, V (Chapter 5 only), VI;
	or
Mill	System of Logic, Introduction : Book I, Chapter VIII; Book II (omitting Chapter VII); Book III (omitting Chapters XVII, XVIII, XIX, XXV); Book IV, Chapters VII, VIII; Book V, Chapters IV, V;
	or
Carveth Read ...	Logic, Inductive and Deductive.

Ethics.

Any *one* of the following—

Calderwood ...	Hand-book of Moral Philosophy.
James Seth ...	A Study of Ethical Principles.
D'Arcy	Short Study of Ethics.
Janet	Theory of Morals
Martineau ...	Types of Ethical Theory, Vol. II, Book I, Book II, Branches I and II.
Mackenzie ...	Manual of Ethics.
Mohit Chandra Sen ...	The Elements of Moral Philosophy.

History of Philosophy.

(GENERAL.)

Ueberweg ...	...	History of Philosophy, Vol. II;
		or
Erdmann ...	...	History of Philosophy, Vol. II;
		or
Weber ...	...	History of Philosophy (English Translation by F. Thilly), Introduction and Modern Philosophy.

(SPECIAL.)

Leibnitz ...	...	Monadology, as translated by Dr. R. Latta in the Clarendon Press Series, being pages 215-277 of the Volume.

Natural Theology.

Martineau ...	...	A study of Religion (2nd edition).

(*b*) The following books are recommended for purposes of reference :—

Hamilton ...	...	Lectures in Metaphysics.
Mansel ...	...	Metaphysics.
Mill ...	...	Examination of Hamilton's Philosophy.
M'Cosh ...	...	Examination of J. S. Mill's Philosophy.
Bain ...	...	Mental and Moral Science.
Spencer ...	...	Principles of Psychology.
Spencer ...	...	First Principles.
Ward ...	...	"Psychology" (Encyclopædia Britannica).
Sully ...	...	The Human Mind.
Carpenter .	...	Mental Physiology.
Ladd ...	...	Elements of Physiological Psychology.
Green ...	...	Philosophical Works, Vols. I, II, and III, Prolegomena to Ethics.
Martineau ...	...	A Study of Religion.
Ueberweg ...	...	System of Logic and History of Logical Doctrines.
Jevons ...	...	Principles of Science.
Venn ...	...	Logic of Chance; Empirical Logic.
Sigwart ...	...	Logic (English Translation).
Bradley ...	...	Principles of Logic.
Sidgwick ..	...	Methods of Ethics.
Sidgwick ...	...	Outlines of the History of Ethics.
Martineau ...	...	Types of Ethical Theory.
Mill ...	...	Utilitarianism.
Flint ...	...	Theism.
Flint ...	...	Anti-Theistic Theories.
Caird ...	...	Introduction to the Philosophy of Religion.
Stirling ...	...	Gifford Lectures—Philosophy and Theology.
Lotze ...	...	Outlines of the Philosophy of Religion (translated by Ladd).
Windelband	...	History of Philosophy.
Schwegler ...	...	History of Philosophy.
Falkenberg	...	History of Modern Philosophy.

The examination in Mental and Moral Science shall be on the subject as defined by the Syllabus and shall not necessarily be confined to the books recommended to be used in studying the subject.

MATHEMATICS.

PASS COURSE.

Loney ...	...	Elements of Statics and Dynamics.
Greaves ..	...	Hydrostatics, Chapters I—VIII (omitting Articles 24-34, 37-39, 47, 57, 62-66, 72, 80, 90, 101, 106 109-110, 114-120),

(or the corresponding portions of S. B. Mukerjee's Elementary Hydrostatics).

Parker ...	...	Elements of Astronomy (omitting Chapter XIV).

HONOUR COURSE.

Loney ...	...	Elements of Statics and Dynamics.
Maxwell ...	...	Matter and Motion, Chapter III, and Articles 96 and 97 only.
Greaves ...	...	Hydrostatics, Chapters I-VIII (omitting Articles 32-34, 72, 101, 106, 109-110, 114-120),

(or the corresponding portions of S. B. Mukerjee's Elementary Hydrostatics).

Parker	...	... Elements of Astronomy, omitting Chapter XIV.
Salmon	...	... Conic Sections (6th edition), Chapters I-III, V-VIII, to the end of Article 116, and Chapters X-XIII, (or ony other book covering the same ground).
Williamson	...	... Differential Calculus (9th edition), Chapters I-V, IX, XI-XVIII.
Edwards	...	... Integral Calculus for Beginners, Chapters I-X.

HISTORY.

PASS COURSE.

History of England.

Gardiner	...	... Students' History of England.

History of India and History of Hindu Civilisation.

Elphinstone	...	... History of India, omitting Book XII and the Appendices.
Meadows Taylor		... Students' Manual of the History of India from Book IV, Chapter XXVII, to the end.

History of Muhammadan Civilisation.

Ameer Ali	...	... A short History of the Saracens, Chapters XV-XXII.

Histories of Greece and Rome.

Bury	...	... History of Greece (Macmillan & Co.).
Shuckburgh	...	... History of Rome.

Political Economy.

Fawcett	...	.. Manual of Political Economy.

HONOUR COURSE.

History of England.

Gardiner	...	... Students' History of England.
Green	...	... Short History of the English People, Chapters VII, VIII, and IX, constituting Part III of the reprint of Green's History in four parts.
Bagehot	...	... The English Constitution.

History of India and History of Hindu Civilisation.

Elphinstone	...	... History of India to the end of Book XI, including the Appendices.
Meadows Taylor		... Students' Manual of the History of India from Book IV, Chapter XXVII, to the end.

History of Muhammadan Civilisation.

Ameer Ali	...	... A short History of the Saracens, Chapters XV-XXII.

Histories of Greece and Rome.

Bury	...	... History of Greece (Macmillan & Co.).
Shuckburgh	...	... History of Rome.

Political Economy.

Fawcett	...	... Manual of Political Economy.
Marshall	...	... Economics of Industry.

Political Philosophy.

Mill	...	... On Representative Government.

MATHEMATICAL AND EXPERIMENTAL PHYSICS.

PASS COURSE

Ganot	...	... Physics (16th edition, 1902).

General properties of Matter.—Omitting Books I, II, III, IV, *with the exception of* Articles 85, 86, 87, 88, 89, 96, 181, 182.

Sound.—The whole book is to be read.

Heat.—Omitting Articles 363, 394, 395, 408, 447, 480, 481, 482, 483, 491, 492, 493, 494, 507, 508, 509.

Light.—Omitting Articles 592, 603, 620, 621, 622, 623, 624, 626, 627, 631, 632, 634, 640, 641, 642, 645, 647, and Chapter VIII.

Magnetism.—Omitting Articles 722, 723, 724, 725, 736, 738, 740.

Frictional and Voltaic Electricity.—Omitting Articles 773, 775, 777, 797, 798, 801, 810, 811, 861, 862, 898, 899, 900, 902, 904, 905, 906, 907, 913, 918, 924–932, inclusive, 943, 965, 968, 969, 970, 985; Chapters XIII, XIV down to 1003; XV, and all the rest.

HONOUR COURSE.

Ganot	...	... Physics (16th edition, 1902), omitting Chapter XV of Book X and the Elements of Meteorology.
S P. Thompson		... Elementary Lessons on Electricity and Magnetism.
Tait	...	... Heat.
Jevons	...	... Principles of Science (2nd edition), omitting Books I and II.

CHEMISTRY.

The following books are recommended to be used in studying the subject of Chemistry as defined by the Syllabus prescribed:—

PASS COURSE.

Newth	...	... A text-book of Inorganic Chemistry (latest edition).

HONOUR COURSE.

Newth	...	... A text-book of Inorganic Chemistry (latest edition).
Tilden	...	... Introduction to the Study of Chemical Philosophy (latest edition).
Perkin and Kipping		... Organic Chemistry (Part I).
Chapman Jones		... Practical Inorganic Chemistry for Advanced Students,
		or
Newth	...	... Manual of Chemical Analysis.
Jevons	...	... Principles of Science (2nd edition), omitting Books I and II.

The examination in Chemistry shall be on the subject as defined by the Syllabus, and shall not necessarily be confined to the books recommended to be used in studying the subject.

BIOLOGY.

PHYSIOLOGY AND BOTANY

PASS COURSE.

Huxley	...	... Elementary Lessons in Physiology, edited by Sir M. Foster.
Reynolds Green		... Text-book of Botany.
Oliver	...	... First Book of Indian Botany.

PHYSIOLOGY AND ZOOLOGY.

PASS COURSE.

Huxley	...	... Elementary Lessons in Physiology, edited by Sir M. Foster.
Parker	...	... Lessons in Elementary Biology.
Parker and Haswell		... A Manual of Zoology.

PHYSIOLOGY, BOTANY, ZOOLOGY, AND THE DOCTRINE OF SCIENTIFIC METHOD.

HONOUR COURSE.

Kirke	...	... Hand-book of Physiology, edited by Professor Haliburton.
Parker and Haswell		... A Manual of Zoology.
Haddon	...	... Introduction to the Study of Embryology.
Reynolds Green		... Text-book of Botany:
Stirling	...	... Outlines of Practical Histology,
Bower	...	... Practical Botany for Beginners (Macmillan & Co.).
Parker and Parker		... Practical Zoology (Macmillan & Co.).
Jevons	...	... Principles of Science (2nd edition), omitting Books I and II.

GEOLOGY.

GEOLOGY AND PHYSICAL GEOGRAPHY.

PASS COURSE.

Geikie	...	... Class-book of Geology.
Cole	...	... Aids to Practical Geology.
Mill	...	... The Realm of Nature (University Extension Manuals).
Medlicott and Blanford		... Manual of the Geology of India (2nd edition) by R. D. Oldham, A.R.S.M.

GEOLOGY AND MINERALOGY.

PASS COURSE.

Geikie	...	... Class-book of Geology.
Cole	...	... Aids to Practical Geology.
Medlicott and Blanford		... Manual of the Geology of India (2nd edition) by R. D. Oldham, A.R.S.M.
Rutley	...	... Mineralogy.
Rutley	...	... Rock-forming Minerals.

GEOLOGY, MINERALOGY, PHYSICAL GEOGRAPHY, AND THE DOCTRINE OF SCIENTIFIC METHOD.

HONOUR COURSE.

Geikie	...	... Text-book of Geology.
Cole	...	... Aids to Practical Geology.
Medlicott Blanford		... Manual of the Geology of India (2nd edition) by R. D. Oldham, A.R.S.M.
Rutley	...	... Mineralogy.
Rutley	...	... Rock-forming Minerals.
Alfred Harker		... Petrology for Students, Cambridge, 1895 (Cambridge Natural Science Manuals).
Geikie	...	... Atlas of Physical Geography.
Nicholson and Lydekkar		... Palæontology.
Jevons	...	... Principles of Science (2nd edition), omitting Books I and II.

B.Sc. EXAMINATION, 1905.

MATHEMATICS.

PASS COURSE.

Subject II—Statics and Dynamics—

Loney ... ... Elements of Statics and Dynamics.

Subject X—Hydrostatics and Astronomy—

Greaves ... ... Hydrostatics, Chapters I—VIII (omitting Articles 24-34, 37-39, 47, 57, 62-66, 72, 80, 90, 101, 106, 109-110, 114-120),

(or the corresponding portions of S. B. Mukerjee's Elementary Hydrostatics).

Parker ... ... Elements of Astronomy (omitting Chapter XIV).

HONOUR COURSE.

Subjects II and X—

Loney	...	... Elements of Statics and Dynamics.
Maxwell	...	... Matter and Motion, Chapter III, and Articles 96 and 97 only.
Greaves	...	... Hydrostatics, Chapters I-VIII (omitting Articles 32-34, 72, 101, 106, 109-110, 114-120),

(or the corresponding portions of S. B. Mukerjee's Elementary Hydrostatics).

Parker	...	... Elements of Astronomy, omitting Chapter XIV.
Salmon	...	... Conic Sections (6th edition), Chapters I—III, V—VIII, to the end of Article 116, and Chapters X—XIII,

(or any other book covering the same ground).

Williamson	...	... Differential Calculus (9th edition), Chapters I-V, IX, XI—XVIII.
Edwards	...	... Integral Calculus for Beginners, Chapters I-X.

MATHEMATICAL AND EXPERIMENTAL PHYSICS.

THEORETICAL PORTION.

PASS COURSE.

Ganot ... ... Physics (16th edition, 1902).

General properties of Matter.—Omitting Books I, II, III, IV, *with the exception of* Articles 85, 86, 87, 88, 89, 96, 181, 182.

Sound.—The whole book is to be read.

Heat.—Omitting Articles 363, 394, 395, 408, 447, 480, 481, 482, 483, 491, 492, 493, 494, 507, 508, 509.

Light.—Omitting Articles 592, 603, 620, 621, 622, 623, 624, 626, 627, 631, 632, 634, 640, 641, 642, 645, 647, and Chapter VIII.

Magnetism.—Omitting Articles 722, 723, 724, 725, 736, 738, 740.

Frictional and Voltaic Electricity.—Omiting Articles 773, 775, 777, 797, 798, 801, 810, 811, 861, 862, 898, 899, 900, 902, 904, 905, 906, 907, 913, 918, 924–932 inclusive, 943, 965, 968, 969, 970, 985, Chapters XIII, XIV down to 1003, XV and all the rest.

HONOUR COURSE.

Ganot	...	... Physics (16th edition, 1902), omitting Chapter XV of Book X and the Elements of Meteorology.
S. P. Thompson		... Elementary Lessons on Electricity and Magnetism.
Tait	...	... Heat.
Jevons	...	... Principles of Science (2nd edition, omitting Books I and II).

PRACTICAL EXAMINATION.

No text-books are prescribed. The examination will be conducted with reference to the following syllabus:—

PASS COURSE.

[*About 10 lessons.*]

Use of Logarithm Tables.
Method of drawing curves.
Construction of Scales and Verniers.
Measurement of Length by { Calliper. Screw-gauge. Spherometer. Verniers.
Measurement of Areas by plotting on curve paper.
Measurement of Angles by { Protractors. Verniers.
Laws of simple Pendulum. Value of g.
Atwood's Machine.
Use of Balance—Sp. gr. of solids heavier than water.
„ „ lighter than water.
„ liquids by sp. gr. bottle.
Verification of Law of Archimedes.
Nicholson's Hydrometer.
Hare's apparatus for specific density of liquids.

[*About 8 lessons.*]

Temperature corrections of Barometer.
Boyle's Law.
Melting point of solids.
Determination of fixed points of Thermometers.
Water equivalent of Calorimeters.
Specific heat of solids.
Latent heat of water.
Latent heat of steam.

(*2 lessons.*)

Sound—
Velocity of sound by resonance columns.
Sonometer. Verification of its laws.

(*5 lessons.*)

Light—
Laws of reflection.
Plain and Concave Mirrors. Focal Length and Radius of curvature of Concave Mirrors.
Bunsen's and Rumford's Photometers.
Refractive index of glass plates.
Focal length of Convex lenses.
Production of a pure Spectrum.

(*4 lessons.*)

Magnetism—
Simple laws of Magnetism.
Methods of Magnetisation.
Construction of Magnetic curves.
Comparison of Magnetic moments.
Simple measurement of Dip.

(*4 lessons.*)

Electro-statics. Simple Laws. Electroscopes.
Experiments on Induction. Phenomena of a Hollow Conductor.
Ordinary Frictional and Influence Machines.
Leyden Jars.

(*6 lessons.*)

Use of Primary and Secondary Cells.
Magnetic effect of currents, Ampere's rule, &c.
Tangent Galvanometers.
Measurement of Resistance by Metre Bridge.

HONOUR COURSE.

All the Experiments in the Pass Course.
Laws of Inclined Plane.
Laws of Friction.
Verification of Hooke's Law—"*ut tensio sic vis.*"
Use of Balance—
Weighing by oscillations, with accuracy.
Borda's method of weighing.
Corrections for air displaced.

Measurement of linear co-efficient of expansion of solid metals.
Measurement of co-efficient of increase of pressure of a gas at constant volume.
Measurement of specific heat of liquids by method of cooling.
Finding of dew-point and humidity with Daniell's and Regnault's Hygrometer.
Focal length of concave lenses.
Adjustment of simple optical instruments.
Measurement of magnifying power.
Measurement of angles and refractive Index by Spectrometer.

Measurement of Magnetic dip with corrections.
Distribution of Magnetism along a Magnet.
Determination of Magnetic moment and horizontal force.

Measurement of Resistance, Current and E. M. F.
Ohm's Law. Shunts. Ammeter and Voltmeter (calibration of).
Electro-chemical equivalents of copper and water.
Determination of galvanometer constants.
Elementary knowledge of the working of dynamos.

CHEMISTRY.

The following books are recommended to be used in studying the subject of Chemistry as defined by the Syllabus prescribed:—

PASS COURSE.

Newth	...	A Text-book of Inorganic Chemistry (latest edition).
Chapman Jones	...	Practical Inorganic Chemistry for advanced students.

HONOUR COURSE.

Newth ...	...	A Text-book of Inorganic Chemistry (latest edition).
Tilden ...	...	Introduction to the Study of Chemical Philosophy (latest edition).
Perkin and Kipping	...	Organic Chemistry (Part I).
Chapman Jones	...	Practical Inorganic Chemistry for advanced students, *or*
Newth ...	...	Manual of Chemical Analysis.

The examination in Chemistry shall be on the subject as defined by the syllabus, and shall not necessarily be confined to the books recommended to be used in studying the subject.

PHYSIOLOGY.

PASS COURSE.

Huxley ...	...	Elementary Lessons in Physiology edited by Sir M. Foster.

(*For Practical Examination.*)

Haliburton ...	...	Essentials of Chemical Physiology. Blood, Milk, Albumen, Digestive Juices, Urine (normal) and Glycogen.
Stirling ...	...	Outlines of Practical Physiology. *Experimental Physiology.*—The Frog's Heart,—Beating of the Heart,—Effect of Heat and Cold—Section of the Heart, pages 220-224; Stannius's Experiment, page 228; The Laryngoscope—Vowels, pages 268-270; Reflex Action—Action of Poisons—Knee-jerk, pages 271-274; Eye—Formation of Image, pages 276-280; Touch, Smell, Taste, Hearing, pages 304-308.

Stirling	...	... Practical Histology,—Histology of the Kidneys, Liver, Spleen, Lungs, Endothelium, Blood, Muscle-fibre, Nerve-fibre, Cartilage, Epithelium, Adult Bone.

HONOUR COURSE.

Kirke	...	... Hand-book of Physiology, edited by Professor Haliburton.

(*For Practical Examination.*)

Haliburton	...	... Essentials of Chemical Physiology—(i) The Proteids; (ii) Blood, Hæmoglobin; (iii) Digestion—Salivary, Gastric, Pancreatic, Glycogen in the Liver; (iv) Urine—Volumetric Analysis for Urea; Sugar in Urine, Qualitative and Quantitative.
Stirling	...	... Outlines of Practical Physiology— *Experimental Physiology*—(i) Nerve-Muscle Preparation—Stimulation of Nerve—Mechanical, Chemical and Thermal Stimuli, pages 164-167; (ii) The Frog's Heart—Stannius's Experiment, pages 220-229; (iii) The Laryngoscope—Vowels, pages 268-270; (iv) Reflex Action—Action of Poisons—Knee-jerk, pages 271-274; (v) Formation of an Image, &c., pages 276-283; (vi) The Ophthalmoscope, pages 302-304; (vii) Touch, Smell, Taste, Hearing, pages 304-308.
Stirling	...	... Practical Histology—Histology of the Liver, Spleen, Kidneys, Endothelium, Blood, Muscle-fibre, Nerve-fibre, Bone, Cartilage, Heart-muscle, Epithelium, Ovary, Stomach, Small Intestines, Large Intestines, Spinal Cord.

BOTANY.

PASS COURSE.

Reynolds Green		... Text-book of Botany.
Oliver	...	... First Book of Indian Botany.
Bower	...	... Practical Botany for Beginners (Macmillan & Co), pages 1-51, 76-107, 125-133, 150-178, 223-235, 244, 245.

HONOUR COURSE.

Reynolds Green		... Text-book of Botany.
Reynolds Green		... Physiology of Plants.
Bower	...	... Practical Botany for Beginners (Macmillan & Co).

ZOOLOGY.

PASS COURSE.

Parker	...	... Lessons in Elementary Biology.
Parker and Haswell		... A Manual of Zoology.
Parker and Parker		... Practical Zoology (Macmillan & Co.)—Dissection of the Leech, the Prawn and the Frog.

HONOUR COURSE.

Parker and Haswell		... A Manual of Zoology.
Haddon	...	... Introduction to the Study of Embryology.
Parker and Parker		... Practical Zoology (Macmillan & Co.).

GEOLOGY.

PASS COURSE.

Geikie	...	... Class-book of Geology.
Cole	...	... Aids to Practical Geology
Medlicott and Blanford		... Manual of the Geology of India (2nd edition), by R. D. Oldham, A. R. S. M.

HONOUR COURSE.

Geikie	...	... Text-book of Geology.
Cole	...	... Aids to Practical Geology.
Nicholson and Lyddeker		... Palæontology.
Medlicott and Blanford		... Manual of the Geology of India (2nd edition), by R. D. Oldham, A. R. S. M.

MINERALOGY.

PASS COURSE.

Rutley	...	... Mineralogy.
Rutley	...	... Rock-forming Minerals.
Cole	...	... Aids to Practical Geology.

HONOUR COURSE.

Rutley	...	... Mineralogy.
Rutley	...	... Rock-forming Minerals.
Alfred Harker		... Petrology for Students, Cambridge, 1895 (Cambridge Natural Science Manuals).
Cole	...	... Aids to Practical Geology.

M. A. EXAMINATION, 1904.

MENTAL AND MORAL SCIENCE.

The following books are recommended to be used in studying the subject of Mental and Moral Science as defined by the Syllabus prescribed : —

GENERAL.

Ward	...	... "Psychology" (*Encyclopædia Britannica*).
Spencer	...	... Principles of Psychology.
Ladd	...	... Outlines of Physiological Psychology.
Mill	...	... System of Logic.
Venn	...	... Empirical Logic.
Sidgwick	...	... Methods of Ethics.
Martineau	...	... Types of Ethical Theory.
Caird	...	... Introduction to the Philosophy of Religion.
Martineau	...	... A Study of Religion, 2nd edition.
Ward	...	... Gifford Lectures (Naturalism and Agnosticism), 1896—1898.
Green	...	... Prolegomena to Ethics.
Aristotle	...	... Politics (English Translation by Jowett or Welldon).
Uberweg	...	... History of Philosophy.
Erdmann	...	... History of Philosophy, Vols. I and II.
Mádhaváchárya		... Sarva-darshana Sangraha, translated by Cowell and Gough (the Nyáya, Chárvaka, Sánkhya, and Bauddha systems).
Vyása and Sankara		... Vedánta Sutras with Bháshya, as in Part I of George Thibaut's Translation—Introduction only, pages i—xxx.

SPECIAL.

Kant	...	... Transcendental Analytic, Book I (Analytic of Concept, as in Max Müller's translation of Kant's Critique of Pure Reason).

The examination in Mental and Moral Science shall be on the subject as defined by the Syllabus, and shall not necessarily be confined to the books recommended to be used in studying the subject.

MATHEMATICS.

Group A.

Hall and Knight		... Higher Algebra, Chapters XIX—XXXIV.
Todhunter	...	... Trigonometry, edited by Hogg.
Todhunter	...	... Spherical Trigonometry (as revised by J. G. Leathem, M.A., D SC.).
Burnside and Panton		... Theory of Equations (4th edition), omitting Chap. XX.
Salmon	...	... Conic Sections.
Salmon	...	... Geometry of three Dimensions—the Course selected by Dr. Salmon for Junior Readers.
Williamson	...	... Differential Calculus (9th edition).
Williamson	...	... Integral Calculus (7th edition).
Murray	...	... Introductory Course in Differential Equations.
Todhunter	...	... Analytical Statics, Ed. Everett.
Williamson and Tarleton		... Dynamics (2nd edition), Chapters I—VIII.
Minchin	...	... Hydrostatics and Elementary Hydrokinetics, omitting Chapter VIII.
Godfray	...	... Astronomy.
Newton	...	... Principia, Sections I, II, III.

GROUP B.

Salmon or Smith	...	Conic Sections, Chapters I—XIII.
Smith ...	...	Solid Geometry, omitting Chapters VII and IX.
Williamson ...	...	Differential Calculus (9th edition).
Williamson ...	...	Integral Calculus (7th edition), omitting Chapter XII.
Minchin ...	...	Statics (Vols. I and II), omitting Chapters XIV and XVI.
Routh ...	...	Dynamics of a Particle, Chapters I, II, III, IV; Chapter V, Articles 221—275, 285-286; Chapter VI, Articles 306—337, 387—404, 419—427; Chapter VII, Articles 490—510, 526, 527, 535—561.
Routh ...	...	Elementary Rigid Dynamics, Chapters I-V.
Besant ...	...	Hydro-Mechanics, Part I (Hydrostatics).
Bassett ...	...	Elementary Treatise on Hydro-Dynamics and Sound, omitting Chapters VII-VIII.
Godfray ...	...	Astronomy.
Newton ...	...	Principia, Sections I, II, III, IX, XI.

NOTE.—Candidates are recommended to read Murray's Differential Equations (short course).

NATURAL AND PHYSICAL SCIENCE.

A.—CHEMISTRY.

Mendeleéff ...	...	Principles of Chemistry, Vols. I and II. Translated by George Kamensky and edited by A. J. Greenaway.
Bernthsen ...	...	Organic Chemistry,
		or
Wade ...	...	Introduction to the Study of Organic Chemistry.
Newth ...	...	Manual of Chemical Analysis.
Ostwald ...	...	The Scientific Foundations of Analytical Chemistry (translated by G. McGowan).
Walker ...	...	Introduction to Physical Chemistry.

B.—HEAT, ELECTRICITY AND MAGNETISM AS PRINCIPAL SUBJECTS, WITH LIGHT AND SOUND AS SUBSIDIARY SUBJECTS.

Principal Subjects.

Maxwell ...	...	Elementary Treatise on Electricity.
J. J. Thomson	...	Elements of Electricity and Magnetism.
Christiansen	...	Theoretical Physics, Chapters VII—XI.
Hertz ...	...	Electric Waves.
Faraday ...	...	Experimental Researches in Electricity, Volume I.
Preston ...	...	Theory of Heat.
Maxwell ...	...	Theory of Heat (latest edition).
Fourier ...	...	Theory of Heat, Chapters I and II.
Stewart and Gee	...	Practical Physics, Volume II.
Glazebrook and Shaw	...	Practical Physics, Chapters VIII—XIII (omitting Section 31).

Subsidiary Subject.

Daniell ...	...	Text-book of the Principles of Physics (3rd edition), Chapters V, XIV, and XV.

C.—LIGHT AND SOUND AS PRINCIPAL SUBJECTS, WITH HEAT, ELECTRICITY AND MAGNETISM AS SUBSIDARY SUBJECTS.

Principal Subjects.

Preston ...	...	Theory of Light.
Heath ...	...	Elementary Treatise on Geometrical Optics.
Helmholtz ...	...	Sensations of Tone—Introduction and Chapters I—VIII.
Everett ...	...	Vibratory Motion and Sound.
Donkin ...	...	Acoustics.
Glazebrook and Shaw	...	Practical Physics, Chapters VIII—XX.
Poynting and Thompson	...	A Text-book of Physics—Sound.

Subsidiary Subjects.

J. J. Thomson	...	* Elements of Electricity and Magnetism.
Balfour Stewart	...	Heat (latest edition).

* The questions on J. J. Thomson's work shall not be so difficult as those in Group B.

D.—BOTANY.

Asa Gray	Structural Botany.
Sachs	Text-book of Botany, Book II, new edition, by Goebel, translated by Garnsey and Balfour (Clarendon Press Series).
Sachs	Lectures on the Physiology of Plants, translated by H. M. Ward (Clarendon Press Series).
Sachs	History of Botany (1530—1860), translated by Garnsey and Balfour (Clarendon Press Series).
Graf zu Solms Laubach ...	Fossil Botany, translated by Garnsey and Balfour (Clarendon Press Series).
Roxburgh	Flora Indica, Clarke's edition (for reference in identifying Indian plants).
Bower	Practical Botany.
De Bary	Comparative Anatomy of the Vegetative Organs of the Phanerogams and Ferns, translated by F. O. Bower and D. H. Scott (Clarendon Press Series).

E.—PHYSIOLOGY AND ZOOLOGY.

Michael Foster ...	Text-book of Physiology.
Arnold Lang	Text-book of Comparative Anatomy, Part I.
Wiedersheim	Comparative Anatomy of the Vertebrata.
Schäffer	The Essentials of Histology.
Stirling	Outlines of Practical Histology.
A. M. Marshall ...	Practical Zoology.
Haliburton	Essentials of Chemical Physiology.
Balfour	Comparative Embryology.
Darwin	Origin of Species.
Kirke	Hand-book of Physiology, edited by Haliburton.
Parker	Lessons in Elementary Biology.
Haddon	Introduction to the Study of Embryology.
Claus-Sedgwick ...	Elementary Text-book of Zoology, Vol. I, General Part and Special Part—Protozoa to Insecta; Vol. II, Special Part—Mollusca to Man.

F.—GEOLOGY AND MINERALOGY.

Geikie	Text-book of Geology (latest edition).
Medlicott and Blanford ...	Manual of the Geology of India (2nd edition), by R. D. Oldham, A.R.S.M.
Nicholson and Lyddekar ...	Palæontology.
Rutley	Mineralogy.
Rutley	Rock-forming Minerals.
H. Rosenbush ...	Microscopical Physiography of the Rock-making Minerals. Translated by Joseph P. Iddings, Macmillan & Co. (latest edition).
Alfred Harker ...	Petrology for Students, Cambridge, 1895 (Cambridge Natural Science Manuals).
Cole	Aids to Practical Geology.
Geikie	Atlas of Physical Geography.

M. A. EXAMINATION, 1905.

ENGLISH.

Chaucer	Clarendon Press Series (small edition), Vol. III.	
Shakespeare ...	Cymbeline, Romeo and Juliet; Antony and Cleopatra; The Tempest.	
Ben Jonson ...	Every man in his Humour.	
Milton	Paradise Lost, Books X, XI, XII.	
Dryden	Mac Flecknoe.	As in Hale's Longer Poems.
Pope	Rape of the Lock.	
Johnson	Vanity of Human Wishes, London.	
Tennyson	In Memoriam.	
Milton	Areopagitica.	
Hooker	Ecclesiastical Polity, Book I (Clarendon Press Series.)	
Carlyle	Sartor Resartus.	
Hutton	Literary Essays.	
Holmes	Professor at the Breakfast Table.	

George Eliot ...	...	Silas Marner.
Charles Kingsley	...	Sanitary and Social Lectures and Essays— The following pieces: — The Science of Health. The Two Breaths. The Air-Mothers. Great Cities and their Influence for Good and Evil. The Massacre of the Innocents. A Mad World, My Masters.

Permanent Subjects.

Morris ...	...	Historical Outlines of English Accidence.
Smith ...	...	Students' Manual of the English Language.
Taine ...	...	History of English Literature, translated by Van Laun.
Dowden ...	...	Shakespeare: a Critical Study of his Mind and Art.
Sweet ...	...	Anglo-Saxon Primer.
Sayce ...	...	Introduction to the Science of Language.

GREEK.

Homer ...	...	Iliad, Books I—XII.
Pindar ...	...	The whole.
Æschylus ...	...	Prometheus; Agamemnon; Eumenides.
Sophocles ...	...	Œdipus Tyrannus; Ajax; Antigone.
Euripides ...	...	Hecuba; Medea; Ion.
Aristophanes ...	...	Knights; Clouds; Frogs; Birds.
Herodotus ...	...	Books II and III to the end of Chap. LXVI.
Thucydides ...	...	Books VI, VII, VIII.
Demosthenes ...	...	Orations against Leptines and Meidias; De Falsa Legatione.
Plato ...	...	Republic; Theætetus.
Aristotle ...	...	Politics.

Permanent Subjects.

Sayce ...	...	Introduction to the Science of Language.
Mahaffy ...	...	History of Classical Greek Literature.

Also passages from authors not prescribed beforehand to be translated into English.

LATIN.

Virgil ...	...	Bucolics (with the exception of II); Georgics; Æneid, Books I—VI.
Horace ...	...	Odes; Epodes; Satires, I (with the exception of 2 and 8); Epistles, I; De Arte Poetica.
Juvenal ...	...	Satires (except II, VI and IX).
Persius ...	...	Satires.
Lucretius ...	...	Books I, V, and VI.
Catullus ...	...	1, 2, 3, 4, 9, 12, 22, 30, 31, 46, 49, 51, 63, 64, 65, 66.
Plautus ...	...	Aulularia; Trinummus.
Terence ...	...	Andria; Heauton Timoroumenos.
Livy ...	...	Books XXI—XXV.
Sallust ...	...	Bellum Catilinarium; Bellum Jugurthinum.
Cicero ...	...	Second Philippic; De Natura Deorum.
Tacitus ...	...	Histories.

Permanent Subjects.

Sayce ...	...	Introduction to the Science of Language.
Teuffel ...	...	History of Latin Literature.

Also passages from authors not prescribed beforehand to be translated into English.

HEBREW.

Isaiah.	Psalms.	Song of Solomon.
Jeremiah.	Proverbs.	Daniel.
Ezekiel.	Job.	Ezra.
The Minor Prophets.	Ecclesiastes.	Nehemiah.

Permanent Subjects.

Robertson Smith	...	Old Testament in the Jewish Church.
Davidson ...	...	Introduction to the Old Testament.
Ewald ...	...	History and Antiquities of Israel.
Sayce ...	...	Introduction to the Science of Language.

SANSKRIT.

GROUP A.

Srîharsha ...	...	Naisadhacharita, Cantos I—III.
Kálidása ...	...	Vikramorvasí.
Mágh ...	...	Sisupalabadh, Cantos XIII and XIV.
Bhababhúti ...	...	Mahávíracharita.
Súdraka ...	...	Mrichchhakatika.
Visákhadatta ...	...	Mudrá—Rákshasa.
Bánabhatta ...	...	Kádambari, Purvabhága.
Vyása and Sánkara	...	Vedánta—Sútra and Bháshya, first four Sútras of the 1st Adhyáya, and 1st and 2nd Pádas of the 2nd Adhyáya.
Gautama and Visvanátha	...	Nyáya Sútra and Vritti, Chapters I—IV.
Váchaspati Misra	...	Tattva—Kaumudi.
Upanishad ...	...	Katha, with Sankara Bháshya.
Rigveda ...	...	Hymns from the Rigveda Sanhitá, as edited by P. Peterson.
Vyása ...	...	Bhagavadgítá.
Pánini ...	...	Vaidika Prakriyá, Káraka, and Samása, as contained in Sidhánta—Kaumudi.
Manu ...	...	Manu—1, 2, 3, 4, 7, 8, 12.
Mammata Bhatta	...	Kávya—Prakása.
Vararuchi ...	...	Prakriaprakasa (edited by Cowell).

Permanent Subjects.

Max Müller ...	...	Science of Language, Vols. I and II.
Muir ...	...	Sanskrit Texts, Vol. V.

Students may take up the Inscriptions of Asoka instead of one of the following:—

(*a*) Nyáya-Sútra and Vritti (limited as above).
(*b*) Tattva-Kaumudi and Vedánta-Sútra (limited as above).

GROUP B.

I	Gautama and Víswanátha	...	Sútra with Vritti.
	Kanada and Sankara	...	Sútra and Upaskára.
II	Kapila and Aniruddha	...	Sútra and Vritti.
	Patanjali and Bhoja	...	Sútra and Vritti.
III	Jaimini and Savara	...	Sútra and Bháshya—Adhyayas 1, 2, and 3.
IV	Vyása and Sankara	..	Sútra with Bháshya, Adhyaya 1.
V	Vyása and Sankara—Adhyaya II.		
VI	Essay and Comparative Grammar.		

N B—Students may take up Indian Paleography and Epigraphy instead of any one of the subjects of the first five papers.

Permanent Subjects.

Max Müller ...	...	Science of Language, Vol. I—Lectures II and VI. Vol. II—Lectures IV, V, VI, and VII.
Colebrooke ...	...	Philosophy of the Hindus as given in the first volume of the works.
Max Müller ...	...	Six Systems of Philosophy.

GROUP C.

I	Gautama and Viswanátha	...	Sútra and Vritti.
	Kanada and Sankara	...	Sútra and Upaskára,
II	Viswanátha ...	...	Bhashaparicheda with Siddhanta Muktavali.
III	Udayana and Haridasa	...	Kusumanjali with Haridasa's tika.
	Gangeśa and Jayadeva		Iswaranumana with Aloka.
IV	Gangeśa and Mathuranatha		Anumiti Siddhintalakshan of Pakshata and Parámarsa.
V	Gangeśa and Mathuranatha		Avayava and Hetwabhaśa.
VI	Essay and Comparative Grammar.		

N.B.—Students may take up Indian Paleography and Epigraphy for the subjects of any one of the first five papers.

Permanent Subjects.

Max Müller's Science of Language as limited in group B.
Mill's Logic, Book III of Induction, Chapters 1 to 5 and 8.

GROUP D.

I—Vyása and Sankara	...	Sútra and Bhásya, Adhyayas I and II—1, 2.
II—Vyása and Sankara	...	Adhyayas II—3, 4; III and IV.
III—Vyása and Sankara	...	Gita with Bháshya.
IV—Appaya Dikshita Siddhanta-lesa	... ...	Dharmarajadhvarindra. Vedantaparibhasha and Vedantasara by Sarvananda.

V—Upanishads—Chhandogya and Vrihadaranyaka with Sankara Bháshya.
VI—Essay and Comparative Grammar.

N.B.—Students may take up Indian Paleography and Epigraphy for the subjects of any one of the first five papers.

Permanent Subjects.

Max Müller's Science of Language (limited as above).
Deussen—Elements of Metaphysics.

GROUP E.

I—Rigveda	... ...	Astaka I, with Sayaná's Introduction and Commentary and Aitareya Brahma Kanda I.
II—Samaveda Adhyaya I, with Sayana's Introduction and Commentary and Atharva Vedá Vratya Kanda with Sayana's Commentary.		
III—Yajurveda Vajasaneya Sanhita	... ...	Adhyayas 1 to 8 with Mahidhara's commentary and Satapatha Brahmana Kanda I, with Sayana's Commentary.

IV—Upanishads—Chhandogya and Vrihadaranyaka with Sankara's Commentary.
V—Nirukta and Vaidicprakriya as in Siddhanta Kaumudí.
VI—Essay and Comparative Grammar,

N.B.—Students may take up *Gupta and Kutilalipi* instead of any one of the following:—

(*a*) Chhandogya Upanishad with commentaries.
(*b*) Vrihadaranyaka Upanishad with commentaries.

Permanent Subjects.

Max Müller's Science of Language.
Sir William Muir, Vol. V.
Weber's History of Sanskrit literature so far as it is concerned with the Vedas.

PALI.

Digha Nikāya, Vol. I.
Anguttara Nikāya, Vol. II.
Thera-theri-gāthā.
Milinda—Pañhā.
Kaccāyana's Pali Grammar
Attha—Sālinī, pages 55—152.
Rhys David's Buddhist India and American Lectures.
Hopkins's "Religions of India," Chapters IX—XIV.

Questions will be set on the history and epigraphy of India during the Buddhist period and on the history of Buddhism and Buddhist literature.

ARABIC.

Prose.

Muquddamát-i-Ibn Khaldún Chapter VI of Book I to the end of section 22.
Maqamát-i-Hariri ... 15 Maqamahs from the 11th.

Poetry.

Hamasah	... ...	From the beginning of Bâb-ul-marâsi to the end of Bâb-ul-Azyafi-wal-madîh.
Diwan-i-mūtanabbi	...	Pages 155 to 304 (Hooghly Edition, 1841).
Sab'h-i-mūallaqah	...	The whole.

Two unseen passages shall be set at the examination—one in prose and the other in poetry. The prose passage shall form part of Paper V, and the poetry passage shall form part of Paper II. Such passages shall not exceed in difficulty the general standard of the text-books prescribed for the examination.

PERSIAN.

Prose.

Shams-uddin Faqir	...	Hadaiq-ul-Balaghat.
Saifí ...	...	Uruz.
Akhlaq-i Jalâli	...	From the beginning to the end of Lama'h VI of Lamí I (pages 1—98), and Lamí II (pages 191—228), Newal Kishore's edition.
Inshai Abu'l Fazl	...	First Daftar.

Poetry.

Kháqáni ...	...	Qasaíd, pages 1—200, Newal Kishore's edition.
Hakim Senái ...	...	Hadiqah, Chapters I and II.
Habib Qáání ...	...	Qasaíd, pages 1—73 (Bombay edition), to the end of the ode in praise of Prince Hasan Ali Mirza.

Candidates are also required to possess a sufficient knowledge of Arabic to enable them to acquire a thorough knowledge of the Persian language.

Two unseen passages shall be set at the examination—one in prose and the other in poetry. The prose passage shall form part of Paper V, and the poetry passage shall form part of Paper II. Such passages shall not exceed in difficulty the general standard of the text-books prescribed for the examination.

HISTORY.

(*a*)	Green ...	...	History of the English People.
	Miss Martineau	...	History of the Thirty Years' Peace, Vols. I and II (to Book V, ch. 9).
	Mill ...	...	History of British India, edited by Wilson; Vols. III, IV, V (Books IV, V, VI, to the end of ch. 6).
(*b*)	Stubbs ...	...	Constitutional History of England.
	Hallam ...	...	Ditto ditto.
	Erskine May ...	...	Ditto ditto.
(*c*)	As a period—The history of Europe from 1754 to 1795:—		
	Lecky ...	...	History of England during the Eighteenth Century—from ch. 7 to end of ch. 21.
	Thiers ...	...	History of the French Revolution, up to the end of the National Convention.
	De Tocqueville	...	France before the Revolution of 1789, translated by Reeve
(*d*)	Sidgwick ...	...	Elements of Politics.
	Austin ...	...	Jurisprudence, Lectures V, VI.
	Wheaton ...	...	International Law, Parts I, II.
(*e*)	Adam Smith ...	...	Wealth of Nations.
	Mill ...	...	Political Economy.
	Marshall ...	...	Principles of Economics, Vol. I (omitting the Appendix).
	Levi ...	...	History of British Commerce.

PREMCHAND ROYCHAND STUDENTSHIP EXAMINATION, 1903.

ENGLISH.

The limits are defined as follows:—

(*a*) The development of the English language from the earliest times to the end of the Fourteenth Century, as illustrated in the Anglo-Saxon and English literature of this period.

BOOKS RECOMMENDED.

Sweet ...	...	Anglo-Saxon Reader, Part I.
Morris and Skeat	...	Specimens of Early English, Parts I and II.
Piers Plowman.		
Chaucer.		
Barlaam and Josaphat	...	As in the Bodleian (779), Vernon and Harley MSS.
Morris	...	Historical Outlines of English Accidence.
Kellner ...	...	Historical Outlines of English Syntax.
Oliphant ...	...	Old and Middle English.

(*b*) The English Drama from its rise to the end of the reign of Queen Anne.

SANSKRIT.

The limits are defined as follows :—

(*a*) *Literature*—

Dandin	...	Dasakumár-Charita.
Bhababhúti	...	Maláti-Mádhaba.
Bháravi	...	Kirátárjuníya, I-XIV.
Bhattanáráyan	...	Bení-Sanhára.

A general acquaintance with Grammar and Rhetoric is required.

(*b*) *Philosophy*—

Vyása and Sankara ... Vedánta-Sútra with Bháshya.

(*c*) *Upanishad*—

Chhándogya Upanishad with Sankara-Bháshya.
Brihadáranyaka-Upanishad with Sankara-Bháshya.

One paper shall be set on each of the above three branches. The fourth paper shall be an essay in Sanskrit on some topic connected with the subjects of the other three papers.

GREEK.

The limits are defined as follows :—

(*i*) A general knowledge of the works of the Greek authors in prose and poetry from the earliest times to 300 B.C. and of Theocritus.
(*ii*) Greek composition in prose and verse.
(*iii*) Special subject—the Drama limited to the extant works of Æschylus, Sophocles, Euripides, and Aristophanes
(*iv*) Questions on textual Criticism and on the history of the Language.

LATIN.

The limits are defined as follows :—

(*i*) A general knowledge of the works of the Latin authors in prose and poetry from the earliest times to 17 A.D. and of Tacitus, Juvenal, and Persius.
(*ii*) Latin composition in prose and verse.
(*iii*) Special subject—Roman History from the earliest times to the death of Julius Cæsar.
(*iv*) Questions on textual Criticism and on history of the Language.

ARABIC.

The limits are defined as follows :—

Diwân-i-Imraul Qais.
Diwân-i-Abû-Nuwâs.
Fâkihatul-Khulafa, first 101 pages.
Maqamât-i-Hariri, 15 Maqamahs from the 26th
Mukhtasar-i-Maani ... Ilm-ul Maani and Ilm-ul Bayan.
Sharh-i-Mulla Jâmi ... From the beginning to the end of Al-Mansûbât.
Aruz-ul-Mifta ... The whole.

COMPARATIVE PHILOLOGY, PALEOGRAPHY, AND EPIGRAPHY.

The limits are defined as follows :—

(*i*) The Science of Language and Comparative Philology generally.
(*ii*) The Comparative Grammar of the Indo-European and Semitic Languages.
(*iii*) The Languages of Europe with special reference to Greek, Latin, and English, their Paleography and Epigraphy.
(*iv*) The Languages of North India with special reference to Sanskrit and its cognates, their Paleography and Epigraphy.

NOTE.—One paper shall be set on each of the groups (*i*), (*ii*), (*iii*), and (*iv*).

BOOKS RECOMMENDED.

Group (*i*).

Max Müller	...	Lectures on the Science of Language.
Sayce	...	Principles of Comparative Philology; Introduction to the Science of Language.
Whitney	...	Language and Study of Language.
Delbruck	..	Introduction to the Study of Language.
Paul	...	Principles of the History of Language (translated by H. A. Strong, 2nd edition, 1890).
Hovelacque	...	The Science of Language: Linguistics, Philology, Etymology (translated by A. H. Keane.)
Key	...	Language: Its origin and development.

Group (*ii*).

Karl Brugmann ...	Elements of the Comparative Grammar of the Indo-Germanic Languages (translated by Dr. J. Wright, S. Conway, and W. H. D. Rouse).
Bopp	Comparative Grammar.
Schleicher	Compendium of the Comparative Grammar of the Indo-European Languages, translated by H. Bendall).
King and Cookson ...	The Principles of Sound and Inflection as illustrated in the Greek and Latin Languages (1888).
Wright	Lectures on the Comparative Grammar of the Semitic Languages.
Martin	Inquiries concerning the structure of the Semitic Languages.
Haupt	Studies on the Comparative Grammar of the Semitic Languages, with special reference to Assyrian (Journal, Royal Asiatic Society, Volume X).

Group (*iii*).

Byrne	Origin of the Greek, Latin, and Gothic roots (2nd edition, 1893).
Helfenstein	Comparative Grammar of the Teutonic Languages.
Latham	The English Language.
Marsh	Origin and History of the English Language. Comparative Grammar of the Anglo-Saxon Language.
Rask	Anglo-Saxon Grammar.
Sweet	Anglo-Saxon Reader. History of English Sounds.
Morris	Historical Outlines of English Accidence.
Clark	The Origin and Varieties of the Semitic Alphabet (Chicago-London, 1887).
Thompson	Greek and Latin Paleography (1893).
Taylor	The Alphabet: An Account of the Origin and Development of Letters (1883).
Edinburgh Review, 1890 ...	The Origin of Alphabets.

Group (*iv*).

Muir	Original Sanskrit Texts, Vol. II.
Müller	A Simplified Grammar of the Pali Language.
Cowell	Prakrita Prakáca of Vararuchi.
Hœrnle	1. Prakrita Lakshana, or Chanda's Grammar of the Ancient Prakrit. 2. Comparative Grammar of the Gaudian Languages. 3. Ancient Indian Alphabets' (Centenary Review of the Asiatic Society of Bengal, Part II).
Beames	Comparative Grammar of the Modern Aryan Languages, 3 volumes.
Grierson	Seven Grammars of the Behari Dialects.
Grierson and Hœrnle ...	Comparative Dictionary of the Behari Language (the Introduction only).
Harkness	Ancient and Modern Alphabets of India.
Cust	The modern languages of the East Indies.

Corpus Inscriptionum Indicarum, Volume I. The Asoka Inscriptions, Volume III. The Gupta Inscriptions. Epigraphia Indicas.

LOGIC AND MENTAL PHILOSOPHY, ETC.

The examination shall include—

(*i*) A general knowledge of Logic and a special study of the following:—

(*a*) The Hegelian Theory of Logic.

(*b*) The Theory of Induction.

(*ii*) A general knowledge of Mental Philosophy and special study of the following:—

(*a*) Spencer's Theory of the External World.

(*b*) Green's Theory of a Spiritual Principle.

(*iii*) A general knowledge of—
(*a*) The History of European Philosophy.
(*b*) The leading systems of Indian Philosophy, as in *Madhavácharyya's Sarva-Darsana-Sangraha* (translated by Cowell and Gough).

(*iv*) A special study of—

(*a*) Aristotle	...	Psychology (translated by Edwin Wallace).
(*b*) Kant	...	Critique of Pure Reason (translated by Max Müller).
(*c*) Annam Bhatta...		Tarka-Sangraha (translated by Ballantyne).
(*d*) Kapila	...	Sankhya Aphorisms (translated by Ballantyne).

NOTE.—One paper shall be set in each of the groups (*i*), (*ii*), (*iii*) and (*iv*).

NATURAL THEOLOGY AND MORAL PHILOSOPHY, ETC.

The examination shall include—

(*i*) A general knowledge of Natural Theology and a special study of the following:—
(*a*) Martineau's Theory of Causality.
(*b*) Spencer's Theory of Evolution in its Relation to Religion and Ethics.

(*ii*) A general knowledge of Moral Philosophy and a special study of the following:—
(*a*) The Nature and Development of Conscience.
(*b*) The Theory of the Ultimate End of Action.

(*iii*) A general knowledge of—
(*a*) The History of European Philosophy.
(*b*) The leading systems of Indian Philosophy, as in *Madhavácharyya's Sarva-Darsana-Sangraha* (translated by Cowell and Gough).

(*iv*) A special study of—

(*a*) Plato	...	The Republic.
(*b*) Kant	...	Theory of Ethics (as in Abbott).
(*c*) Vyása and Sankara...		*Vedanta-Sutras* with *Bháshya* (as in Part I of George Thibaut's translation).

NOTE.—One paper shall be set in each of the groups (*i*), (*ii*), (*iii*) and (*iv*).

HISTORY, POLITICAL ECONOMY, AND POLITICAL PHILOSOPHY.

The examination in history shall be limited to the Hindu and Muhammadan Periods of Indian History. Both periods to be studied generally; and in addition the Hindu Period to be studied with a special reference to the Age of Asoka and to the development of society, religion and literature, and the Muhammadan Period with a special reference to the Age of Akbar. The questions on History shall include the Geography of India in its bearing on these two periods. Two papers shall be set on these subjects.

The examination in Political Economy and Political Philosophy shall be in a standard higher than that prescribed for the M.A. examination, and shall include a knowledge of the historical development of these sciences. Two papers shall be set on these subjects.

8. The following books have been prescribed for the B. L. examination in 1905 and for the Honours in Law Examination in 1904:—

B. L. EXAMINATION, 1905.

(1) The Principles of Jurisprudence; the History and Constitution of the Courts of Law and Legislative Authorities in India.	Maine's Ancient Law; Holland's Elements of Jurisprudence; Cowell's Tagore Law Lectures, 1872.
(2) The Law relating to Persons in their Public and Private Capacities, including the Law of Testamentary Succession.	Act IX of 1875 (Majority); Stephen's Blackstone, Books I and III, Chapters 1—4, Book IV, Part I, Chapters 2 and 6; Act X of 1865 (Succession Act), except Parts III—V, XXX, XXXI, and XXXV—XL; Act XXI of 1870 (Hindu Wills Act), except the portions of the Indian Succession Act omitted from the study of that Act; Act V of 1881 (Probate); Mayne's Hindu Law and Usage, Chapter XI (Wills); Ameer Ali's Students' Manual of Muhammadan Law (2nd edition), Part III, Chapter III (Wills), Snell's Principles of Equity, Part II, Chapter XXII (Infants).

(3) The Law of Property, including the Law relating to Land Tenures and the Revenue Laws.	Nelson's Law of Property, omitting Chapters 3—14, 16—18; Regulations I, VIII of 1793; Regulation VIII of 1819; Regulation XI of 1825; Act XI of 1859, omitting sections 4, 16, 40—52 and 56—62; Act VIII of 1885 (Bengal Tenancy Act), Chapters I—VIII, XI, XIV, XV.
(4) The Law of property, including the Laws of Transfer, Prescription, and Pre-emption.	Act IV of 1882 (Transfer of Property Act); Act III of 1877 (Registration Act), sections 17, 18, 48, 49, 50; Act XV of 1877, sections 26—28 (Prescription); Upendranath Mitra's Indian Law of Prescription and Easements; Golapchandra Sarkar's Hindu Law, Chapter 14 (Endowments); Ameer Ali's Students' Manual of Muhammadan Law (2nd edition), Part III, Chapters I, II, and IV (Gift, *Wakf* and Pre-emption); Snell's Principles of Equity, Part I, Part II, Chapters I—VI.
(5) The Law of Contracts and Torts ...	Anson's Law of Contract; Pollock's Law of Torts, Chapters 1—5, 7 and 9-10; Act IX of 1872; Act I of 1877.
(6) The Law of Crimes and Criminal Procedure.	The Indian Penal Code (Act XLV of 1860), the whole of Chapters 1—5 and such portions of Chapters 6—23 as do not relate exclusively to the amount of punishment to be inflicted for an offence; the Code of Criminal Procedure (Act V of 1898), omitting Chapters 1, 9, 14, 33—40, 42, 43, 46 (except section 562); Mayne's Criminal Law of India (2nd edition), Part II, Chapters 1, 3—15.
(7) The Law of Civil Procedure, including the Law of Evidence and the Law of Limitation.	Stephen's Introduction to the Indian Evidence Act; the Code of Civil Procedure (Act XIV of 1882), Chapters 1—9, 11, 12, 15, 17, 19, 21, 22, 30-31, 33, 35—37, 40—43, 45—47; the Evidence Act (Act I of 1872); the Limitation Act (Act XV of 1877), omitting sections 26—28 and Schedule II.
(8) The Hindu Law and the Muhammadan Law (with the exception of parts already included) and the Law of Intestate Succession.	Mitakshara, Chapter I, Sections I—V; Chapter II, Sections 1—X; Dayabhaga, Chapters 1, 2, 5, 11; Mayne's Hindu Law and Usage, omitting Chapters 1—3, 6-7, 11—13, 20-21, Jogendra Nath Bhattacharyya's Commentaries on Hindu Law, Part II; Golapchandra Sarkar's Hindu Law, Chapters 1-2, 12-13, 15; Sirajiya (except the details as to succession of distant kindred); Amir Ali's Students' Manual of Muhammadan Law (2nd edition), Parts I and II; Act X of 1865 (Succession Act, Parts III—V).

NOTE.—In the list of text-books for the B. L. examination, when any Act is named, it is to be understood to mean that Act with all amendments made up to the 31st March of the year in which the examination is held.

HONOURS IN LAW EXAMINATION, 1904.

(1) HINDU LAW OR MUHAMMADAN LAW.

Hindu Law.

Manu ...	...	Institutes, Chapters I, 3, 7, 8 and 9.	
Yajnavalkya ...	...	Institutes, Book II, on Vyavahára or Positive Law.	
Vijnánesvara ...	...	Mitákshara ...	The portion relating to inheritance.
Devánanda Bhatta	...	Smriti-Chandriká ...	
Váchaspati Misra	...	Viváda-Chintámani ...	
Nilakantha ...	...	Vyavahára Mayukha ...	
Mitra Misra ...	...	Viramitrodaya ...	
Jimútaváhana ...	...	Dáyabhága.	
Nanda Pandita	...	Dáttaka-Mímánsá.	
Raghumani or Kuvera	...	Dáttaka-Chandriká.	
G. D. Banerjee	...	Marriage and Stridhana.	
G. C. Sarkar ...	...	Law of Adoption.	
Mayne ...	...	Hindu Law and Usage.	

Muhammadan Law.

Serajuddin	...	Al Sirajiya.
Baillie	...	Digest of Muhammadan law, Sunni and Shia.
Ameer Ali	...	Muhammadan Law, Vols. I and II.
Wilson	...	Digest of Anglo-Muhammadan Law.

(2) JURISPRUDENCE AND PRINCIPLES OF LEGISLATION.

Austin	...	Jurisprudence.
Holland	...	Jurisprudence.
Mayne	...	Ancient Law, Village Communities, Early History of Institutions, Early Law and Customs.
Holmes	...	Common Law.
Bentham	...	Theory of Legislation.

(3) ROMAN LAW.

Justinian	...	Institutes (translated by Sandars).
Gaius	...	Institutes (translated by Poste).

(4) PRIVATE INTERNATIONAL LAW.

Dicey	...	Conflict of Laws.

(5) and (6) *Two* of the following subjects :—

Principles of Equity.

Story	...	Equity Jurisprudence.
Lewin	...	Law of Trusts.
Agnew	...	Law of Trusts (Tagore Lectures, 1881).
White and Tudor	...	Leading Cases in Equity (7th Edition), omitting cases in the following subjects:—

Conversion, Donatio Mortis Causa, Election, Equitable Estoppel, Husband and Wife, Jurisdiction, Legacies, Satisfaction, Trustees, Waste.

LAW RELATING TO TRANSFER OF IMMOVEABLE PROPERTY AND LAW OF PRESCRIPTION.

Dart	...	Law of Vendors and Purchasers.
Clarke and Humphrey	...	Sale of Land.
Rashbehary Ghose	...	Law of Mortgage.
Goddard	...	Law of Easement.
		The Transfer of Property Act.
		The Indian Easement Act.

LAW RELATING TO WILLS.

Underhill and Strahan	...	On the interpretation of Wills and Settlements.
Theobald	...	Law of Wills.
Walker and Elgood	...	Law of Executors and Administrators.
Henderson	...	Law of Wills (Tagore Lectures, 1887).
		The Indian Succession Act.
		The Hindu Wills Act.
		The Probate and Administration Act.

LAW OF CONTRACTS AND TORTS.

Pollock	...	Principles of Contract, Law of Torts.
Fry	...	Specific Performance.
Finch	...	Cases on the Law of Contract.
Ball	...	Leading Cases on Torts.
		The Indian Contract Act.
		The Specific Relief Act.

SENATE HOUSE,
The 6th September 1902.

K. C. BANURJI,
Offg. Registrar, Calcutta University.

NOTIFICATIONS OF THE BOARD OF REVENUE.

No. 2229B.

NOTICE is hereby given that the Tenth Sale of Opium, the Provision of 1900-1901, will be held at the Government Opium Sale-room, No. 2 Bankshall Street, on Monday, the 29th September 1902, at 11 A.M., and will comprise 4,000 chests, viz:—

	Chests.
Opium manufactured at the Patna Factory, consisting of	2,000
Ditto ditto at the Ghazipur Factory, consisting of ...	2,000
Total ...	4,000

2nd.—The general conditions of the sale now advertised will be the same as usual. They may be ascertained by reference to the Notification issued on the 19th November 1901, and published in the *Government* and *Exchange Gazettes*, or on personal application at the Office of the Board of Revenue.

3rd.—The latest dates for deposit and clearance will be the 4th and 14th October 1902, respectively, that is to say, no Bank of Bengal Receipts, Government Promissory Notes, or other public securities that may be tendered for deposit in redemption of Promissory Notes given by purchasers in the sale-room will be received after 1-30 P.M of Saturday, the 4th October 1902, and no Bank of Bengal Receipts in full payment of lots will be accepted after 3-30 P.M. of Tuesday, the 14th October 1902.

4th.—In addition to the quantity above advertised for sale, the following quantities, more or less, of the opium manufactured at the Patna and Ghazipur Factories will be brought to sale down to December next, on or about the dates specified below. The Board of Revenue, however, reserve to themselves the right of altering these dates, should circumstances render it expedient to do so:—

DATES.	Manufactured at the Patna Factory; about chests.	Manufactured at the Ghazipur Factory; about chests.	Total; about chests.
On or about Monday, 3rd November 1902 ...	2,000	2,000	4,000
On or about Monday, 1st December „ ...	2,000	2,000	4,000
Total ...	4,000	4,000	8,000

By order of the Board of Revenue, L. P.,

H. WHEELER, *Secretary.*

BOARD OF REVENUE, L. P., CALCUTTA, *the 25th August 1902.*

CUSTOM HOUSE NOTICES.

DURGA AND LAKSHMI PUJAS.

THE holidays to be observed in offices under the Government of Bengal are from Monday, the 6th, to Friday, the 17th, October, inclusive.

The Custom House and its Treasury will, however, be open during that period for the usual hours, except from Wednesday, the 8th, to Saturday, the 11th, and on Thursday, the 16th, and Friday, the 17th, October. On these dates it will be open free of charge from 11 A.M. to 12 noon for entering and clearing vessels and for the issue of bills of entry and shipping bills for free goods from or to such vessels, provided notice has been given by the agents concerned on the last preceding open day. The Treasury will, however, remain closed on these days.

L. F. MORSHEAD, *Offg Collector of Customs.*

CALCUTTA CUSTOM HOUSE, *the 2nd September 1902.*

To prevent the repetition of certain frauds which have been committed upon the Custom House, it is notified that in future—

1. Bills of entry or shipping bills should invariably be presented by the Sircars who have signed them, and their signatures should have been countersigned, as they already are in many instances, by a representative of the firm or party for whom they are authorised to appear.

2. All entries relating to—

   (*a*) the number of packages or the like in which the goods are contained,

   (*b*) their *total* value in the column applicable,

should be entered in both words and figures; and the entry in words should have "only" written at the end of it, whilst both words and figures should be written sufficiently clearly and closely together to make any subsequent alteration easily discernible. The name of the firm or party for whom the goods are being cleared should also be entered in the last column of the forms unless shown already elsewhere on them.

L. F. MORSHEAD, *Offg. Collector of Customs.*

CALCUTTA CUSTOM HOUSE, *the 5th September 1902.*

Statement showing the Quantity of Salt (Private Property) in Bonded Warehouses and Afloat on the River Hooghly on the 15th day of September 1902, and Transactions during the half-month from the 1st to the 15th September 1902.

DESCRIPTION OF SALT.	IN BONDED WAREHOUSES IN CALCUTTA.				Quantity afloat.	Grand Total.	TRANSACTIONS DURING HALF-MONTH FROM THE 1ST TO THE 15TH SEPTEMBER 1902, INCLUSIVE.			
	In private golas.	In Sulkea Government golas.	In Kidderpore Dock Government golas.	Total.			Quantity on which duty has been paid.	Manifested quantity arrived in the Port of Calcutta.	Deliveries from shipboard for consumption and for inland bonded warehouses.	Deliveries from bonded warehouses for consumption and for inland bonded warehouses.
1	2	3	4	5	6	7	8	9	10	11
		Mds.	Mds.	Mds.	Mds.	Mds.	Mds.	Mds.	Mds.	Mds.
United Kingdom—										
Liverpool and other Panga salt.	.....	6,80,004	7,88,036	14,68,040	29,829	14,98,769	1,84,035	1,97,661	43,885	1,78,793
Other European countries—										
Hamburg salt	.....	1,01,120	.....	1,01,120	.....	1,01,120	38,488	64,652	23,258	91,330
Aden and Red Sea—										
Aden salt	.....	3,44,530	2,558	3,47,088	... ..	3,47,088	41,062	.....	1,550	46,522
Salif salt	.....	3,85,109	.....	3,85,109	.	3,85,109	43,000	1,38,017	13,000	31,950
Salif rock salt	.....	11,285	.....	11,285	.....	11,285	2,430	8,963	.....	2,130
Rawayah salt	.....	1,72,566	67,158	2,39,724	1,32,716	3,72,440	73,550	1,02,859	51,385	27,315
Muscat and Persian Gulf—										
Muscat, Lingah and Hanjam salt.	.....	1,31,651	.....	1,31,651	.....	1,31,651	1,400	.....	.....	1,400
Ditto ditto Rock salt.	.....	6,117	.....	6,117	.....	6,117	400	.....	.....	400
British India—										
Bombay salt	.....	1,22,276	.....	1,22,276	5,929	1,28,205	31,174*	7,279	.....	34,930
Madras salt	.....	.....	.....	.....	.....	.....	.....	.....	.....	.....
Coconada salt	.....	.....	.....	.....	.....	.....	.....	.....	.....	.....
Vizagapatam salt	.....	.....	.....	.....	.. ...	.....	.....	.....	.....	.....
Other places—										
Madagascar salt	... ..	.....	.....	.....	.....	.....	.. ...	.....	.....	.....
Port Said salt	.....	87,489	.....	87,489	.....	87,489	17,122	.....	.....	15,931
Total ...	.....	20,42,147	8,53,552	29,00,799	1,68,474	30,69,273	4,32,751	5,79,461	1,32,078	3,60,701

* This quantity includes 30,350 maunds Bombay Karkach salt on which the duty was paid at Bombay.

By order of the Board of Revenue, L. P.,

L. F. MORSHEAD, *Offg. Collector of Customs.*

CALCUTTA CUSTOM HOUSE, *the 23rd September 1902.*

ELECTION OF MUNICIPAL COMMISSIONERS.

NOTIFICATION.

IT is hereby notified for general information that at a bye-election held on Monday, the 18th August 1902, in the Sahebganj Municipality, in the district of the Southal Parganas, Babu Upendra Nath Ghose, was duly elected to be a Commissioner of that Municipality, in place of Babu Gopal Chandra Chatterjee, resigned.

H. C. WILLIAMS, *Commissioner.*

COMMR.'S OFFICE, BHAGALPUR, *the 16th September 1902.*

NOTIFICATION.

IT is hereby notified for general information that the 5th September 1902 was fixed as the date for holding a bye-election in Ward No. VI of the Bhagalpur Municipality for the election of a Municipal Commissioner in place of Babu Makund Lal, deceased. Only one candidate having offered himself for election, namely, Babu Surjee Prasad, the said Babu Surjee Prasad was, without any contest, elected a Municipal Commissioner.

H. C. WILLIAMS, *Commissioner.*

COMMR.'S OFFICE, BHAGALPUR, *the 16th September 1902.*

NOTIFICATION.

IT is hereby notified for general information that at a bye-election held on Saturday, the 30th August 1902, in Ward No. V of the Santipur Municipality, in the district of Nadia, Babu Ram Nath Mukherjee was duly elected to be a Commissioner for that ward in the place of Babu Jasada Nandan Pramanik, deceased.

C. J. STEVENSON-MOORE, *Offg. Commissioner.*

COMMR 'S OFFICE, PRESY. DIVN., CALCUTTA, *the 22nd September 1902.*

NOTIFICATION.

IT is hereby notified for general information that the following gentlemen have been elected, under section 9 of the Local Self-Government Act, III (B.C.) of 1885, at the recent general elections, to be members of the several Local Boards in the district of Jessore, representing the thanas noted against each:—

Name of Local Board	Name of thana.	Name of persons elected.
Sadar ...	Chaugatcha outpost	Babu Rajendra Nath Ghose.
	Nawapara do.	„ Kali Das Mitra, B.A., B.L.
	Kaligunge	Munshi Khondker Jahurali.
	Bagherpara	Babu Hridoy Nath Dutt, B.A.
Bongaon ...	Bongaon	Babu Ganga Charan Chatterjee. „ Sita Nath Banerjee.
Magura ...	Mahamedpur	Kazi Gahorali. Babu Indu Bhusan Buxy.
	Salikha outpost	Babu Hemanta Kumar Banerjee.
	Magura including Sripur outpost.	Babu Kebati Kanta Sarkar. „ Amrita Lal Buxy. „ Kailash Chandra Dutt.
Narail ...	Lohargorah	Babu Jogendra Chandra Sarkar.
	Kalia	„ Ambika Charan Bose.
Jhenidah ...	Jhenidah	Babu Kali Prasanna Mukerjee. Munshi Sitabuddin.
	Harina Kundu	Babu Manmatha Nath Roy.
	Kotechandpur	„ Purna Chandra Maulik.

C. J. STEVENSON-MOORE, *Offg. Commissioner.*

COMMR.'S OFFICE, PRESY. DIVN., CALCUTTA, *the 22nd September 1902.*

The Calcutta Gazette.

WEDNESDAY, SEPTEMBER 24, 1902.

PART IA.

Orders and Notifications by the Government of India, &c

[*Reprinted from the "Gazette of India."*]

The following order, issued by the Government of India in the Finance and Commerce Department, is republished for general information.

C. E. BUCKLAND,
Chief Secy. to the Govt. of Bengal.

NOTIFICATION.

STATISTICS AND COMMERCE.
CUSTOMS.

Simla, the 19th September 1902.

No. 5028-S.R.—In exercise of the power conferred by section 19 of the Sea Customs Act, 1878 (VIII of 1878), the Governor-General in Council is pleased to prohibit the taking by sea or by land out of British India of skins and feathers of all birds other than domestic birds, except (*a*) feathers of ostriches and (*b*) skins and feathers exported *bonâ fide* as specimens illustrative of natural history.

E. N. BAKER,
Offg. Secy. to the Govt. of India.

The following orders, issued by the Government of India in the Military Department, are republished for general information.

C. E. BUCKLAND,
Chief Secy. to the Govt. of Bengal.

Simla, the 19th September 1902.

VOLUNTEER CORPS.

APPOINTMENTS, PROMOTIONS AND RESIGNATIONS.

No. 871.—2nd (Presidency) Battalion, Calcutta Volunteer Rifles—

Second-Lieutenant Henry George Lee to be Lieutenant, with effect from the 30th August 1902, *vice* Peirce, resigned.

No. 873.—Assam-Bengal Railway Volunteer Rifles—

George David Hipworth Robottom, Gentleman, to be Second-Lieutenant, with effect from the 1st August 1902, *vice* Coxe, promoted.

Joseph Alexander Fraser, Gentleman, to be Second-Lieutenant, with effect from the 15th August 1902, to complete the establishment.

E. G. BARROW, *Major-Genl.*,
Secretary to the Government of India.

The Calcutta Gazette.

WEDNESDAY, SEPTEMBER 24, 1902.

PART IB.

ORDERS BY THE LIEUT.-GOVERNOR OF BENGAL.

MUNICIPAL AND LOCAL.

NOTIFICATIONS.

No. 1725 T.M.—The 11th September 1902.—It is hereby notified for general information that, under clause (*c*), section 6 of the Bengal Ferries Act, I of 1885, the Lieutenant-Governor is pleased to establish a public ferry at Madia, over the river Kalindri, police-station Ratna, in the district of Malda, where the village road from Madia to 6th mile, Gouripur to Barhal Road, crosses the said river.

Malda.

2. The Lieutenant-Governor is also pleased, in exercise of the power conferred on him by section 35 of the aforesaid Act, to direct that the said ferry shall be managed by the District Board of Malda, and that all the proceeds of the said ferry and all fines levied and compensation received under the said Act in respect thereof shall be paid into the District Fund, with effect from the date of this notification.

No 1727 T.M.—The 11th September 1902.—It is hereby notified for general information that the Lieutenant-Governor is pleased to confirm, under clause 4, section 3, Act XX of 1887, the following rules framed by the Commissioners of the Purulia Municipality, in the district of Manbhum, under section 3 of the Act, for the protection of wild birds and game within the limits of that Municipality:—

Manbhum.

RULES.

1. "Wild birds" for the purposes of these rules shall include jungle-fowl, peafowl, pheasants, patridges, plover, jays, doves, egrets, golden oriel and green fly-catchers.

2. The Local Government having by notification No. 1701T M., dated the 11th September 1902, declared that the provisions of section 3, Act XX of 1887, shall apply to hares, the following rules will apply to that animal also as well as to wild birds

3. The breeding season for the purposes of these rules shall extend from 15th March to the 1st October.

4. Whoever during the breeding season has in his possession within the limits of the Municipality of Purulia any wild bird or hare recently killed or taken, or exposes for sale any such bird or animal, living or dead, shall be liable to a fine not exceeding Rs. 5 for each such bird or animal.

5. Whoever during the breeding season imports into the town the plumage of any kind of wild birds recently killed or taken, or the fur or skin of any hare recently killed or taken, shall be liable to a fine not exceeding Rs. 5 for the plumage of every such bird or the fur or skin of every such hare. In case of a second conviction the fine may extend to Rs. 10 for each such bird or animal.

6. A reward not exceeding half the fine imposed and realised under rules 4 and 5 may be granted by the adjudicating Magistrate to any person who has afforded information leading to a conviction for a breach of any of the above rules.

7. Domesticated peafowl are exempt from the operation of the above rules.

No. 1729T.M.—The 11th September 1902.—It is hereby notified for general information that the Lieutenant-Governor is pleased to confirm, under clause 4, section 3, Act XX of 1887, the following rules framed by the Commissioners of the Jhalda Municipality, in the district of Manbhum, under section 3 of the Act, for the protection of wild birds and game within the limits of that Municipality:—

Manbhum.

RULES.

1. "Wild birds" for the purposes of these rules shall include jungle-fowl, peafowl, pheasants, partridges, plover, jays, doves, egrets, golden oriel and green fly-catchers.

2. The Local Government having by Notification No. 1732T.M., dated the 11th September 1902, declared that the provisions of section 3, Act XX of 1887, shall apply to hares, the following rules will apply to that animal also as well as to wild birds.

3. The breeding season for the purposes of these rules shall extend from the 15th March to the 1st October.

4. Whoever during the breeding season has in his possession within the Municipality of Jhalda any wild bird or hare recently killed or taken, or exposes for sale any such bird or animal, living or dead, shall be liable to a fine not exceeding Rs. 5 for each such bird or animal.

5. Whoever during the breeding season imports into the town the plumage of any kind of wild birds recently killed or taken, or the fur or skin of any hare recently killed or taken, shall be liable to a fine not exceeding Rs. 5 for the plumage of every such bird or the fur or skin of every such hare. In case of a second conviction the fine may extend to Rs 10 for each such bird or animal.

6 A reward not exceeding half the fine imposed and realised under rules 4 and 5 may be granted by the adjudicating Magistrate to any person who has afforded information leading to a conviction for a breach of any of the above rules.

7. Domesticated peafowl are exempt from the operation of the above rules.

No. 1731T.M.—The 11th September 1902.—It is hereby notified for general information that, on the application of the Commissioners of the Purulia Municipality, in the district of Manbhum, the Lieutenant-Governor has been pleased to declare that the provisions of section 3, Act XX of 1887, with respect to wild birds, shall apply, so far as regards the rules framed by the Municipal Commissioners of Purulia, to hares.

Manbhum.

No. 1732T.M.—The 11th September 1902.—It is hereby notified for general information that, on the application of the Commissioners of the Jhalda Municipality, in the district of Manbhum, the Lieutenant-Governor has been pleased to declare that the provisions of section 3, Act XX of 1887, with respect to wild birds, shall apply, so far as regards the rules framed by the Municipal Commissioners of Jhalda, to hares.

Manbhum.

No. 1733T.M.—The 11th September 1902.—It is hereby notified for general information that, on the application of the Commissioners of the Daltonganj Municipality, in the district of Palamau, the Lieutenant-Governor has been pleased to declare that the provisions of section 3, Act XX of 1887, with respect to wild birds, shall apply, so far as regards the rules framed by the Municipal Commissioners of Daltonganj, to hares.

Palamau.

No. 1735T.M.—The 11th September 1902.—It is hereby notified for general information that the Lieutenant-Governor is pleased to confirm, under clause 4, section 3, Act XX of 1887, the following rules framed by the Commissioners of the Daltonganj Municipality, in the district of Palamau, under section 3 of the Act, for the protection of wild birds and game within the limits of that Municipality:—

Palamau.

RULES.

1. "Wild birds" for the purposes of these rules shall include jungle-fowl, peafowl, pheasants, partridges, plover, jays, egrets, golden oriel, green fly-catchers and cuckoos.

2. The rules shall apply to hares also.

3. The breeding season for the purposes of these rules shall extend from the 1st April to the 30th September (the close season for gun licenses for sport in this district).

4. Whoever during the breeding season has in his possession within the limits of the Municipality of Daltonganj any wild bird or hare recently killed or taken, or exposes for sale any such bird or animal, living or dead, shall be liable to a fine not exceeding Rs. 5 for each bird or animal.

5. Whoever during the breeding season imports into the town the plumage of any kind of wild bird recently killed or taken, or the fur or skin of any hare recently killed or taken, shall be liable to a fine not exceeding Rs. 5 for the plumage of every such bird or the fur or skin of any such hare. In case of a second conviction the fine may extend to Rs. 10 for each such bird or animal.

6. A reward not exceeding half the fine imposed and realised under rules 4 and 5 may be granted by the trying Magistrate to any person who has afforded information leading to a conviction for a breach of any of the above rules.

7. Domesticated peafowl are exempted from the operation of the above rules.

No. 1748T.M.—The 12th September 1902.—It is hereby notified that, under section 27 of the Bengal Municipal Act, III of 1884, as modified up to 1st November 1896, the Lieutenant-Governor is pleased to appoint the following gentlemen to be Commissioners of the Debhatta Municipality, in the district of Khulna :—

Khulna.

Babu Annada Prosad Bosu, *vice* Babu Manmohan Rai Chaudhuri, resigned.
„ Narendra Nath Mazumdar, *vice* Babu Bepin Behari Dutta, do.
„ Naranarain Rai Chaudhuri, *vice* „ Sasi Bhusan Rai Chaudhuri, resigned.
„ Amrita Lal Ghose, *vice* Babu Mati Lal Bosu, resigned.
„ Satinath Mukerjee, *vice* „ Sitansu Bhusan Rai Chaudhuri, resigned.

No. 1757T.M.—The 15th September 1902.—It is notified for general information that the Declaration No. 1341T M., dated the 21st September 1901, published at page 168, Part IB of the *Calcutta Gazette* of the 25th idem for the acquisition of a plot of land required by the Dacca Municipality for widening a portion of the Nawabpur Road in the town of Dacca, is hereby cancelled.

Dacca.

No. 1786T.M.—The 15th September 1902.—It is hereby notified that the Lieutenant-Governor is pleased to approve the election by the members of the Sirajganj Local Board, in the district of Pabna, under section 25 of the Bengal Local Self-Government Act, III of 1885, of Mr. J. Johnston to be their Chairman.

Pabna.

No. 1788T.M.—The 15th September 1902 —It is hereby notified that the Lieutenant-Governor is pleased to approve the election by the members of the Pabna Local Board, in the district of Pabna, under section 25 of the Bengal Local Self-Government Act, III of 1885, of Babu Mohini Mohan Lahiri to be their Chairman.

Pabna.

No. 1792T.M.—The 15th September 1902.—It is hereby notified that the Lieutenant-Governor is pleased to approve the election by the members of the Satkhira Local Board, in the district of Khulna, under section 25 of the Bengal Local Self-Government Act, III of 1885, of Babu Jagat Chandra Bose to be their Chairman.

Khulna.

No. 1794T.M.—The 15th September 1902.—It is hereby notified that the Lieutenant-Governor is pleased to approve the election by the members of the Bagerhat Local Board, in the district of Khulna, under section 25 of the Bengal Local Self-Government Act, III of 1885, of Babu Kalidas Mukerjee to be their Chairman.

Khulna.

No. 1796T.M.—The 15th September 1902.—It is hereby notified that the Lieutenant-Governor is pleased to approve the election by the members of the Khulna Local Board, in the district of Khulna, under section 25 of the Bengal Local Self-Government Act, III of 1885, of Babu Kunja Vehari Chakravarty to be their Chairman.

Khulna.

No. 1798T.M.—The 15th September 1902 —It is hereby notified that, under section 7 of the Bengal Local Self-Government Act, III of 1885, the following gentlemen have been elected to be members of the District Board of Khulna :—

Khulna.

Local Boards by which elected.	Names of members.
Sadar ...	Babu Bepin Behari Sen. „ Kunja Vehari Chakravarti. „ Mathura Lal Nag.
Bagerhat ...	Kazi Safiuddin Ahamad. Munshi Mahomed Rasook.
Satkhira ...	Babu Devendro Nath Roy Chowdhury. „ Laksman Chandra Roy. Maulvi Gholam Quasim, Khan Bahadur.

No. 1729 T.M.—The 11th September 1902.—It is hereby notified for general information that the Lieutenant-Governor is pleased to confirm, under clause 4, section 3, Act XX of 1887, the following rules framed by the Commissioners of the Jhalda Municipality, in the district of Manbhum, under section 3 of the Act, for the protection of wild birds and game within the limits of that Municipality:—

Manbhum.

RULES.

1. "Wild birds" for the purposes of these rules shall include jungle-fowl, peafowl, pheasants, partridges, plover, jays, doves, egrets, golden oriel and green fly-catchers.

2. The Local Government having by Notification No. 1732T.M., dated the 11th September 1902, declared that the provisions of section 3, Act XX of 1887, shall apply to hares, the following rules will apply to that animal also as well as to wild birds.

3. The breeding season for the purposes of these rules shall extend from the 15th March to the 1st October.

4. Whoever during the breeding season has in his possession within the Municipality of Jhalda any wild bird or hare recently killed or taken, or exposes for sale any such bird or animal, living or dead, shall be liable to a fine not exceeding Rs. 5 for each such bird or animal.

5. Whoever during the breeding season imports into the town the plumage of any kind of wild birds recently killed or taken, or the fur or skin of any hare recently killed or taken, shall be liable to a fine not exceeding Rs. 5 for the plumage of every such bird or the fur or skin of every such hare. In case of a second conviction the fine may extend to Rs 10 for each such bird or animal.

6. A reward not exceeding half the fine imposed and realised under rules 4 and 5 may be granted by the adjudicating Magistrate to any person who has afforded information leading to a conviction for a breach of any of the above rules.

7. Domesticated peafowl are exempt from the operation of the above rules.

No. 1731 T.M.—The 11th September 1902.—It is hereby notified for general information that, on the application of the Commissioners of the Purulia Municipality, in the district of Manbhum, the Lieutenant-Governor has been pleased to declare that the provisions of section 3, Act XX of 1887, with respect to wild birds, shall apply, so far as regards the rules framed by the Municipal Commissioners of Purulia, to hares.

Manbhum.

No. 1732 T.M.—The 11th September 1902.—It is hereby notified for general information that, on the application of the Commissioners of the Jhalda Municipality, in the district of Manbhum, the Lieutenant-Governor has been pleased to declare that the provisions of section 3, Act XX of 1887, with respect to wild birds, shall apply, so far as regards the rules framed by the Municipal Commissioners of Jhalda, to hares.

Manbhum.

No. 1733 T.M.—The 11th September 1902.—It is hereby notified for general information that, on the application of the Commissioners of the Daltonganj Municipality, in the district of Palamau, the Lieutenant-Governor has been pleased to declare that the provisions of section 3, Act XX of 1887, with respect to wild birds, shall apply, so far as regards the rules framed by the Municipal Commissioners of Daltonganj, to hares.

Palamau.

No. 1735 T.M.—The 11th September 1902.—It is hereby notified for general inform atio that the Lieutenant-Governor is pleased to confirm, under clause 4, section 3, Act XX of 1887, the following rules framed by the Commissioners of the Daltonganj Municipality, in the district of Palamau, under section 3 of the Act, for the protection of wild birds and game within the limits of that Municipality:—

Palamau.

RULES.

1. "Wild birds" for the purposes of these rules shall include jungle-fowl, peafowl, pheasants, partridges, plover, jays, egrets, golden oriel, green fly-catchers and cuckoos.

2. The rules shall apply to hares also.

3. The breeding season for the purposes of these rules shall extend from the 1st April to the 30th September (the close season for gun licenses for sport in this district).

4. Whoever during the breeding season has in his possession within the limits of the Municipality of Daltonganj any wild bird or hare recently killed or taken, or exposes for sale any such bird or animal, living or dead, shall be liable to a fine not exceeding Rs. 5 for each bird or animal.

5. Whoever during the breeding season imports into the town the plumage of any kind of wild bird recently killed or taken, or the fur or skin of any hare recently killed or taken, shall be liable to a fine not exceeding Rs. 5 for the plumage of every such bird or the fur or skin of any such hare. In case of a second conviction the fine may extend to Rs. 10 for each such bird or animal.

6. A reward not exceeding half the fine imposed and realised under rules 4 and 5 may be granted by the trying Magistrate to any person who has afforded information leading to a conviction for a breach of any of the above rules.

7. Domesticated peafowl are exempted from the operation of the above rules.

No. 1748T.M.—The 12th September 1902.—It is hereby notified that, under section 27 of the Bengal Municipal Act, III of 1884, as modified up to 1st November 1896, the Lieutenant-Governor is pleased to appoint the following gentlemen to be Commissioners of the Debhatta Municipality, in the district of Khulna :—

Khulna.

Babu Annada Prosad Bosu, *vice* Babu Manmohan Rai Chaudhuri, resigned.
„ Narendra Nath Mazumdar, *vice* Babu Bepin Behari Dutta, do.
„ Naranarain Rai Chaudhuri, *vice* „ Sasi Bhusan Rai Chaudhuri, resigned.
„ Amrita Lal Ghose, *vice* Babu Mati Lal Bosu, resigned.
„ Satinath Mukerjee, *vice* „ Sitansu Bhusan Rai Chaudhuri, resigned.

No. 1757T.M.—The 15th September 1902.—It is notified for general information that the Declaration No. 1341T M., dated the 21st September 1901, published at page 168, Part IB of the *Calcutta Gazette* of the 25th idem for the acquisition of a plot of land required by the Dacca Municipality for widening a portion of the Nawabpur Road in the town of Dacca, is hereby cancelled.

Dacca.

No. 1786T.M.—The 15th September 1902.—It is hereby notified that the Lieutenant-Governor is pleased to approve the election by the members of the Sirajganj Local Board, in the district of Pabna, under section 25 of the Bengal Local Self-Government Act, III of 1885, of Mr. J. Johnston to be their Chairman.

Pabna.

No. 1788T.M.—The 15th September 1902.—It is hereby notified that the Lieutenant-Governor is pleased to approve the election by the members of the Pabna Local Board, in the district of Pabna, under section 25 of the Bengal Local Self-Government Act, III of 1885, of Babu Mohini Mohan Lahiri to be their Chairman.

Pabna.

No. 1792T.M.—The 15th September 1902.—It is hereby notified that the Lieutenant-Governor is pleased to approve the election by the members of the Satkhira Local Board, in the district of Khulna, under section 25 of the Bengal Local Self-Government Act, III of 1885, of Babu Jagat Chandra Bose to be their Chairman.

Khulna.

No. 1794T.M.—The 15th September 1902.—It is hereby notified that the Lieutenant-Governor is pleased to approve the election by the members of the Bagerhat Local Board, in the district of Khulna, under section 25 of the Bengal Local Self-Government Act, III of 1885, of Babu Kalidas Mukerjee to be their Chairman.

Khulna.

No. 1796T.M.—The 15th September 1902.—It is hereby notified that the Lieutenant-Governor is pleased to approve the election by the members of the Khulna Local Board, in the district of Khulna, under section 25 of the Bengal Local Self-Government Act, III of 1885, of Babu Kunja Vehari Chakravarty to be their Chairman.

Khulna.

No. 1798T.M.—The 15th September 1902.—It is hereby notified that, under section 7 of the Bengal Local Self-Government Act, III of 1885, the following gentlemen have been elected to be members of the District Board of Khulna :—

Local Boards by which elected.	Names of members.
Sadar ...	Babu Bepin Behari Sen. „ Kunja Vehari Chakravarti. „ Mathura Lal Nag.
Bagerhat ...	Kazi Safiuddin Ahamad. Munshi Mahomed Raseck.
Satkhira ...	Babu Devendro Nath Roy Chowdhury. „ Laksman Chandra Roy. Maulvi Gholam Quasim, Khan Bahadur.

The following gentlemen are appointed, under section 7 of the Act, to be members of the Board:—

The Civil Medical Officer ... ...
„ Road-cess Deputy Collector ... } *Ex-officio.*
„ Deputy Inspector of Schools
„ Subdivisional Officer of Bagerhat ...
Babu Amrita Lal Raha.
„ Srinath Chatterjee.
„ Nobokumar Kar.
„ Sosi Bhusan Banerjee.

No. 1803T.M.—The 15th September 1902.—In exercise of the power conferred by section 8(2) (*d*) of the Calcutta Municipal Act, 1899, the Lieutenant-Governor is pleased to appoint the Hon'ble Mr. J. A. Bourdillon, C.S.I., to be a Commissioner of Calcutta, *vice* the Hon'ble Mr. C. W. Bolton, C.S.I., resigned.

Calcutta.

No. 1805T.M.—The 15th September 1902.—It is hereby notified that, under sections 9 (2) (*c*) and 10 (*a*) of the Calcutta Municipal Act, 1899, the Lieutenant-Governor is pleased to appoint the Hon'ble Mr J. A. Bourdillon, C.S.I, to be a Member of the General Committee of the Corporation of Calcutta, *vice* the Hon'ble Mr. C. W. Bolton, C.S.I., resigned.

Calcutta.

No. 1830T.M.—The 18th September 1902—It is hereby notified that, under section 7 of the Bengal Local Self-Government Act, III of 1885, the following gentlemen have been elected to be members of the District Board of Rajshahi—

Rajshahi.

Local Boards by which elected.	Names of members.
Sadar ...	Mr. J. M. Goulding. Babu Radhika Mohan Goswami. „ Kishori Mohan Chaudhuri. „ Krishna Bandhu Sanyal. Munshi Mahomed Sayem.
Nator ...	Babu Surendra Nath Lahiri. „ Durga Das Bhattacharjea. Maulvi Tamizuddin Ahmed.
Naugaon ...	Babu Sasi Bhusan Roy. „ Dino Bandhu Das. „ Dwarka Kanta Chaudhuri.

The following gentlemen are appointed, under section 7 of the Act, to be members of the Board:—

The Senior Uncovenanted Deputy Magistrate and Deputy Collector.
„ Civil Surgeon ... ... } *Ex-officio.*
„ Deputy Inspector of Schools ... ...
Babu Kumudini Kanto Banerjea.
„ Rama Prosad Mullick.
Dr. J. A. Smith.
Mr. E. A. Macdonell.
„ T. G. Rice.
Babu Jadav Chandra Bishi.
„ Mohendra Nath Saha.
„ Kedar Nath Moitra.

No. 1832T.M.—The 18th September 1902.—It is hereby notified that the Lieutenant-Governor is pleased to approve the election by the members of the Sadar Local Board, in the district of Rajshahi, under section 25 of the Bengal Local Self-Government Act, III of 1885, of Babu Krishna Bandhu Sanyal to be their Chairman.

Rajshahi.

No. 1834T.M.—The 18th September 1902.—It is hereby notified that the members of the Naogaon Local Board, in the district of Rajshahi, having at a meeting, under section 25 of the Bengal Local Self-Government Act, III of 1885, requested the Lieutenant-Governor to appoint a Chairman, the Lieutenant-Governor is pleased, under the said section, to appoint the Subdivisional Officer of Naogaon to be the Chairman of that Local Board.

Rajshahi.

No. 1843T.M.—The 18th September 1902.—It is hereby notified that, under section 19 of the Bengal Local Self-Government Act, III of 1885, Mr. F. G. Wilkinson has been elected by the members of the Hajipur Local Board, in the district of Muzaffarpur, to be a member of the Muzaffarpur District Board, *vice* Mr. C. R. Brown, resigned.

Muzaffarpur.

No. 1851T.M.—The 18th September 1902.—It is hereby notified that, under section 7 of the Bengal Local Self-Government Act, III of 1885, the Lieutenant-Governor is pleased to appoint the following gentlemen to be members of the District Board of Malda:—

Malda.

The Road Cess Deputy Collector ... ... } *Ex-officio.*
The Deputy Inspector of Schools ... ... }
The Civil Surgeon of the district ... ... }

Babu Hari Nath Palit.	Mr. G. Hennessy.
„ Nilmani Ghatak.	„ J. R. Hallow.
„ Krishna Lal Chaudhuri.	Maulvi Kadir Buksh.
„ Umesh Chandra Chatterjee.	„ Abdul Aziz Khan.

Maulvi Arzumand Khan.

No. 1854T.M.—The 18th September 1902.—It is hereby notified that, under section 19 of the Bengal Local Self-Government Act, III of 1885, the Lieutenant-Governor is pleased to appoint Babu Kumud Bihari Roy to be a member of the District Board of Bogra, *vice* Mr R. J. F. Stevens.

Bogra.

No. 1858T.M.—The 18th September 1902.—It is hereby notified that the members of the Nator Local Board, in the district of Rajshahi, having failed to elect their Chairman within the time prescribed by rule 77 of the rules framed under section 138 (*c*) of the Bengal Local-Self Government Act, III of 1885, the Lieutenant-Governor is pleased to appoint, under the said rule, the Subdivisional Officer of Nator to be the Chairman of that Local Board.

Rajshahi.

No. 1860T.M.—The 19th September 1902.—Under rule 37 of the Manual of Rules for the Management of Charitable Dispensaries and Hospitals in Bengal, published with Government notification dated 5th January 1892, insert the following exception:—

"*Exception.*—At dispensaries which receive a contribution from Government for the supply of medicines and medical stores to Government servants, these stores shall be supplied from the dispensary stock free of charge to such Government servants as are entitled to receive them."

No. 1874T.M.—The 19th September 1902.—It is hereby notified that, under section 27 of the Bengal Municipal Act, III of 1884, as modified up to 1st November 1896, the Lieutenant-Governor is pleased to appoint Babu Digendra Nath Mukherjee to be a Commissioner of the Hazaribagh Municipality, in the district of Hazaribagh, *vice* Rai Jadunath Mukherjee Bahadur, deceased.

Hazaribagh.

No. 1876T.M.—The 19th September 1902.—It is hereby notified that, under section 27 of the Bengal Municipal Act, III of 1884, as modified up to 1st November 1896, the Lieutenant-Governor is pleased to appoint Maulvi Abdul Haq Khan to be a Commissioner of the Noakhali Municipality, in the district of Noakhali, *vice* Maulvi Abdul Aziz, resigned.

Noakhali.

No. 1879T.M.—The 19th September 1902.—It is hereby notified that, under section 27 of the Bengal Municipal Act, III of 1884, as modified up to 1st November 1896, the Lieutenant-Governor is pleased to appoint the following gentlemen to be Commissioners of the Nalchitti Municipality, in the district of Backergunge:—

Backergunge.

Babu Ambica Charan Das, *vice* Babu Mathura Nath Chowdhury, resigned.
Maulvi Abdul Raheman, *vice* Babu Kali Charan De, resigned.
Babu Srinath Chatati, *vice* Babu Dina Nath Roy, resigned.

No. 1881T.M.—The 19th September 1902.—It is hereby notified that the members of the Banka Local Board, in the district of Bhagalpur, having at a meeting under section 25 of the Bengal Local Self-Government Act, III of 1885, requested the Lieutenant-Governor to appoint a Chairman, the Lieutenant-Governor is pleased, under sections 25 and 29 of the Act, to appoint the Subdivisional Officer of Banka to be the Chairman of that Local Board, *vice* Babu Shyama Pado Chaudhury, resigned.

Bhagalpur.

No. 1885T.M.—The 19th September 1902.—It is hereby notified that, under section 17 of the Bengal Municipal Act, III of 1884, as modified up to 1st November 1896, the Lieutenant-Governor is pleased to appoint the following gentlemen to be Commissioners of the Bettiah Municipality in the district of Champaran:—

Champaran.

Mr. J. R. Lowis.	Babu Chaturbans Lal Misser.
„ R. P. Davis.	Maulvi Kazi Abdul Gafur.
Babu Purna Chandra Mukherji.	„ Syed Izhar Hossain.
„ Kashi Nath.	Babu Ashutosh Singh.
Maulvi Zahur-ul-Huq.	„ Raghunandan Sahai.
„ Wahidul Huq.	Maulvi Muhammad Ishaque.

No. 1887T.M.—The 20th September 1902.—It is hereby notified that, under section 19 of the Bengal Local Self-Government Act, III of 1885, the Lieutenant-Governor is pleased to appoint Babu Kali Kumar Bhattacharjee to be a member of the Sadar Local Board, in the district of Mymensingh, *vice* Babu Chandra Kishore Tarafdar, resigned.

Mymensingh.

No. 1889T.M.—The 20th September 1902.—It is hereby notified for general information that, under section 6 (*b*) of the Bengal Ferries Act, I of 1885, the Lieutenant-Governor is pleased to take possession of the private ferries at Matlubgunge and Gazipur, in the Matlubgunge thana of the district of Tippera, and to declare them to be public ferries.

Tippera.

No. 1891T.M.—The 20th September 1902.—It is hereby notified that the Lieutenant-Governor is pleased, in exercise of the powers conferred on him by section 35 of the Bengal Ferries Act, I of 1885, to direct that the ferries at Matlubgunge and Gazipur over the river Gootee, in the Matlubgunge thana of the district of Tippera, shall be managed by the District Board of Tippera, and that all the proceeds of the ferries and all the fines levied and compensation received under the said Act in respect thereof shall be paid into the District Fund, with effect from the date of this notification.

Tippera.

E. W. COLLIN,
Offg. Secy. to the Govt. of Bengal.

DECLARATION.

No. 1782T.M.—The 15th September 1902.—Whereas it appears to the Lieutenant-Governor of Bengal that land is required to be taken up by Government at the expense of the Monghyr Municipality for a public purpose, viz., for Kirparam outlet, situated in the villages of Chakfaizullah, Durgapur, and Madhokitta, pargana Monghyr, zilla Monghyr, it is hereby declared that for the above purpose a piece of land measuring, more or less, 1 bigha 18 cottahs 17·1 chitaks of standard measurement, is required. The land is bounded as follows:—

Monghyr.

PLOT No. I.

North—By Distillery Road.
South—By Kirparam nala.
East—By Bhairo Mander, Bansi Mander, and other.
West—By Bhairo Mander, Wajir Mander, and others.

PLOT No. II.

North—By East Indian Railway line.
South—By Distillery Road.
East—By Samlal Mander, Debi Mander, and others.
West— Ditto, ditto.

PLOT No. III.

North—By Lowlangri nala.
South—By East Indian Railway line.
East—By Bangali Mander, Bhooso Mander, and other.
West— Ditto, ditto.

A plan of the land may be inspected in the office of the Collector of Monghyr.

This declaration is made, under the provisions of section 6 of Act I of 1894, to all whom it may concern.

E. W. COLLIN,
Offg. Secy. to the Govt. of Bengal.

The Calcutta Gazette.

WEDNESDAY, SEPTEMBER 24, 1902.

PART II.

Advertisements.

[N. B.—Advertisements, Notices, &c., intended for insertion in this part of the Gazette cannot be received after Noon on Monday.]

LAND SALE NOTICES.

Advertisement of Sale.

NOTICE is hereby given that the proprietary right of Government, as specified in the conditions of sale below, to the undermentioned estate, situate in the district of Khulna, will be put up to sale at the Khulna Collectorate on the 29th September 1902, corresponding to 13th Aswin 1309 B.S.

The purchasers will be subject to the following conditions of sale:—

Conditions of Sale.

1st.—The estate to be sold to the highest bidder above the upset price, which will be fixed by the Collector at the time of sale. The purchaser of this estate will be considered as the proprietor of the estate, and the entire proprietary right of Government in such estate will be transferred to him subject to the revenue fixed in perpetuity.

2nd.—The sale to be subject to existing leases and to the rights conferred by the settlement proceedings and by the laws in force, and purchasers to be bound to respect the rights of resident cultivators who have signed the schedule of assessment prepared by the revenue authorities.

3rd.—If the amount of purchase-money do not exceed Rs. 100, the whole amount to be paid down at once.

4th.—If the amount of purchase-money exceed Rs. 100, one-fourth of the amount of bid to be immediately deposited. If the balance be not paid by noon of the fifteenth day after the sale, reckoning the day of sale as one, or if that day be a close holiday, then by noon of the first succeeding office day, the sale is to be cancelled (the sum deposited being forfeited to Government), and the estate to be again put up to sale at the risk of the defaulting purchaser, after issue of advertisement, as in the case of original sale—

Number on the district roll.	Name of estate and pargana.	Approximate area—		Government revenue assessed.	Remarks.
		In bighas.	In acres.		
1	2	3		4	5
		B. K. CH.	A. R. P.	Rs. A.	
944	Haridaskati, pargana Malui	1 13 0	0 2 13	1 2	

Collector's Office, Khulna, the 18th August 1902.

S. C. Mukerjee, Collector.

Advertisement of Sale.

NOTICE is hereby given that the undermentioned plots of land, no longer required by Government, situated along the Assam-Bengal Railway, in the district of Tippera, will be put up to sale at 12 o'clock on the 26th day of September 1902, corresponding with the 10th Asvin 1309 Fasli, at the office of the Collector of Tippera.

The purchasers of the several plots of land will be subject to the following conditions:—

1st.—The purchasers will have no power to make any excavations on the land nearer than 15 feet from the railway fencing, or plough the lands closer than 3 feet from its foundation.

2nd.—If the amount of purchase-money does not exceed Rs. 100, the whole amount must be paid down at once.

3rd.—If the amount of purchase-money exceed Rs. 100, one-fourth of the amount must be immediately deposited. If the balance be not paid by noon of the fifteenth day after the sale, reckoning the day of sale as one, or if that day be a close holiday, then by noon of the first succeeding office day, the sale shall be cancelled, the sum deposited being forfeited to Government, and the lot again put up for sale at the risk of the defaulting purchaser, after issue of advertisement, as in the case of original sale.

4th.—The plots of land will be sold revenue-free to the highest bidders.

5th.—The purchasers shall be put in possession on receipt by the District Collector of the orders of the Board confirming the sale.

Consecutive lot No.	Name of district.	Pargana and mauza.	Number of mile on which land is situate.	Situated on which side of the railway.	Approximate area of lot in bighas and in acres.		Land excluded from sale from each lot.		Commencement and termination of lot.	Boundary of lot.
					B. K. C.	A. R. P.	Reasons for exclusion.	A. R. P.		
1	2	3	4	5	6		7		8	9
1	Tippera ...	Pargana Homnabad, mauza Uttarkul.	At mile No. 78.	South-west of Railway line.	3 6 2	1 0 14·9	.....	.....	Lots Nos. 1 to 18	*North*—Mauza Uttarkul. *South*—Mauza Uttarkul and Railway line. *East*—Mauza Uttarkul. *West*—Railway line.
2	Ditto ...	Pargana ditto, mauza Noagaon.	Ditto	Ditto	0 15 5	0 1 ·4	...	.....	Ditto ...	*North*—Mauza Uttarkul and Railway line. *South*—Mauza Noagaon. *East*—Railway line and mauza Noagaon. *West*—Mauza Noagaon.
3	Ditto ...	Pargana ditto, mauza Ashkanta.	At mile No. 75.	East of Railway line.	1 17 0	0 2 19·5	.....	.....	Ditto ...	*North*—Railway line. *South*—Mauza Ashkanta. *East*—Railway line. *West*—Mauza Ashkanta.
4	Ditto ...	Pargana Homnabad, mauza Lakshanu.	At mile No. 0.	Within ¼ mile of the Railway station.	1 8 11	0 1 35·5	...	.....	Ditto ...	*North*— *South*— } Mauza Lakshanu. *East*— *West*—District Board road.
5	Ditto ...	Pargana Mehar, mauza Upalata.	At mile No. 11.	East of Railway line.	0 17 15	0 1 7·4	.....	.....	Ditto ...	*North*—Mauza Upalata. *South*—Railway line. *East*— *West*— } Mauza Upalata.
6	Ditto ...	Pargan Meharkul mauza Bejoypur.	At mile No. 10.	North of Railway line.	2 10 4	0 3 28·7	.....	.....	Ditto ..	*North*—Mauza Bejoypur. *South*—Bikrampur land attached to the Railway fencing. *East*—Bejoypur mauza. *West*—Railway line.
7	Ditto ...	Pargana Mehar, mauza Naora.	At mile No. 9½.	East of Railway line.	5 0 8	1 2 25·7	.....	.....	Ditto .	*North*—Railway line. *South*—Southern bank of Dighi. *East*—Khal or boundary of mauza Borulia. *West*—Dighi water.
8	Ditto ...	Ditto ...	Ditto	Ditto	8 7 8	2 3 2·9	.....	.....	Ditto ...	*North*—Railway line. *South*—Southern bank of Naora Dighi. *East*—Naora Dighi. *West*—Chandra Kumar Chakerbutty, Jahiraddi Patwari and Monirarr Dhupi.
9	Ditto ...	Pargana Meharkul mauza Saidpur.	At mile No. 7.	South of Railway line.	47 5 14	15 2 21·4	.....	.....	.....	*North*— *South*— } Gangjuri khal. *East*—District Board road. *West*—Gangjuri khal
10	Ditto ...	Ditto ...	Ditto	Ditto	32 12 8	10 3 5·6	...	.....	.....	*North*—Gangjuri khal. *South*—Saidpur. *East*—Railway line. *West*—District Board road,
11	Ditto ...	Ditto ...	Ditto	Ditto	10 14 4	3 2 6·6	.....	.....	.....	*North*—Gangjuri khal. *South*—Jirat Gazi and khash patit. *East*—District Board road. *West*—Gangjuri khal.
12	Ditto ...	Ditto ...	Ditto	Ditto	14 12 12	4 3 14·2	.....	.....	.....	*North*—Rajjabali. *South*—Dakalia river. *East*—District Board road. *West*—Gangjuri khal.
13	Ditto ...	Pargana ditto, mauza Barapara.	At mile No. 10.	North of Railway line.	10 12 13	3 2 3·8	.....	.....	.....	*North*—Gangjuri khal. *South*—Khal or Charpara mauza. *East*—Khal, khal side and District Board road.
14	Ditto ...	Pargana Tora, Tapa Ibrahimpur.	At mile No. 17.	East of Railway line.	120 13 14	39 3 23·8	.....	.....	.....	*West*—Dakshin Bejoypur. *North*—Mauza Toragor. *South*—Railway line. *East*—Mauza Toragor. *West*—Hajigunge khal.
15	Ditto ...	Pargana ditto, mauza Kangnish Hatila.	At mile No. 15.	Ditto	96 9 4	32 2 6·9	.....	.....	Lots Nos. 1 to 18...	*North*—Railway line. *South*—Kangnish mauza. *East*—Khal of Sholkhali. *West*—Kangnish.
16	Ditto ...	Pargana ditto, mauza Panchbaria.	At mile No. 23.	Ditto	31 14 13	10 1 36·6	.....	.....	.....	*North*—Debpur brickfield. *South*— *East*— } Mauza Panchbaria. *West*—
17	Ditto ...	Pargana ditto, mauza Debpur.	Ditto	Ditto	43 7 14	14 1 10·9	.....	.....	.....	*North*—Railway line. *South*—Debpur brickfield. *East*— *West*— } Debpur mauza.
18	Ditto ...	Pargana ditto, mauza Panchbaria Sota Sundar.	Ditto	Ditto	13 8	0 3 21·4	.....	.....	.....	*North*—Panchbaria brickfield. *South*—Dakatia river. *East*—Mauza Panchbaria Sota Sundar. *West*—Mauza Punchbaria Sota Sundar.

Tippera Collectorate, the 2nd August 1902.

H. W. P. SCROOPE, Collector.

Notification A.

NOTICE is hereby given, under sections 6 and 13, Act XI of 1859, that the undermentioned estates and shares of estates in the district of Hooghly will be put up for sale at the office of the Collector of that district on the 26th September 1902 at 12 noon for arrears of revenue and other demands which by law are realisable as arrears of land revenue.

When in columns 5, 7, and 9 of the appended statement it is stated that only a share is to be sold, it is to be understood that a separate account is kept for that share.

Tauzi No.	Name of mahal and pargana.	Sadar jama of whole estate.	Whether the whole estate is to be sold.	If only a share is to be sold, specification of such share or shares.	Names of proprietors of property to be sold.	If only a share is to be sold, the sadar jama of such share.	If the whole estate is to be sold, the arrears due from it.	If only a share is to be sold, the arrears due from it.
1	2	3	4	5	6	7	8	9
4082, Residuary.	Kalupukhuria, thana Pandua, pargana Arambagh.	Rs. A. P. 13,536 1 1		Residuary, i. e., 3 annas 13 gandas 1 cora 1 kranti share of the estate.	Prem Chand Roy, Hama Podo Roy, and others of Madhobpur, thana Arambagh.	Rs. A. P. 2,253 9 5	Rs. A. P.	Rs. A. P. 7,874 10 4

Hooghly Collectorate, Chinsura, the 30th July 1902.

R. C. HAMILTON, Collector.

Notification A.

NOTICE is hereby given, under sections 6 and 13, Act XI of 1859, that the undermentioned estates and shares of estates in the district of Chittagong will be put up for sale at the office of the Collector of that district on the 26th September 1902 at 12 A.M. for arrears of revenue and other demands which by law are realisable as arrears of land revenue.

When in columns 5, 7 and 9 of the appended statement it is stated that only a share is to be sold, it is to be understood that a separate account is kept for that share.

Tauzi No.	Name of mahal and pargana.	Sadar jama of whole estate.	Whether the whole estate is to be sold.	If only a share is to be sold, specification of such share or shares.	Names of proprietors of property to be sold.	If only a share is to be sold, the sadar jama of such share.	If the whole estate is to be sold, the arrears due from it.	If only a share is to be sold, the arrears due from it.
1	2	3	4	5	6	7	8	9
2093 2160 1512	Thana Hathazari, Taraf Krishna Kishore Kanungoe.	Rs. A. P. 645 6 7	Only a share will be sold.	Only share No. 1 and no other share will be sold.	Fazal Ahmed, Bazal Samad and others.	Rs. A. P. 524 13 6	Rs. A. P.	Rs. A. P. 171 3 4

N.B.—The amount shown in column 9 represents the arrear due for kist ending 25th May 1902.

Chittagong, the 16th August 1902.

P. E. CAMMIADE, Offg. Collector.

Notification B

NOTICE is hereby given, under sections 5 and 13, Act XI of 1859, that unless the arrears mentioned below are paid on or before the next latest date of payment, viz., the 28th June 1902, the undermentioned estates or shares of estates in the district of Tippera will be put up for sale at the office of the Collector of that district on the 26th September 1902 at 12 o'clock for the said arrears.

When in columns 5, 7 and 9 of the appended statement it is stated that only a share is to be sold, it is to be understood that a separate account is kept for that share.

Tauzi No.	Name of mahal and pargana.	Sadar jama of whole estate.	Whether the whole estate is to be sold.	If only a share is to be sold, specification of such share or shares.	Names of proprietors of property to be sold.	If only a share is to be sold, the sadar jama of such share.	If the whole estate is to be sold, the arrears due from it.	If only a share is to be sold, the arrears due from it.	Nature and amount of demand for which to be sold.
1	2	3	4	5	6	7	8	9	10
1925	Pargana Uttar Sahapur char near Nagarer Kandi, No. 211.	Rs. A. P. 1,206 10 9	Whole ...	.....	Isban Chandra Datta and others.	Rs. A. P.	Rs. A. P. 201 9 4	Rs. A. P.	Rs. A. P. 201 9 4

Tippera Collectorate the 29th May 1902.

H. W. SCHOOPS, Offg. Collector.

Advertisement of Sale.

NOTICE is hereby given that the undermentioned plots of land, no longer required by Government, situated along the Assam Bengal Railway, in the district of Tippera, will be put up to sale at 12 o'clock on the 3rd day of October 1902, corresponding with 17th Assin (1309 Fusli) at the office of the Collector of Tippera

The purchasers of the several plots of land will be subject to the following conditions :—

1st.—The purchasers will have no power to make any excavations on the land nearer than 15 feet from the railway fencing, or plough the lands closer than three feet from its foundation.

2nd.—If the amount of purchase-money does not exceed Rs. 100, the whole amount must be paid down at once.

3rd.—If the amount of purchase-money exceed Rs. 100, one-fourth of the amount must be immediately deposited. If the balance be not paid by noon of the fifteenth day after the sale, reckoning the day of sale as one, or if that day be a close holiday, then by noon of the first succeeding office day, the sale shall be cancelled, the sum deposited being forfeited to Government, and the lot again put up for sale at the risk of the defaulting purchaser after issue of advertisement as in the case of original sale.

4th.—The plots of land will be sold revenue-free to the highest bidders.

5th.—The purchasers shall be put in possession on receipt by the District Collector of the orders of the Board confirming the sale.

Consecutive lot No.	Name of district.	Pargana and mauza.	Number of mile on which land is situate.	Situated on which side of the railway.	Approximate area of lot in bighas and in acres.		Land excluded from sale from each lot.		Commencement and termination of lot.	Boundary of lot.
					B. K. C.	A. R. P.	Reasons for exclusion.	A. R. P.		
1	2	3	4	5	6		7		8	9
19	Tippera .	Pargana Meharkul, mauza Dharmapur.	At mile No. 95.	West of Railway line.	6 6 2	2 0 13·5	.....	.....	Lot Nos. 19 to 26	(1) *North*—Comilla station yard. *South*—Level cross in Comilla station yard. *East*—Comilla Railway station. *West*—Mauza Dharmapur or District Board road.
20	Ditto ...	Ditto ...	Ditto	Ditto	1 2 12	0 1 20·2		.....	Ditto ...	(2) *North*—Comilla station yard. *South*—District Board road. *East*— } Relinquished land. *West*— }
21	Ditto ...	Pargana ditto, mauza Badarpur.	At mile No. 97.	North of Railway line.	7 19 9	2 2 21·9	.....		Ditto ...	(3) *North*—District Board road or embankment of Gumti river. *South*—Golapkha, Kadirboksh and mauza Badarpur. *East*—Homestead land and cultivated land of Golapkha and Kadirboksh. *West*—Railway line.
22	Ditto ...	Pargana Lauhagar, mauza Ram Chandrapur.	At mile No. 110.	Ditto	23 6 10	7 2 34·1	.....	....	Ditto ...	(4) *North*— } Ramchandrapur. *South*— } *East*—Railway line. *West*—Ramchandrapur.
23	Ditto ...	Ditto ...	Ditto	Ditto	16 1 2	5 3 35·1	.....	.....	Ditto ...	(5) *North*— } *South*— } Ramchandrapur. *East*— } *West*—Railway line.
24	Ditto ...	Pargana Homnabad, mauza Kakaia.	At mile No. 5.	East of Railway line.	94 5 10	31 0 26·7	.....	.....	Ditto ...	(6) *North*—Mauza Kakaia. *South*—Railway line. *East*—Mauza Kakaia. *West*—Kurjan khal.
25	Ditto ...	Pargana Nuunagar, mauza Nakhora.	At mile No. 114.	South of Railway line.	1 11 4	0 2 2·5		.....	Ditto ...	(7) *North*—Nakhora and Railway line *South*—Nakhora. *East*—Railway line. *West*—Nakhora.
26	Ditto ...	Pargana Lauhagar, mauza Pachara.	At mile No. 105.	Noth of Railway line.	1 1 11	0 1 17·255	.	...	Ditto ...	(8) *North*—Asad Gani. *South*—Bank of tank. *East*—Nabab Ali. *West*—District Board road.

Comilla, the 12th August 1902.

H. W. P. SCROOPE, Collector.

NOTICE is hereby given, under sections 5 and 13, Act XI of 1859, that unless the arrears mentioned below are paid on or before the next latest date of payment, viz., the 28th September 1902, the undermentioned estates or shares of estates in the district of Muzaffarpur will be put up for sale at the office of the Collector of that district on the date to be fixed for the sale of the estates and shares in arrears of revenue for the kist of September 1902:—

Tauzi No.	Name of mahal and pargana.	Sadar jama of whole estate.	Whether the whole estate is to be sold.	If only a share is to be sold, specification of such share or shares.	Names of proprietors and property to be sold.	If only a share is to be sold, the sadar jama of such share.	If the whole estate is to be sold, the arrears due from it.	If only a share is to be sold, the arrears due from it.	Nature and amount of demands for which to be sold.
1	2	3	4	5	6	7	8	9	10
280	Jarung Vishnath Singh, pargana Barail.	Rs. A. P. 566 9 1	The whole	.....	Babu Dabi Prosad Singh and others.	Rs. A. P.	Rs. A. P. 35 5 9	Rs. A. P.	Rs. 33-5-9 on account of arrears of land revenue due for kist June 1902.
2153 K.S.	Abul Hassanpur Mauraj, Chakla Gorjaul, pargana Bisara.	810 3 6	.....	Residuary share— As. G. C. K. D. R. Abul Hassanpur... 10 0 0 0 0 0 Tejaul Buzrug ... 9 0 0 0 0 0 Rampur Pauni ... 16 0 0 0 0 0 Pauni-Jairam ... 16 0 0 0 0 0 Barahroop ... 9 12 0 0 0 0 Kanti ... 9 12 0 0 0 0 Barahroop Baharam ... 16 0 0 0 0 0 Ghataro Chatterbhooj ... 9 0 0 0 0 0 Ghataro Gopi Singh ... 9 0 0 0 0 0 Bahlolpur ... 16 0 0 0 0 0 Dharampur Jarung ... 9 0 0 0 0 0 Mohamadpur Rohua ... 16 0 0 0 0 0 Bhugwanpur Tand 13 4 0 0 0 0 Sherpur ... 13 4 0 0 0 0 Pertap Tand ... 5 17 1 1 0 0 Wafapur Banthoo 16 0 0 0 0 0 Rampur Banthoo 16 0 0 0 0 0 Bidhichundpur ... 16 0 0 0 0 0 Sangoputti ... 16 0 0 0 0 0 Chuk Mohamad Warris ... 13 4 0 0 0 0 Sinhwa Kalban ... 8 17 3 1 1 10	Rajbihari Singh and others.	538 1 11	.....	268 5 8	Rs. 268-5-8 due on account of arrears of revenue for the kists of March and June 1902, i.e., Rs. 133-15-4 for kist March 1902 and Rs. 134-6-4 for kist June 1902.

Muzaffarpur Collectorate, the 27th August 1902.

E. V. LEVINGE, Collector.

Notification A.

NOTICE is hereby given, under sections 6 and 13, Act XI of 1859, that the undermentioned estates and shares of estates in the district of Backergunge will be put up for sale at the office of the Collector of that district on the 26th September 1902 at 12 o'clock for arrears of revenue and other demands which by law are realisable as arrears of land revenue.

When in columns 5, 7 and 9 of the appended statement it is stated that only a share is to be sold, it is to be understood that a separate account is kept for that share.

Tauzi No.	Name of mahal and pargana.	Sadar jama of the whole estate.	Whether the whole estate is to be sold.	If only a share is to be sold, specification of such share or shares.	Names of proprietors of property to be sold.	If only a share is to be sold, the sadar jama of such share.	If the whole estate is to be sold, the arrears due from it.	If only a share is to be sold, the arrears due from it.
1	2	3	4	5	6	7	8	9
1994	Taluq Hiswa Nath Sen, of pargana Khanya Bahadurnager.	Rs. A. P. 570 6 11½	Whole estate.	.....	Ram Narain Sen and others.	Rs. A. P.	Rs. A. P. 142 6 9	Rs. A. P. .....
2749	Taluq Durga Gangeswar of pargana Uttar Sahabazpur.	1,037 11 2½	.....	Separate account No. 1 for 8 annas' share.	Guru Prosanna Roy and others.	518 13 8	.....	54 6 5
4534	Char Sarikol of pargana Jatira.	3,441 11 3	Whole estate.	.....	Mr. G. L. Garth and Mr. H. L. Weatheral, trustees to the estate of Tojambal Ali Chondhury and others.	.....	3,441 11 3	.....
4686	Char Jahapur of pargana Jatira.	5,000 0 0	Ditto ...	.....	Ditto ...	.....	300 0 0	.....
5135	Gar Makrari, howla No. 1, of Char Tabgi of pargana Dakshin Sahabazpur.	3,677 0 0	Whole howla.	.....	Basanta Kumar Guha ...	.....	460 0 0	.....

Backergunge Collectorate, the 31st July 1902.

D. WESTON, Collector.

Notification A.

NOTICE is hereby given, under sections 6 and 18, Act XI of 1859, that the undermentioned estates and shares of estates in the district of Gaya will be put up for sale at the office of the Collector of that district on the 25th September 1902 at 12 A.M. for arrears of revenue and other demands which by law are realisable as arrears of land revenue.

When in columns 5, 7, and 9 of the appended statement it is stated that only a share is to be sold, it is to be understood that a separate account is kept for that share, and that the other share or shares in the estate are excluded from the sale.

Tauzi No.	Name of mahal and pargana.	Sadar jama of whole estate.	Whether the whole estate is to be sold.	If only a share is to be sold, specification of such share or shares.	Names of proprietors of property to be sold.	If only a share is to be sold, the sadar jama of such share.	If the whole estate is to be sold, the arrears due from it.	If only a share is to be sold, the share due from it.
1	2	3	4	5	6	7	8	9
1453	Deobaghora, pargana Charkawan.	Rs. A. P. 15,150 15 0	.....	The residuary ijmali share, exclusive of the separated share, consisting of— A P. 1. Adri Kusa ... ... 16 0 2. Badopore ... ... 1 0 3. Charkupa ... ... 0 3 4. Budhua Dia ... ... 16 0 5. Dagaria Chak ... ... 16 0 6. Tetaria Pawai Buzurg ... ... 16 0 7. Tawakal bigha ... ... 8 0 8. Aurawan 1 0	Jawahir Lal and others.	Rs. A. P. 603 14 0	Rs. A. P.	Rs. A. P. 2,831 4 3
4548	Gurua taluka, pargana Sherghatti.	15,997 14 0	Entire ...	... ..	Sheikh Mosaheb Ali and others.	.....	2,206 6 1	.....
4579	Jaipore Dumrawan, pargana Sherghatti.	4,898 8 0	.....	The residuary ijmali share, exclusive of the separated shares, consisting of— A. P. 1. Jaipore Dumrawan ... ... 8 0 2. Akhowri Khap ... ... 8 0 3. Pindra ... ... 8 0 4. Zaree Khap ... ... 8 0 5. Doudpore urf Pandowl ... ... 8 0 6. Deoghar Khap ... ... 4 0 7. Ibrahimpore ... ... 8 0 8. Hardia ... ... 8 0 9. Jadoo Khap urf Jagdeo Khap ... 8 0 10. Ghorjara Kalan ... ... 6 0 11. Kolhua ... ... 8 0 12. Lokee Khap ... ... 8 0 13. Makhdumpore ... ... 8 0 14. Majhar ... ... 8 0 15. Makhu Khap ... ... 8 0 16. Adham Khap ... ... 10 8 17. Siwani Chak ... ... 8 0 18. Sisai urf Tesari ... ... 8 0 19. Basar Khap 4 0	Mussamat Fakhrunnisa Begam *alias* Nanhi Begam and others.	1,221 12 0	.....	934 0 1
4579	Ditto ...	4,898 8 0	.....	Separate account No. I, consisting of the following shares:— A. P. 1. Jaipore Dumrawan ... . 5 4 2. Alahdadpore urf Punowl ... ... 5 4 3. Akhowri Khap ... ... 5 4 4. Amba Dih ... ... 5 4 5. Pindra ... ... 5 4 6. Bagha Khap ... ... 5 4 7. Badar Khap ... ... 5 4 8. Baman ... ... 5 4 9. Barsundh ... ... 5 4 10. Zaree Khap ... ... 5 4 11. Doudpore urf Pandowl ... ... 5 4 12. Dabua Chak ... . 5 4 13. Deoghar Khap ... ... 5 4 14. Ibrahimpore ... ... 5 4 15. Hardia ... ... 5 4 16. Jadu Khap urf Jagdeo Khap ... 5 4 17. Ghorjara Kalan ... ... 5 4 18. Kolhua ... ... 5 4 19. Loki Khap .. .. 5 4 20. Makhdumpore ... ... 5 4 21. Manjhar ... ... 5 4 22. Naudiha ... ... 5 4 23. Adham Khap ... ... 5 4 24. Sugaria ... ... 5 4 25. Salempore ... ... 5 4 26. Siwani Chak ... ... 5 4 27. Sahdeo Khap ... ... 5 4 28. Basir Khap 5 4	Khajeh Ubaullah urf Nidan Nawab and others.	1,179 10 0	.....	25 10
4287	Pankerdih Mallhari taluka, pargana Sherghatti.	15 997 14 0	....	The residuary ijmali share, exclusive of the separated shares, consisting of— A. D. K. B. P. R. RN. PH. 1. Amnabad Hissa ... 3 5 15 6 14 0 0 0 2. Alinagar ... ... 1 10 17 6 11 0 0 0 3. Adampore ... ... 6 2 14 0 0 0 0 0 4. Bishunpore ... ... 0 1 17 19 19 2 0 0 5. Bara Dumri Bahargain ... ... 1 4 1 0 0 0 0 0 6. Bazid Chak ... ... 1 4 1 0 0 0 0 0 7. Bara Khar .. ... 3 5 15 6 14 0 0 0 8. Barah Kurwa ... 4 18 13 19 0 0 0 0 9. Baliari ... ... 3 5 15 6 13 6 14 0 10. Binnek ... ... 3 13 19 15 0 0 0 0 11. Belwar ... ... 0 14 13 5 0 0 0 0 12. Baghi-bar ... ... 4 0 10 0 0 0 0 0 13. Basatta Khurd ... 3 13 19 15 0 0 0 0 14 Batasporo ... ... 1 0 7 17 16 7 6 0 15. Bardih ... ... 1 0 17 1 19 10 0 0 16. Biha ... ... 1 14 14 15 4 10 0 0 17. Baghauta ... ... 1 4 1 0 0 0 0 0 18. Bikopore ... ... 0 4 2 4 3 7 0 0 19. Bara Khurd .. 2 6 7 3 3 6 14 0 20. Belsara .. ... 3 5 15 6 14 0 0 0 21. Bhagua ... ... 2 8 9 16 2 10 0 0 22. Chuan bar ... 0 10 17 16 4 7 10 0 23. Chhakarbandha Biraj ... ... 0 35 4 0 0 0 0 0 24. Chainpore 4 13 8 0 0 0 0 0	Mussamat Alimunnissa Bibi and others.	1,348 7 0	.....	1,273

Tauzi No.	Name of mahal and pargana.	Sadar jama of whole estate.	Whether the whole estate is to be sold.	If only a share is to be sold, specification of such share or shares.	Names of proprietors of property to be sold.	If only a share is to be sold, the sadar jama of such share.	If the whole estate is to be sold, the arrears due from it.	If only a share is to be sold, the arrears due from it.
1	2	3	4	5	6	7	8	9
		Rs. A. P.		A. D. K. B. P. R RN. PH 25. Dharhara ... .. 0 0 10 6 19 19 13 6½ 26. Dhanawan ... 2 9 6 10 0 0 0 0 27. Dumrawan ... ... 7 1 14 14 3 14 0 0 28. Delho Kamalpore .. 2 13 17 14 9 10 0 0 29. Dhibra Bodi Chak 3 1 7 0 0 0 0 0 30. Dighasin ... . 2 9 1 10 0 0 0 0 31. Dubhal Kalan and Khurd ... ... 1 4 1 0 0 0 0 0 32. Deori Khas .. ... 1 18 6 10 0 0 0 0 33. Deoria ... ... 4 18 13 0 0 0 0 0 34. Guhi .. . . 0 0 10 6 19 13 6 5 35. Guhi Doom ... ... 0 0 10 6 19 13 6 5 36. Guhi Seum ... ... 0 0 10 6 19 13 6 5 37. Gangti Mangarganth 1 4 1 0 0 0 0 0 38. Gordiha . 0 0 13 0 0 0 0 0 39. Hahranj Pathra ... 0 12 15 0 0 6 0 0 40. Jaspore ... ... 10 9 6 10 0 0 0 0 41. Jiwan Chak .. ... 4 9 16 6 13 6 14 0 42. Jagarnathpore ... 6 2 14 0 0 0 0 0 43. Jharha maiu Chatti Imamganj ... 0 0 0 0 12 16 0 0 44. Jalwar .. .. 0 1 7 0 0 0 0 0 45. Jamuna .. .. 3 3 0 8 17 16 0 0 46. Karamaih .. ... 3 0 0 0 0 0 0 0 47. Kanchanpore ... 0 0 0 6 19 19 13 6 48. Karsan Chak Debi Das . ... 4 2 4 3 4 0 0 0 49. Karsan Ledha ... 4 2 4 3 4 0 0 0 50. Kamat Chak ... 3 5 15 6 13 6 14 0 51. Khaira Pokhar Kushalpore 4 16 13 0 0 0 0 0 52. Kurma ... ... 3 17 13 0 0 0 0 0 53. Kothi Khas ... 0 4 2 4 3 7 0 0 54. Karangarh . ... 1 14 14 13 12 16 14 0 55. Karhani .. ... 3 5 15 6 14 0 0 0 56. Kajar ... ... 1 4 1 0 0 0 0 0 57. Kulsand Paroria ... 6 2 14 0 0 0 0 0 58. Kundri .. ... 6 2 14 0 0 0 0 0 59. Keola Kalan ... 4 16 13 0 0 0 0 0 60. Kathowtia .. ... 0 12 0 10 0 0 0 0 61. Londa ... ... 4 0 6 3 4 0 0 0 62. Lawabar Sondih ... 5 2 16 13 12 10 14 0 63. Mahasingh Chak ... 0 0 10 6 19 13 6½ 0 64. Manjhowlia ... 1 4 1 0 0 0 0 0 65. Mircha Dadopore ... 2 9 6 10 0 0 0 0 66. Maira ... ... 3 1 5 18 6 14 0 0 67. Monabar ... ... 1 4 1 0 0 0 0 0 68. Mahulan ... ... 4 18 13 0 4 2 0 0 69. Murarpore ... ... 2 11 19 2 19 10 0 0 70. Nowdiha ... ... 4 16 13 0 0 0 0 0 71. Nonal Chak Motha 4 16 15 0 0 0 0 0 72. Nohta Paduma ... 0 0 0 0 10 0 0 0 73. Nohar ... ... 2 19 0 14 3 14 0 0 74. Pathra Badrohia ... 0 0 0 1 2 16 0 0 75. Pira Chak ... ... 0 0 10 6 19 13 6½ 0 76. Pandaria ... ... 0 1 17 19 19 19 2 0 77. Pandari ... ... 6 2 14 0 0 0 0 0 78. Panti ... .. 0 14 13 5 0 0 0 0 79. Pipra Neyamat ... 4 18 13 0 0 0 0 0 80. Patri Soha ... ... 0 9 17 5 10 0 0 0 81. Pakri ... ... 2 0 13 15 6 17 0 0 82. Powra Hissa ... 16 0 0 0 0 0 0 0 83. Raipore Pokhraha 3 8 10 0 0 0 0 0 84. Rabda ... .. 2 16 11 17 5 0 0 0 85. Rengania .. ... 1 4 13 5 0 0 0 0 86. Sheram Chak ... 4 13 16 15 9 0 14 0 87. Sherghatti khas ... 1 4 1 0 0 0 0 0 88. Sagisote ... ... 0 14 5 4 19 10 0 0 89. Salaiya ... ... 5 0 11 0 0 0 0 0 90. Sehna ... ... 0 18 15 18 12 10 0 0 91. Scoti ... ... 1 4 1 10 10 0 0 0 92. Sidpore ... ... 3 1 12 4 1 0 0 0 93. Salaiya ... ... 8 0 15 6 14 0 0 0 94. Salaiya urf Slidiha . 1 4 1 0 0 0 0 0 95. Tilaiya .. .. 1 2 9 15 16 5 0 0 96. Tikri Chak .. ... 3 5 15 6 13 6 14 0 97. Taradih ... ... 1 4 11 0 0 0 0 0 98. Tandwa ... ... 1 4 1 0 0 0 0 0 99. Itawan ... ... 0 14 4 8 5 19 13 14 100. Simri chak 1 2 15 4 7 0 0 0			
5087	Khokhri Balayari Mahammadpore Mahammad Hasan Hufsun, pargana Sonouf.	1,008 11 0	.....	The residuary 1mali share, exclusive of the separated share, amounting to 13 annas 8 pies, will be sold.	Maulvi Sheikh Waizuddin Hasein and others.	878 15 0	.....	43 0 0
6340	Adopore, pargana Kabai.	1,198 0 0	Entire ...	.....	Bhekha Sing and others.	.	90 8 0	.....

Gaya Collectorate, the 1st September 1902.

A. MELLOR, *for* Collector.

Notification A.

NOTICE is hereby given, under sections 6 and 13, Act XI of 1859, that the undermentioned estates and shares of estates in the district of Midnapore will be put up for sale at the office of the Collector of that district on Friday, the 26th September 1902 for arrears of revenue and other demands which by law are realisable as arrears of land revenue.

When in columns 5, 7 and 9 of the appended statement it is stated that only a share is to be sold, it is to be understood that a separate account is kept for that share, and that the other share or shares in the estate are excluded from the sale.

Tausi No.	Name of mahal and pargana.	Sadar jama of whole estate.	Whether the whole estate is to be sold.	If only a share is to be sold, specification of such share or shares.	Names of proprietors of property to be sold.	If only a share is to be sold, the sadar jama of such share.	If the whole estate is to be sold, the arrears due from it.	If only a share is to be sold, the arrears due from it.
1	2	3	4	5	6	7	8	9
		Rs. A. P.				Rs. A. P.	Rs. A. P.	Rs. A. P.
184	Pargana Bajarpore, mahal Panchbajari.	650 10 8	Entire ...	.....	Sarat Chandra Jana and others.	.....	71 2 8	.....
276	Pargana Baliata, mahal Bhitarbinode.	1,658 14 10	Do. ...	.....	Maheswar Masanta and others.	.....	180 4 9	.....
374	Pargana Bhaitgar Bahirimutha, mahal Bhagabanpore *alias* Bar Bhagabanpore.	1,010 9 5	.....	S. A. I	Madhusudan Das	505 4 9	.....	37 12 0
588	Pargana Dakhinmal, mahal Haripore.	6,769 1 5	.....	S. A. II	Haripriya Devi	3,384 5 9	.....	740 0 3
921	Pargana Kasijora, mahal Chakdaha *alias* Radhaballavpore.	9,185 8 0 with police.	.....	Residuary share excluding S. A. Nos. I, II, III, IV, V, VI.	Srimaty Niroda Moyi Dasi and others.	1,232 9 5	.....	283 11 9
937	Pargana Kasijora, mahal Gar Purusothampore *alias* Chaitannapore.	738 10 6	.....	Residuary share excluding S. A. Nos. I and II.	Ganga Narain Maity and others.	690 14 8	.....	36 7 3
939	Pargana Kasijora, mahal Gazni.	2,467 8 8	Entire ...	.....	Srinarain Pal	.....	270 0 0	.....
944	Pargana Kasijora, mahal Gumukpota.	3,185 0 8 with police.	.....	S. A. I	Mani Mohon Ray proprietor Jogendra Nath Pathak mortgagee.	1,592 8 0	.....	174 8 0
947	Pargana Kasijora, mahal Gogras Patna.	1,513 2 3 with police.	.....	Residuary share excluding S. A. I.	Shaikh Soifuddin and others	604 0 0	.....	55 3 0
948	Pargana Kasijora, mahal Gogras Keshabbar.	1,005 8 8	Entire ...	.....	Srimotya Niroda Moyi Dasi and others.	.....	110 0 0	.....
974	Pargana Kasijora, mahal Khandakhola.	936 11 2	Do. ...	.....	Srimotya Kailashi Dasi and others.	.....	102 8 0	.....
978	Pargana Kasijora, mahal Manahorpur *alias* Prasad Chak.	1,625 15 6	Do. ...	.....	Srimotya Niroda Moyi Dasi and others.	.....	178 8 0	.....
1007	Pargana Kasijora, mahal Purba Itra.	43,145 8 3 with police.	.....	Residuary share excluding S. A. Nos. 1, 3, 4, 5, 6, 7, 8, and 9.	Manik Lal Seal	13,109 5 7	.....	75 7 6
1019	Pargana Kasijora, mahal Sadhuapota.	675 1 11	Entire ...	.....	Srimotya Tarangini Dasi ...	.....	74 4 0	.....
1030	Pargana Kasijora, mahal Uther Usatpore.	3,473 9 7	.....	S. A. 8	Nimai Chand De and others	640 0 0	.....	70 0 0
1066	Pargana Kasijora, kismat mahal Palsa Uther.	2,039 1 2 with police.	.....	Residuary share excluding S. A. 1, 2, 3, 4.	Amarnath Ghose and others	532 5 2	.....	59 4 9
1346	Pargana Khatnagor, mahal Dewli.	1,069 5 9	Entire ...	.....	Nimai Chand De	.....	117 14 3	.....
1467	Pargana Khander, mahal Bansgeria *alias* Sahorda.	2,008 8 6	.....	Residuary share excluding S. A. Nos. 4, 5, 6, 8, 9, 10, 11, 12, 13, 14, 15, 16.	Sibaprasad Bhakhat and others.	975 12 4	.....	94 4 0
1730	Pargana Moynachore, mahal Anandapore.	5,657 4 9	.....	S. A. 8	Sripati Charan De	1,795 3 8	.....	196 14 0
1731	Pargana Moynachore, mahal Ankhua Purba.	1,001 7 2	.....	Residuary share excluding S. A. I.	Ganganarain Maity	500 11 7	.....	53 4 6
1884	Pargana Majnamutha, mahal Nankar Bajapti.	2,130 9 0	.....	Residuary share excluding S. A. Nos. 1, 2, 4, 5, 6, 7.	Purna Chandra Mitra and others.	746 13 2	.....	163 5 1
1884	Ditto ditto ...	2,130 9 0	.....	S. A. I	Kritarthamoyi and others ...	703 12 5	.....	154 0 0
2240	Pargana Sabang, mahal Mahar.	1,302 1 0	Entire ...	.....	Syed Matanath Ali and others	.....	33 8 0	.....
2247	Ditto ditto ...	1,445 9 0	Do. ...	.....	Sarat Chandra Jana and others.	.....	156 9 0	.....
2437	Pargana Sahapur, mahal Hasimpore.	1,014 2 10 with police.	Do. ...	.....	Girish Chandra Jana and others.	.....	110 12 6	.....
				Temporary-settled Estates, Part II.				
2884	Pargana Pataspore, mahal Mangolpore.	2,491 0 0	...	Residuary share excluding S. A. No. 2.	Upendra Nandan Das Mohapatra.	2,016 2 6	.....	14 9

Midnapore Collectorate, Arrear Collection Department, the 16th August 1902.

H. LUSON, Collector of Midnapore.

Notification B.

NOTICE is hereby given, under sections 5 and 13, Act XI of 1859, that unless the arrears mentioned below are paid on or before the next latest date of payment, viz. the 29th September 1902, the undermentioned estates or shares of estates in the district of Midnapore will be put up for sale at the office of the Collector of that district on the 18th October 1902 at 12 A.M. for the said arrears.

When in columns 5, 7 and 9 of the appended statement it is stated that only a share is to be sold, it is to be understood that a separate account is kept for that share, and that the other share or shares in the estate are excluded from the sale.

Tausi No.	Name of mahal and pargana.	Sadar jama of the whole estate.	Whether the whole estate is to be sold.	If only a share is to be sold, specification of such share or shares.	Names of proprietors of property to be sold.	If only a share is to be sold, the sadar jama of such share.	If the whole estate is to be sold, the arrears due from it.	If only a share is to be sold, the arrears due from it.	Nature and amount of demand for which to be sold.
1	2	3	4	5	6	7	8	9	10
2716	Pargana Jalamuta, mahal Jalamuta.	Rs. A. P. 1,26,748 8 10	Entire ...	.....	Srimati Haripriya Debi.	Rs. A. P.	Rs. A. P. 27,727 3 6	Rs. A. P.	Arrears for June 1902, Rs. 27,727-3-6.

Midnapore Collectorate, the 2nd September 1902.

H. LUSON, Collector of Midnapore.

Notification B.

NOTICE is hereby given, under sections 5 and 13, Act XI of 1859, that unless the arrears mentioned below are paid on or before the next latest date of payment, viz, the 8th day of November 1902, the undermentioned estates or shares of estates in the district of Cuttack will be put up for sale at the office of the Collector of that district on the 2nd day of December 1902 at for the said arrears:—

Tauzi No.	Name of mahal and pargana.	Sadar jama of whole estate.	Whether the whole estate is to be sold.	If only a share is to be sold, specification of such share or shares.	Names of proprietors of property to be sold.	If only a share is to be sold, the sadar jama of such share	If the whole estate is to be sold, the arrears due from it.	If only a share is to be sold, the arrears due from it	Nature and amount of demand for which to be sold.
1	2	3	4	5	6	7	8	9	10
645	Ma. Narda, pargana Karualkhand.	Rs. A. P. 816 0 0	Whole ...	.....	Choudhury Bhola Nath Misra and others.		Rs A. P. 1 0 0	.....	Previous arrear

Cuttack, the 9th September 1902.

W. F. C. MONTRIOU, Deputy Collector in charge.

Notification A.

NOTICE is hereby given, under sections 6 and 13, Act XI of 1859, that the undermentioned estates and shares of estates in the district of Tippera will be put up for sale at the office of the Collector of that district on the 26th September 1902 at 12 o'clock for arrears of revenue and other demands which by law are realisable as arrears of land revenue

When in columns 5, 7 and 9 of the appended statement it is stated that only a share is to be sold, it is to be understood that a separate account is kept for that share.

Tauzi No.	Name of mahal and pargana.	Sadar jama of whole estate.	Whether the whole estate is to be sold.	If only a share is to be sold, specification of such share or shares.	Names of proprietors of property to be sold.	If only a share is to be sold, the sadar jama of such share.	If the whole estate is to be sold, the arrears due from it.	If only a share is to be sold, the arrears due from it.
1	2	3	4	5	6	7	8	9
285	Taluq Sribatsha Das, pargana Gunanundi.	Rs A. P. 1,223 11 7	Whole ...	... ..	Srimati Monyakhoya Chowdhurani, manager on behalf of minor Harendra Chandra *alias* Har Kumar Pal Chowdhury and others.	Rs. A. P.	Rs. A. P. 18 12 2	Rs. A. P. .....
430	Gazipur Monipur Chur No. 24—71, pargana Maizardi.	1,233 1 0	Do. ...	.....	Kashi Chandra Pal Chowdhury and others.	.....	84 14 4	.....
1925	Char near Nogarerkandi No. 211, pargana Uttershuhapur.	1,296 10 9	Do. ...	.....	Ishan Chandra Dutt and others.		202 9 4	.....
1983	Pargana Bardakhat	1,379 3 10	Do. ...		Bepra Charan Ghosh and others.	.....	179 1 0	.....
31	Doulatpurjoar: the term is from 1261 to 1310 B.S.			... ..				
2299	Shonapur Tajpur, pargana Zasira.	870 10 0	Do. ...	.. ..	Tajammal Ali Chowdhury and others.	.....	200 0 0	.....

Tippera Collectorate, the 26th July 1902.

H. W. SCHOOPS, Collector.

Notice of Lease of Waste Lands in the Sundarbans, under Rule 19, Section 11 of the Waste Lands Manual, 1898.

NOTICE is hereby given that the lease of the land specified in the schedule hereto annexed, and of which the plan is open to inspection at the office of the Commissioner of the Sundarbans, has been applied for by Shomsher Khan Chowdhury, and will be sold at 12 o'clock noon on the 8th of December 1902, Monday, at the Sundarbans Commissioner's office at Alipur, unless meantime the sale is stopped or postponed in consequence of claims or objection under Act XXIII of 1863 (to provide for the adjudication of claims to waste lands), or owing to any other cause.

2. The lease of the land will be granted subject to the conditions which are specified below, as well as to the general terms annexed to the Rules for the Sale of Leases of Waste Lands in the Sundarbans of the 24-Parganas, Khulna, and Backergunge, dated 12th November 1879.

Conditions

That the land shall be subject to all existing rights of way and water and other easements.

That the right of using all streams and channels in any way navigable shall be reserved to the public, as also the use of a tow-path not less than 25 feet in width on each side of every such stream and channel.

That no charge will be made for wood and timber standing on the land at the time it is leased, nor for any wood which may be cut and burnt to effect clearances, or which may be used on the land; but for wood and timber exported for sale a duty shall be levied at such rate and in such manner as may, from time to time, be prescribed by Government.

That the Government reserves to itself the right to all minerals on the land, together with such rights of way and other reasonable facilities as may be requisite for working, getting, and carrying away such minerals. It also

retains its proprietary right in the land, and only confers on the lessee an occupancy right, which shall be hereditary and transferable.

Schedule.

Number of lot.	District, subdivision, and thana.	Area.	Boundaries.
Lot No. 162, second portion.	24-Parganas, Basirhat, Hasanabad	Bighas 6,097	*North.*—By a portion of the Gumti khal, which falls into the Kalindi river. *East.*—By a portion of the Kalindi river. *South.*—By a line bearing 241° drawn from a point on the west bank of the Kalindi river up to a point on the east bank of the Sogunkhali khal, which falls into the Raimongal river, and by a portion of the said Sogunkhali khal up to its junction with the Chingradhopa or Koriar khal. *West.*—By a portion of the Chingradhopa or Koriar khal and by a line bearing 26° drawn from a point on the north bank of the Chingradhopa or Koriar khal to a point on the south bank of the Gumti khal. All the above boundaries are as shown in Sundarbans Commissioner Mr Sunder's map of season 1901-1902

Alipur, the 5th September 1902. D SUNDER, Commissioner in the Sundarbans, Bengal.

Notice of Lease of Waste Lands in the Sundarbans, under Rule 19, Section 11 of the Waste Lands Manual, 1898.

NOTICE is hereby given that the lease of the land specified in the schedule hereto annexed, and of which the plan is open to inspection at the office of the Commissioner of the Sundarbans, has been applied for by Kali Krishna Adock, and will be sold at 12 o'clock noon on the 8th of December 1902, Monday, at the Sundarbans Commissioner's office at Alipur, unless meantime the sale is stopped or postponed in consequence of claims or objection under Act XXIII of 1863 (to provide for the adjudication of claims to waste lands), or owing to any other cause.

2. The lease of the land will be granted subject to the conditions which are specified below, as well as to the general terms annexed to the Rules for the Sale of Leases of Waste Lands in the Sundarbans of the 24-Parganas, Khulna, and Backergunge, dated 12th November 1879.

Conditions.

That the land shall be subject to all existing rights of way and water and other easements.

That the right of using all streams and channels in any way navigable shall be reserved to the public, as also the use of a tow-path not less than 25 feet in width, on each side of every such stream and channel.

That no charge will be made for wood and timber standing on the land at the time it is leased, nor for any wood which may be cut and burnt to effect clearances, or which may be used on the land; but for wood and timber exported for sale a duty shall be levied at such rate and in such manner as may, from time to time, be prescribed by Government.

That the Government reserves to itself the right to all minerals on the land, together with such rights of way and other reasonable facilities as may be requisite for working, getting, and carrying away such minerals It also retains its proprietary right in the land, and only confers on the lessee an occupancy right, which shall be hereditary and transferable.

Schedule.

Number of lot	District, subdivision, and thana	Area.	Boundaries.
G Plot, fifth portion.	24-Parganas, Diamond Harbour, Mathurapur.	Bighas. 5,8.6	*North.*—By a portion of the Kankramari khal, which falls into the Subtermukhi river, and by a line bearing 90° drawn from the east bank of the Kankramari khal to a point on the west bank of the Jagadal river. *East.*—By a portion of the Jagadal river. *South.*—By a line bearing 270° drawn from a point on the west bank of the Jagadal river to a point on the east bank of the Subtermukhi river. *West.*—By a portion of the Subtermukhi river These boundaries are given from late Sundarbans Commissioner Mr. Ross' map of season 1899-1900.

Alipur, the 5th September 1902. D. SUNDER, Commissioner in the Sundarbans, Bengal.

Notice of Lease of Waste Lands in the Sundarbans, under Rule 19, Section 11 of the Waste Lands Manual, 1898.

NOTICE is hereby given that the lease of the land specified in the schedule hereto annexed, and of which the plan is open to inspection at the office of the Commissioner of the Sundarbans, has been applied for by Gobordhon Adock, and will be sold at 12 o'clock noon on the 8th of December 1902, Monday, at the Sundarbans Commissioner's office at Alipur, unless meantime the sale is stopped or postponed in consequence of claims or objection under Act XXIII of 1863 (to provide for the adjudication of claims to waste lands), or owing to any other cause.

2. The lease of the land will be granted subject to the conditions which are specified below, as well as to the general terms annexed to the Rules for the Sale of Leases of Waste Lands in the Sundarbans of the 24-Parganas, Khulna, and Backergunge, dated 12th November 1879.

Conditions.

That the land shall be subject to all existing rights of way and water and other easements.

That the right of using all streams and channels in any way navigable shall be reserved to the public, as also the use of a tow-path not less less than 25 feet in width on each side of every such stream and channel.

That no charge will be made for wood and timber standing on the land at the time it is leased, nor for any wood which may be cut and burnt to effect clearances, or which may be used on the land; but for wood and timber exported for sale a duty shall be levied at such rate and in such manner as may, from time to time, be prescribed by Government.

That the Government reserves to itself the right to all minerals on the land, together with such rights of way and other reasonable facilities as may be requisite for working, getting, and carrying away such minerals. It also retains its proprietary right in the land, and only confers on the lessee an occupancy right, which shall be hereditary and transferable.

Schedule.

Number of lot.	District, subdivision, and thana.	Area.	Boundaries.
Lot No. 183, eighth portion.	24-Pargana, Basirhat,s Hosseinabad.	Bighas 3,793	*North.*—By the Mittakhali khal, which falls into the Raimongal river, and by a line bearing 96° drawn from a point on the east bank of the Mittakhali khal to a point on the west bank of the Nonabhuinya khal. *East.*—By a portion of the Nonabhuinya khal. *South.*—By a portion of the Raimongal river. *West.*—By a portion of the Raimongal river. All the above boundaries are as shown in Sundarbans Commissioner Mr. Sunder's map of season 1901-1902.

Alipur, the 5th September 1902.

D. SUNDER, Commissioner in the Sundarbans, Bengal.

Statement of the Affairs of the Bank of Bengal for the week ending 16th September 1902.

LIABILITIES.

	Rs.	a.	p.
Capital paid up	2,00,00,000	0	0
Reserve Fund	1,14,00,000	0	0
Public Deposits at Head Office Rs. 65,78,912 3 10			
Ditto ditto at Branches „ 1,32,41,523 10 10	1,98,20,435	14	8
Other Deposits at Head Office and Branches	8,09,39,006	10	3
Bank Post Bills, &c.	4,07,396	5	11
Sundries	14,61,916	11	11
Rupees	18,40,28,755	10	9

ASSETS.

	Rs	a.	p.
Government securities	1,53,89,671	0	0
Other authorised investments	67,85,085	0	0
Loans on Government and other authorised securities	2,19,12,716	2	3
Accounts of credit on ditto ditto	1,57,77,759	15	5
Bills discounted and purchased	2,09,59,581	1	8
Balances with other Banks	21,24,931	9	1
Bullion	18,081	0	4
Dead Stock	16,11,877	15	9
Stamps	11,086	4	11
Sundries	7,94,409	13	2
	8,53,77,699	14	10
Cash & Currency Notes at Head Office* Rs. 2,02,63,628 8 2			
Cash & Currency Notes at Branches† „ 2,83,87,427 3 9	4,86,51,055	11	11
Rupees	13,40,28,755	10	9

* Includes Sovs. and ½ Sovs., value Rs. 1,43,370 0 0
† Do. do. do. „ 1,02,165 0 0
Rs. 2,45,535 0 0

By order of the Directors,

BANK OF BENGAL,
Calcutta, the 18th September 1902.

E. J. BIRCH, Chief Accountant.
Rate for Demand Loans 3 per cent.
Percentage 47·40

W. D. CRUICKSHANK,
Secretary and Treasurer.

(676—1)

Statement of Government Promissory Notes enfaced for payment of Interest in London, under deduction of amount retransferred to India, and outstanding in the books of the Bank of Bengal on the 15th September 1902.

PARTICULARS.	3 per cent. of 1894-97.	3½ PER CENT. LOANS—							4 PER CENT. LOANS—							4½ PER CENT. LOANS—				GRAND TOTAL.
		Of 1948-49.	Of 1854-55.	Of 1865.	Of 1879.	Of 1893-94.	Of 1900-1901.	Total.	Of 1888-89.	Of 1885-86.	Of 1842-43.	Of 1854-55.	Transfer of 1865.	Reduced 4 per cent. loan of 1879.	Total.	Of 1870.		Transfer loan of 1879, 4½ per cent. portion.	Total.	
Balance of 31st August 1902	1,58,02,000	2,13,12,200	11,75,09,700	3,01,45,000	1,30,60,000	100	18,85,300	18,39,12,300	6,934	5,000	.....	15,500	40,800	5,700	73,934	5,000	...	29,500	34,500	19,96,23,734
ADD—																				
Amount of 3½ per cent. 1854-55 couponed notes transferred to London	.....	.....	.....	.....	.....	.....	.....	.	.....	.....	.....	.....	.....	.....	.....	.....	...	.....	.....	. .
Amount enfaced at Madras up to 7th September 1902	.....	.....	... .	... ..	.....	.....	... .		.....	.....	.....	... .	.....	... ..	.....	.....	...	.....	.....	. ..
Amount enfaced at Bombay up to 7th September 1902	.....	5,500	18,000	7,500	1,000	.....	1,50,000	1,74,000	.. .		..	... .			.....		...	..	... .	1,74,000
Amount enfaced at Calcutta between 1st and 15th September 1902 ...	.....	... ..	4,900	1,000	...		5,000	10,900	.....	.....	... ..	.....	.....	.....	.....	.....	...	.....	.....	10,900
	1,58,02,000	2,13,17,700	11,75,24,600	3,01,53,500	1,30,61,000	100	20,40,300	18,40,97,200	6,934	5,000	.....	15,500	40,800	5,700	73,934	5,000	...	29,500	34,500	20,00,07,634
DEDUCT—																				
Amount written off in the London registers ...	... ..	5,50,000	1,03,200	.....	....	.... .	1,00,000	10,53,200	.....	.....	.....	... .	.	.. ..	.. ..	.....	...	....	... ..	10,53,200
Balance on 15th September 1902	1,58,02,000	2,04,67,700	11,74,21,400	3,01,53,500	1,30,61,000	100	19,40,300	18,30,44,000	6,934	5,000	.....	15,500	40,800	5,700	73,934	5,000	...	29,500	34,500	19,89,54,434

NOTE.—From 9th June 1867 to 15th July 1902—Enfaced from India 11,115 lakhs ; retransferred from London 10,476 lakhs.
" 16th July 1902 " 31st July " " " " 15 " " " " 4 "
" 1st August " " 15th August " " " " 2 " " " " 7 "
" 16th " " " 31st " " " " 10 " " " " 13 "
" 1st Sept. " " 15th Sept. " " " " 3 " " " " 10 "

11,144 lakhs 10,476 lakhs
10,510 "
Balance against India 634 "

E. HILDRETH,
Superintendent.

W. D. CRUICKSHANK,
Secretary and Treasurer

PUBLIC DEBT OFFICE, BANK OF BENGAL.
Calcutta, the 17th September 1902.

SURVEY OF INDIA DEPARTMENT.

MAP RECORD AND ISSUE OFFICE.

Agents for sale of Maps.

LONDON.—Mr. Edward Standford, 26 & 27 Cockspur Street, Charing Cross, London, S.W.

CALCUTTA.—No Agent. Maps can be obtained from the Office, 13 Wood Street.

ALLAHABAD.—Superintendent, Government Press.

ASSAM.—Babu J. N. Barua for maps of Assam only.

LAHORE.—Rai Sahib Munshi Gulab Sing and Sons, Government Publishers and Booksellers.

MADRAS.—Messrs. Higginbotham & Co.

MANDALAY.—The Manager, Mandalay Herald Press.

MUSSOORIE.—The Mussooree Book Society, Baring Institute.

POONA.—Supdt., Government Photo-Zincographic Dept.

RAJKOT.—The Treasury Officer.

SIMLA.—Messrs. Cotton & Morris; The Exchange.

The following Catalogues of maps are available at annas six per copy :—

1. Assam
2. Atlas of India.
3. Bengal Presidency.
4. Berar or the Hyderabad Assigned Districts and the Nizam's Dominions.
5. Bombay Presidency.
6. Burma.
7. Central India and Rajputana Agencies.
8. Central Provinces.
9. India and Adjacent Countries.
10. Madras Presidency.
11. Punjab.
12. United Provinces of Agra and Oudh.

All published maps are sold at the Survey of India Office, Calcutta, for cash *prepaid*.
Agents cannot issue maps on the *Public Service, except on cash payment.*

Maps published at the Head-Quarter Offices, Calcutta and Dehra Dun, for the quarter ending the 30th June 1902.

TITLE.	Date. of Survey.	Scale.	Number of sheets.	Size of sheet.	PRICE OF MAP UNMOUNTED.		REMARKS.
					Uncoloured.	Coloured.	
					Rs. A.	Rs. A.	
ATLAS OF INDIA.							
Sheet No. 8 N.E.	.....	1" = 4 M.	1	27" × 20	0 12	0 14	With additions to 1897.
Sheets Nos. 20 N.E., 35 N.W., 52 N.W. and 125 S W.	.....	do.	4	do. each	do. each.	do. each.	With additions to 1901.
„ „ 51 S.W., 53 S.E., 53 S.W., 77 S E and 105 S.W.	.....	do.	5	do. each.	do. each.	do. each.	With additions to 1899.
„ „ 60 N.W. and 53 N.W.	.....	do.	2	do. each.	do. each.	do. each.	With additions to 1896.
Sheet No. 60 S.E.	.....	do.	1	do.	do.	do.	With additions to 1898.
„ „ 29 ...	.....	do.	do.	40" × 27"	2 0	2 4	With additions to 1901.
DISTRICT MAPS.							
District Karnal	1870—73 1887-88	do.	do.	do.	1 0	1 4	
STANDARD MAPS.							
Assam—							
Sheet No. 27	1884—86 1890-91 1896-97	1" = 1 M.	1	40" × 25"	1 8	1 12	Preliminary. 2nd Edition.
„ „ 50	1886-87 1891-92 1897-98	do.	do.	do.	do.	do.	Preliminary Edition.
„ „ 60	1891-92 1897-98	do.	do.	do.	do.	do.	Ditto.
„ „ 61	1887—88 1891-92 1897-98	do.	do.	do.	do.	do.	Ditto.

MAPS OF THE SURVEY OF INDIA DEPARTMENT—*continued.*

TITLE.	Date of Survey.	Scale.	Number of sheets.	Size of sheet.	PRICE OF MAP UNMOUNTED.		REMARKS.
					Uncoloured.	Coloured.	
STANDARD MAPS—*concluded.*					Rs. A.	Rs. A.	
Bengal—							
Sheet No. 55	1893-94 1895—99	1″ = 1 M.	1	40″ × 25″	1 8	1 12	Preliminary Edition.
„ „ 80	1892—95	do.	do	do.	do.	do.	
Bombay—							
Sheet No. 112	1863-64 1867-68	do.	do.	do.	do.	do.	2nd Edition.
„ „ 136	1881—83	do.	do.	do.	do.	do	
„ „ 214	1884—86	do.	do.	do.	do.	do.	
Burma—							
Sheet No. 192	1889—99	do.	do.	do.	do.	do.	Preliminary Edition.
„ „ 243	1893-94 1898-99	do.	do.	do.	do.	do.	2nd Edition.
„ „ 244	1889—92 1898—1900	do.	do.	do.	do.	do.	Preliminary Edition.
„ „ 247	1890-91 1898—1901	do.	do.	do.	do.	do.	
„ „ 380	1897-98	do.	do.	do.	do.	do.	
China field force—							
Sheets Nos. 1, 2, 3, 4, 5, 6, 7, 8, 9, 12, 13, 16, 18, 19, 20 and 21.	1900-1901	1″ = 2 M.	16	do each.	do. each.	do. each.	
North-Eastern Frontier Series—							
Sheet No. 15 S.W.	1860—74 1893-94 1899-00	1″ = 4 M.	do.	do.	do.	do.	2nd Edition.
„ „ 22 S.E.	1896-97 1899-00	do.	do.	do.	do.	do.	
„ „ 31 N.W.	1899-00	do.	do.	do.	do.	do.	
Punjab—							
Sheets Nos. 110, 111, 137, 138, 164, 165, 188 and 189.	1851—57	1″ = 1 M.	8	do. each.	do. each.	do. each.	
South-Eastern Frontier Series—							
Sheet No. 1 S.E.	1886—91	1″ = 4 M.	1	do.	do.	do.	5th Edition.
„ „ 2 N.E.	1886-90 & 1897	do.	do.	do.	do.	do.	7th Edition.
„ „ 3 N.E.	1885—87 1890—92	do.	do.	do.	do.	do.	4th Edition.
„ „ 12 S.W.	1894-95 1898—1900	do.	do.	do.	do.	do.	
„ „ 12 S.E.	1898—1900	do.	do.	do.	do.	do.	
North-Western Provinces & Oudh—							
Sheets Nos. 69 and 86 ...	1895-96	do.	2	do. each.	do. each.	do. each.	Preliminary Editions.
Sheet No. 84	1895—97	do.	1	do.	do.	do.	Ditto.
„ „ 99	do.	do.	do.	do.	do.	do.	
North-Western Provinces & Oudh & Bengal—							
Sheets Nos. 214 (N.-W. P. & Oudh) and 52 (Bengal), in one.	1895—97 1892—96	do.	do.	do.	do.	do.	

MAPS OF THE SURVEY OF INDIA DEPARTMENT—*continued.*

TITLE.	Date of Survey.	Scale.	Number of sheets.	Size of sheet.	PRICE OF MAP UNMOUNTED.		REMARKS.
					Uncoloured.	Coloured.	
PLANS OF CITIES AND CANTONMENTS.					Rs. A.	Rs. A.	
Cantonment of Cawnpur with Civil Station, City and Environs.	1867-68	12″ = 1 M	15	34″ × 24″ each.	5 0 per set.	8 12 per set.	With additions and corrections to Railways, &c., up to September 1898.
Calcutta Survey—							
Sheets Nos. M. 7, M. 8, M 16, N. 16, N. 20, O. 12, O. 13, O. 14, O. 15, O. 16, O. 21, O. 24, P. 14, P 15, P. 16, P. 17, P. 18, P. 22 Q 16, Q 17, Q 20, Q. 21, R. 18, R. 19, R. 20, R. 21 and R. 22.	1887—93	1″ = 50 ft.	27	40″ × 27″ each.	1 8 each.	1 12 each.	2nd Editions.
Sheet No. N. 16	1887—92	do.	1	do.	do.	do.	3rd Edition.
ADMINISTRATION REPORT MAPS.							
District Goalpara	.....	1″ = 8 M.	1	17″ × 14″	0 6	.....	Engraved.
Do. Lakhimpur	.....	1″ = 12 M.	do.	15″ × 10″	do.	0 8	
Do. Muzaffarpur	.....	1″ = 8 M.	do.	do.	do.	do.	Corrected up to 1901.
Do. Sylhet	.....	do.	do.	17″ × 13″	do.	.....	
INDEX MAPS.							
Index to the Standard Sheets of N.E. and S.E. Frontier Series.	.....	.....	1	13″ × 9″	0 4	0 4	
Index to the Standard Sheets of H. H. the Nizam's Dominion and the Assigned Districts of Berar.	.....	.....	do.	27″ × 17″	do.	do.	Additions and corrections to 1901.
Index to the Standard Sheets of Assam.	.....	.....	do.	17″ × 14″	.....	do.	
Index to the Standard Sheets of N.E. and S.E. Frontier Series.	.....	.....	do.	30″ × 22″	.....	do.	
TRIANGULATION CHARTS.							
No. 20 Party, Sheets Nos. 213 and 257 (Burma).	1893—96	1″ = 2 M.	2	22″ × 15″ each.	1 0 each.	.....	
MAPS PUBLISHED AT THE DEHRA OFFICE.							
STANDARD MAPS.							
North-Western Trans-Frontier—							
Sheets Nos. 36 and 432 ...	1863—98	1″ = 2 M.	2	38″ × 29″ each	1 8 each.	1 12 each.	2nd Editions.
Sheet No. 14 N.W.	1889—91 1895-96 & 1898-99	1″ = 4 M.	1	36″ × 25″	do.	do.	3rd Edition.
Punjab—							
Sheet No. 335 N.E. ...	1899-00	2″ = 1 M.	do.	38″ × 28″	do.	do.	
„ „ (310 S.E. & 332 S.W.) in one.	1895-96	do.	do.	42″ × 28″	do.	do.	
„ „ 335 S. E. ...	1899-00	do.	do.	do.	do.	do.	
„ „ 248 $\left(\frac{\text{N.E.}}{4}\right)$ L & 248 $\left(\frac{\text{N.E.}}{2}\right)$ R, in one.	do.	4″ = 1 M.	do.	do.	do.	do.	
„ „ 313 $\frac{\text{N.W.}}{1}$ ...	1886—88 1898-99	do.	do.	do.	do.	do.	2nd Edition.

MAPS OF THE SURVEY OF INDIA DEPARTMENT—*continued.*

TITLE.	Date of Survey.	Scale.	Number of sheets.	Size of sheet.	PRICE OF MAP UNMOUNTED.		REMARKS.
					Uncoloured	Coloured.	
					Rs. A.	Rs. A.	
MAPS PUBLISHED AT THE DEHRA OFFICE—*concluded.*							
STANDARD MAPS—*concluded.*							
Sind—							
Sheets Nos. 10 and 11 ...	1900-01	1″ = 1 M.	2	42″ × 28″	1 8 each.	1 12 each.	
„ „ 13 and 14 ..	1896-97	do.	do	do.	do	do.	
Sheet No. 38	1897—00	do.	1	do.	do.	do.	2nd Edition.
CHARTS.							
Chart of Triangulation, Baluchistan Survey, No 12 S.W. (Persia and Afghanistan).	1884-85	1″ = 8 M.	do.	28″ × 21″	1 0	.....	
Chart of Triangulation and Traverse, Sheet No. 20, Parts of Kalat (Baluchistan) and Sind.	1897—99	1″ = 2 M.	do.	do.	do.	.....	Ditto.
Chart of Triangulation and Traverse, Sheet No 39, Sind.	1898-99	do.	do.	do.	do.	.....	
No. 1, Preliminary Chart of the Secondary Triangulation of the Mandalay Minor Longitudinal Series.	1899-00	1″ = 4 M.	do.	42″ × 28″	do.	.....	
Triangulation and Traverse; Sheets Nos. 78 and 96, Sind.	do.	1″ = 2 M.	2	28″ × 21″ each.	do each.	..	
PUBLISHED AND AVAILABLE FROM THE FOREST SURVEY DEPARTMENT, DEHRA DUN.							
STANDARD MAPS.							
Lower Burma—							
Pegu, Sheet No. 259 $\frac{S.E.}{1}$ ...	1898-99	4″ = 1 M.	1	40″ × 27″	1 8	1 12	
„ „ „ 259 $\frac{N.W.}{2}$ ...	1897—01	do.	do.	do.	do.	do.	
„ Sheets Nos. 259 $\frac{S.W.}{2}$ & 259 $\frac{N.E.}{1}$.	1898-99	do.	2	do. each.	do, each.	do. each.	2nd Editions.
Thayetmyo, Sheet No. 114 $\frac{N.W}{4}$	1900-01	do.	1	40″ × 27″	1 8	1 12	
„ Sheets Nos. 114 $\frac{S.E.}{3 \& 4}$ & 115 $\frac{N.E.}{2}$ (in one).	do.	do.	do	do.	1 0	1 4	
Thayetmyo, Sheet No. 115 $\frac{S.E.}{1, 2, \& 4}$.	do.	do.	do.	do.	1 8	1 12	
Thayetmyo, Sheets Nos. 115 $\frac{S.E.}{1}$ & $\frac{N.E.}{3}$ (in one).	do.	do.	do.	27″ × 20″	1 0	1 4	
Shwegyin, Sheet No. 303 $\frac{N.E.}{1}$...	1899-00	do.	do.	40″ × 27″	1 8	1 12	
Toungoo „ „ 301 $\frac{N.W.}{1 \& 3}$...	do.	do.	do.	34″ × 25″	do.	do.	
West Salween, Sheet No. 354 $\frac{N.E.}{2}$.	do.	do.	do.	40″ × 28′	do.	do.	

MAPS OF THE SURVEY OF INDIA DEPARTMENT—*continued.*

TITLE.	Date of Survey	Scale.	Number of sheets.	Size of sheet.	PRICE OF MAP UNMOUNTED		REMARKS.
					Uncoloured.	Coloured.	
PUBLISHED AND AVAILABLE FROM THE FOREST SURVEY DEPARTMENT, DEHRA DUN—*continued.*					Rs. A.	Rs A.	
STANDARD MAPS—*continued.*							
Lower Burma—*concluded.*							
West Salween, Sheets Nos. 397 $\frac{S.W.}{3}$, $\frac{S.W.}{1}$, 353 $\frac{S.E.}{2}$ & 398 $\frac{N.W.}{4}$.	1899-00	4" = 1 M.	4	40" × 28" each.	1 8 each.	1 12 each.	
Thaungyin, Sheet No. 517 $\frac{S.W.}{1}$	1892—99	do.	1	40" × 28"	1 8	1 12	2nd Edition.
" " " 517 $\frac{S.W.}{3}$	1898-99	do.	do.	do.	do.	do.	
Upper Burma—							
Ruby Mines, Sheet No. 283 $\frac{S.E.}{3}$	1899—01	do.	do.	do.	do.	do.	
" " " 283 $\frac{N.E.}{1}$	do.	do	do.	do.	do.	do.	
" Sheets Nos. 282 $\frac{S.W.}{2}$ & $\frac{S.W.}{4}$ (in one)	1900-01	do.	do.	do.	do.	do.	
Ruby Mines, Sheet No. 283 $\frac{N.E.}{2 \& 4}$	do.	do.	do.	40" × 25"	do.	do.	
" " " 283 $\frac{S.E.}{1}$	do.	do.	do.	do.	do.	do.	
" " " 282 $\frac{S.W.}{4}$	1899-00	do.	do	do	do.	do.	
" " " 282 $\frac{N.W.}{2}$	do.	do.	do.	do.	do	do.	
" Sheets Nos. 283 $\frac{N.E.}{3}$ & $\frac{N.W.}{4}$ (in one).	1900-01	do.	do.	do.	do.	do.	
Ruby Mine, Sheet No. 282 $\frac{S.W.}{1 \& 3}$	do.	do.	do.	33" × 25"	1 0	1 4	
" " " 282 $\frac{N.E.}{3}$	1899—01	do.	do.	27" × 20"	do	do.	
" " " 283 $\frac{N.W.}{2}$	1899-00	do.	do.	40" × 25"	1 8	1 12	
" " " 282 $\frac{N.W.}{4}$	1900-01	do	do	do.	do.	do.	
Central Provinces—							
Saugor, Sheets Nos. 29 $\frac{S.E.}{2}$ & $\frac{S.E.}{4}$ (in one).	1898-99	do.	do.	do.	do.	do.	
Saugor, Sheets Nos. 31 $\frac{S.E.}{3}$ & $\frac{S.E.}{4}$ (in one).	1897-98	do.	do.	do.	do.	do.	

MAPS OF THE SURVEY OF INDIA DEPARTMENT—*concluded.*

TITLE.	Date of Survey.	Scale.	Number of sheets.	Size of sheet.	PRICE OF MAP UNMOUNTED.		REMARKS.
					Uncoloured.	Coloured.	
PUBLISHED AND AVAILABLE FROM THE FOREST SURVEY DEPARTMENT, DEHRA DUN—*concluded.*					Rs. A.	Rs. A.	
STANDARD MAPS—*concluded.*							
Central Provinces—*concluded.*							
Chindwara, Sheet No. 69 N.E./1	1898-99	4″ = 1M.	1	40″ × 17″	1 0	1 4	
„ „ „ 69 S.W./4	do.	do.	do.	40″ × 27″	1 8	1 12	
„ „ „ 70 N.E./2	do.	do.	do.	25″ × 20″	1 0	1 4	
„ „ „ 70 N.E./1	do.	do.	do.	40″ × 25″	1 8	1 12	
Bilaspur, Sheet No. 179 S.E./4	1899-00	do.	do.	27″ × 25″	1 0	1 4	
„ „ „ 180 N.E./2	do.	do.	do.	4.″ × 27″	1 8	1 12	
„ Sheets Nos. 180 N.E./4, 180 S.E./2, & 180 S.E./4.	1898-99	do.	3	40″ × 25″ each.	do. each.	do. each.	
Bilaspur, Sheet No. 180 S.E./3	1896—99	do.	1	40″ × 27″	do.	do.	
„ „ „ 202 S.W./4	1898-99	do.	do.	25″ × 20″	1 0	1 4	
N.E.							
Bilaspur, Sheet No. 221 N E/2	1899-00	do.	do.	25″ × 25″	do.	do.	
Sambalpur, Sheets Nos. 252 N.E./3 & 253 N.E./2.	1898—00	do.	2	40″ × 27″ each.	1 8 each.	1 12 each.	
Sambalpur, Sheet No. 263 N.W./1	1899-00	do.	1	25″ × 20″	1 0	1 4	
„ Sheets Nos. 263 N.W./2 & 263 N.W./4 (in one).	do.	do.	do.	40″ × 27″	1 8	1 12	
Sambalpur, Sheets Nos. 264 N.W./1 & 264 N.W./3.	do.	do.	2	25″ × 20″ each.	1 0 each.	1 4 each.	
Punjab—							
Bashahr, Sheet No. 332 S.E./4	1891—94	do.	1	40″ × 27″	1 8	1 12	
„ „ „ 351 S.W./3	1893—95	do.	do.	40″ × 25″	do.	do.	
Chamba, „ „ 262C S.W./2 & 4	1897-98	do.	do.	25″ × 20″	1 0	1 4	

B. G. GILBERT-COOPER,
Offg. Asst. Surveyor-General,
In charge, Map Record and Issue Office.

SURVEY OF INDIA,
Calcutta, 15th July 1902.

CORPORATION OF CALCUTTA.

RULES AND REGULATIONS OF THE PROVIDENT FUND UNDER SECTION (73) (c), ACT III (B.C.) OF 1899.

Commencement.

1. These Rules and Regulations shall take effect as from the 1st day of January 1902.

Definition of terms.

2. (*a*) "Trustees" shall, unless there is anything repugnant in the context, mean and include the Trustees of the Fund for the time being appointed as hereinafter provided.

(*b*) "Salary" comprises only the fixed monthly salary received by each employé from the Corporation, and does not include any acting, officiating, personal or horse allowance, bonus, commission, or other remuneration, or profit whatever, uncertain in amount, or derived by any employé by any means outside his fixed ascertained salary.

(*c*) "Managers" shall include the firm of Chartered Accountants, or such other person or persons as the General Committee may, from time to time, at its uncontrolled discretion, appoint, and in whom the management of the Fund shall, subject to the general supervision and control of the Corporation, be vested. The necessary expenses of management shall be borne by, and be a charge on, the Fund.

Subscribers.

3. Every Municipal officer and servant [other than persons excepted by Section 73 (*c*) of Act III (B.C.) of 1899 and daily labourers] in receipt of not less than Rs. 15 per mensem in the service of the Corporation on 1st January 1902, and who is not contributing towards pension under the rules heretofore in force, and every person who shall join the service of the Corporation on or after that date, shall be subject to and governed by these Rules and Regulations, and every such officer or servant shall sign an Agreement in the form annexed to these Rules and Regulations. Provided always that the General Committee may at any time admit any other officer or servant to the benefits of the Fund.

Appointment of Trustees.

4. The General Committee shall appoint, annually, in the month of April, two Trustees of the Fund, both of whom shall be Commissioners, and such two Commissioners together with the Chairman of the Corporation and an officer of the Corporation to be elected by the subscribers on or before the 15th day of April in each year. For the purpose of this section the officers of the Corporation qualified to be Trustees shall be the Vice-Chairman, Engineer, Health Officer Secretary, Assessor, and Collector. Provided always that the Trustees for the time being shall continue to hold office until their successors are appointed, and that the General Committee and subscribers, respectively, shall have power to make *ad-interim* appointments, as to whenever a vacancy or vacancies may occur among the Trustees

Subscriptions.

5. Subscriptions to the Fund shall be as follows:—

(1) *Compulsory.*—A sum equal to 5 per cent. on the amount of the salary of each subscriber shall be deducted monthly from such salary before payment of the same.

(2) *Voluntary.*—Any subscriber may contribute by monthly instalments such further sum as he may think proper, provided always that the total amount thus voluntarily contributed by him in any one year does not exceed 5 per cent. upon his salary for such year. Nothing in this rule shall prevent any officer or servant of the Corporation, who is contributing towards pension under the rules heretofore in force, from making voluntary contributions to the Fund, provided such contribution does not exceed 5 per cent. upon his salary for such year.

Deduction by Chairman of subscription from salary.

6. The Chairman shall, in any manner he may think most convenient, from time to time deduct from any sum payable by the Corporation to any subscriber, whether by way of salary or otherwise, such sum as may be required to pay any subscription due from him or any arrears of subscription owing by him to the Fund, and shall, from time to time, pay over to the Managers all sums so deducted by him.

Subscriptions of subscribers absent on leave or furlough.

7. The compulsory subscriptions of any subscriber absent on leave or furlough shall, during the period of such absence, be assessed on the salary allowed during such absence, but any such subscriber shall be at liberty to subscribe on the full amount of his salary, if desired, provided notice in writing of such desire shall have been given by him to the Chairman prior to the due date for payment of salary next after such subscriber shall have obtained leave or furlough.

Deduction by Chairman of compulsory subscription and payment of voluntary subscriptions.

8. Compulsory subscriptions shall be paid to the Managers by the Chairman by deduction from the pay of the officer or servant: voluntary subscriptions of any subscriber, including any officer or servant on the Pension Establishment who may elect to subscribe under the provisions of Rule 5 (2), shall be paid by such subscriber to the Managers, or, at his option, may be deducted from his pay-bill to be paid to the Managers.

Contribution by the Corporation to the Fund.

9. For and in respect of each complete year ending with the 31st day of December, the *Corporation shall, as soon after that date as may be practicable, contribute* to the Fund *a sum equal to the aggregate amount* of the compulsory subscriptions for such year, and shall pay the same to the Managers.

Deposit into Bank of moneys received.

10. The Managers shall, from time to time, pay into the Bank of Bengal at Calcutta, or any other Bank at Calcutta sanctioned by the General Committee, to the credit of an account to be opened in the names of the Trustees, all moneys received by the Managers after payment thereout of the expenses of management. All moneys to the credit of such account shall be dealt with only in accordance with these Rules and Regulations, and all or any portion of such moneys shall be withdrawn from such account only by cheques bearing the signatures of *two Trustees*, in addition to the signature of the Managers.

Investment of moneys by Trustees.

11. All moneys not immediately required for the purposes of the Fund shall, from time to time, be invested by the Trustees at their discretion in any of the following Securities, that is to say,—any of the Rupee or Sterling Securities of the Government of India, or any Securities the interest on which is or shall be guaranteed by the Government of India, or in the Bonds, Debentures, or Securities of, or issued by, any Public, Municipal, or Local Body, or authority in India, or in the fully paid-up Stock or Shares of any of the Presidency Banks in India, or in deposit in any Bank in Calcutta approved by the General Committee, either by way of loans on short notice or fixed for a term, with power for the Trustees at their discretion, from time to time, to vary or transpose such investments into or for others of any nature hereinbefore authorised.

Realisations of securities.

12. The Trustees shall, from time to time, upon the written requisition of the Managers, pay to them such sum or sums as may be required for the purposes of these Rules and Regulations, and shall, if necessary, raise the money required for the same by sale of the Securities held by the Trustees, or of a sufficient part thereof, or by loan on the security of the same.

Subscribers' Account.

13. On the 31st day of December in each year the Managers shall, after deducting the expenses of management, credit each subscriber with the equivalent of his compulsory subscription for the preceding year, as provided for under Rule 9, and thereafter having ascertained the amount available for division among the members arising from the interest accrued on Securities, any sums forfeited to the Fund under these Rules and Regulations, and all other moneys (if any) that should properly be brought into account, the Managers shall provisionally credit each subscriber, in proportion to the amount standing to his credit on each 31st December in respect of his total subscriptions, both voluntary and compulsory, with his share of the amount so ascertained

Interest payable.

14. On or as soon as may be after the 31st day of December of each year the Managers shall ascertain and fix the market value of the total net Investments and Securities held by or belonging to the Fund, including interest up to the same day on any Securities on which interest is usually calculated on sale or transfer thereof, and after deducting the payments made therefrom, and providing for debts and ascertained liabilities, paid or incurred, respectively, in conformity with these Rules and Regulations, the Managers shall forthwith debit or credit, as the case may be, the account of each subscriber in the books of the Fund with a share of the difference between the value as appearing from the last preceding valuation recorded in the said books and the then market value as so fixed and ascertained as aforesaid of the said Investments and Securities, including interest as aforesaid, in proportion to the amount at credit of each subscriber on the said 31st December.

Payment from the Fund to subscribers or their representatives.

15. A statement of account of each subscriber shall be made up to the 31st December of each year, and each subscriber shall be required to certify in writing within a month upon such account that the amount therein shown, as standing to his credit, is correct, or in default shall be precluded from challenging its correctness.

On death.

16. Except as is by these Rules and Regulations expressly provided, no subscriber, or any person or persons on his behalf, in respect of his interest in the Fund, shall be entitled to claim any payment of money to him or them.

17. On the death of any subscriber the Managers shall pay to his representatives, executors, or administrators the amount standing to his credit in the books of the Fund on the last day of the month preceding such death, and shall also pay to his representatives, executors, or administrators, the amount in full of his paid-up subscriptions for the then current year.

On retirement.

18. On the *voluntary resignation or retirement* of any subscriber from the service of the Corporation *without the existence of any cause justifying his dismissal*, the Managers shall pay to him the aggregate amount subscribed by him to the Fund and the amount (if any) standing to his credit for interest. Provided that the Managers at the request or by the direction of the General Committee may pay to such subscriber the whole or such portion of the balance as they may in their discretion think fit.

On injury, illness, old age, etc.

19. In case of any subscriber becoming *permanently incapacitated owing to injury sustained whilst in the service* of the Corporation, or in case of the *resignation or retirement, with the previous written sanction of the Corporation*, of any subscriber *owing to illness, old age, or any other reason considered adequate* by the General Committee and so certified in writing by them, the Managers shall (subject to the provisions of these Rules) pay to such incapacitated, resigning or retiring

subscriber, the amount standing to his credit in the books of the Fund on the 31st day of December preceding such incapacity, resignation, or retirement, and also (subject as aforesaid) the full amount of his paid-up subscriptions for the then current year

On dismissal.

20. If any subscriber shall be dismissed from the service of the Corporation, or compelled to retire otherwise than by reason of illness, old age or other incapacity or the abolition of his appointment, the Managers shall (subject to those Rules) pay to him the aggregate amount only subscribed by him to the Fund, without interest, and the balance, if any, of all moneys then standing to his credit in the books of the Fund shall (subject as aforesaid) upon such dismissal or compulsory retirement be forfeited to the use of the Fund, and shall be dealt with accordingly. Provided also that the Managers may, at any time, with the consent of the General Committee, pay to any such subscriber the amount to which he would have been entitled under Rule 18 if he had voluntarily retired from the service of the Corporation and had not been dismissed.

Forfeiture by subscribers of right and interest.

21. The Corporation shall have a *first and paramount charge upon the amount*, from time to time, standing to the credit of each subscriber, and upon all other moneys of the Fund in or to which he may be interested or entitled *for, and in respect of all losses, damages, costs, and expenses* which the Corporation may at any time pay, sustain or be put to, by reason of any act of *embezzlement, or default of* or by such subscriber, and the amount from time to time standing to the credit of each subscriber, and all such other moneys as aforesaid shall be deemed and treated as a deposit made by him with the Corporation as security for his fidelity, and be dealt with accordingly, and in the event of any claim arising by the Corporation against any subscriber under this Rule, the same shall be paid, so far as the funds in which such subscriber shall be interested shall extend, by the Fund to the Corporation on the written requisition of the General Committee, and such subscriber shall absolutely forfeit all right and interest thereto and therein.

Form of certificate of subscriber's balance.

22. In all cases wherein a certificate shall be required of the amount of the balance standing in the books of the Fund to the credit of a deceased subscriber for any purpose, such certificate shall be in the following form :—

*No.*_____

THE CORPORATION OF CALCUTTA.

PROVIDENT FUND.

*It is hereby certified that the balance standing in the books of the Provident Fund of the Corporation of Calcutta to the credit of*_____

*of*_____, *numbered as above on the*

_____*day of*_____

*was Rupees*_____.

*Dated this*_____

*day of*_____*19*____

*Entered*_____

*Examined*_____

_____

Chairman.

Transfer or assignment by subscribers, attachment by Court.

23. *No subscriber shall be entitled to transfer or assign*, whether by way of *security or otherwise*, howsoever his share or interest in the Fund, or any part thereof, and *no such transfer or assignment shall be valid*, and the Managers, Trustees or General Committee shall not recognize or be bound by notice to them, respectively, of any such transfer or assignment, and all moneys standing in the books of the Fund to the credit of the subscriber so transferring his interest as aforesaid, shall forthwith be forfeited as from the date of such transfer or assignment, to the use of the Fund and be dealt with accordingly, and further if any *prohibitory order, or attachment, or process of a Civil Court* be served upon the Managers, Trustees, General Committee or Corporation or any of them, or any person on

their behalf, by which any moneys standing to the credit of any subscriber in the books of the Fund shall be attached, or be ordered to be paid into a Civil Court, or be ordered to be withheld from such subscriber, *such moneys shall forthwith be forfeited* to the use of the Fund, and be dealt with accordingly. Provided that the General Committee shall be at liberty, if they shall so think fit, at any time thereafter, to give such moneys or any part thereof for the benefit of such employé, or his wife, children, or relations, and the Managers shall deal with such moneys accordingly on the *written requisition of the General Committee*.

Powers of the Corporation.

24. It shall be lawful for the *Corporation*, from time to time, and at any time hereafter, in writing under their hands to *alter, vary, modify, re-make, rescind, or add to* these Rules and Regulations, or any of them, but so that no such alteration, variation, modification, re-making, rescission, or addition shall affect the rights of any employé with respect to the Fund.

The Corporation to consider and finally decide all disputes.

If *any dispute* shall at any time arise between the Trustees, Managers or General Committee on the one hand and any subscriber, or any heir, representative, executor or administrator, or any person claiming as next-of-kin of any subscriber or in any other capacity, on the other hand, regarding these Rules and Regulations and the interpretation thereof, or any matter arising thereout or connected therewith, then and in every such case the matter in dispute shall be referred in writing to the Corporation, and their decision shall be final.

Liability for losses.

26. Any loss to the funds of the Provident Fund from any cause shall be borne by the Provident Fund.

I HEREBY declare that I have read the foregoing Rules and Regulations of the Provident Fund of the Corporation of Calcutta, and that I agree to be bound by them.

Dated, the_____day of_____19____

Name in full_____

Date of birth_____

Nature of appointment_____

Date of joining service_____

Present salary per mensem, Rupees_____

Signature_____

Witness_____

[*N.B.*—(1) The above Rules shall not apply to those who are already contributing towards pension.

(2) An application will be made to the Government of India, under Section 6 of Act IX (L.C.) of 1897, to extend the provisions of that Act to the Provident Fund of the Corporation as a local authority within the meaning of the Local Authorities Loans Act, XI (L.C.) of 1879.]

(671—1)

Pure Sulphate of Quinine.

MANUFACTURED AT THE BENGAL GOVERNMENT CINCHONA PLANTATION.

FROM 1st April 1902 the price of this quinine will be as follows:—

1	Pound	tin	Rs.	17,	or,	post	free,	Rs. 17 8
½	,,	,,	,,	8-8	,,	,,	,,	8-14.
¼	,,	,,	,,	4-4	,,	,,	,,	4-10

Analysis shows this quinine to be of the purest manufacture; and it is guaranteed to be free from wilful mixture with the inferior alkaloids, cinchonine and cinchonidine. It is for sale only to Government officers, and only for cash, and may be had from the Superintendent, Botanic Garden, Sibpur, near Calcutta.

Cinchona Febrifuge.

Cinchona Febrifuge can be purchased by all Government officers and by any one taking *six pounds* and upwards at a time from the Superintendent, Botanic Garden, Calcutta, for cash only at the following rates—

	Government officers.	General public.	Postage extra.
	Rs. A.	Rs.	As.
1 Pound tin ...	10 0	12	8
½ ,, ,, ...	5 0	6	6
¼ ,, ,, ...	2 8	3	4

BEJAY KUMAR BHATTACHARJEE intends to be enrolled as a Vakeel, High Court.

(621—4—1086)

BABU SUDARSHANA CHAKRAVARTY, Pleader, Rajshahi, intends to be enrolled as a Vakil of the High Court. (619—4—1171)

BABU GIRIJA SANKER CHOUDHURI, B L., Rajshahi, intends to be enrolled as a Vakeel of the Calcutta High Court. (678—4—1176)

MR. ARTHUR JAMES DENT has been admitted a partner in our firm from 1st July last.

GLADSTONE, WYLLIE & Co.

Calcutta, the 15th September 1902. (639—3—1165)

Wanted

BY the Muzaffarpur District Board a Supervisor on a salary of Rs. 150 rising to Rs. 200 per month. Applicants must be qualified as prescribed in Rule 7, Part IX of the Bengal Local Self-Government Act.

Copies of testimonials will be received by the undersigned up to noon of the 1st October 1902.

G. W. DISNEY, A.M.I.C.E.,
District Engineer, Muzaffarpur.

The 8th September 1902. (634—3

Wanted

FOR the Midnapore District Board two Inspectors on salaries of Rs. 60 rising to Rs. 80 by annual increments of Rs 2 each for the inspection and administration of the Board's pounds and ferries throughout the district. The Inspectors will be required to be away from head-quarters at a greater distance than five miles for 25 days in the month. They will be allowed travelling allowance whilst so away at the rate of one rupee a day up to Rs. 25 a month.

Candidates must produce certificates of their honesty and capacity (including educational qualifications) and of their age. They must also furnish a list of their relatives in the service of Government, if any. Ability to ride is indispensable.

Applications will be received by the Vice-Chairman up to the 30th September 1902.

H. LUSON, Chairman.

(637—2)

Wanted

A TUTOR-GUARDIAN for a younger Jeria ward on a monthly salary of Rs. 35 *plus* a monthly allowance of Rs. 5 for teaching Sanskrit to the ward, if the Tutor-Guardian be able to teach that subject.

The selected candidate will have to furnish security in cash, Government Promissory Note or Savings Bank deposit to the amount of Rs. 500.

Applications with copies of testimonials will be received up to the 30th instant.

TRIPURA CHARAN ROY, General Manager.

Ranchi, the 17th September 1902. (681—1)

Notice.

WANTED temporarily from November next—
1 Native Surveyor at Rs. 50 per month.
3 Native Surveyors at Rs. 40 each per month.
8 Amins at Rs. 35 each per month.
12 Amins at Rs. 20 each per month.

Applications will be received by the undersigned up to 21st October 1902.

JYOTISH CHANDRA SEN,
Deputy Collector in charge,
for Deputy Commissioner.

Jalpaiguri, the 4th September 1902.

Notice.

WANTED 12 Bengali-knowing Inspectors on a monthly salary of Rs. 30 each and 80 Bengali-knowing Amins on a monthly salary of Rs. 25 each for Survey and Settlement work in the Sunderbans during the ensuing cold weather. Applicants must be good Plane-table Surveyors, and should also be able to prepare the necessary measurement papers.

Wanted also 8 Clerks on Rs. 30 each, 8 Muharrirs on Rs. 25 each, and 8 Muharrirs on Rs. 20 each per mensem for Settlement work between November 1902 and March 1903. The Clerks and Muharrirs will be granted travelling allowance at the rates sanctioned in the Civil Service Regulations.

Applications, with copies of testimonials, will be received by the undersigned up to the 25th October 1902.

D. SUNDER, Commissioner, Sunderbans

Sunderbans Commissioner's Office, Alipur, the 10th September 1902.

NOTICE.

WANTED by the Jalpaiguri District Board a Sub-overseer for Miscellaneous Improvement Works on a monthly salary of Rs. 50, plus fixed monthly horse allowance of Rs. 15. Applicants must be qualified under Rule 7 (*d*) of the rules published in Bengal Government Notification No. 3334L S.G., dated 20th December 1901.

Applications with copies of testimonials will be received by the undersigned up to noon of the 20th October 1902.

JAS. BEALE, District Engineer, Jalpaiguri.

Jalpaiguri, the 19th September 1902. (749—3)

Notice.

WANTED a Sub-Inspector of Schools on a salary of Rs. 50 a month and travelling allowance under the Civil Service Regulations. He must be qualified under the rules published under Bengal Government Notifications No 486T.G., dated the 2nd September 1893, and No. 105T.G., dated the 24th May 1899. The selected candidate will have to give an agreement to serve at least for three years

Applications with copies of testimonials and necessary certificates will be received by the undersigned up to the 18th October 1902.

E. E. FORRESTER,
Chairman, District Board, Bhagalpur.

Bhagalpur, the 18th September 1902. (689—2)

Advertisement.

WANTED temporarily, for about a year, two Surveyors with at least five years' experience of surveying, levelling, &c., routes of proposed roads on a consolidated salary of Rs. 75 per month each and two estimator-draftsmen with good experience in the preparation of road projects on a salary of Rs. 60 per month each.

Applications with copies of testimonials must be sent to the undersigned on or before the 10th October 1902. Selected candidates must be prepared to join on or before the 20th October.

N. G. BANERJEE, District Engineer, Manbhum.

Purulia, the 19th September 1902. (683—2)

Notice.

NATIONAL BANK OF INDIA, LIMITED.

THE Transfer Books of the Bank will be closed from 20th September to 27th September, both days inclusive.

W. TOUCH, Manager.

Calcutta, the 19th September 1902. (686—1—1175)

Notice.

THE Stamp Department of the Calcutta Collectorate will, for the transaction of urgent business, remain open from 11 A.M. to 1 P.M. on the following days of the *Durga Puja* holidays:—

6th October 1902.	13th October 1902.
7th " "	14th " "

15th October 1902.

CHUNDER NARAIN SINGH,

Collector of Stamp Revenue.

Calcutta Collectorate, the 18th September 1902.

The Bengal Stone Company, Limited.

A GENERAL MEETING of the Members of the above Company will be held at the Registered Office, No. 100, Clive Street, Calcutta, on Friday, the 26th September 1902, at 3 P.M., in pursuance of section 75 of the Indian Companies Act of 1882, to transact such business as may be brought before the meeting.

GEORGE HENDERSON & Co.,

Managing Directors and Secretaries.

Calcutta, the 19th September 1902 (677—1—1173)

Currency Notes.

THE following Currency Note of the Calcutta Circle is stated to have been destroyed, and payment of its value has been claimed by the person whose name is placed against the number. Any other person claiming a right to it is warned to communicate at once with the undersigned:—

Notes wholly destroyed.

Register No.	No. of Note.	Value.	Name of claimant.
		Rs.	
W192 of 1902-1903	$\frac{AA}{30}$—15267	50	Anghore Chand Banerjee, Pleader, Contai.

F. BREWIN, Assistant Comptroller-General, in charge, Paper Currency.

Paper Currency Department, the 19th September 1902.

Treasure Trove.

IT is hereby notified under section V of Act VI of 1878 that in the month of June 1900 150 silver coins, weighing 148¾ tolas, valued at Rs. 83-10-9, were found by Ramigadu and Guruvadu while sinking a well in the compound of the house of Ramachandra Reddy, village Magistrate of Uligallu district in Rayachoti taluq

2. All persons claiming the said treasure or part thereof are hereby required to appear personally or by agent before the Collector of Cuddapah at his office on the 2nd February 1903, in view to the matter being enquired into and determined according to law.

(Illegible), for Collector.

Cuddapah, the 7th September 1902.

For Sale

THE right to coal and all minerals in villages Amlabad, Koradih, thana Chas, district Manbhum.

Apply to

BABU K. P. GHOSH,

Agent, Chota Nagpur Raj, Ranchi.

(612—4—1172)

Desai and Parbuttia Tea Company, Limited.

NOTICE.

THE Ordinary half-yearly General Meeting of the shareholders will be held at the Registered office of the Company, No. 100, Clive Street, on Tuesday, the 30th September, at 4 P.M.

By order of the Directors,

GEORGE HENDERSON & Co.,

Secretaries.

100, Clive Street, Calcutta, the 15th September 1902.

(747—1—1180)

ESTATE EBENEZER PLOMER, DECEASED.

Statutory Notice to creditors.

PURSUANT to section 320 of Act X of 1865 and section 42, Act XXVIII of 1866, Notice is hereby given that all persons having claim against the Estate of Ebenezer Plomer, formerly of Lucknow, India, and lately of Elm Bank Acton, in the county of Middlesex in England, should send in particulars of such claims to the undersigned, the attorneys for the executors to the said estate, at No. 6, Strand, Calcutta, on or before the 31st day of October 1902, after which date no claims will be admitted and the assets of the estate will be distributed. All persons indebted to the estate are also requested to pay such claims to the undersigned.

DIGNAM & Co., Attorneys,

for W. H. Fitze and John Albert Banyard, the

Executors.

6, Strand Road, dated 19th September 1902.

(750—1—1136)

The Sakri Sugar Refinery and Distillery Company, Limited, in Liquidation.

TO be sold, pursuant to the orders of the High Court, Calcutta, the whole of the immovable and movable property of the Sakri Sugar Refinery and Distillery Company, Limited, in liquidation.

Messrs. Sinclair, Murray and Company will sell by auction at 1 P.M. on Tuesday, the 30th day of September 1902, at their offices, No. 1, Clive Row, Calcutta, under instructions from Messrs. H. T. Peter and J. C. Shorrock, the Official Liquidators, unless previously disposed of by private contract, all the property of the abovenamed Company in one lot, including the land and other immovable property, buildings, sheds, machinery, working gear, general plant, stores and other effects of the Company.

The land of the Company comprises about 22 bighas and 14 cottahs in the district of Darbhanga, and is held under two pottahs dated the 25th day of August 1896 granted by Babus Jodu Nandan Sing and Bunshidhari Sing to the late Mr. E. E. A. Kuster for the term of 14 years, with option of renewal, subject to the payment of the annual sum for rent and road cess of Rs. 428-1, or thereabouts.

The Mill buildings and premises are in good working order, and the Mill is capable of turning out daily *250 maunds of refined sugar and 250 gallons of distilled spirit.*

Further particulars of the property can be obtained from Messrs. H. T. Peter and J. C. Shorrock, the Official Liquidators, of 100, Clive Street, Calcutta, or from Messrs. Orr, Robertson, and Burton, No. 6, Old Post Office Street, Calcutta, Solicitors for the Official Liquidators.

Calcutta, the 19th September 1902. (680—1—1182)

Notice.

UNDER the provisions of Rule XX, Part I of the Rules for the Care and Use of Government Cemeteries, the following Monuments, having become ruinous, will be treated at the next repairs in such manner as the Officer in charge of the Cemetery may decide to be necessary for the maintenance of the Cemetery in decent order, unless any person will undertake to bear the cost of repairs:—

OLD CEMETERY, BARRACKPORE.

Catherine Macvitie	1827
Sergt.-Major C. Finch	1815
Jane Vyall	1819
Lieut. T. Macan	1809
George Manley	1809
Ensign George Downie Cullen ...	1823
Capt. Birkett	1846
Norman Macleod	1824
William McCluskie	1824
Henry William Maylark	1860
Major James Grant	1869
Sergt.-Major John Henry Luncus ...	1839
Lieut.-Col. William Lally	1805
Elizabeth Frazer	1793
Mary Ann Farrel	1840
Harriot White	1816
Thomas Green White	1793
Emily Burrett	1842
Samuel Twemlow	1825
Lieut. E. C. Macpherson	1832
Lieut.-Col Clayton	1804
Sergt.-Major T. Holland	1850
Sarah Holland	1850
Capt. T. Haslam	No date.
Robert Westfield	1865
Martin Goulder	1851
Isabella Goulder	1851
George Blundell	1839
Richard Bailey	1843
Elizabeth Bailey	1845
Richard Bailey	1839
Walter Pelham Burn	1854
Col. Charles Coventry	1854
James Lyle Algeo	No date.
Alice Jane Seymour	1856
Constance Ellinor Lance	1858
Charlotte Caroline Baker	1856
Maria Eliza Marshall	1860
James Athill Turner	1843
Sarah McCullum	1862
Susan Douglas Everard	1862
Theodora Elizabeth White	1866
Lieut. John Watson	1860
Charles Andrew McMullin	1862
Charles Sharp	1860
Mary James ...	1860
Capt. W. C L. Ryves	1860
Lieut. Powell	1859
Major W Sperling	1859
Capt. Philip Rubie	1860
Lieut. A H. Carter	No date.
Richard Clerke	1847
Fanny Sophia Prior	1847
Charlotte Mary Coley	1859
Mary Bertha Coley	1858

C. H. BARLOW, Chaplain.

Barrackpore, the 8th September 1902.

Board of Examiners.

THERE is a vacancy for a *Hindi Pandit* in the office of the Board of Examiners to act for six months for the permanent incumbent proceeding on sick leave on the 1st October 1902. Acting allowance Rs. 20 per mensem. The mother-tongue of the applicant must be Hindi; he should also possess a fair knowledge of English. Applications in English and Hindi in the applicant's own handwriting with testimonials should reach the undersigned on or before the 30th September 1902.

GEORGE RANKING, M.D., LT.-COL., I.M.S.,
Secretary, Board of Examiners.

Calcutta, the 11th September 1902.

Estate Alexander Telfer Sharpe, deceased.

NOTICE is hereby given that all creditors and other persons having any claims against the estate of the deceased abovenamed are hereby required to send in writing the particulars thereof to Messrs King, Hamilton & Co., Calcutta, on or before the 24th day of October 1902, after which date the undersigned will distribute the assets of the estate of the said deceased amongst the parties entitled thereto, having regard to the claims of which he has then had notice.

And notice is hereby further given that the undersigned will not be liable for the assets or any part thereof so distributed to any person of whose claim he shall not have had notice at the time of such distribution.

Dated the 4th day of September 1902.

W. H. TAYLOR, Administrator of the property and credits of the deceased.

No. 7 Hare Street, Calcutta. (615—3—1092)

Administrator-General's Office.

NOTICE.

ADMITTED claims against the undermentioned Estates are payable on Tuesdays and Fridays:—

ESTATES.	Claims in full or dividend	Rate of dividend per rupee.	REMARKS.
1	2	3	3
* Miles, Frederick Hudson late an Officiating District Loco. Superintendent of North-Western Railway.	Claims in full.		
* Reynolds, Peter George, late a British subject and a Boiler maker, Loco. Department, Great Indian Peninsula Railway.	Ditto.		
Stephen, Carr (Senior), late a British subject of Lahore and a Barrister-at-Law.	1st dividend	At 2 annas 10·65 pies per rupee.	
Thelwall, Berla Alfred, a British subject, late of Rungamati in the district of Jalpaiguri, Tea Planter.	Ditto ...	At 3 annas 7·35 pies per rupee.	

N.B—The surplus of the Estate marked * is carried over to the account of the persons interested and no other claims against the Estate can be admitted.

Persons presenting receipts for payment are requested at the same time to produce the Registry certificates granted to them by this office.

HENRY T. HYDE, Administrator-General of Bengal.

Calcutta, the 23rd September 1902. (751—1)

Notification.

TO be peremptorily sold by the Registrar of the High Court of Judicature at Fort William in Bengal in its Ordinary Original Civil Jurisdiction in his sale-room in the Court-house on Saturday, the 13th day of December 1902, at the hour of 12 o'clock noon, pursuant to a decree and order of the said Court, made in suit No. 476 of 1901 (wherein Panch Cowrie Mitter is plaintiff and Narain Chunder Bysack is defendant), and dated, respectively, the 8th day of August 1901 and 22nd day of July 1902, the following property:—

Lot I.—No. 3, Kashi Ghose's Lane, a two-storied brick-built dwelling-house, together with the land whereon the same is erected and built, containing by estimation 2 cottahs, more or less, and bounded on the north by a passage 6 feet broad set apart in course of the partition for ingress and egress, and partly by Sreemutty Amadkumari Dassee's dwelling-house, on the south by a narrow lane formed by a filled-up municipal drain, on the east by the dwelling-house of Chunder Kumar Bysack, and on the west by the tenanted house of Nitya Lall Bysack, being holding No. 266, block No 25 in the north division, and paying an annual revenue of Re. 1-7-8 to the Collector of Calcutta.

The abstract of title and conditions of sale may be seen at the office of the said Registrar or at the office of Babu Bhoobun Mohun Das at No. 6, Old Post Office Street, on any day before the sale, and will be produced at the sale.

W. R. FINK, Registrar.

Bhoobun Mohun Das, Plaintiff's Attorney.

Calcutta, 6, Old Post Office Street, the 1st day of September 1902. (674—1—1181)

The Swadeshi Bhandar Limited.
(In liquidation.)

NOTICE is hereby given that a special resolution has been passed for the voluntary winding up of the abovenamed Company, and that the undersigned has been appointed liquidator. Creditors are requested to present their claims to him within a fortnight from the date of this notice.

BHUPENDRA NATH BASU, 5, Old Post Office Street.

Calcutta, the 23rd September 1902. (753—1—1184)

Lost

THE Government Promissory Note No. 008771, of the 3½ per cent. of 1854-55, for Rs. 500, originally standing in the name of Abinash Chandra Singha, the proprietor, by whom it was never endorsed to any other person. Payment of the above Note and the interest thereupon have been stopped at the Public Debt Office, Bank of Bengal, and application is about to be made for the issue of Duplicate in favour of the proprietor.

Name of Advertiser—NOGENDRA NATH MUKERJEE, Beadon Pharmacy, 843 Upper Chitpore Road, Calcutta.

(607—3—1085)

Lost

UPPER HALF of Calcutta Port Trust Debenture No. 417 of 4 per cent. Loan of 1900 for Rs. 1,000. Payment of principal and interest of this Debenture stopped and application made for issue of Duplicate to me, the proprietor—

RAM COMUL GUPTA.

Burdwan the 11th September 1902. (632—3—1168)

Lost.

THE Government Promissory Notes—

No. 033338 4 per cent. 1865 for Rs. 500.
„ 035763 „ „ „ „ 500.
„ 037865 „ „ „ „ 500.

The first originally stood in the name of Sree Nath Mukerjee, the proprietor, by whom it was never endorsed to any other person.

The second in the name of G. H. Blaquiere, Exr. of S. Blaquiere.

The third in the name of Doyal Chunder Sabooyee and were last endorsed to Sree Nath Mukerjee, the proprietor, by whom they were never endorsed to any other person. Payment of the above notes and the interest thereupon have been stopped at the Public Debt Office, Bank of Bengal, and application is to be made for accrued interest, and for the issue of duplicates in favour of the proprietor after two years from the date of last advertisement.

Name of the Proprietor—Sreemoti Brojo Kumari Dabi, *alias* Brojo Bala Dabi, certificate-holder, to the estate of Sree Nath Mukerjee.

Residence—Guptipara (Hugli). (746—1—1183)

Lost

THE Government Promissory Note No. 080638 of the 3½ per cent. loan of 1842-43 for Rs. 1,000, originally standing in the name of the Bank of Bengal, and last endorsed to Banwari Mukunda Deb, the proprietor, by whom it was never endorsed to any other person. Payment of the above note and the interest thereupon have been stopped at the Public Debt Office, Bank of Bengal, and application is to be made for accrued interest and for the issue of Duplicate in favour of the proprietor after two years from the date of last advertisement.

Name of the Proprietor—Banwari Mukunda Deb, of Banwaribad, Murshidabad.

Barwaribad, the 9th September 1902. (635—3—1179)

Lost

THREE Bengali Conveyances of my premises, No. 26 (old No. 18-3), Huzooreemull's Lane, Calcutta (holding No 398), viz. :—One, dated 23rd Magh 1266, executed by Huranee Dassee in my favour, and two previous ones of the year 1252. Any one restoring the same to me, the sole owner, will be rewarded.

NIDHOO MONEY DASSEE.

(No. 26, Huzooreemull's Lane.)

Calcutta, the 23rd September 1902. (752—1—1185)

In the 2nd Court of Subordinate Judge of Gaya.

MONEY EXECUTION CASE No. 358 OF 1902.

Babu Bindeshri Prashad and others, decree-holders *versus* Raja Ramesher Prashad Narain Singh judgment debtor.

THE following property of the judgment-debtor will be sold by the Nazir of the Gaya Judge's Court, in the Gaya Civil Court sale-room at 12 o'clock noon, on the 3rd November 1902, for realisation of the decretal amount Rs. 10,451-13-7 :—

Sixteen annas proprietary right of Raja Ramesher Prashad Narain Singh of mauza Rajouli *asli* with *dakhli* appertaining to mahal Amawan, Bansgopal, pargana Jarra, zilla Gaya, bearing tauzi No. 2496, and jama Sadar of the whole mahal being Rs. 1,355 4. The value of the property as stated by the decree-holder is Rs. 40,000.

PURNO CHUNDER ROY, Subordinate Judge.

Gaya, the 18th September 1902. (744—1)

In the Court of District Judge of Gaya.

EXECUTION CASE No. 39 OF 1902.

Babu Kailashpati Narain Singh and others, decree-holders, *versus* Raja Ramesher Pershad Narain Singh, judgment-debtor.

THE following property belonging to the judgment-debtor will be sold by auction in the sale-room of Gaya Judge's Court, on the 3rd day of November 1902, at 10 A.M., in the execution of the decree for Rs. 47,390-3-2, in the abovementioned case :—

Sixteen annas of mauza Rajowli *asli* with *dakhli* situated in mahal Amawan, Bunsgopal, in pargana Jarrah, in zilla Gaya, bearing tauzi No. 2495, the jama Sadar of the mahal being Rs. 1,355-4 milkiat (proprietary interest) of the judgment-debtor Raja Ramesher Pershad Narain Singh. Approximate value Rs. 40,000.

Be it known that the said property with other properties is mortgaged under decree for 12 lacs in favour of Lalanji and Chakanji of Benares.

C. W. E. PITTAR, District Judge.

Gaya, the 19th September 1902. (745—1)

NOTICE.
In the 2nd Court of Munsif, Howrah.

TITLE SUIT No. 964 OF 1902.

NOTICE is hereby given, under section 30 of the Code of Civil Procedure, to all parties interested that Shaik Abdul, son of late Sahabu Shaik, of Ghoosery, in Howrah, has, on behalf of the Muhammadan community of Howrah, instituted in this Court the abovementioned suit against defendants Shaik Khaji and Shaik Chatu for the declaration of their right in, and for the recovery of, a *dekchi* and its cover, valued at Rs. 27, and alleged to belong to the said community, and that the 5th November 1902 has been fixed for the settlement of issues in the said suit.

PURNA CHANDRA DE, Munsiff.

Howrah, the 18th September 1902. (684—1)

NOTICE.

In the Third Court of the Munsif of Sudharam, District Noakhali.

PRESENT:

Babu Ashutosh Goswami.

OTHER SUIT No. 209 OF 1902.

Fakir Chand Pal and others, plaintiffs, *versus* Chandra Nath Ghosh, defendant.

WHEREAS Chandra Nath Ghosh, son of late Shambhoo Chandra Ghosh, an inhabitant of village Joynarainpur, having obstructed a boat-passage running east and west through the village of Joynarainpur in thana Begamgunge, district Noakhali, and leading to Chandragunge Hât, &c., Batua Gopalpur Hât, Begamgunge Sub-Registry office, Chaumahini Hât, Begamgunge thana, Karimpur, Fazilpur, Chand Kashimpur, Tita Hajra, &c, which is said to have been used by the public for a long time, Fakir Chand Pal, son of late Ram Sankar Pal, of Joynarainpur, and others have instituted a suit (No. 209 of 1902) which is now pending in the 3rd Court of Munsif of Sudharam, for removal of the abstruction by establishing right-of-way. It is notified for information of the people residing in the neighbourhood of the aforesaid villages and public in general that any one who may be interested in the aforesaid boat-passage is at liberty to join as plaintiff before 7th November 1902, which is the date for hearing of the above suit, and on his failure to do so the case will be disposed of in his absence.

ASHUTOSH GOSWAMI,

Offg. Munsif of 3rd Court, Sudharam

Noakhali, the 13th September 1902. (685—1)

INSOLVENT NOTICES.

In the Court for the Relief of Insolvent Debtors at Calcutta.

In the matter of MUTTY LAL GHOSE, an insolvent.

On Wednesday, the 3rd day of September instant, it was ordered that the matters of the petition of the said insolvent be heard on Tuesday, the 2nd day of December next, and that the said insolvent do then attend to be examined before the said Court.

Charu Chunder Bose, Attorney. (641—2)

In the matter of SHIB CHANDRA CHATTERJEE, an insolvent.

On Friday, the 5th day of September instant, it was ordered that the matters of the petition of the said insolvent be heard on Tuesday, the 2nd day of December next, and that the said insolvent do then attend to be examined before the said Court.

Norendra Nath Mitra, Attorney. (642—2)

In the matter of JOHN JORDAN ZEMIN, an insolvent.

On Wednesday, the 3rd day of September instant, it was ordered that the matters of the petition of the said insolvent be heard on Tuesday, the first Court day in January next, and that the said insolvent do then attend to be examined before the said Court.

Ghosh and Kar, Attorneys. (643 — 2)

In the matter of RAM NATH KHETTRY *alias* CHOTA LAUL KHETTRY, an insolvent

On Tuesday, the 9th day of September instant, it was ordered that the matters of the petition of the said insolvent be heard on Tuesday, the 2nd day of December next, and that the said insolvent do then attend to be examined before the said Court.

Akshay Kumar Mitter, Attorney. (644 —2)

In the matter of REGINALD BRAE, an insolvent.

On Thursday, the 14th day of August last, it was ordered that the matters of the petition of the said insolvent be heard on Tuesday, the 25th day of November next, and that the said insolvent do then attend to be examined before the said Court.

Insolvent in person. (645—2)

In the matter of ISABELLA MATILDA ETHEL AGACY, CHARLES LAWRENCE AGACY, and ALFRED JAMES AGACY, insolvents.

On Monday, the 18th day of August last, it was ordered that the matters of the petition of the said insolvents be heard on Tuesday, the 25th day of November next, and that the said insolvents do then attend to be examined before the said Court.

Insolvents in person. (646—2)

In the matter of EDWIN HENRY JOAKIN, an insolvent.

On Wednesday, the 13th day of August last, it was ordered that the matters of the petition of the said insolvent be heard on Tuesday, the 25th day of November next, and that the said insolvent do then attend to be examined before the said Court.

Insolvent in person. (647 —2)

In the matter of BONOWARY LAL BOSE, an insolvent.

On Monday, the 11th day of August last, it was ordered that the matters of the petition of the said insolvent be heard on Tuesday, the 25th day of November next, and that the said insolvent do then attend to be examined before the said Court.

C. A. Smith, Attorney. (648 —2)

In the matter of BEHARY LAUL DEY, an insolvent

On Thursday, the 7th day of August last, it was ordered that the matters of the petition of the said insolvent be heard on Tuesday, the 25th day of November next, and that the said insolvent do then attend to be examined before the said Court.

Sarat Chunder Dutt, Attorney. (649—2)

In the matter of JOTISH CHUNDER PORAMANIC, an insolvent.

On Wednesday, the 20th day of August last, it was ordered that the matters of the petition of the said insolvent be heard on Tuesday, the 25th day of November next, and that the said insolvent do then attend to be examined before the said Court

S. Md. Sultan Alum, Attorney. (650—2)

In the matter of JADAV CHANDRA SIKDAR and BISWAMBER SIKDAR of Abaipur, in the district of Jessore, now residing in Calcutta and lately carrying on business in copartnership as traders in jute at Nos 86-87, Sobhabazar Street, in the town of Calcutta, and also at various stations in the mofussil, under the name and style of B. Sikdar Sons and Company, and also under the name and style of R. David (?), L. M. Sikdar and also of Jadub Chunder Bissumbhar Sikdar, insolvents

On Thursday, the 4th day of September instant, it was, on the petition of Kedar Nath Roy, residing and carrying on business as banker and merchant at No. 13, Sobhabazar Street, in the town of Calcutta, a creditor of the said insolvents, adjudged that the said Jadav Chandra Sikdar and Biswamber Sikdar have committed an act of insolvency under the provisions of the Act XI Vic. Cap. XXI, and by another order of the same date the estate and effects of the said insolvents were vested in the Official Assignee.

A. K. Guha, Attorney. (651—2)

In the matter of ROGER JOHN DENNET, an insolvent.

On Wednesday, the 27th day of August last, it was ordered that Tuesday, the 25th day of November next, be appointed for the further hearing of this matter, and that, unless cause be shown to the contrary on that day, the said insolvent be discharged personally as well as to his after-acquired property from all liabilities for debts, claims, and demands of and against the said insolvent at the time of the filing of his petition for relief.

T. H. Wilson & Co., Attorneys. (652—2)

In the matter of JOHN WILLIAM HODGES, an insolvent.

On Friday, the 29th day of August last, it was ordered that Tuesday, the 25th day of November next, be appointed for the further hearing of this matter, and that, unless cause be shown to the contrary on that day, the said insolvent be discharged personally as well as to his after-acquired property from all liabilities for debts, claims, and demands of and against the said insolvent at the time of the filing of his petition for relief.

Fox and Mandal, Attorneys. (653—2)

Chief Clerk's Office, the 16th September 1902.

In the matter of SUTTYA LAL SHAW, an insolvent.

On Friday, the 22nd day of August last, it was ordered that the matters of the petition of the said insolvent be heard on Tuesday, the 25th day of November next, and that the said insolvent do then attend to be examined before the said Court.

Pannalall De, Attorney. (694—2)

In the matter of SATYA CHARAN BANNERJEE, an insolvent.

On Friday, the 19th day of September instant, it was ordered that the matters of the petition of the said insolvent be heard on Tuesday, the 2nd day of December next, and that the said insolvent do then attend to be examined before the said Court.

S. C. Ghose, Attorney. (695—2)

In the matter of SADASOOK SEPONEY, an insolvent.

On Tuesday, the 2nd day of September instant, it was ordered that the matters of the petition of the said insolvent be heard on Tuesday, the 2nd day of December next, and that the said insolvent do then attend to be examined before the said Court.

A. K. Mittra, Attorney. (696—2)

In the matter of VICTORIA LEWIS, an insolvent.

On Monday, the 25th day of August last, it was ordered that the matters of the petition of the said insolvent be heard on Tuesday, the 25th day of November next, and that the said insolvent do then attend to be examined before the said Court.

Insolvent in person. (697—2)

In the matter of MUTTY LALL BURMAN KHETTRY, an insolvent.

On Monday, the 25th day of August last, it was ordered that the matters of the petition of the said insolvent be heard on Tuesday, the 25th day of November next, and that the said insolvent do then attend to be examined before the said Court.

P. N. Banerjee, Attorney. (698—2)

In the matter of SHAIKH AFAZUDDIN AHMED, an insolvent.

On Thursday, the 11th day of September instant, it was ordered that the matters of the petition of the said insolvent be heard on Tuesday, the 2nd day of December next, and that the said insolvent do then attend to be examined before the said Court.

N. L. Mullick, Attorney. (699—2)

In the matter of JOHN FORDHAM, an insolvent.

On Saturday, the 30th day of August last, it was ordered that the matters of the petition of the said insolvent be heard on Tuesday, the 2nd day of December next, and that the said insolvent do then attend to be examined before the said Court.

Insolvent in person. (700—2)

In the matter of ANGELICA MAGDALENE HENWOOD *alias* PHILIPPE, an insolvent.

On Thursday, the 28th day of August last, it was ordered that the matters of the petition of the said insolvent be heard on Tuesday, the 2nd day of December next, and that the said insolvent do then attend to be examined before the said Court.

Insolvent in person. (701—2)

In the matter of BISSESSER LAL AGARWALLA, an insolvent.

On Saturday, the 30th day of August last, it was ordered that the matters of the petition of the said insolvent be heard on Tuesday, the 2nd day of December next, and that the said insolvent do then attend to be examined before the said Court.

R. C. Mitter, Attorney. (702—2)

In the matter of HANOOTHRAM LOHIA, an insolvent.

On Monday, the 1st day of September instant, it was ordered that the matters of the petition of the said insolvent be heard on Tuesday, the 2nd day of December next, and that the said insolvent do then attend to be examined before the said Court.

Kali Mohun Rukhit, Attorney. (703—2)

In the matter of THOMAS ALEXANDER BLAKE, an insolvent.

On Thursday, the 11th day of September instant, it was ordered that the matters of the petition of the said insolvent be heard on Tuesday, the 2nd day of December next, and that the said insolvent do then attend to be examined before the said Court.

Leslie and Hinds, Attorneys. (704—2)

In the matter of JAMES WRIGHT LEWIS, an insolvent.

On Monday, the 15th day of September instant, it was ordered that the matters of the petition of the said insolvent be heard on Tuesday, the 2nd day of December next, and that the said insolvent do then attend to be examined before the said Court.

Insolvent in person. (705—2)

In the matter of BAIKANTHA NAUTH CHATTERJEE, an insolvent.

On Tuesday, the 16th day of September instant, it was ordered that the matters of the petition of the said insolvent be heard on Tuesday, the 2nd day of December next, and that the said insolvent do then attend to be examined before the said Court.

Rajkissore Bysack, Attorney. (706—2)

In the matter of STANLEY JAMES STEVENSON, an insolvent.

On Monday, the 15th day of September instant, it was ordered that the matters of the petition of the said insolvent be heard on Tuesday, the 1st Court day in January next, and that the said insolvent do then attend to be examined before the said Court.

O. Camell, Attorney. (707—2)

In the matter of BHUPENDRO NATH DEY, an insolvent.

On Monday, the 15th day of September instant, it was ordered that the matters of the petition of the said insolvent be heard on Tuesday, the 2nd day of December next, and that the said insolvent do then attend to be examined before the said Court.

Monmotho Nath Sen, Attorney. (708—2)

In the matter of GEORGE MANSFIELD PHILIPS, an insolvent.

On Saturday, the 13th day of September instant, it was ordered that the matters of the petition of the said insolvent be heard on Tuesday, the 2nd day of December next, and that the said insolvent do then attend to be examined before the said Court.

C. A. Smith, Attorney. (709—2)

In the matter of ELVINA FLORENCE OTTO, an insolvent.

On Saturday, the 13th day of September instant, it was ordered that the matters of the petition of the said insolvent be heard on Tuesday, the 2nd day of December next, and that the said insolvent do then attend to be examined before the said Court.

H. C. Ghose, Attorney. (710—2)

In the matter of FREDERICK GRAHAM STEEL, an insolvent.

On Monday, the 25th day of August last, it was ordered that Tuesday, the 25th day of November next, be appointed for the further hearing of this matter, and that, unless cause be shown to the contrary on that day, the said insolvent be discharged personally as well as to his after acquired property from all liabilities for debts, claims, and demands of and against the said insolvent at the time of the filing of his petition for relief.

Dignam & Co., Attorneys. (711—2)

In the matter of JOHN NICHOLAS, an insolvent.

On Thursday, the 7th day of August last instant, it was ordered that Tuesday, the 2nd day of December next, be appointed for the further hearing of this matter, and that, unless cause be shown to the contrary on that day, the said insolvent be discharged personally as well as to his after-acquired property from all liabilities for debts, claims, and demands of and against the said insolvent at the time of the filing of his petition for relief.

Gregory and Jones, Attorneys. (712—2)

In the matter of ANUKUL CHUNDER GUHA, an insolvent.

Notice that an application for an *ad-interim* protection order has been this day made by the said insolvent, and that such application will be heard and disposed of by the Acting Commissioner of the Insolvent Court on Thursday, the 2nd day of October next, at the hour of half-past ten o'clock in the forenoon.

☞ Any creditor of the said insolvent desirous of opposing such application must appear before the said Court at the time and place aforesaid.

P. N. Bose and Sarkar, Attorneys. (713—1)

In the matter of BREEJ MOHUN DOOBAY, an insolvent.

On the 26th day of November 1901, by an order of this Court, the said insolvent was adjudged entitled to his personal discharge under the Act XI Vic., Chap. XXI, as to all persons named in his schedule as creditors or claiming to be creditors respectively. And it was further ordered that the Official Assignee of this Court and the assignee of the estate and effects of the said insolvent be at liberty out of the assets belonging to the estate of the said insolvent to pay to Mr. N. C. Bose, the Attorney for the said insolvent, his costs of, and in connection with, this matter, to be taxed by the taxing officer of this Court.

N. C. Bose, Attorney.

Manuel and Augurwallah, Attorneys. (714—1)

In the matter of DOYAL PROSAD ADHYA, an insolvent.

On Wednesday, the 4th day of June last, by an order of this Court the said insolvent was adjudged entitled to his personal discharge under the Act XI Vic., Chap. XXI, as to all persons named in his schedule as creditors or claiming to be creditors respectively.

Pannalall De, Attorney. (715—1)

In the matter of AKHOY KUMAR MOOKERJEE, an insolvent.

On Tuesday, the 19th day of August last, by an order of this Court the said insolvent was adjudged entitled to his personal discharge under the Act XI Vic., Chap XXI, as to all persons named in his schedule as creditors or claiming to be creditors respectively.

M. M. Chatterjee, Attorney.

Morgan & Co., Attorneys. (716—1)

In the matter of JOHN NICHOLAS, an insolvent.

On Tuesday, the 5th day of August last, by an order of this Court, the said insolvent was adjudged entitled to his personal discharge under the Act XI Vic., Chap. XXI, as to all persons named in his schedule as creditors or claiming to be creditors respectively.

Gregory and Jones, Attorneys. (717—1)

In the matter of MOSES JUDAH, an insolvent.

On the 9th day of January 1900, by an order of this Court, the said insolvent was adjudged entitled to his personal discharge under the Act XI Vic., Chap. XXI, as to all persons named in his schedule as creditors or claiming to be creditors respectively.

Charu Chunder Bose, Attorney. (718—1)

In the matter of ROGER JOHN DENNETT, an insolvent.

On Tuesday, the 5th day of August last, by an order of this Court, the said insolvent was adjudged entitled to his personal discharge under the Act XI Vic., Chap. XXI, as to all persons named in his schedule as creditors or claiming to be creditors respectively.

T H. Wilson & Co., Attorneys. (719—1)

In the matter of CAMPBELL GARDENER BAXTER, an insolvent.

On the 1st day of May 1900, by an order of this Court, the said insolvent was adjudged entitled to his personal discharge under the Act XI Vic., Chap. XXI, as to all persons named in his schedule as creditors or claiming to be creditors respectively.

Leslie and Hinds, Attorneys. (720—1)

In the matter of PEARY LAL SARAOGY, an insolvent.

On Tuesday, the 5th day of August last, by an order of this Court, the said insolvent was adjudged entitled to his personal discharge under the Act XI Vic., Chap. XXI, as to all persons named in his schedule as creditors or claiming to be creditors respectively.

Rames Chandra Basu, Attorney. (721—1)

In the matter of SREEKRISTO DASS BUKSHEE, an insolvent.

On Tuesday, the 5th day of August last, by an order of this Court, the said insolvent was adjudged entitled to his personal discharge under the Act XI Vic., Chap. XXI, as to all persons named in his schedule as creditors or claiming to be creditors respectively.

A. H. Gillanders, Attorney. (722—1)

In the matter of SURJEE COOMAR BYSACK, BHARAT CHUNDER BASAK, SARAT CHUNDRA BYSACK, BHEEM CHUNDER BYSACK, and CHAROO CHUNDER BYSACK, insolvents.

On Tuesday, the 2nd day of September instant, it was specially ordered that this matter be set down for hearing on Tuesday, the 25th day of November next, with liberty to the said insolvents at the said hearing to apply that the order of adjudication made in this matter on the 5th day of July last be annulled, and that the vesting order made thereon be discharged. And it was further ordered that notice of the day so appointed for the said hearing and of the said application be served upon all the creditors of the said insolvents by the messenger of this Court.

R. K. Bysack, Attorney. (723—1)

In the matter of HURRY CHURN GHOSH and AMRITA LALL DEY, insolvents.

On Tuesday, the 4th day of February last, it was ordered that, subject to payment to Albert Birmingham Miller, Esq., the Official Assignee of this Court and the assignee of the estate and effects of the said insolvents, of his commission and all costs, charges, and expenses lawfully due to him, the petition filed by the said insolvents on the 7th February 1901 seeking for relief under the provisions of the said Act be withdrawn, and the vesting order made thereon be discharged, provided always that all acts or things done by the said assignee or other person or persons acting under his authority prior to this order shall be good and valid, and shall not be annulled or in any wise affected thereby, and it was further ordered that the said Official Assignee do out of the assets now in his hands belonging to the estate of the said insolvents retain his commission and costs, charges, and expenses as aforesaid, and do deliver over to Kartick Chunder Ghose, the trustee appointed by the deed of composition, upon his receipt the balance remaining in his hands, together with all other the estate and effects, goods, books and papers now remaining in the hands of the said assignee belonging to the estate of the said insolvents.

A. K. Thakur, Attorney. (724—1)

In the matter of DOORGA DUTT JOWALA DUTT, insolvents.

On Tuesday, the 2nd day of September instant, it was ordered that, subject to payments to Albert Birmingham Miller, Esq., the Official Assignee of this Court and the assignee of the estate and effects of the said insolvents, of his usual commission and all costs, charges, and expenses lawfully due to him and the costs of the attorney of the insolvents incurred in this matter, the petition filed by the said insolvents on 25th June last seeking for relief under the provisions of the said Act be withdrawn, and the vesting order made thereon be discharged, provided always that all acts or things done by the said assignee or other person or persons acting under his authority prior to this order shall be good and valid, and shall not be annulled or in any wise affected thereby, and it was further ordered that the said Official Assignee do out of the moneys to be paid to him as aforesaid in the first place retain his commission and all costs, charges, and expenses lawfully due to him, and in the next place pay to Babu C. C. Bose, Attorney for the said insolvents, his costs incurred in this matter (to be taxed by the taxing officer of this Court), and then deliver over to Jamarain Poddar, Rai Hariram, Goenka Bahadur, Chaitram Chowdry, and Shew Bux Jhajhooria, the trustees appointed by the deed of composition, upon their receipt the assets in his hands, together with all other the estate and effects, goods, books and papers now remaining in the hands of the said assignee belonging to the estate of the said insolvents.

C. C. Bose, Attorney. (725—1)

In the matter of TOOLARAM BOTHRA, an insolvent.

On Tuesday, the 2nd day of September instant, it was ordered that, subject to payment to Albert Birmingham Miller, Esq., the Official Assignee of this Court and the assignee of the estate and effects of the said insolvent, of his usual commission and all costs, charges, and expenses lawfully due to him and the costs of the attorneys of the insolvent incurred in this matter, the petition filed by the said insolvent on the 10th June last seeking for relief under the provisions of the said Act be and the same is hereby withdrawn and the vesting order made thereon be and the same is hereby discharged, provided always that all acts or things done by the said assignee or other person or persons acting under his authority prior to this order shall be good and valid and shall not be annulled or in any wise affected thereby, and it was further ordered that the said assignee do out of the moneys to be paid to him as aforesaid in the first place retain his commission and all costs, charges, and expenses lawfully due to him, and in the next place pay to Messrs Fox and Mandal, attorneys for the said insolvent, their costs incurred in this matter (to be taxed by the taxing officer of this Court), and then deliver over to Hanootmull Dooger, mentioned in the deed of composition, upon his receipt the assets in his hands, together with all other the estate and effects, goods, books, and papers now remaining in the hands of the said assignee belonging to the estate of the said insolvent.

Fox and Mandal, Attorneys. (726—1)

In the matter of BRIDHI CHAND, residing at Durmapati, Burra Bazar, in the town of Calcutta, lately carried on business in piece-goods under the name, style, and firm of Jethmul Balchand at No. 27, Pogyaputty, Burra Bazar, in Calcutta aforesaid, now out of employ, an insolvent.

Notice that the petition of the said insolvent seeking the benefit of the Act XI Vic., Chap. XXI, was filed in the office of the Chief Clerk on Thursday, the 28th day of August last, and by an order of the same date the estate and effects of the said insolvent were vested in the Official Assignee.

R. C. Basu, Attorney. (727—1)

In the matter of THOMAS ALEXANDER BLAKE, at present residing at No. 34, Park Street, in the town of Calcutta, an Examiner of Accounts, in Government employ, a British subject, an insolvent.

Notice that the petition of the said insolvent seeking the benefit of the Act XI Vic., Chap. XXI, was filed in the office of the Chief Clerk on Thursday, the 11th day of September instant, and by an order of the same date the estate and effects of the said insolvent were vested in the Official Assignee.

Leslie and Hinds, Attorneys. (728—1)

In the matter of JAMES WRIGHT LEWIS of No. 16, Watkins Lane, Howrah, in the suburb of Calcutta, a carpenter attached to the Howrah Bridge of the Port Commissioners, a British-born subject, an insolvent.

Notice that the petition of the said insolvent seeking the benefit of the Act XI Vic., Chap. XXI, was filed in the office of the Chief Clerk on Monday, the 15th day of September instant, and by an order of the same date the estate and effects of the said insolvent were vested in the Official Assignee.

Insolvent in person. (729—1)

In the matter of BOIKANTHA NAUTH CHATTERJEE, lately residing at No. 133, Amherst Street in Calcutta, and lately carrying on business in teakwood at No. 136, Amherst Street in Calcutta, under the name and style of Dibakar Chakraverti & Co., now a prisoner in the Presidency Jail, Calcutta, an insolvent.

Notice that the petition of the said insolvent seeking the benefit of the Act XI Vic., Chap. XXI, was filed in the office of the Chief Clerk on Tuesday, the 16th day of September instant, and by an order of the same date the estate and effects of the said insolvent were vested in the Official Assignee.

R. K. Bysack, Attorney. (730—1)

In the matter of STANLEY JAMES STEVENSON, residing at No. 25, Royd Street, in the town of Calcutta, an assistant in the employ of the Phœnix Company, an insolvent.

Notice that the petition of the said insolvent seeking the benefit of the Act XI Vic., Chap. XXI, was filed in the office of the Chief Clerk on Monday, the 15th day of September instant, and by an order of the same date the estate and effects of the said insolvent were vested in the Official Assignee.

O. Camell, Attorney. (731—1)

In the matter of BHUTENDRA NATH DEY, residing at No. 6, Uckur Dutt's Lane, in the town of Calcutta, a clerk in the service of the Imperial Library, an insolvent.

Notice that the petition of the said insolvent seeking the benefit of the Act XI Vic., Chap. XXI, was filed in the office of the Chief Clerk on Monday, the 15th day of September instant, and by an order of the same date the estate and effects of the said insolvent were vested in the Official Assignee.

Monmotho Nath Sen, Attorney. (732—1)

In the matter of GEORGE MANSFIELD PHILIPS, late an assistant in the mercantile firm of Messrs. Octavius Steel and Company in Calcutta and residing at No. 8, Wellesley Place in Calcutta aforesaid, but at present without any occupation, an insolvent.

Notice that the petition of the said insolvent seeking the benefit of the Act XI Vic., Chap. XXI, was filed in the office of the Chief Clerk on Saturday, the 13th day of September instant, and by an order of the same date the estate and effects of the said insolvent were vested in the Official Assignee.

C. A. Smith, Attorney. (733—1)

In the matter of ELVINA FLORENCE OTTO, widow of Charles Otto, residing at No. 4, Wellesley 1st Lane, in the town of Calcutta, a pensioner, an insolvent.

Notice that the petition of the said insolvent seeking the benefit of the Act XI Vic., Chap. XXI, was filed in the office of the Chief Clerk on Saturday, the 13th day of September instant, and by an order of the same date the estate and effects of the said insolvent were vested in the Official Assignee.

H. C. Ghose, Attorney. (734—1)

In the matter of SUTTYA LAL SHAW, residing at No. 90, Manicktollah Street, in the town of Calcutta, lately carrying on business at No. 102, Radha Bazar Street, as wine merchant and order-supplier, at present no occupation, an insolvent.

Notice that the petition of the said insolvent seeking the benefit of the Act XI Vic., Chap. XXI, was filed in the office of the Chief Clerk on Friday, the 22nd day of August last, and by an order of the same date the estate and effects of the said insolvent were vested in the Official Assignee.

Punnalall De, Attorney. (735—1)

In the matter of HANOOTHRAM LOHRA, lately residing at No. 40, Banstolla Street, in the town of Calcutta, and lately carrying on business in Calcutta aforesaid as a broker, but now a prisoner in the Civil Side of the Presidency Jail, an insolvent.

Notice that the petition of the said insolvent seeking the benefit of the Act XI Vic., Chap. XXI, was filed in the office of the Chief Clerk on Monday, the 1st day of September instant, and by an order of the same date the estate and effects of the said insolvent were vested in the Official Assignee.

K. M. Rakshit, Attorney. (736—1)

In the matter of SADASOOK SEPONEY, residing at No. 41, Armenian Street, in the town of Calcutta, lately carrying on business as cloth merchant in copartnership with Asatmull and Imatmull, since deceased, under the name and style of Luchman Das Asatmull at No. 1, Armenian Street, in the town of Calcutta, and also under the name, style and firm of Asatmull Sadasook at Khulna, in the district of Khulna, and at present employed as an assistant of the firm of Ram Kissen Das, Giridhari Laul, at No. 55, Sootaputty, in the town of Calcutta, an insolvent.

Notice that the petition of the said insolvent seeking the benefit of the Act XI Vic, Chap. XXI, was filed in the office of the Chief Clerk on Tuesday, the 2nd day of September instant, and by an order of the same date the estate and effects of the said insolvent were vested in the Official Assignee.

A. K. Mitra, Attorney. (737—1)

In the matter of JOHN FORDHAM, horse-trainer, residing at No. 210, Lansdowne Road, Ballygunge, in the suburbs of the town of Calcutta, and in the employ of Mr. J. C. Gaulstaun, a European British subject, an insolvent.

Notice that the petition of the said insolvent seeking the benefit of the Act XI Vic., Chap. XXI, was filed in the office of the Chief Clerk on Saturday, the 30th day of August last, and by an order of the same date the estate and effects of the said insolvent were vested im the Official Assignee.

Insolvent in person. (738—1)

In the matter of NOBIN CHUNDER DAW, ABINASH CHUNDER DAW, and JOGESH CHUNDER DAW, all residing at No. 53, Buloram Dey's Street, in the town of Calcutta, lately carrying on business together in copartnership as dealers in glassware, perfumery, medicines, enamelled articles, spices, and other miscellaneous goods at Nos. 76 and 77, Old China Bazar Street, in the town of Calcutta, under the names, styles and firms of Messrs. Nobin Chunder Daw and Sons and Messrs. Abinash Chunder Daw and brothers, and also at No. 74, Old China Bazar Street, in the town of Calcutta, under the name, style and firm of Messrs. Jogesh Chunder Daw and Company, at present no occupation, insolvents.

Notice that the petition of the said insolvents seeking the benefit of the Act XI Vic., Chap. XXI, was filed in the office of the Chief Clerk on Tuesday, the 2nd day of September instant, and by an order of the same date the estate and effects of the said insolvents were vested in the Official Assignee.

Pannalall De, Attorney. (739—1)

In the matter of ANGELICA MAGDALENE HENWOOD *alias* PHILIPPE of No. 12, British Indian Street, in the town of Calcutta, widow of the late GEORGE HENWOOD, deceased, an insolvent.

Notice that the petition of the said insolvent seeking the benefit of the Act XI Vic., Chap. XXI, was filed in the office of the Chief Clerk on Thursday, the 28th day of August last, and by an order of the same date the estate and effects of the said insolvent were vested in the Official Assignee.

Insolvent in person. (740—1)

In the matter of JHANMULL DHUDHURIA, lately residing at 100, Khangraputty, in the town of Calcutta, at present a prisoner in the Civil Side of the Presidency Jail, an insolvent.

Notice that the petition of the said insolvent seeking the benefit of the Act XI Vic., Chap. XXI, was filed in the office of the Chief Clerk on Saturday, the 30th day of August last, and by an order of the same date the estate and effects of the said insolvent were vested in the Official Assignee.

Fox and Mandal, Attorneys. (741—1)

In the matter of BISSESSER LAL AGARWALLA, residing at No. 64, Banstolla Street, Calcutta, a broker, an insolvent.

Notice that the petition of the said insolvent seeking the benefit of the Act XI Vic., Chap. XXI, was filed in the office of the Chief Clerk on Saturday, the 30th day of August last, and by an order of the same date the estate and effects of the said insolvent were vested in the Official Assignee.

R. C. Mitter, Attorney. (742—1)

In the matter of SATYA CHARAN BANNERJEE, residing at No. 35-1, Baranassey Ghose's Street, in the town of Calcutta, who lately carried on business as coal and coke-dealer and general order supplier at No 35-1, Baranassey Ghose's Street, in Calcutta aforesaid, but at present without any employment, an insolvent.

Notice that the petition of the said insolvent seeking the benefit of the Act XI Vic., Chap. XXI, was filed in the office of the Chief Clerk on Friday, the 19th day of September instant, and by an order of the same date the estate and effects of the said insolvent were vested in the Official Assignee.

S. C. Ghose, Attorney. (743—1)

Chief Clerk's Office, the 22nd day of September 1902.

In the matter of CHODI SETTY VENKATARATNUM and CHODI SETTY NAGAYYA, insolvents.

Notice that an application for an *ad-interim* protection order has been made by the said insolvents on the 22nd instant, and that such application will be heard and disposed of by the Acting Commissioner of the Insolvent Court on Thursday, the 2nd day of October next, at the hour of half-past ten o'clock in the forenoon.

☞ Any creditor of the said insolvents desirous of opposing such application must appear before the said Court at the time and place aforesaid.

Fox and Mandal, Attorneys. (754—1)

In the matter of Debendra Nath Nandy, an insolvent.

Notice that an application for an *ad-interim* protection order has been this day made by the said insolvent, and that such application will be heard and disposed of by the Acting Commissioner of the Insolvent Court on Thursday the 2nd day of October next, at the hour of half-past ten o'clock in the forenoon.

☞ Any creditor of the said insolvent desirous of opposing such application must appear before the said Court at the time and place aforesaid.

Kali Mohun Rukshit, Attorney.

Chief Clerk's Office, the 23rd day of September 1902. (755—1)

In the Court of the District Judge of Hooghly.

In the matter of Biharilal Pal, an insolvent.

BIHARILAL PAL, of Nabogram, thana Chanditala, district Hooghly, was on the 29th August 1902 declared an insolvent and discharged on the 19th September instant under section 351, Civil Procedure Code.

G. K. DEB, District Judge.

Hooghly District Judge's Court, the 20th September 1902. (688—1—1188)

In the Court of the District Judge of Bhagalpur.

INSOLVENCY CASE No. 7 OF 1902.

Gorakh Mian and Madho Mian, of mauza Lachmipur Ekdara, pargana Colgong, petitioners.

NOTICE

IS hereby given that Gorakh Mian and Madho Mian, the abovenamed petitioners, were, on the 25th day of August 1902, declared insolvents by this Court, and the Nazir of this Court has been appointed Receiver in the case.

MATI LAL HALDAR, *for* Offg. District Judge.

Bhagalpur District Judge's Court, the 15th September 1902. (672—1—1178)

In the Court of the District Judge of Hooghly.

In the matter of Nibaran Chandra Pal, an insolvent.

NIBARAN CHANDRA PAL, of Bali, thana Howrah, zilla Hooghly, was on the 10th December 1901 declared an insolvent and discharged under section 351, Civil Procedure Code, on the 15th September 1902.

G. K. DEB, District Judge.

Hooghly District Judge's Court, the 16th September 1902. (676—1—1177)

CALCUTTA POST OFFICE NOTICE.

Mails for—	Date and hour of closing at the General Post Office, Calcutta.		Route by which despatched.
	1902.	P.M.	
United Kingdom, Aden, Egypt, Europe, America, West Africa *vid* United Kingdom and East Africa *vid* Aden (and also South Africa, if superscribed on the cover *vid* United Kingdom or Aden).	25th Sept.	At 6-30	Per P. & O. steamer from Bombay.
Parcels and money-orders for the United Kingdom and other Foreign places.	24th ,,	Parcels P.M. At 5 M.-O. P.M. At 4	Ditto ditto.
* Australasian Colonies ...	29th ,,	,, 7-30	*Vid* Tuticorin and Colombo.*
† Straits Settlements (also China and Japan, if the steamer's name is superscribed on the cover).	29th ,,	,, 8-30	Per steamer *A. Apcar.*
Burma	25th ,,	,, 7-30	Per B. I. S. N. Co.'s steamer.
Burma, Penang and Singapore.	27th ,,	,, 7-30	Ditto ditto
Akyab, Kyaukpyu and Sandoway.	27th ,,	,, 7-30	Ditto ditto.
Burma, Tavoy and Mergui ...	29th ,,	,, 7-30	Ditto ditto.
Singapore, Fremantle, Melbourne and Sydney.	24th ,,	,, 8-30	Per steamer *Eurylus.*
Port Blair	27th ,,	,, 7-30	*Vid* Madras.

* Although the date entered in column 2 is, as far as can be calculated, the latest safe date of posting for the next Mail steamer, full allowance being made for the steamer being in advance of her published timing, Mails for the places mentioned in column 1 are despatched daily to Colombo, so that they may proceed by any steamer that has been unusually accelerated or retarded, or by any special opportunity that may be afforded by a steamer not belonging to one of the regular lines.

† Correspondence for China and Japan is despatched daily to Colombo, so that they may proceed by the first steamer available.

1. The letter-box for Inland articles will be cleared for the forenoon Mails at the following hours:—
   For Goalundo, Arakan and Chittagong, at 5-30 A.M.
   For Midnapore and Orissa districts, at 8-30 A.M.
   For the Eastern districts, as far as Dacca and Mymensingh, at 6-30 A.M.
   For Khulna and Jessore districts, at 7-30 A.M.
   For Bombay, Central Provinces and Midnapore, *vid* Bengal-Nagpur Railway, at 10-45 A.M., and with a late fee of ½ anna up to 11-35 A.M.

2. The letter-box will be cleared for the evening Mails at the following hours, viz.—
   For the East Indian Railway Loop Mail, at 2-30 P.M., and with a late fee of ½ anna up to 2-55 P.M.
   For the Northern Bengal, Darjeeling and Assam Mails, at 3-25 P.M., and with a late fee of ½ anna up to 3-50 P.M.
   For the Bombay Mail, *vid* Jubbulpore, at 6 P.M., and with a late fee of ½ anna up to 6-30 P.M.
   For the Punjab Mail, at 7-30 P.M.
   For Midnapore, Orissa and Madras Presidency, at 7-30 P.M. } and with a late fee of ½ anna up to 8 P.M. and with a late fee of 1 anna up to 8-45 P.M.
   For the Khulna Mail, at 7-30 P.M.
   For the Eastern Bengal Mail, at 7-30 P.M.

3. Late registered letters will be received between the following hours:—
   For the Bombay Mail, *vid* Jubbulpore, from 5 P.M. to 6-15 P.M.
   For the Punjab Mail, from 6 P.M. to 7 P.M.
   For the Eastern Bengal Mail, from 6 P.M. to 7 P.M.
   For the Khulna Mail, from 6 P.M. to 7 P.M.
   For Midnapore, Orissa and the Madras Presidency, from 6 P.M. to 7 P.M.

NOTE.—The late fee on each registered letter will be 2 annas, which must be prepaid in stamps on the letter.

4. Articles for Burma and for Port Blair by sea are received without late fee up to 7-30 P.M., and with a late fee of ½ anna up to 8 P.M.

5. On the latest safe day of despatch of Mails for the Australasian Colonies or any other Foreign Countries, *vid* Madras or Tuticorin, the letter-box for Foreign articles will be cleared for the last time at 7-30 P.M., and late letters and papers fully prepaid will be received up to 8-45 P.M.

6. On the day of despatch of the Mail for Europe (Thursday), the letter-box for Foreign articles will be cleared for the last time, for articles, without the late fee, at 6-30 P.M., and late letters and papers fully prepaid will be received up to 6-45 P.M. Late registered articles will be received from 5 to 6 P.M. On other days the letter-box for Foreign articles will be cleared for the last time, without the late fee, at 6 P.M., and late letters and papers will be received up to 6-30 P.M. for despatch by any Foreign Mails, *vid* Bombay, the same night and up to 8-30 P.M., late letters and papers up to 9 P.M., for any Foreign Mails despatched by sea. Foreign Mails for despatch *vid* Madras or Tuticorin are received up to 7-30 P.M., and with a late fee up to 8-45 P.M. The late fee for Foreign articles is 4 annas, which must be prepaid in stamps affixed to the articles.

JOHN OWENS,
Presidency Postmaster.

CALCUTTA G. P. O.,
The 23rd September 1902.

Nadia Rivers.

Report showing the least depths of water for the week ending Friday, the 19th September 1902.

Name of River.	Reach of River.	Least depth of water soundings. Ft.	in.	REMARKS.
Bhagirathi.	Entrance from Ganges ...	20	0	
	Thence to Geriah ...	17	0	Momintola.
	From Geriah to Jungipur ...	18	9	Khiderpur.
	,, Jungipur to Berhampore	15	0	Saalpur.
	,, Berhampore to Katwa...	15	0	Majhampur.
	,, Katwa to Nadia ...	24	0	Dafarpota.
Bhairab-Jalangi.	Entrance from Ganges ...	23	0	
	Thence to Akriganj ...	20	0	Chakharpara.
	Akriganj to junction of the Bhairab and Jalangi	21	0	Harharia.
	Thence to Patkabari	23	0	Lalnagar.
	Patkabari to Nadia	19	0	Taranagar.
Matha-bhanga.	Entrance from Ganges ...	15	3	
	Thence to Dewanganj ...	16	0	Jamalpur.
	From Dewanganj to Shikarpur	15	6	Megna.
	,, Shikarpur to Boalia ...	17	6	Mallpara.
	,, Boalia to Chuadanga ...	19	3	Boalmari.
	,, Chuadanga to Kissenganj and Hanskhali ...	16	6	Shampur.

Gauge Readings.

	Locality.	Date.	Hour.	Height above zero.	Height above mean sea-level.	REMARKS.
			A.M.	Ft.	Ft.	
Ganges ...	Sahibganj ..	20-9-1902	6	22·00	90·00	Rise.
	Rampur Boalia	20-9-1902	Noon	21·39	63·39	,,
	Entrance of Bhagirathi Geria ...	21-9-1902	A.M. 7	...	72·20	,,
	Entrance of Bhairab-Jalangi Akriganj ...	21-9-1902	A.M. 7	...	61·45	,,
	Entrance of Mathabhanga ...	19-9-1902	...	20·92	...	,,
Bhagirathi.	Jangipur ...	21-9-1902	...	...	69·70	,,
	Berhampore ...	22-9-1902	A.M. 10	25·02	59·67	,,
	Katwa ...	19-9-1902	P.M. 6	30·00	45·16	Full.
Jalangi ...	Krishnagar ...	19-9-1902	Noon	23·58	...	Rise.
	Sarupganj ...	20-9-1902	Noon	...	27·00	,,
Mathabhanga.	Hanskhali ,,	20-9-1902	...	19·10	...	,,

K. S. CHATTERJEE, *Head Clerk,*
for *Exe. Engr., Nadia Rivers Division.*

Berhampore, the 22nd September 1902.

Parts I, II, and III of a Descriptive Catalogue of the Sanskrit Manuscripts in the Library of the Calcutta Sanskrit College, prepared by Pandit Hrishikesa Sastri and Babu Siva Chandra Gui, M.A., B.L., of that College are offered to the public for sale. The Catalogue is to be completed in 28 parts, the price of each part being 12 annas a copy, exclusive of postage. Copies can be obtained, from the Principal of the Sanskrit College, Calcutta.

GOVERNMENT PUBLICATIONS FOR SALE

At the Bengal Secretariat Book Depôt, Writers' Buildings, Calcutta, and by the following Agents :—

AGENTS IN INDIA.

Messrs. Thacker, Spink & Co., Calcutta and Simla.
Messrs. Newman & Co., Calcutta.
Messrs. Higginbotham & Co., Madras.
Messrs. Thacker & Co., Ld., Bombay.
Messrs. A. J. Combridge & Co., Bombay.
Mr. E. Seymour Hale, 53 Esplanade Road, Fort, Bombay, and Calcutta.
The Superintendent, American Baptist Mission Press, Rangoon.
Messrs. S. K. Lahiri & Co., Printers and Booksellers, College Street, Calcutta.
Rai Sahib M. Gulab Singh & Sons, Proprietors of the Mufid-i-am Press, Lahore, Punjab.
Messrs. V. Kalyanarama Iyer & Co., Booksellers, &c., Madras.
Messrs. D. B. Taraporevala Sons & Co., Booksellers, Bombay.

AGENTS IN ENGLAND.

Mr. E. A. Arnold, 37 Bedford Street, Strand, London.
Messrs. Constable & Co., 2 Whitehall Gardens, London.
Messrs. Sampson Low, Marston & Co., St. Dunstan's House, Fetter Lane, London.
Messrs. Luzac & Co., 46 Great Russell Street, London.
Messrs. Kegan Paul, Trench, Trübner & Co., Charing Cross Road, London.
Mr. B. Alfred Quaritch, 15 Piccadilly, London.
Messrs. P. S. King & Son, 2 & 4 Great Smith Street, Westminister, London.
Messrs. H. S. King & Co., 65 Cornhill, London.
Messrs. Williams and Norgate, Oxford.
Messrs. Deighton Bell & Co., Cambridge.

AGENTS ON THE CONTINENT.

Messrs. R. Friedländer & Sohn, Berlin, N. W. Carlstrasse, 11.
Mr. Otto Harrassowitz, Leipzig.
Mr. Karl Hiersemann, Leipzig.
Mr. Ernest Leroux, 28 Rue Bonaparte, Paris.
Mr. Martinus Nijhoff, The Hague.

NOTICE.—Books required for private use can be purchased. Applications should be accompanied by a remittance in each case.

All remittances on account of subscriptions to, or prices of, Gazettes, Indian Law Reports or other Government publications available for sale at the Bengal Secretariat Book Depôt, or for cost of advertisements published in the Gazettes should, in future, be made payable to the "Treasurer, Bengal Secretariat, Calcutta." Advices of such remittances, if separately sent, should be addressed to the "Accountant, Bengal Secretariat." All advertisements intended for publication in the *Calcutta* or *Bengali Gazette* should be sent direct to the Superintendent, Government Printing, Bengal.

Books required for the Public Service should be obtained through the Heads of Departments.

☞ *The amounts within parentheses are for packing and postage.*

NEW PUBLICATIONS ISSUED DURING THE CURRENT QUARTER.

APPOINTMENT DEPARTMENT.

Quarterly Civil List of Bengal, corrected up to 1st July 1902. Super-Royal 8vo. Paper cover. Rs. 3. (4*a*.)

GENERAL DEPARTMENT.

Report of Emigration from the Port of Calcutta to British and Foreign Colonies, 1901. By the Protector of Emigrants, Calcutta. F'cap. Paper cover. 12*a*. (1*a*.)
Civil Engineering College, Sibpur, Calendar for 1902. Royal 8vo. Paper cover. 12*a*. (2*a*.)
Annual Report on Inland Emigration for the year 1901. F'cap. Paper cover. 8*a*. (1*a*.)
Annual Report on the Reformatory Schools at Alipore and Hazaribagh for the year 1901. F'cap. Paper cover. 4*a* (1*a*.)

JUDICIAL DEPARTMENT.

Annual Report on the Police Administration of the Town of Calcutta and its Suburbs for the year 1901. F'cap. Paper cover. Re. 1. (1*a*.)

LEGISLATIVE DEPARTMENT.

The Bengal Vaccination Act, 1880 (Bengal Act V of 1880), as modified up to 1st June 1902. Royal 8vo. Paper cover. Price 4*a*. (1*a*.)
The Salt Act, 1864 (Bengal Act VII of 1864), as modified up to 1st July 1902, with an appendix showing the extent to which the Indian Salt Act, 1882, is in force in Bengal. Royal 8vo. Paper cover. 3*a*. (1*a*.)

MUNICIPAL DEPARTMENT.

Triennial Report on the working of the Charitable Dispensaries under the Government of Bengal and the Calcutta Medical Institutions for the years 1899, 1900 and 1901. F'cap. Paper cover. Rs. 5. (3*a*.)
Thirty-fourth Annual Report of the Sanitary Commissioner for Bengal for the year 1901. F'cap. Board. Paper cover. Re. 1-12, (3*a*.)
Fifth Triennial Report of Vaccination in Bengal during the years 1899-1900, 1900-1901, and 1901-1902. F'cap. Paper cover. Re. 1. (1*a*.)

POLITICAL DEPARTMENT.

Administration Report on the Jails of Bengal for the year 1901. F'cap. Board. Paper cover. Rs. 3. (3*a*.)

PUBLIC WORKS DEPARTMENT.

Electric Traction.—Six lectures delivered in March 1902 at the Civil Engineering College, Sibpur, by J. W. Meares, Esq., Electrical Engineer to the Government of Bengal. Royal, 8vo. Full cloth. Re. 1-8. (2*a.*)

Classified List and Distribution Return of Establishment of the Public Works Department, Bengal, corrected up to 30th June 1902. Super-Royal 8vo. Paper cover. 4*a.* (1*a.*)

A Manual for the guidance of the staff of the Revenue Division of the Sone Canals. By H. TOOGOOD, Esq., Superintending Engineer, Sone Circle. Royal 8vo. Board Paper cover. Re. 1. (2*a.*)

Report on the working of the Calcutta Shipping Office and of the Shipping Offices at the several Outports for the year 1901-1902. F'cap. Paper cover. As. 6. (1*a.*)

REVENUE DEPARTMENT.

Season and Crop Report of Bengal for the year 1901-1902. F'cap. Paper cover. 8*a.* (1*a.*)

The Sale Law Manual, a Manual of the Revenue and the Patni Sale Laws with Notes and the rules, &c., under them. Royal 8vo. Board. Paper cover. Re. 1-4. (3*a.*)

Price-list of staple food-crops in the local areas of Bengal, for the period from 1st January to 31st March 1901. F'cap. Board. Paper cover. Re. 1. (2*a.*)

Rules for the keeping and inspection of accounts of collections in Government and Wards' Estates. Published under the authority of the Board of Revenue, L. P. Royal 8vo. Board. Paper cover. As. 8. (1*a.*)

The Government Estates' Manual, 1902. Royal 8vo. Board. Paper cover. Re. 1. (8*a.*)

The Register and Return Manual, 1902. A reprint of Chapters IX and X of the Board's Rules, 1896, as corrected up to January 1902. Royal 8vo. Board. Paper cover. As. 8. (2*a.*)

STATISTICAL DEPARTMENT.

The Trade of Bengal with Nepal, Thibet, Sikkim and Bhutan for the year ending March 1902. Compiled under the supervision of the Director-General of Statistics. F'cap. Board Paper cover. Re. 1-2. (2*a.*)

PUBLICATIONS ISSUED BETWEEN THE 1ST JANUARY AND THE 30TH JUNE 1902.

APPOINTMENT DEPARTMENT.

Quarterly Civil List of Bengal corrected up to 1st April 1902. Super-royal 8vo. Paper cover. Price Rs. 3. (4*a.*)

FINANCIAL DEPARTMENT.

The Stamp Manual, 1902. A Manual for the guidance of officers in the administration of the Stamp Department. Royal 8vo. Board. Paper cover. Price Re. 1-8. (6*a.*)

Annual Report on the consumption of Stationery in Bengal during 1900-1901. F'cap. Paper cover. Rs. 3. (2*a.*)

GENERAL DEPARTMENT.

List of Officers in the Subordinate Educational Service, Bengal, corrected up to 1st April 1902. F'cap. Paper cover. 8*a.* (1*a.*)

JUDICIAL DEPARTMENT.

Question Papers set at the Pleadership and Muktearship Examinations for the year 1902. Royal 8vo. Paper cover. Price 2*a.* (1*a.*)

Question Papers set at the Examination of candidates for appointment as Sub-Inspectors of Police. July and November 1901. Royal 8vo. Paper cover. Price 5*a.* (1*a.*)

Question Papers set at the Examination of candidates for recruiting the staff of Superior Police Officers in Bengal and Assam, held in November 1901. Royal 8vo. Paper cover. Price 8*a.* (1*a.*)

LEGISLATIVE DEPARTMENT.

The Court of Wards' Act, 1879 (Bengal Act IX of 1879), in Hindi, as modified up to the 1st July 1901. Royal 8vo. Paper cover. Price 6*a* (1*a.*)

The Calcutta Port Act, 1890 (Bengal Act III of 1890), as modified up to 1st April 1902. Royal 8vo. Paper cover. Price 10*a.* (1*a.*)

MUNICIPAL DEPARTMENT.

Annual Returns of the Lunatic Asylums in Bengal with brief notes for the year 1901. Compiled by the Inspector-General of Civil Hospitals. F'cap. Paper cover. Price Re. 1. (2*a.*)

Account Rules under the Local Self-Government Act, Part VIII. F'cap. Paper cover. Price 8*a.* (.)

Annual Report of the Chemical Examiner's Department, Bengal, 1901. F'cap. Paper cover. Price 8*a.* (2*a.*)

PUBLIC WORKS DEPARTMENT.

Distribution Return of Officers and Subordinates employed on Local Works in Bengal, corrected up to 31st December 1901. Super-royal 8vo. Paper cover. Price 2*a.* (1*a.*)

Embankment and Drainage Report of the Government of Bengal, Irrigation Department, for the year 1900-1901. F'cap. Boards Paper cover. Price Rs. 2. (3*a.*)

Classified List and Distribution Return of Establishment corrected up to 31st March 1902. Super-royal 8vo. Paper cover. Price 4*a.* (1*a.*)

Dacca Electric Lighting License, 1902. F'cap. Paper cover. Price 14*a.* (1*a.*)

Notes on the construction of Railways in India (for students) with 5 charts. F'cap. Paper cover. Price Re. 1. (1*a.*)

REVENUE DEPARTMENT.

Annual Report of the Burdwan Experimental Farm for the year 1900-1901. F'cap. Paper cover. Price 3*a.* (1*a.*)

Annual Report on the Survey Operations in Bengal during the year 1900-1901 (from 1st October 1900 to 30th September 1901). F'cap. Paper cover. Price Re. 1-8. (2*a*.)

Annual Report of the Director of the Department of Land Records, Bengal, on Settlements, for the year ending 30th September 1901. F'cap. Paper cover. Price 8*a*. (1*a*.)

The Practice and Procedure Manual, published under the authority of the Board of Revenue. Royal 8vo. Board. Paper cover. Price 12*a*. (8*a*).

OLDER PUBLICATIONS.

A General Catalogue of all Government Publications (corrected up to 31st December, 1901) may be obtained *gratis* on application to the Officer in charge, Bengal Secretariat Book Depôt.

Publications for sale at the office of the Chief Inspector of Explosives with the Government of India.

Rules for the manufacture, possession and sale of explosives issued by each of the Local Governments and Administrations. Price 12*a*.

Rules for the transport and importation of explosives issued by the Government of India. Price 12*a*.

Rules for the transport and importation of explosives at the Port of Calcutta. Price 4*a*.

GOVERNMENT PUBLICATIONS FOR SALE

BY THE SUPERINTENDENT OF GOVERNMENT PRINTING, INDIA, 8 HASTINGS STREET, CALCUTTA.

[A General Catalogue of all Government Publications may be obtained gratis from the Government Central Press, Calcutta.]

All books published by the Superintendent of Government Printing, India, can be purchased, either directly or through the following or any other booksellers:—

AGENTS IN INDIA.

Messrs. Thacker, Spink & Co., Calcutta and Simla.
Messrs. Newman & Co., Calcutta.
Messrs. Higginbotham & Co., Madras.
Messrs. Thacker & Co., Ld., Bombay.
Messrs. A. J. Combridge & Co, Bombay.
Messrs. V. Kalyanarama Iyer & Co., Madras.
Messrs. D. B. Taraporevala, Sons & Co., Bombay.
Superintendent, American Baptist Mission Press, Rangoon.
Rai Sahib M. Gulab Singh and Sons, Mufid-I-Am Press, Lahore.
Manager, Educational Book Depôts, Nagpur and Jubbulpore.*
Manager of the Imperial Book Depôt, 63 Chandni Chauk Street, Delhi.*
Manager, "East Coast News," Vizagapatam.*
Manager, "The Agra Medical Hall and Co-operative Association, Limited" (Successors to A. John & Co.), Agra.*
Mr. T. K. Sectharama Aiyar, Kumbakonam.*
Lala Debi Prasad, Vakil and Manager of Law Press, Cawnpore.*

AGENTS IN EUROPE.

Mr. E. A. Arnold, 37 Bedford Street, Strand, London.
Messrs. Constable & Co., 2 Whitehall Gardens, London.
Messrs. Sampson Low, Marston & Co., St. Dunstan's House, Fetter Lane, London.
Messrs. Luzac & Co., 46 Great Russel Street, London.
Messrs. Kegan Paul, Trench, Trübner & Co., Charing Cross Road, London.
Mr. B. Alfred Quaritch, 15 Piccadilly, London.
Messrs. P. S. King and Son, 2 & 4 Great Smith Street, Westminster.
Messrs. H. S. King & Co., 65 Cornhill, London, are also Agents for the sale of the Indian Army List.
Mr. Otto Harrassowitz, Mr. Karl Hiersemann } Leipzig.
Messrs. R. Friedlander & Sohn, Berlin, N. W. Carlstrasse, 11.
Mr. Ernest Leroux, 28 Rue Bonaparte, Paris.
Mr. Martinus Nijhoff, the Hague, Holland.
Messrs. Williams and Norgate, Oxford.
Messrs. Deighton Bell & Co., Cambridge.

* Agents for sale of the Legislative Department publications.

NOTICE.—Books and Acts required for private use only can be purchased. Applications should be accompanied by a remittance, unless it is wished that the books should be sent by value-payable post, in which case, besides the ordinary postage, an additional charge is made for registration and commission.

Books and Acts required for the public service should be obtained through Local Governments to whom the applicant is subordinate.

Applications for Government publications which are no longer in print should be made to the Agents of the particular Government under whose orders they were originally issued.

The amounts within parentheses are for packing and postage.

List of New Books published during the Current Quarter.

LEGISLATIVE DEPARTMENT.

List of General rules and orders under Statutes and General Acts in force in British India Corrected to 31st March 1902. Royal 8vo. Stitched. Re. 1 8*a*. or 2*s*. 3*d*. (3*a*.)
Madras Code. Third Edition, in two Volumes. 1901. Super-Royal 8vo. Cloth. Rs. 6 or 9*s*. (8*a*.) each.
The Indian Lunatic Asylums Act, 1858 (Act XXXVI of 1858), as modified up to 31st May, 1902. 5*a*. 6*p*. or 6*d*. (1*a*.)
The Agriculturists Loans Act, 1884 (Act XII of 1884), as modified up to 15th December, 1896, and with foot-notes brought down to the 1st June, 1902. 2*a*. or 3*d*. (1*a*.)
The Northern Indian Ferries Act, 1878 (Act XVII of 1878), as modified up to 1st June, 1902. 6*a*. or 7*d*. (1*a*.)
The Indian Tariff Act, 1894 (Act VIII of 1894), as modified up to 30th June, 1902. 8*a*. or 9*d*. (1*a*.)

HOME DEPARTMENT.

Report on the Nature of Kala-Azar, by Major Ronald Ross, I.M.S. F'cap. Board Rs. 2 or 3*s* (3*a*.)
Report of the Indian Universities Commission will shortly be available on sale at the Government Central Press, Calcutta.
Scientific Memoirs by Officers of the Medical and Sanitary Departments of the Government of India. Standardisation of Calmette's Anti-Venomous Serum with Pure Cobra Venom. The Deterioration of this Serum through keeping in India by Captain G. Lamb, M.B., I.M.S., and Wm. Hanna, Esq., M.B., etc. New series, No. I. Super Royal 4to. Paper cover. 3*a*. or 4*d*. (1*a*.)
Assam Census Report, 1901, Parts I and II. Rs. 2 or 2*s*. 8*d*. each.

FINANCE AND COMMERCE DEPARTMENT.

List of Officers in the Finance and Commerce Department. Corrected to 1st May 1902. Royal 8vo. Paper cover. 4*a*. or 5*d*. (1*a*.)
Statistics compiled from the Finance and Revenue Accounts of the Government of India. Receipts and Disbursements of Home and Indian Accounts from 1st April 1892 to 31st March 1900. F'cap. Board. Rs. 2 or 3*s*. (7*a*.)
History of Services of Officers holding appointments in offices under the control of the Government of India, Finance and Commerce Department. Corrected to 1st July, 1902. F'cap. Board. As. 12 or 1*s*. (3*a*.)

STATISTICAL DEPARTMENT.

Review of the Trade of India in 1901-1902. F'cap. Paper cover. 8*a*. or 9*d*. (2*a*.)
Statistics of Cotton Spinning and Weaving in the Indian Mills in April 1902, and in the corresponding month of 1900 and 1901. Royal 8vo. Stitched. 2*a*. or 2*d*. (1*a*.)
Accounts of the External Land Trade of British India for the month of April 1902. Royal 8vo. Stitched. 8*a*. or 9*d*. (2*a*.)

Trade and Navigation Accounts of British India for the month of June 1902. No. 3. Royal 8vo. Stitched. 8a. or 9d. (2a.)

Area and yield of certain crops from 1891-1892 to 1901-1902. F'cap. Paper cover. 5a. or 6d. (8a.)

Accounts relating to the Trade carried by Rail and River in India in the quarter and in the twelve months ending March 1902, compared with the corresponding periods of the years 1900 and 1901. No. 4 of 1901-1902. F'cap. Paper cover. 8a. or 9d. (2a.)

Agricultural Statistics of India for the years 1896-1897 to 1900-1901, 17th issue, in two parts. F'cap. Board. Both parts Rs. 3-8a. or 5s. 3d. (12a.)

COMPTROLLER-GENERAL.

Civil Estimates, 1902-1903. F'cap. Board. aVols. I and II. Rs. 3 or 4s. 6d. (13a.) each volume.

FOREIGN DEPARTMENT.

Report on Sanitation, Dispensaries, and Jails in Rajputana for 1900 and on Vaccination for the year 1900-1901. F'cap. Board. Re 1 or 1s. 6d. (4a.)

MILITARY DEPARTMENT.

List of Light houses and Light-vessels in British India, including those in the Gulf of Aden as existing at the end of 1901. 21st Issue. Royal 8vo. Board. Re. 1 or 1s. 6d. (2a.)

The Quarterly Indian Army List for July 1902. Royal 8vo. Paper cover. Rs 3 or 4s. 6d. (2a.)

Military Works Services Classified List and istribution Return. Corrected up to 30th June 1902. Royal 8vo. Paper cover. 4a. or 5d. (1a.)

General List of Vouchers required to support Credits and Charges in Supply and Transport Cash and Store Accounts. India. Royal 8vo. Paper cover. 10a. or 1s. (3a.)

PUBLIC WORKS DEPARTMENT.

Administration Report on the Railways in India for the calendar year 1901. F'cap. Paper cover. Rs. 2 or 2s. 8d. (8a.)

Public Works Department Classified List and Distribution Return of Establishment. Corrected to 30th June 1902. Super Royal 8vo. Paper cover. Rs. 2 or 3s. (4a.)

Classified List of the Subordinate Establishment. Corrected to 30th June 1902. Super Royal 8vo. Paper cover. 4a. or 5d. (1a.)

REVENUE AND AGRICULTURE DEPARTMENT.

Technical Art Series for 1901. Together with their explanatory text and cover. Nos. I to XII. 4a. or 5d. (3a.) per plate.

Report of the Director of the Botanical Survey of India for the year 1901-1902. F'cap. Stitched. As. 3 or 3d. (1a.)

List of Books published from January to June 1902.

LEGISLATIVE DEPARTMENT.

Chronological Tables of the Indian Statutes compiled, under the orders of the Government of India, by F. G. Wigley, Esq. Royal 8vo. Cloth. *Rs.* 4 or 6s. (7a.)

The Indian Penal Code (Act XLV of 1860), as modified up to the 1st July 1899, and with foot-notes brought down to 1st April 1901. *Rs.* 2-8 or 3s. 9d. (6a.)

The Indian Factories Act, 1881, as modified up to the 1st April 1891 (with foot-notes brought down to 1st July 1901). 6a. 6p. or 6d. (1a. 6p.)

Effect of Legislation for 1898, 1899, and 1900. *Re.* 1 or 1s. 6d. (2a.)

Chronological Tables of the Indian Statutes, 1901. *Re.* 1 or 1s. 6d. (2a.)

A Digest of Indian Law Cases, Vol. III. Cloth bound. *Rs.* 12 or 18s. (10a.)

Ditto ditto ditto. Quarter bound. *Rs.* 13 or 19s. 6d. (10a.)

Act IX of 1901. An Act further to amend the Indian Articles of War. 1a. or 1d. (1a.)

Act X of 1901. An Act further to amend the Court-fees Act, 1870. 1a. 3p or 1d. (1a.)

Act XI of 1901. An Act to facilitate the citation of certain Enactments and to amend and repeal certain obsolete Enactments.

Regulation III of 1901. A Regulation further to provide for the suppression of crime in certain frontier districts. 7a. 6p. or 9d. (1a. 6p.)

Regulation IV of 1901. A Regulation to make better provision for the suppression of murderous outrages in certain frontier tracts. 2a. 6p. (1a.)

Regulation V of 1901. A Regulation further to amend the Upper Burma Land and Revenue Regulation, 1899. 1a. 9p. or 2d. (1a.)

Regulation VI of 1901. A Regulation to repeal so much as is unrepealed of the Punjab Frontier Regulation, 1872, and of the Hazara Settlement Rules, 1a. or 1d (1a.)

Regulation VII of 1901. A Regulation to alter certain of the laws in force in the North-West Frontier Province, to declare that certain Enactments are in force therein, and to bar the application of certain others hereto. 11a. or 1s. 3d. (2a.)

Corrigendum slip for Act XIII of 1900. 1a.

Title-page and Contents to Acts of 1901. 1a. 6p. (1a.)

Index to Acts of 1901. 2a. 9p. or 3d. (1a.)

The European Vagrancy Act, 1874 (IX of 1874), as modified up to 1st December, 1901. 6a. 6p. or 7d. (1a.)

The Chaukidars Act, 1856 (XX of 1856), as modified up to 1st December, 1901. 7a. 6p. or 8d. (1a.)

The Registration of Ships Act, 1841 and 1850 (X of 1841 and XI of 1850), as modified up to 1st December 1893, and with foot-notes brought down to 1st December, 1901. 7a. or 7d. (1a.)

Table showing the effect of Legislation in the Governor-General's Council during 1901. 6a. or 6d. (1a.)

LIST OF TRANSLATIONS AND TRANSLITERATIONS OF ACTS PUBLISHED FROM 1ST OCTOBER 1901 TO 31ST MARCH 1902.

The Cattle-trespass Act, 1871 (I of 1871), as modified up to the 1st April 1901. In Urdu. 2a. (1a.)

Ditto. In Hindi. 2a. (1a.)

Act IX of 1901 (an Act further to amend the Indian Articles of War). In Urdu. 3p. (1a.)

Ditto. In Hindi. 3p. 1a.

Act X of 1901 (an Act further to amend the Court-fees Act, 1870). In Urdu. 3p. (1a.)

Ditto. In Hindi. 3p. (1a.)

HOME DEPARTMENT.

Chronological Tables for 1902, embodying Notifications by the Government of Bengal and Government of India prescribing holidays during the year with corresponding dates in English, Bengali, Velati, Fusli, etc. Royal 8vo. Paper cover. 4a. or 4d. (1a.)

Annual Report of the Sanitary Commissioner with the Government of India, 1900, with Appendices and Returns of Sickness and Mortality among European Troops, Native Troops, and Prisoners in India, for the year. F'cap. Boards. *Rs.* 3 or 4s. 6d. (8a.)

Report of Proceedings of the Central Indigenous Drugs Committee of India, Volume I. Royal 8vo. Board. Rs. 3-8 or 5s. 3d (7a.)

List of Europeans and others in the English Factories in Bengal at the time of the Siege of Calcutta in the year 1756, with an appendix containing lists of European Sufferers. By S. Charles Hill, Esq., B.A., B.SC. Super-Royal 4to. Paper cover. Rs. 2 or 3s. (3a.)

Judicial and Administrative Statistics for British India. 6th issue, 1900-1901, and preceding years. F'cap. Board. Rs. 2 or 3s.(10a.)

The Countess of Dufferin's Fund Seventeenth Annual Report of the National Association for Supplying Female Medical Aid to the Women of India for the year 1901. Super-Royal 8vo. Re. 1 or 1s. 4d. (3a.)

DEPARTMENT OF REVENUE AND AGRICULTURE.

List of Officers in the Survey and other Scientific and Minor Departments subordinate to the Government of India in the Department of Revenue and Agriculture, corrected to 1st July 1901. Royal 8vo. Paper cover. 8*a.* or 9*d.* (2*a.*)

Report of the Committee on the Establishment of Co-operative Credit Societies in India. F'cap. Paper cover. 4*a.* or 5*d.* (2*a.*)

Forest Flora of the School Circle, North-Western Provinces, being a descriptive list of the indigenous woody plants of the Shaharanpur and Dehra Dun districts and the adjoining portions of the Tehri-Garhwal State in the North-Western Provinces, with Analyses. Double-Crown. 16mo. Full cloth. Re. 1-8 or 2*s.* (3*a.*)

Archæological Exploration in Chinese Turkestan. By Dr. M. A. Stein. Royal 4to. Cloth. Rs. 4 or 6*s.* (4*a.*)

Land Revenue Policy of the Indian Government. Royal 8vo. Cloth. 10*a.* or 1*s.* (4*a.*)

FOREIGN DEPARTMENT.

Report on the Administration of the Baluchistan Agency for 1900-1901. Re. 1-8 or 2*s.* 3*d.* (3*a.*)

Report on the Administration of the Hyderabad Assigned Districts for the year 1900-1901. F'cap. Limp cover. Rs. 3-12 or 5*s.* 6*d.* (6*a.*)

Report on the Political Administration of the territories within the Central India Agency for 1900-1901. F'cap. Limp cover. *Re.* 1-8 or 2*s.* (3*a.*)

Annotated Returns of the Dispensaries in Central India for 1900. F'cap. Limp cover. *Re.* 1-8 or 2*s.* (3*a.*)

Report on the Administration of the Civil and Military Station of Bangalore for the year 1900-1901. F'cap. Board. 8*a.* or 9*d.* (2*a.*)

Grammar and Vocabulary of Waziri Pashto. By J. G. Lorimer, Esq., I.C.S. Royal 8vo. Board. Rs. 3 or 4*s.* 6*d.* (5*a.*)

FINANCE AND COMMERCE DEPARTMENT.

List of Officers in the Finance and Commerce Department. Corrected to December 1901; to April 1902. 4*a.* or 5*d.* (1*a.*) each.

Papers relating to the proposed Establishment of a Central Bank in India. F'cap. Board. Re. 1 or 1*s.* 6*d.* (4*a.*)

Administration Report of the Mint at Bombay and Calcutta for 1900-1901. F'cap. Paper cover. Re. 1 or 1*s.* 6*d.* (2*a.*)

Schedule IV of the Indian Tariff Act (VIII of 1878) of 1902. Royal 8vo. Stitched. 6*a.* or 6*d.* (1*a.*)

STATISTICAL DEPARTMENT.

Trade and Navigation Accounts of British India for the months of December 1901 to May 1902. Royal 8vo. Stitched. 8*a.* or 9*d.* (2*a.*) each.

Accounts of the External Land Trade of British India for the months of September 1901 to March 1902. Royal 8vo. Stitched. 8*a.* or 9*d.* (2*a.*) each.

Accounts relating to the Trade carried by Rail and River in India in the quarter ending September 1901. Compared with the corresponding periods of the years 1899 and 1900 No. 2 of 1901-1902. F'cap. Paper cover. 8*a.* or 9*d.* (2*a.*)

Accounts relating to the Trade carried by Rail and River in India in the quarter ending December 1901. Compared with the corresponding periods of the years 1899 and 1900. No. 3 of 1901-1902. F'cap. Paper cover. 8*a.* or 9*d.* (2*a.*)

Accounts of the Trade of the French Possessions in India in the year ending 31st March 1901, and the four preceding years F'cap. Paper cover. 2*a* or 3*d.* (1*a*)

Statistics of Cotton Spinning and Weaving in the Indian Mills in January, February, and March 1902; in the ten months, April 1901 to January 1902; in the eleven months, April 1901 to February 1902, and in the twelve months, April 1901 to March 1902. Compared with the corresponding period of 1899-1900 and 1900-1901. Royal 8vo. Stitched. 2*a.* or 2*d.* (1*a.*) each.

Accounts of the Trade of Aden in the year ending 31st March 1901, and the four preceding years. F'cap. Paper cover. 10*a.* or 1*s.* (2*a.*)

Accounts of the Trade of the Portuguese Possessions in India in the year 1899-1900 and the four preceding years. F'cap. Paper cover. 2*a.* 3*d.* (1*a.*)

Prices and Wages in India. Nineteenth issue, 1902. Super-Royal 4to. Board. Re. 1-8 or 2*s* (3*a.*)

COMPTROLLER-GENERAL.

Finance and Revenue Accounts of the Government of India for 1900-1901. F'cap. Board. Rs. 2 or 3*s.* (8*a.*)

Appropriation Report on the Accounts of the Government of India for 1900-1901. By A. F. Cox, Esq. F'cap. Board. 8*a.* (5*a*).

MILITARY DEPARTMENT.

The Monthly Indian Army List for February to March, May, June 1902. Royal 8vo. Paper cover. Re 1-8 or 2*s.* 3*d.* (4*a.*) each.

Return of Wrecks and Casualties in Indian Waters for the year 1900. F'cap. Stiff cover. 12*a.* or 1*s.* (3*a.*)

Military Works Services Classified List and Distribution Return. Corrected up to 31st December 1901. Royal 8vo. Paper cover. 4*a.* or 5*d.* (1*a.*)

Indian Military Budget Estimate for the year 1902-1903. F'cap. Board. Re. 1-8 or 2*s.* 3*d.* (8*a.*)

PUBLIC WORKS DEPARTMENT.

Public Works Department Classified List and Distribution Return of Establishment. Corrected up to 31st December 1901. Super-Royal 8vo. Paper cover. Rs. 2 or 3*s.* (4*a.*)

Classified List (Public Works Department), Subordinate Establishment. Corrected up to 31st December 1901. Super-Royal 8vo. Paper cover. 4*a.* or 4*d.* (1*a.*)

Budget Estimate of the Indo-European Telegraph Department for the year 1902-1903. F'cap. Paper cover. 8*a.* or 9*d.* (1*a.* 6*p.*)

Budget Estimate of the Indian Telegraph Department for the year 1902-1903. F'cap. Paper cover. 8*a.* or 9*d.* (1*a.* 6*p.*)

History of Services of the Officers of the Engineer, Accounts, and State Railway Revenue Establishments. Corrected to 31st December 1901. In two Volumes. Royal 8vo. Board. Vol. I, Rs. 2-8 or 3*s.* 9*d.* (6*a.*). Vol. II Rs. 2-8 or 3*s.* 9*d.* (6*a.*) Complete, Rs. 5 or 7*s.* 6*d.* (9*a.*)

List of new books for sale at the Thomason College, Roorkee, which were not advertised before.

Roorkee Treatise on "Railways," 4th Edition, revised by F. Wolley Dod, F.C.H. Price, Rs. 8 per copy.

Roorkee Treatise on "Irrigation Works." By Lieutenant-Colonel J. Clibborn, I.S.C., B.A., L.C.E., C.I.E. Price Rs. 9 per copy.

Roorkee Treatise on "Sanitary Engineering." Compiled by Lieutenant-Colonel J. Clibborn, I.S.C., B.A., L.C.E., C.I.E. Price, Rs. 4-8 per copy.

Roorkee Manual of "Applied Mechanics," Volume II. The stability of structures mostly by graphic methods, by Lieutenant-Colonel J. H. C. Harrison, R.E. Price, Rs. 8-2 per copy.

Roorkee Manual of Hydraulics. Price per copy, Re. 1-4. (No. XIX, Elementary Treatise). By E. F. Tipple, Esq., B.A.

Designs for Wooden Bridges, together with rules for calculating the area of waterway, &c., and Plates. By late Rai Bahadur Kunhya Lal. Price per set, Rs. 4-2.

Pamphlet on Examination for Acid Radicals: Tables giving Analysis of Acids. Price per copy, 8a.

Pamphlet on Examination for Acid Bases: Tables giving Analysis of Metallic Bases. Price, 8a. per copy.

Pamphlet on Note on Masonry Arches (College publication). Price, 4a. per copy.
Pamphlet on Small Direct Well Pumping Installations. Price, 4a. per copy.
Pamphlet on Experiments made on the passage of water through the sand of the Chenab River at the Khanki Weir. By Lieutenant-Colonel J. Clibborn, I.S.C., C.A., L C E., C.I.E. Price per copy, 12a.
Indian Household Account Book for a period of two years, comprising Daily Table Expense Account, Bread, Butter and Milk Account, Dhobey's Account, Servants' Wages Account, etc. Price, Rs. 3 per copy.

Cash must accompany order. Articles are sent by V.-P. P. to persons in Government employment only.

Application is to be made to the Curator, Thomason College Book Depôt, Roorkee.

Half-yearly list of new books and periodicals for sale at the Library of the Asiatic Society of Bengal, 57 Park Street, Calcutta.

ASIATIC SOCIETY'S PUBLICATIONS.

Proceedings Nos. 9 to 11 of 1901 and No. 1 of 1902, at 8a.
Journal, Part I, No. 2 of 1901, at Re. 2.
" Part II, No. 2 of 1901, at Re. 2.
" Part III, No. 2 of 1901, and Part III, No. 1 of 1902, at Re. 2.

BIBLIOTHECA INDICA.

Upamitibhavaprapancha Katha. Fasc. 4 at 6a.
Catapatha Brahmana. Vol. I, Fasc. 5, at 6a.
Varsakriya Kaumudi. Fasc. 3 and 4, at 6a.
Nityacarapaddhati. Fasc. 2 and 3, at 6a.
Apastamba Sranta Sutra. Vol. III, Fasc. 16, at 6a.
Mahabhasyaprodipodyata. Vol. II, Fasc. 2 and 3, at 6a.
Al-Muquddasai. (English.) Vol. I, Fasc. 2, at 12a.

List of Books published by the Meteorological Department during the current quarter.

Monthly Weather Review of India for the month of February 1902. By John Eliot and Lala Hem Raj (illustrated by 5 plates). Quarto. Paper cover. Re. 1.
Indian Meteorological Memoirs, Volume XII, Part III. By John Eliot (illustrated by 68 plates). Quarto. Paper cover. Rs. 3.
Indian Meteorological Memoirs, Volume XII, Part IV. By W. L. Dallas, Quarto. Paper cover. Rs. 3.
Monthly Weather Review of India for March 1902. By John Murray and Hem Raj. (Illustrated by 5 plates.) Quarto. Paper cover. Re. 1.

List of books published by Meteorological Department from 1st January to 30th June, 1902.

Monthly Weather Review of India, from September, 1901, to January, 1902. By W. L. Dallas (illustrated by five plates). Quarto. Paper cover. Re. 1 per month.
Report of the Director, Government Observatory, Bombay, for the year ending 31st December, 1901. By N. A. F. Moos. Quarto. Paper cover.
Report on the Kodaikanal and Madras Observatories for the period 1st April to 31st December, 1901. By C. Michie Smith. Quarto. Paper cover.
Indian Meteorological Memoirs, Volume XII, Part II. By John Eliot. Quarto. Paper cover. Rs. 3.
Indian Meteorological Memoirs, Volume XIII. By John Eliot. Quarto. Paper cover. Rs. 5.

The Indian Law Reports.

Published under Authority.

THE Indian Law Reports, published under the authority of the Governor-General in Council, appear in monthly parts, published as soon as possible after the first of each month at Calcutta, Madras, Bombay, and Allahabad, and comprise four series—one for the Calcutta High Court, a second for the Madras High Court, a third for the Bombay High Court, and a fourth for the Allahabad High Court. The cases heard by the Privy Council on appeal from each High Court are reported in the Series for that High Court. Cases heard by the Privy Council on appeal from Provinces in India not subject to any High Court are reported in the Calcutta Series.

The Calcutta Series is distributed by the Bengal Secretariat Book Depôt, and the Madras, Bombay, and Allahabad Series are distributed direct from Madras, Bombay, and Allahabad respectively.

In supersession of the previous advertisements, on and from the 1st January 1889 the terms of subscription and sale will be as follows for current issues as well as for back numbers of the reports from 1876:—

Terms of subscription payable annually in advance.

For the complete series, *including postage* (Inland rate) Rs. 22-8.

Ditto, ditto (Overland rate) Rs. 28.

	Without postage.	With postage.
	Rs. A. P.	Rs. A. P.
For the Calcutta Series	10 0 0	12 8 0
,, each of the Madras, Bombay, and Allahabad Series	6 0 0	7 0 0
,, a part of the Calcutta Series purchased separately (*inclusive of postage in India*)	.....	2 0 0
,, a part of each of the Madras, Bombay, and Allahabad Series purchased separately (*inclusive of postage in India*)	.....	1 0 0

The following are the rates at which deductions will be made for parts out of print and at which duplicate copies will be supplied to subscribers when required in place of copies lost in transit, provided complaint of non-receipt is made to the Publisher within three months of the date of publication:—

	For town.	For mufassal.
	Rs. A. P.	Rs. A. P.
For the Calcutta Series, per copy ...	0 8 9	0 10 3
,, each of the Madras, Bombay, and Allahabad Series, per copy ...	0 5 3	0 5 9
,, the Calcutta Series, for the year	7 2 6	8 6 3
,, each of the Madras, Bombay and Allahabad Series, for the year	4 4 6	4 11 3

Persons desiring to subscribe for or purchase the Report should apply to—

The Superintendent, Government Press, Madras.

,, Superintendent, Government Central Press, Bombay.

,, Curator of Government Books, United Provinces of Agra and Oudh, Allahabad.

,, Officer in charge, Bengal Secretariat Book Depôt, Calcutta.

Orders and subscriptions for 1902 should be at once registered and remitted by money-order payable to the Treasurer, Bengal Secretariat, Calcutta.

ADVERTISEMENTS will be received for publication on the wrappers of the Indian Law Reports, Calcutta Series, at the following rates, payable in advance—

	One page.	Half page.	Quarter page.
	Rs.	Rs.	Rs.
For one issue ...	20	14	9
,, three issues ...	55	36	24
,, six ,, ...	100	68	45
,, nine ,, ...	145	96	64
,, twelve ,, ...	180	120	80

SEVERAL volumes of the BENGAL LAW REPORTS, from August 1868 to December 1875, and FULL BENCH RULINGS, Parts I and II, are available at the following rates:—

	Without postage.	With postage.
	Rs. A. P.	Rs. A. P.
Bengal Law Reports, for one year ...	20 0 0	22 8 0
Single copies, Rs. 2 per copy.		
Full Bench Rulings, Parts I and II ...	20 0 0	22 8 0

Obtainable at the Bengal Secretariat Book Depôt, Writers' Buildings, Calcutta.

Remittances to be forwarded to the Treasurer, Bengal Secretariat, Writers' Buildings, Calcutta.

The complete series of the INDIAN LAW REPORTS for the years 1876 to 1885, and 1890 to 1892, 1894, 1896 to 1901 having now been reprinted, are available, and may be purchased for all the years, or any particular year, on application to the Officer in charge, Bengal Secretariat Book Depôt.

The wanting parts of the Reports for the remaining years are being reprinted, and complete Reports from the beginning to date will be available shortly.

NOTICE TO SUBSCRIBERS.

SUBSCRIBERS are hereby informed that, unless complaint of non-receipt of any number is made to the Publisher of the series within three months of the date of publication, the benefits of the subscription rates for copies lost in transit will not be allowed, and full rates will be charged. The price per copy of each of the four series at subscription rates and at full rates is shown below:—

	PER COPY. Subscription rate.	
	Town.	Mofussal.
	Rs. A. P.	Rs. A. P.
Calcutta Series	0 8 9	0 10 3
Each of the Madras, Bombay, and Allahabad Series ...	0 5 3	0 5 9

	Full rate.	
	Town.	Mofussal.
	Rs. A. P.	Rs. A. P.
Calcutta Series	2 0 0	2 0 0
Each of the Madras, Bombay, and Allahabad Series ...	1 0 0	1 0 0

Notice.

THE *CALCUTTA GAZETTE*.

The 1st March 1901.—From this date the subscription to, and postage for, the *Calcutta Gazette* will be at the following rates, payable in advance:—

PER ANNUM.	For Calcutta.	For the Mufassal, including postage.
	Rs. A.	Rs. A.
Entire *Gazette*	15 0	20 0
Parts I, Ia and Ib together ...	5 0	7 8
Part II	1 0	2 12
Parts III, IV and IVa together	4 0	6 0
,, V and VI together ...	2 0	3 0
Appendix (Marine Notifications)	1 0	2 12
Supplement	5 0	7 8
PER ISSUE.		
Entire *Gazette*	0 8	0 10
Supplement	0 4	0 5

N. B.—Separate Parts of each issue of the *Gazette*, and occasionally important Rules and Extracts, can be obtained from the Officer in charge, Bengal Secretariat Book Depôt, at the rate of one anna for every sixteen pages or a fraction thereof. Postage according to weight.

RATES FOR ADVERTISEMENTS in the *Calcutta Gazette*:—

Full Page, per issue	Rs. 20
Half ,, ,, ...	,, 10

Casual advertisements, 4 annas per line.

The Review of the Maritime Trade of Calcutta for the year 1901-1902, prepared by the Collector of Customs, may now be obtained on application to the Superintendent, Statistical Department, Custom House, Calcutta. Price Re. 1.

The Volume of the Annual Statement of the Sea-borne Trade and Navigation, containing detailed statistics of the Foreign and Coasting Trade of Bengal, to go with the above, is also ready and can be obtained from the same source. Price Rs. 6.

APPENDIX TO

The Calcutta Gazette.

WEDNESDAY, SEPTEMBER 24, 1902.

NOTICES TO MARINERS.

GOVERNMENT OF BENGAL—MARINE DEPARTMENT.

NOTICE TO MARINERS—No. 273.

[First Publication.]

BAY OF BENGAL—CHITTAGONG COAST.

Kutabdia island—Dolphin shoal buoy relaid.

WITH reference to Notice to Mariners No. 199, dated the 5th July last, issued by this office, a further telegraphic communication has been received from the Port Officer, Chittagong, stating that Dolphin shoal buoy, Kutabdia island, has been relaid in five fathoms reduced; the light-house bearing east five miles.

E. J. BEAUMONT, COMDR., R.I.M.,
Port Officer of Calcutta.

Published for general information.

C. B. BAYLEY,
Asst. Secy., Marine Department.

CALCUTTA, *the 20th September 1902.*

GOVERNMENT OF BENGAL—MARINE DEPARTMENT.

NOTICE TO MARINERS—No. 274.

[First Publication.]

AFRICA, NORTH-EAST—GULF OF ADEN, NORTHERN SHORE.

Aden harbour—Shoal marked by buoy.

THE British Admiralty has given notice (No. 519 of 1902) of the existence of a shoal patch, with a depth of 18 feet over it, to the west-north-westward of Anadyr wreck-marking light-vessel, situated with Ras Marbut fort, bearing S. 77° E., distant 16 cables, and Jezirat Sálil, S. 36° W.; it is marked by a red buoy.

Approximate position, lat. 12° 47½′ N., long. 44° 57′ E.

(Variation 2° Westerly in 1902.)

This Notice affects the following Admiralty Charts:—Aden, No. 7: Also Red Sea, &c., Pilot, 1900, page 350.

E. J. BEAUMONT, COMDR., R.I.M.,
Port Officer of Calcutta

Published for general information.

C. B. BAYLEY,
Asst. Secy., Marine Department.

CALCUTTA, *the 20th September 1902.*

GOVERNMENT OF BENGAL—MARINE DEPARTMENT.

NOTICE TO MARINERS—No. 275.

[First Publication.]

AUSTRALIA, SOUTH—PORT PIRIE APPROACH.

Eastern shoal—Intended light.

THE British Admiralty has given notice (No. 540 of 1902) that about the first week in August, an *occulting* light would be established in a structure in course of erection on the northern end of Eastern shoal, in the approach to ports Augusta and Pirie.

Approximate position, lat. 33° 4½′ S., long. 137° 48′ E.

Further notice will be given when the particulars of this light are known.

This Notice affects the following Admiralty Charts:—St. Vincent and Spencer gulfs, No. 2389b; Wood point to Lowly point, No. 403: Also List of Lights, part VI, 1902, page 188; Australia Directory, vol. I, 1897, page 249; and Supplement, 1900, page 13.

E. J. BEAUMONT, COMDR., R.I.M.,
Port Officer of Calcutta.

Published for general information.

C. B. BAYLEY,
Asst. Secy., Marine Department.

CALCUTTA, *the 20th September 1902*

GOVERNMENT OF BENGAL—MARINE DEPARTMENT.

NOTICE TO MARINERS—No. 276.

[First Publication.]

AUSTRALIA, SOUTH—PORT ADELAIDE RIVER APPROACH.

Wonga shoal light-house—Fog gong established.

THE British Admiralty has given notice (No 547 of 1902) that during thick or foggy weather a gong will be sounded for the space of *half a minute*, at intervals of *five minutes*, at the light-house on Wonga shoal.

Approximate position, lat. 34° 50½′ S., long. 138° 27′ E.

This Notice affects the following Admiralty Charts:—St. Vincent and Spencer gulfs, No. 2389b; port Adelaide, Nos. 1752, 1750: Also List of Lights, part VI, 1902, No 1070; and Australia Directory, vol. I, 1897, page 331.

E. J. BEAUMONT, COMDR., R.I.M.,
Port Officer of Calcutta.

Published for general information.

C. B. BAYLEY,
Asst. Secy., Marine Department.

CALCUTTA, *the 20th September 1902.*

GOVERNMENT OF BENGAL—MARINE DEPARTMENT.

NOTICE TO MARINERS—No. 282.

[Second Publication.]

CHINA SEA—CARIMATA STRAIT.

Serutu island—Light established.

WITH reference to Notice to Mariners No. 93, dated the 12th April 1902, issued by this office, the British Admiralty has given further notice (No. 502 of 1902) that telegraphic information just received states that the 3rd order *white flashing* light *every five seconds*, elevated 574 feet above high water, and said to be visible in clear weather from a distance of 30 miles, has been established on an iron framework tower, painted white, erected upon a hill near the western point of Serutu island, northern entrance to Carimata strait.

Approximate position, lat. 1° 43′ S., long. 108° 41½′ E.

This Notice affects the following Admiralty Charts:—Eastern Archipelago, No. 941a; Carimata strait, No. 2160: Also, List of Lights, part VI, 1902, page 102; and China Sea Directory, vol. I, 1896, page 484.

E. J. BEAUMONT, COMDR., R.I.M.,
Port Officer of Calcutta.

Published for general information.

C. B. BAYLEY,
Asst. Secy., Marine Department.

CALCUTTA, *the 13th September 1902.*

GOVERNMENT OF BENGAL—MARINE DEPARTMENT.

NOTICE TO MARINERS—No. 263.

[Second Publication.]

JAPAN—INLAND SEA—OSAKA ROAD.

Aji Kawa Guchi—Wreck.

THE British Admiralty has given notice (No. 509 of 1902) that the wreck of a sailing vessel with two masts standing about 15 feet above water lies sunk in Osaka road in a position with Tempozan lighthouse bearing N. 79° E., distant $2\frac{4}{10}$ miles, and Sakai harbour light S. 38° E.

Approximate position, lat. 34° 39′ N., long. 135° 22½′ E.

(*Variation 4° Westerly in 1902.*)

This Notice affects the following Admiralty Charts:—Approaches to Kobe, No. 2680; Kobe and Osaka, No. 16: Also, China Sea Directory, vol. IV, 1894, page 353.

E. J. BEAUMONT, COMDR., R.I.M.,
Port Officer of Calcutta

Published for general information.

C. B. BAYLEY,
CALCUTTA, *the 13th September 1902.* *Asst. Secy., Marine Department.*

GOVERNMENT OF BENGAL—MARINE DEPARTMENT.

NOTICE TO MARINERS—No. 264.

[Second Publication.]

JAPAN—KIUSIU, WEST COAST.

Goto islands—Rocks in the vicinity of Ojika Shima.

THE British Admiralty has given notice (No. 510 of 1902) of the existence of the undermentioned rocks in the vicinity of Ojika shima, Goto islands:—

a. A rock with a depth of one fathom over it, in lat. 33° 11′ 40″ N., long. 129° 5′ 30″ E.

There is a rock named Okino kazikaki, with a depth of 1½ fathoms over it, situated about 2 cables to the northward of the above.

b. A rock with a depth of 2 fathoms over it, in lat. 33° 12′ N., long. 129° 0′ E.

This Notice affects the following Admiralty Charts:—Nagasaki to Karatsu, No. 359: Also, China Sea Directory, vol. IV, 1894, page 446.

E. J. BEAUMONT, COMDR., R.I.M.,
Port Officer of Calcutta.

Published for general information.

C. B. BAYLEY,
CALCUTTA, *the 13th September 1902.* *Asst. Secy., Marine Department.*

GOVERNMENT OF BENGAL—MARINE DEPARTMENT.

NOTICE TO MARINERS—No. 265.

[Second Publication.]

JAPAN—INLAND SEA—HARIMA NADA.

Sakoshi bay—Okayuma port—Rocks and shoals.

THE British Admiralty has given notice (No. 511 of 1902) of the existence of the following rocks in the undermentioned positions in Harima nada—

SAKOSHI BAY—

A rock, with a depth of 3 fathoms over it, situated with the eastern extremity of Ikisima bearing N. 6° E., distant 8 cables, and northern extremity of Kazura sima S. 83° E.

Approximate position, lat. 34° 45′ N., long. 134° 26′ E.

This rock is on the extremity of a ledge, with a depth of 3 fathoms over it extending from the northern point of Otomari bay.

A rock, named Toinosowai, with a depth of 3¾ fathoms over it, situated with the south-eastern point of Utabo sima bearing S. 78° W., distant 3¼ cables, and the north-eastern point of the same island N. 65° W.

Approximate position, lat. 34° 41′ N., long 134° 18′ E.

OKAYAMA PORT—

(1) A depth of 3½ fathoms, sand and mud, has been found on the bank in the eastern approach to Okayama, situated with Kome saki bearing N 35° W., distant $1\frac{2}{10}$ miles, and northern extremity of Oko sima hana, the first point southward of Oko sima, N. 82° W.

(2) A shoal, with a depth of 4¾ fathoms, situated with Ishikiri point bearing N. 42° W., distant 12 cables, and south extremity of Oko sima hana S. 61° W. There is a depth of 5 fathoms three-quarters of a cable N. 31° W. from the above shoal.

(3) A shoal, with a depth of 3 fathoms over it, situated with Ishikiri point bearing N. 19° W., distant 11 cables, and southern extremity of Oko sima hana S. 57° W.

(4) A shoal, with a depth of 3 fathoms over it, situated with Kome saki bearing S. 22° W., distant 5¼ cables, and Kanga ishi Yama S. 78° W.

(5) Aiga she rock, situated 9 cables N. 8° E. from Kome saki, has a depth over it of about 5 feet.

Approximate position, lat. 34° 35′ N., long. 134° 2¾′ E.

To the westward of lines connecting shoals mentioned in 3, 4, 5, there are depths of less than 3 fathoms.

PORT WUSIMADO—

A shoal, with a depth over it of from 1½ to 3 fathoms, extends from a position with Naka-no-ko sima bearing S. 62° E., distant 6½ cables, to a position with the same island bearing N. 80° E., distant 7 cables.

Approximate position, Naka-no-ko sima, lat. 34° 36′ N., long 134° 9′ E.

(*Variation 4° Westerly in 1902.*)

This Notice affects the following Admiralty Charts:—Harima nada, No. 137; Harbours and Anchorages, Harima nada, No. 694: Also, China Sea Directory, vol. IV, 1894, pages 370, 371, 374.

E. J. BEAUMONT, COMDR., R.I.M.,
Port Officer of Calcutta.

Published for general information.

C. B. BAYLEY,
Asst. Secy., Marine Department.

CALCUTTA, *the 13th September 1902.*

GOVERNMENT OF BENGAL—MARINE DEPARTMENT.

NOTICE TO MARINERS—No. 266.

[Second Publication.]

JAPAN—KIUSIU, WEST COAST.

Hirado sima—Particulars of Betto se, a pinnacle rock.

THE British Admiralty has given notice (No. 516 of 1902) of the existence of a small pinnacle rock, named Betto se, with a depth of 4¾ fathoms over it, off the west coast of Hirado sima. It is situated with Tateba sima bearing S. 43° E., distant 13½ cables, and Tobu saki in line with Nakai no sima N. 47° E.

Approximate position, lat. 33° 18¼′ N., long. 129° 23¾′ E.

There are depths of 18 and 23 fathoms around this rock.

(*Variation 4° Westerly in 1902.*)

This Notice affects the following Admiralty Charts:—Western coasts of Kiusiu and Nipon, No. 353; Nagasaki to Karatsu, No. 359; Hirado island, &c., No. 140: Also, China Sea Directory, vol. IV, 1894, page 515; and Supplement, 1898, page 30.

E. J. BEAUMONT, COMDR., R.I.M.,
Port Officer of Calcutta.

Published for general information.

C. B. BAYLEY,
Asst. Secy., Marine Department.

CALCUTTA, *the 13th September 1902.*

GOVERNMENT OF BENGAL—MARINE DEPARTMENT.

NOTICE TO MARINERS—No. 267.

[Second Publication.]

BAY OF BENGAL—COROMANDEL COAST.

Negapatam roadstead—Submerged danger marked "Wreck."

THE Presidency Port Officer, Madras, has given notice (No. 48 of 1902) that a green buoy with the word "Wreck" in white letters has been placed to mark a submerged danger lying 8 feet above bottom and 5 feet in diameter in 25 feet low water, ordinary spring tides, with the following bearings:—

Negapatam Lighthouse	...	... N. 77° W. cor. mag.
South Port Limit obelisk	...	... S. 63° W. „
North Port Limit obelisk	...	... N. 60° W. „
Nagore Mosque	...	... N. 28° W. „

E. J. BEAUMONT, COMDR., R.I.M.,
Port Officer of Calcutta.

Published for general information.

C. B. BAYLEY,
CALCUTTA, *the 15th September 1902.* *Asst. Secy., Marine Department.*

GOVERNMENT OF BENGAL—MARINE DEPARTMENT.

NOTICE TO MARINERS—No. 268.

[Second Publication.]

INDIA, SOUTH-EAST—COROMANDEL COAST.

Negapatam—The buoy marking the wreck of the brig has been replaced.

THE Presidency Port Officer, Madras, has given notice (No. 49 of 1902) that the wreck buoy in 3½ fathoms with the lighthouse bearing W. ¾ N. has been replaced, as a recent search shows that a portion of the wreck of the brig still remains.

E. J. BEAUMONT, COMDR., R.I.M.,
Port Officer of Calcutta.

Published for general information.

C. B. BAYLEY,
CALCUTTA, *the 15th September 1902.* *Asst. Secy., Marine Department.*

GOVERNMENT OF BENGAL—MARINE DEPARTMENT.

NOTICE TO MARINERS—No. 269.

[Second Publication.]

INDIA, EAST—MADRAS COAST.

Vizagapatam light.

WITH reference to Notice to Mariners No. 247, dated 13th August last, issued by this office, the Presidency Port Officer, Madras, has given further notice (No. 50 of 1902) as follows:—

For "*Port Office*" read "*Port Flagstaff.*"

E. J. BEAUMONT, COMDR., R.I.M.,
Port Officer of Calcutta.

Published for general information.

C. B. BAYLEY,
CALCUTTA, *the 15th September 1902.* *Asst. Secy., Marine Department.*

GOVERNMENT OF BENGAL—MARINE DEPARTMENT.

NOTICE TO MARINERS—No. 270.

[Second Publication.]

INDIA, SOUTH-EAST—CEYLON COAST.

Chuttram—Date of exhibition of light.

WITH reference to Notice to Mariners No. 194, dated the 30th June, and No. 248, dated the 13th August 1902, issued by this office, the Presidency Port Officer, Madras, has given further notice (No. 52 of 1902) that the light referred to was duly exhibited on 1st September 1902.

E. J. BEAUMONT, COMDR., R.I.M.,
Port Officer of Calcutta.

Published for general information.

C. B. BAYLEY,
CALCUTTA, *the 15th September 1902.* *Asst. Secy., Marine Department.*

GOVERNMENT OF BENGAL—MARINE DEPARTMENT.

NOTICE TO MARINERS—No. 271.

[Second Publication.]

AUSTRALIA—WIDE BAY BAR.

Hook point—The square beacons kept open.

THE Port Master, Brisbane, has given notice (No. 7 of 1902) that as the Southern Spit is gradually working to the northward, the square beacons on Hook Point for crossing the bar must now be kept open once their own width to the northward. This will lead well clear of the spit, with a depth of 17 feet L W.O.S.T.

Charts affected—Nos. 1030 and 1068; Australian Directory, vol. No. 2.

E. J. BEAUMONT, COMDR., R.I.M.,
Port Officer of Calcutta.

Published for general information.

C B BAYLEY,
CALCUTTA, *the 15th September 1902.* *Asst. Secy., Marine Department.*

GOVERNMENT OF BENGAL—MARINE DEPARTMENT.

NOTICE TO MARINERS—No. 272.

[Second Publication.]

AUSTRALIA—SPENCER GULF.

Port Pirie approach—An occulting light exhibited.

WITH reference to Notice to Mariners No. 233, dated 28th July 1902, issued by this office, the President, Marine Board, Port Adelaide, has given further notice (No. 12 of 1902), informing Masters of vessels, Pilots and others that an occulting light, visible about six miles is now exhibited from a beacon erected on the north end of Eastern Shoal, 400 yds. true north from the present red beacon.

Approximate latitude, 33° 4′ 18″ S., longitude, 137° 48′ 8″ E.

This affects Admiralty Chart No. 2389b and Plan 403.

E. J. BEAUMONT, COMDR., R.I.M.,
Port Officer of Calcutta.

Published for general information.

C. B. BAYLEY,
CALCUTTA, *the 15th September 1902.* *Asst. Secy., Marine Department.*

GOVERNMENT OF BENGAL—MARINE DEPARTMENT.

NOTICE TO MARINERS—No. 258.

[Third Publication]

AUSTRALIA—QUEENSLAND.

Great Sandy Strait entrance—Pilot station discstablished at Inskip point.

THE British Admiralty has given notice (No. 491 of 1902) that, after 30th June 1902, the Pilot station at Inskip point, Great Sandy strait entrance, would be discontinued.

Vessels requiring the services of a pilot through Great Sandy strait are requested to give at least 24 hours' notice to the Marine Department before departure from Brisbane, and similar Notice to the Harbour Office, Rockhampton, or Townsville, if bound from the northward.

Approximate position, lat. 25° 48½′ S., long. 153° 4′ E.

This Notice affects the following Admiralty Charts:—Moreton bay to Sandy cape, No. 1068; Great Sandy strait, No. 1030: Also, Australia Directory, vol. II, 1898, page 152, and Supplement, 1900, page 7.

E. J. BEAUMONT, COMDR., R.I.M.,
Port Officer of Calcutta.

Published for general information.

C. B. BAYLEY,
Asst. Secy., Marine Department.

CALCUTTA, *the 6th September 1902.*

GOVERNMENT OF BENGAL—MARINE DEPARTMENT.

NOTICE TO MARINERS—No. 259.

[Third Publication.]

AUSTRALIA—VICTORIA—PORT PHILLIP ENTRANCE.

Point Lonsdale lighthouse—Night tidal signals intended.

THE British Admiralty has given notice (No. 492 of 1902) that on and after 1st January 1903, in order to indicate the direction of the tidal streams between point Lonsdale and point Nepean *one green fixed* light during the ingoing stream, and *two green fixed* lights during the outgoing stream, will be exhibited at point Lonsdale lighthouse, below the main light.

Approximate position, lat. 38° 18′ S., long. 144° 37′ E.

This Notice affects the following Admiralty Charts:—Port Phillip, Nos. 1171a, 2747a: Also, List of Lights, part VI, 190, No. 1109; and Australia Directory, vol. I, 1897, pages 431, 494.

E. J. BEAUMONT, COMDR., R.I.M.,
Port Officer of Calcutta.

Published for general information.

C. B. BAYLEY,
Asst. Secy., Marine Department.

CALCUTTA, *the 6th September 190.*

GOVERNMENT OF BENGAL—MARINE DEPARTMENT.

NOTICE TO MARINERS—No. 260.

[Third Publication.]

BAY OF BENGAL—BURMA COAST.

Rangoon river—New tidal gauge erected.

THE Bombay Government has given notice (No. 110 of 1902) that information has been received from the Principal Port Officer, Burma, Rangoon, dated 15th August 1902, that a new Tide Gauge has been erected nearly opposite the Syriam Lights. It is ready for reference.

This Notice affects the following Admiralty Chart:—Rangoon river and approaches, No. 833: Also, Bay of Bengal Pilot, 3rd Edition, 1901, page 353.

E. J. BEAUMONT, COMDR., R.I.M.,
Port Officer of Calcutta.

Published for general information.

C. B. BAYLEY,
Asst. Secy., Marine Department.

CALCUTTA, *the 6th September 1902.*

GOVERNMENT OF BENGAL—MARINE DEPARTMENT.

NOTICE TO MARINERS—No. 261.

[Third Publication.]

BAY OF BENGAL—CHITTAGONG COAST.

Karnafuli river—Depth of water in the river channels.

THE Port Officer, Chittagong, has given notice that the following depth of water was found in the river channels by soundings taken on the 5th September and reduced to zero :—

	FT.	IN.
Track No. 1—Outer bar	12	6
Track No. —Inner bar—		
Disc on diamond	10	0
Track No. 3—		
Triangle on cross and ball	23	0
Track No. 4—Guptakhally crossing—		
Tripod on diamond	15	0

E. J. BRAUMONT, COMDR., R I.M.,
Port Officer of Calcutta.

Published for general information.

C. B. BAYLEY,
Asst. Secy., Marine Department.

CALCUTTA, *the 8th September 1902.*

APPENDIX TO

The Calcutta Gazette.

WEDNESDAY, SEPTEMBER 24, 1902.

SECOND QUARTER.

BENGAL LIBRARY CATALOGUE OF BOOKS

FOR THE

Second Quarter ending 30th June 1902.

1	2	3	4	5
Serial number.	Registration number.	Title, with an English translation of the same when not in that language, the language of the book, and the subject.	Name of author, translator, or editor of the book, or any part of it.	Place of printing and publication.
		UNI-LINGUAL BOOKS.		
		ASSAMESE BOOKS.		
		HISTORY (INCLUDING GEOGRAPHY).		
		Educational—		
8	619	Bhárata Buranji. The History of India. Parts I and II. (together.)	Dharmeswar Gosvámí	51-2, Sukea's Street, Calcutta; Nowgong, Assam.
		LANGUAGE.		
		Educational—		
9	440	Jnánánkur. Rudiments of Knowledge ...	Púrna Kánta Deva Sarmá ...	6, College Square, Calcutta; Dibrugar, Assam.
		MISCELLANEOUS.		
10	307	Bara Bejálí Punthi. A Book on Incantations Enlarged.	Divákar Duvrár	Ditto ditto ...
		Educational— POETRY.		
11	316	Kavitá Kusum. Flowers of Poetry ...	Pramod Chandra Bara Thákur ...	Ditto ditto ...
12	377	Bhíma Charitra. Life of Bhíma ...	Ráma Saraswatí	Ditto ditto ...
		RELIGION.		
13	202	Vaishnava Kírttan. The Chanting (of the Names of God) by Vaishnavas.	Sankar Deva and Mádhava Deva ...	Ditto ditto ...
		BENGALI BOOKS.		
		ART.		
297	394	Aloka Chitran Vá Photográphi Sikshá. Painting with the Help of Light or Instruction in Photography.	Manmatha Náth Chakravartí ...	4, William's Lane; 17, Srínáth Dás's Lane, Calcutta.
298	677	Sahaj Behálá O Esrár-Síkshá. Easy Instruction in the Violin and Esrár (A Kind of Native Musical Instrument).	Satís Chandra Datta	127, Masjidbárí Street, Calcutta ...
		BIOGRAPHY.		
299	260	Tápasamálá. Lives of Muhammadan Saints. Part II.	Rev. G. C. Sen	3, Ramánáth Majumdár's Street, Calcutta.
300	326	Indu. (A Name)	Kásí Chandra Ghoshál	211, Cornwallis Street, Calcutta.
301	540	Srímanmaharshi Devendra Náth Thákur Mahodayer Jívan Vrittánter Svalpa Parichay. A Short Account of the Life of Maharshi Devendra Náth Thákur.	Isán Chandra Basu	98, Harrison Road; 20, Cornwallis Street, Calcutta.
302	535	Di, El, Mudir Sankshipta Jívaní. "The Shorter Life of D. L. Moody." Vol. I. (T).	.....	46; 140; Dharmatalá Street, Calcutta ...
303	339	Báji Ráo. (A Name)	Sakhárám Ganes Deuskar ...	25-1, Scott's Lane, Calcutta ... ...
		DRAMA.		
304	1	Rásalílá Gítábhinaya. The opera on the Rásá Sports. Part I.	Rái Rámabandhu Chattopádhyáy, Báhádur.	The Rásesvar Press, Kotchká, Bankura
305	2	Ditto ditto. Part II ...	Ditto ...	Ditto ditto ...
306	3	Ditto ditto. Part III ...	Ditto ...	Ditto ditto ...
307	170	Sarva-Jvara-Gaja-Sinha Vijay-Kábiní Nátak. The Drama on the Story of the Conquest by the Lion to the Elephant of Fever of All Kinds.	Ráma Chandra Kaviratna ...	The Bhajahari Sankhanidhi Press, Dacca
308	156	Ditto ditto ...	Ditto	Ditto ditto ...
309	266	Amar Granthávalí. A Collection of Works by Amar (a Name).	Amarendra Nath Datta ...	68, Beadon Street, Calcutta ...
310	„	Rangálayer Upahár. Presents of the Paper named Rangálay. Part II.	.....	Ditto ditto ...
311	311	Práyaschitta. Atonement	Dvijendra Lál Ráy	63, Bechu Chatterji's Street; 28-1, Jhámápukur Lane, Calcutta.
312	353	Abhimanyubadha Gítábhinay. The Drama on the Slaying of Abhimanyu.	K. K. Yasa	25-3, Tárak Chatterji's Lane; 113, Upper Chitpur Road, Calcutta.
313	469	Amári. Mine Only	Kedár Nath Dás	43, Vrindávan Basák's Street; the Minerva Theatre; Calcutta.
314	679	Mág Sarvasva Vá Pindadán. Wife is the Entire Wealth or The Presentation of Obsequial Rice-balls.	Haripada Chatterji	127, Masjidbárí Street, Calcutta ...
315	682	Sríráma Chandrer Asvamedha Yajna Gítábhinay. The Drama of the Horse Sacrifice of Ráma Chandra.	Párvatí Charan Bhattácháryya ...	333, Upper Chitpur Road; 57-1, Ahírítolá Street, Calcutta.
316	592	Bodhane Visarjjan. Relinquishing the Image on the day of Invocation.	Ahibhúshan Bhattácháryya. ...	17, Nanda Kumár Chaudhurí's 2nd Lane; 201, Cornwallis Street; Calcutta.
		FICTION.		
317	303	Sekspiyar. Shakespeare in Bengali. Vol. IV. (T).	Hárán Chandra Rakshit ...	17, Nanda Kumár Chaudhurí's 2nd Lane, Calcutta; Majilpur, 24-Parganas.
318	635	Ditto ditto Vols. I to IV (together). (T)	Ditto	Ditto ditto ...
319	427	Sasibhúshan. (A Name)	L. C. Náth	34, Musalmánpára Lane; 23, Chauringhi Road; Calcutta.
320	437	Dárogár Daptar. A Dárogá's Papers. Lál Págrí. The Red *Puggri*. (Nos. 113 to 115 together.)	Priya Nath Mukherji	66, Ahírítolá Street; 162, Bow Bázár Street; Calcutta.

Second Quarter ending 30th June 1902.

6	7	8	9	10	11	12	13
Name or firm of printer and of publisher.	Date of issue from the press or of the publication.	Size and number of sheets, leaves, or pages.	Number of edition and number of copies of which the edition consists.	Printed or litho'd.	Price at which the book is sold to the public.	Name and residence of the proprietor of copyright, or any part of it.	Copyright registered or not.
	1902.				Rs. A. P.		
Haricharan De; the author ...	Apl. 2	Dy. 12mo; 380	1st; 1,000	P.	1 8 0	.....	
Nivárun Chandra Ghosh; the author	Mar. 3	Dy. 12mo; 31	9th; 2,000	P.	0 2 0	The author.	
Nivárun Chandra Ghosh; Siva Náth Bhattácháryya.	Feb. 5	Dy. 12mo; 44	3rd; 1,000	P.	0 4 0	Sivanáth Bhattácháryya.	
Ditto ditto ...	Feb. 17	D.fc.16mo; 30	1st; 1,000	P.	0 2 0	The author.	
Ditto ditto ...	„ 20	Dy. 12mo; 44	5th; 2,000	P.	0 4 0	The publisher.	
Nivárun Chandra Ghosh; Sridhar Chandra Barua.	Jan. 30	Dy. 12mo; 44	4th; 2,000	P.	0 5 0	Ditto.	
Amrita Lál Ghosh; S. Lál and Brothers.	Feb. 20	Dy. 12mo; 80	2nd; 1,000	P.	0 8 0	The author, 17 Srínáth Dás's Lane, Calcutta.	
Dína Náth Mánná; Basák and Sons	Apl. 7	Dy. 8vo; 72	1st; 1,000	P.	1 4 0	Basák and Sons, 127, Masjidbárí Street, Calcutta.	
K. P. Náth	Jan. 26	Dy. 8vo; 93	3rd; 500	P.	0 8 0	The Brahmo Mission Office, 3, Ramanáth Majumdár's Street, Calcutta.	
Kárttik Chandra Datta	„ 25	D.fc.16mo; 41	1st; 500	P.	0 2 0	Sasipada Banerji, 29, Madan Mitra's Lane, Calcutta.	
Kunja Vihárí De; the Majumdár Library.	Mar. 7	D.fc.16mo; 128	1st; 1,000	P.	0 8 0	The author, Hugli.	
Joseph Culshaw; the Woman's Union Missionary Society of America.	„ 8	Cr. 8vo; 182	1st; 500	P.	0 2 0	The Woman's Union Missionary Society of America, 140, Dharmatalá Street, Calcutta.	
Sányál & Co.	Jan. 24	D.fc.16mo; 162	1st; 1,000	P.	0 12 0	The author, Calcutta.	
Vijaya Bhúshan Dás; the author ...	Apl. 4	Dy. 8vo; 88	1st; 1,000	P.	.....	The author, Bankura ...	No. 34. Registered, 8th April 1902.
Ditto ditto ...	„ 11	Dy. 8vo; 112	1st; 1,000	P.	0 12 0	Ditto.	
Ditto ditto ...	„ 11	Dy. 8vo; 64	1st; 1,000	P.	0 8 0	Ditto.	
Mahim Chandra De; the author and Nagendra Bhattácharyya.	.....	Dy. 12mo; 10	1st; 40,000	P.	0 0 6	.....	
	1901.						
Ditto ditto ...	Mar. 20	Dy. 12mo; 12	3rd; 40,000	P.	0 0 6	.....	
	1902.						
N. C. Basu ...	Jan. 30	Rl. 8vo; 242	1st; 3,000	P.	.....	The author.	
Ditto	.....	Rl. 8vo; 110	1st 3,000	P.	.....	.....	
G. C. Basu & Co; Indu Bhúshan Sányál.	Jan. 19	Dy. 12mo; 94	1st; 1,000	P.	0 8 0	The author, 28-1, Jhámápukur Lane, Calcutta.	
Hari Charan Dás; K. L. Sil ...	Feb. 16	Rl. 8vo; 168	1st; 1,500	P.	1 8 0	N. C. Sil, 25-3, Tárak Chatterji's Lane, Calcutta.	
	1901.						
Surendra Náth Háldár; Hárán Chandra Mitra.	Nov. 30	D.cr.16mo; 24	1st; 1,000	P.	0 2 0	The author.	
	1902.						
Dína Náth Mánná; Basák and Sons	Apl. 8	Dy. 12mo; 23	2nd; 1,000	P.	0 4 0	Basák and Sons, 127, Masjidbárí Street, Calcutta.	
S. K. Sil; S. K. Sil and Narendra Kumár Sil.	„ 15	Dy. 8vo; 158	1st; 1,000	P.	0 10 0	The publishers, 57-1, Abírítolá Street, Calcutta.	
Sarat Chandra Chakravartí; Gurudás Chatterji.	Mar. 26	Dy. 12mo; 52	2nd; 1,000	P.	0 4 0	The author, 83, Balarám De's Street, Calcutta.	
S. C. Chakravartí; Vípin Vihárí Rakshit.	Jan. 28	Dy. 8vo; 320	1st; 1,030	P.	1 4 0	The author, Majilpur, 24-Parganas.	
Ditto ditto ...	Mar. 16	Dy. 8vo; 614	1st; 1,000	P.	5 0 0	The author, 52, Guruprasád Chaudhuri's Lane, Calcutta.	
K. C. Basu; the Christian Tract and Book Society.	Feb. 28	D.cr.16mo; 36	1st; 1,000	P.	0 1 0	The publisher, 23, Chauringhi Road, Calcutta.	
Rájendra Náth Sen; Upendra Bhúshan Chaudhuri.	„ 25	Dy. 12mo; 144	1st; 2,000	P.	0 6 0	The author, 88-1, Keránibágán East Lane, Calcutta.	

1 Serial number.	2 Registration number.	Title, with an English translation of the same when not in that language, the language of the book, and the subject.	4 Name of author, translator, or editor of the book, or any part of it.	5 Place of printing and publication.
		BENGALI BOOKS—contd.		
		FICTION—*contd.*		
321	629	Parvatavásiní. A Woman living on a Mountain.	Nagendra Náth Gupta	48, Grey Street, Calcutta ...
322	634	Prem Unmádiní Upanyás. The Story of a Woman driven mad by Love.	Surendra Mohan Bhattácháryya ...	333, Upper Chitpur Road; 45, Nimugosvámi's Lane; Calcutta ... ...
323	672	Tápasa Kumár. Son of an Ascetic ...	Yogíndra Náth Chatterji... ...	133, Masjidbárí Street; 78-2, Báránasí Ghosh's Street; Calcutta.
324	441	Dasakumár Charit. Life of Ten Princes (T).	Panchánan Tarkaratna	38-2, Bhaváni Charan Datta's Street, Calcutta.
325	174	Naní Gopál. (A Name)	Nakulesvar Basu	The Bengal Press, Dacca ... ...
		HISTORY (INCLUDING GEOGRAPHY).		
326	354	Sipáhi Yudher Itihás. The History of the Sepoy War. Part V.	Rajaní Kánta Gupta	64, Akhil Mistri's Lane; 30, Cornwallis Street; Calcutta.
327	657	Khánturár Itihás O Kusadvípa Káhiní, History of Khánturá (the name of a place) and an Account of Kusadvípa.	Vipin Vihárí Chakravartí ..	25 Syámpukur Street; 153-1, Cotton Street; Calcutta.
		Educational—		
328	360	Bháratavarsher Itihás. History of India ...	Rames Chandra Datta	2, Goábágán Street; 20, Cornwallis Street; Calcutta.
329	480	Bháratavarsher Samkshipta Itihás. A Brief History of India.	Manmatha Náth Vidyáratna and Isán Chandra Ghosh.	46 Bechu Chatterji's Street; 30, Cornwallis Street; Calcutta.
330	538	Prathama Sikshá Vángálár Itihás. History of Bengal for Beginners.	Ráj Krishna Mukherji	Ditto ditto ... ...
331	545	Bháratavarsher Itihás. History of India ...	Mahámahopádhyáy Nílamani Mukhopádhyáy.	3-4, Gaur Mohan Mukherji's Street, Calcutta.
332	327	Bhúgol Sopán. Stepping-stone to Geography	Dváraká Náth Sarkár	211, Cornwallis Street; 64, College Street; Calcutta?
333	361	Bhúgol Vivaran. Geography	Táriní Charan Chatterji	2, Goábagán Street; 30, Cornwallis Street; Calcutta.
		LANGUAGE.		
		Educational—		
334	315	Jnánánkur. Germ of Knowledge. Part I ...	Ráy Navín Krishna Banerji ...	46, Bechu Chatterji's Street; 30, Cornwallis Street; Calcutta.
335	555	Pratham Níti Pustak. First Book of Morals.	Chandra Náth Basu, M.A., B.L. ...	46, Bechu Chatterji's Street; 201, Cornwallis Street; Calcutta.
336	564	Nimna Páth. The Lower Reader ...	Ditto	46, Bechu Chatterji's Street; 30, Cornwallis Street; Calcutta.
337	551	Sáhitya Mukul. Blossoms of Literature ...	Hari Charan Banerji, F.R.G.S. ...	Ditto ditto ...
338	552	Nútan Sisu Páth. New Lessons for Children	Isán Chandra Ghosh, M.A. ...	46, Bechu Chatterji's Street, Calcutta ...
339	556	Sachitra Hitopades. Good Instruction with Illustrations. Part I.	Ditto	46, Bechu Chatterji's Street; 30, Cornwallis Street; Calcutta.
340	650	Vijnán Bodh. Knowledge of Science ...	Kánái Lál De, Ráy Báhádur, C.I.E., F.C.S., and Trailokya Nath Mukherji, F.L.S.	46, Bechu Chatterji's Street; 63, College Street; Calcutta.
341	553	Pratham Sikshá. Primary Instruction ...	Trailokya Náth Mukherji, F.L.S. ...	46, Bechu Chatterji's Street, Calcutta...
342	264	Saral Páth. Easy Reader. Part I, ...	Jagadbandhu Moduk	46, Bechu Chatterji's Street; 30, Cornwallis Street; Calcutta.
343	263	Ditto ditto. Part III ...	Ditto	Ditto ditto ...
344	640	Sáhitya Ratna. Jewels of Literature ...	Sakti Prasanna Son Gupta ...	107, Bow Bázár Street, Calcutta; Somrá, Hugli.
345	218	Bodhasár Vyákaran. Grammar giving the Essence of Knowledge.	Mahámahopádhyáy Nílamani Mukherji, Nyáyalankár, M.A., B.L.	3-4, Gaur Mohan Mukherji's Street, Calcutta.
346	386	Nítimanjarí. Blossoms of Morals ...	Ditto	3-4, Gaur Mohan Mukherji's Street; Niyogípukur West Lane, Táltalá; Calcutta.
347	590	Vángálá Vyákaran. Bengali Grammar ...	Lohárám Siroratna	3-4, Gaur Mohan Mukherji's Street; 201, Cornwallis Street; Calcutta.
348	382	Subjects of Examination in the Bengali Language Appointed by the Syndicate of the Calcutta University for the Entrance Examination.	Srís Chandra Chaudhurí.	45, Benetolá Lane; 54, College Street; Calcutta.
349	309	Sandarbha Kusum. Flowers of Discourses...	Srípati Kaviratna and Pramatha Náth Kavyatírtha.	45-4, Benetolá Lane; 29, Canning Street; Calcutta.
350	655	Bodhasár Vyákaranam. Grammar giving the Essence of Knowledge.	Mahámahopádhyáy Nílamani Mukherji, M.A., B.L.	92-4, Ján Bázár Street; 26, Niyogípukur West Lane; Calcutta.
351	611	Hita Kathá. Good Words	Sasibhúshan Son	62, Amherst Street; 30, Cornwallis Street, Calcutta.
352	312	Sukha Páth. Easy Lessons	Krishna Kumár Mitra .	6, College Square, Calcutta ... ...
353	298	Sáhitya Darpan. Mirror of Literature. Part I.	Nrisinha Rám Mukherji ...	17, Nanda Kúmár Chaudhuri's 2nd Lane; 46, Bechú Chatterji's Street; Calcutta.
354	295	Sahitya Páth. Study of Literature ...	Rádhá Govinda Gángulí	17, Nanda Kumár Chaudhuri's 2nd Lane; 30, Cornwallis Street; Calcutta.
355	296	Ditto ditto. Part I. ...	Ditto	Ditto ditto
356	305	Válmíki Pratibhá. Genius of Válmíki ...	Ditto	17, Nanda Kumár Chaudhuri's 2nd Lane; Cornwallis Street; Calcutta.
357	293	Chhátra Sikshá. Instruction for Students...	Sasibhúshan Son	30, Ditto; ditto
358	588	Sisu Sikshá Vángálá Vyákaran. Bengali Grammar for the Instruction of Children.	Viresvar Pándo...	20-1 Sukea's Street; 30, Cornwallis Street; Calcutta.
359	240	Sáhitya Kaumudí. Moonlight of Literature	Náráyan Chandra Vidyáratna ...	62, Amherst Street; 30, Cornwallis Street; Calcutta.
360	387	Jnána Vikás. Expansion of Knowledge ...	Paramesvar Bhattácháryya ...	3-4, Gaur Mohan Mukherji's Street; 25, Cornwallis Street; Calcutta.

Second Quarter ending 30th June 1902—continued.

6	7	8	9	10	11	12	13
Name or firm of printer and of publisher.	Date of issue from the press or of the publication	Size and number of sheets, leaves, or pages.	Number of edition and number of copies of which the edition consists.	Printed or litho'd	Price at which the book is sold to the public.	Name and residence of the proprietor of copyright, or any part of it.	Copyright registered or not
	1902				Rs. A. P.		
Rákhál Chandra Ghosh ...	Apl. 7	D.fc.16mo; 218	2nd; 500	P.	1 4 0	The author, 48, Grey Street, Calcutta.	
Sailendra Kumár Sil; Satyendra Kumár Sil and Narendra Kumár Sil.	Mar. 22	Dy. 12mo; 162	1st; 2,000	P.	0 8 0	Satyendra Kumár Sil, 15, Nimu-Gosvámi's Lane and Narendra Kumár Sil, 57-1, Ahiritolá Street, Calcutta.	
Yogendra Náth Chakravartí; Rámeśvar Dás Kundu.	Apl. 18	Dy.12 mo; 168	2nd; 1,000	P.	1 0 0	The publisher, 78-2 Báránasi Ghosh's Street, Calcutta.	
Arunoday Ráy	Mar. 1	Cr. 8vo; 162	1st; 20,000	P.	0 8 0	The Vangavásí Firm, 38-2, Bhaváni Charan Datta's Street, Calcutta.	
Madan Mohan Basák; the author	May 29	Dy. 12mo; 22	1st; 400	P.	0 2 0	.....	
Haridás Ghosh; the Sanskrit Press Depository.	Feb. 20	Dy. 8vo; 455	1st; 1,000	P.	2 8 0	The author, 28-16, Akhil Mistri's Lane, Calcutta.	
Giris Chandra Ghosh; Anukul Chandra Banerji.	Mar. 24	Dy. 8vo; 360	1st; 500	P.	3 0 0	Durgá Charan Rakshit, 153-1, Cotton Street, Calcutta.	
Kunja Vihárí Dás; Gurudás Chatterji.	Feb. 8	Dy. 12mo; 294	13th; 1000	P.	0 10 0	The publisher, 201, Cornwallis Street, Calcutta	
R. Datta; Jadu Náth Mukherji ...	Mar. 17	Dy. 12mo. 324	11th; 2,050	P.	1 0 0	The authors, Calcutta.	
Ditto ditto ...	„ 25	D.cr. 16mo; 96	65th; 8,000	P.	0 4 0	Kshetra Mohan Mukherji, Calcutta.	
R. Páin	„ 15	Dy. 16mo; 213	11th; 2,000	P.	0 10 0	The author, 26, Niyogípukur West lane, Calcutta.	
Kárttik Charan Datta; the City Book Society.	Jan. 30	D.cr. 16mo; 48	3rd; 2,000	P.	0 2 0	Syámá Charan De, Nanda Kumár Chaudhuri's Lane, Calcutta.	
Kunja Vihárí Dás; the Sanskrit Press Depository.	Feb. 20	Dy. 12mo; 268	35th; 2,000	P.	0 12 0	Asviní Kumár Chatterji, 79-1, Muchhuábázár Street, Calcutta.	
R. Datta; the Sanskrit Press Depository.	Feb. 15	Dy. 12mo; 138	6th; 2,000	P.	0 5 0	The grandsons of the author, Bhawanipore.	
R. Datta; Guru Dás Chatterji ...	Mar. 19	D.cr. 16mo; 78	5th; 2,000	P.	0 4 0	The author, Calcutta.	
R. Datta; Yadú Náth Mukherji ...	„ 22	D.cr. 16mo; 56	6th; 20,000	P.	0 2 6	Ditto.	
Ditto Ditto ...	„ 22	D. cr.16mo; 72	1st; 50	P.	...	Ditto.	
R. Datta; P. Mukherji and Sons....	„ 22	D. cr.16mo; 28	1st; 50	P.	...	Ditto.	
R. Datta; Yadu Náth Mukherji ...	„ 25	D. cr.16mo; 65	Revised; 10,500	P.	0 3 0	Ditto.	
R. Datta; G. N. Háldár ...	Apl. 15	D. cr.16mo; 106	10th; 20,000	P.	0 3 0	Priya Lál De and Trailokya Náth Mukherji, Calcutta.	
R. Datta; P. Mukherji and Sons ...	Mar. 24	Dy. 12 mo; 30	1st; 100	P.	...	The author, Calcutta.	
R. Datta; Yadu Náth Mukherji ...	Jan. 23	Dy. 12 mo; 24	11th; 1,000	P.	0 1 6	Ditto.	
Ditto Ditto ...	„ 23	Dy. 12 mo; 24	11th; 1,000	P.	0 1 0	Ditto.	
Mihir Chandra Ghosh; the author...	Mar. 14	Cr. 16 mo; 84	1st; 500	P.	0 4 0	The author, Somrá, Hugli.	
R. Páin;	Jan. 14	Dy. 12 mo; 64	12th; 2,000	P.	0 3 0	The author, 26, Niyogípukur West Lane, Calcutta.	
R. Páin; the author	Feb. 21	Dy. 12 mo; 131	2nd; 1,000	P.	0 8 0	Ditto ditto.	
R. Páin; Guru Dás Chatterji ...	Mar. 11	Dy. 12 mo; 210	32nd; 1,000	P.	0 12 0	Lalit Mohan Banerji, 201, Cornwallis Street, Calcutta.	
Sasibhúshan Chakravartí; S. K. Láhirí & Co.	Feb. 24	D.cr. 16mo; 139	2nd; 1,000	P.	1 8 0	The University of Calcutta.	
Devendra Náth Nandi; S. K. Náth & Co.	„ 11	Dy. 12mo; 111	3rd; 1,000	P.	0 6 0	Sripati Kaviratna, 96, Russa Road, Bhawanipur.	
Amviká Charan Jáná; the author...	Mar. 15	Dy. 12mo; 48	13th; 2,000	P.	...	The author, Calcutta.	
Upendra Náth Chakravartí; the Sanskrit Press Depository.	„ 16	Dy. 12mo; 175	2nd; 1,000	P.	0 8 0	The author, Arrah.	
Niváran Chandra Ghosh ...	Feb. 10	Dy. 8vo; 68	5th; 1,000	P.	0 5 0	The author.	
Sarat Chandra Chakravartí; P. Mukherji & Sons.	Jan. 1	D.cr. 16mo; 76	1st; 25	P.	...	Ditto.	
Sarat Chandra Chakravartí; the Sanskrit Press Depository.	„ 1	D.cr.16mo; 208	1st; 50	P.	...	The author. 26, Haritakibágán Lane, Calcutta.	
Ditto ditto	„ 1	D.cr. 16mo; 74	1st; 25	P.	...	Ditto. ditto.	
S. C. Chakravartí; the Siddheśvar Press Depository.	„ 30	D.cr. 16mo; 127	4th; 2,000	P.	0 8 0	Ditto. ditto.	
S. C. Chakravartí; the Sanskrit Press Depository.	„ 1	D.cr. 16mo; 74	1st; 25	P.	...	The author, Haritakibágán, Calcutta.	
Gopál Chandra Ráy; the Sanskrit Press Depository.	Mar. 10	Dy. 12mo; 54	5th; 1,000	P.	0 2 6	The author, 27-2 Cornwallis Street, Calcutta.	
Upendra Nath Chakravartí; the Sanskrit Press Depository.	Jan. 6	Dy. 12mo; 150	1st; 500	P.	0 6 0	The author, the Vidyáságar House, Calcutta.	
R. Páin; B. Banerji & Co. ...	Feb. 22	D. cr. 16mo; 73	1st; 300	P.	0 6 0	The author, 25, Cornwallis Street, Calcutta,	

1 Serial number.	2 Registration number.	3 Title, with an English translation of the same when not in that language, the language of the book, and the subject.	4 Name of author, translator, or editor of the book, or any part of it.	5 Place of printing and publication.
		BENGALI BOOKS.		
		LANGUAGE—*contd.*		
361	443	Varnávritti. Reading of the Alphabet, Part I.	Kálikes Banerji	98, Harrison Road, Calcutta; Nadia ...
362	343	Vimala Páth. Good Lessons, Part II ...	Amar Chandra Datta ...	25, Scott's Lane, Calcutta ... ...
363	495	Sukhabodh Vyákaran. A Grammar easy to understand.	Srínáth Chanda	Ditto ... ...
364	599	Sukha Páth. Good Lessons, Part I ...	Yádav Chandra Gosvámí ...	2, Goábágán Street; 30, Cornwallis Street; Calcutta.
365	279	Pratham Pustak. First Book	Ramee Chandra Basu ...	29, Charak Dángá Street, Calcutta; 18, Madhusúdan Visvás's Lane, Howrah.
366	161	Sisusikshá. Infant-Instructor, Part I ...	Madan Mohan Tarkálankár ...	Dacca ... ...
367	163	Navín Khelá Sisu-Táns. New Playing Cards for children.	Navín Chandra Bhadra... ...	Do. ... ...
368	110	Bálya Sikshá. Instruction for childhood ...	...	Do. ... ...
369	171	Ditto. Ditto ..	Ráma Chandra Basu	Do. ... ...
370	172	Ditto. Ditto ...	...	Do. ... ...
371	113	Sisu Prayee. Introductory Lessons for Children.	Prasanna Chandra Vidyáratna ...	Do. ... ...
372	154	Bhiktoriyá Charita. Life of Queen Victoria	Kámákhyá Charan Banerji ...	Do. ... ...
373	324	Ádarsa Kavitár Sarulártha. An Easy Key to Ádarsa Kavitá.	Dvijendra Náth Dev	5, Nílamádhav Sen's Lane; 64, College Street; Calcutta.
374	227	Bodhavikás Bodhiní. A Key to Bodhavikás	Hari Charan Bhattáchárayya ...	98, Harrison Road, Calcutta; Lauhajangha, Dacca.
375	291	Prakriti Prabandher Saral Vyákhyá. An Easy Key to Prakriti Prabandha.	Surendra Nath Banerji, B. A., Vidyánidhi.	30-5, Madan Mitra's Lane; 64, College Street; Calcutta.
376	349	Sisu Ranjaner Saral Vyákhyá. An Easy Key to Sisuranjan.	Ditto ditto ...	Ditto ditto ...
377	336	Sáhitya Prasúna Bodhiká. A Key to Sáhitya Prasúna.	Asutosh Dev	22-2, Jhámápukur Lane, Calcutta ...
378	358	Páthamálá Sakhá. A Companion to Pátha málá Part I.	Nikunja Vihárí Máiti	37, Harrison Road, Calcutta; Ganespur;
379	306	Dvitíyabhág Parimala Páther Visada Vyákhya. An Easy Key to Parimala Páth, Part II.	Yogendra Náth Vidyáratna ...	40, Champátalá Lane; 9, Cornwallis Street; Calcutta.
380	313	Válmíki Pratibhár Visad Vyákhyá. An Easy Key to Válmíki Pratibhá.	Tárá Náth Vidyáratna	40, Champátalá Lane; 97, College Street, Calcutta.
381	430	Vijnán Bodha Pravesiká. A Key to Vijnán Bodh.	G. N. Háldár	114, Amherst Street; 63, College Street; Calcutta.
382	457	Dvitíyabhág Kavitámanjarír Saral Vyákhyá. An Easy Key to Kavitámanjarí, Part II.	Surendra Náth Banerji, B. A., Vidyánidhi.	10, Sambu Chatterji's Street; 64, College Street; Calcutta.
383	522	Sukha Páther Saral Vyákhyá. An Easy Key to Sukha Páth.	Siva Náráyan Vidyábágís ...	51-2, Sukea's Street; 11-5-1, Rám Krishna Dás's Lane; Calcutta.
384	475	Kávya Kaláp Mukur. A Key to Kávya Kaláp.	Visvesvar Son Gupta	107, Cornwallis Street; 63, College Street; Calcutta.
385	586	Hitopadeser Saral Vyákhyá. An Easy Key to Hitopadesa	Mahendra Náth Vidyáratna ...	1, Mahendra Gosvámi's Lane; 68, College Street; Calcutta.
386	123	Amiya Kavitá Bodhiní. A Key to Amiya Kavitá.	Kunja Vihárí Nath	Dacca ... ...
387	124	Sáhitya Parichaya Dvitíyabhág Bodhiní. A Key to Sáhitya Parichaya, Part II.	Ditto	Do. ... ...
388	125	Priya Pátha Bodhiní. A Key to Priya Páth.	Ditto	Do. ... ...
389	131	Bodhavikás Bodhiní. A Key to Bodha Vikás.	Ditto	Do. ... ...
390	126	Sadbháv Manjarí Bodhini. A Key to Sadbáv Manjarí.	....	Do. ... ...
391	127	Parimal Páth Bodhiní. A Key to Parimala Páth.	Káminí Kumár De	Do. ... ...
392	129	Bálya Suhrid Bodhiní, A Key to Bálya Suhrid.	Ráma Charan Vidyánidhi ...	Do. ... ...
393	130	Bodhavikás Bodhiní, A Key to Bodhavikás.	Ditto ditto	Do. ... ...
394	140	Ditto ditto ...	Sarvesvar De	Do. ... ...
395	141	Bháva Laharí Subodhiní. A Key to Bháva Laharí.	.....	Do. ... ...
396	111	Bodhavikás Bodhiní. A Key to Bodhavikás.	.....	Do. ... ...
397	117	Varna Sikshá Pranálí Dvitíya Bháger Artha. A Key to Varna Sikshá Pranálí, Part II.	Ramee Chandra Bhattáchárayya ...	Do. ... ...
398	149	Jívan Sopán Vivriti. A Key to Jívan Sopán	Vipin Vihárí Gingulí	Do. ... ...
399	151	Bodhavikás Bodhiní, A Key to Bodhavikás.	.....	Do. ... ...
400	152	Saral Kavitá Bodhiní, A Key to Saral Kavitá.	Sarat Chandra Datta	Do. ... ...
401	153	Níti Gáthá Bodhini, A Key to Níti Gáthá, Part I.	Ditto	Do. ... ...
		MEDICINE.		
402	460	Mushtiyoga Sár Sangraha. A Collection of the Essence of *Mushtiyoga Remedies*. (N).	Vipin Vihárí Gupta	323; 106; Upper Chitpur Road; Calcutta.
403	290	Dáktári Sikshá. Instruction in Allopathy Part I. (E).	S. N. Sen	4, William's Lane; the Oriental Science Association, Calcutta.
404	164	Suprápyáthi. Suprapathy (E.)	Púrna Chandra Sen	The Gopínath Press, Dacca ...
405	616	Strí-chikitsá. Treatment of Females. (E.)...	Vipin Chandra Maitra	70, Kalutolá Street; 45 to 49, College Street; Calcutta.

Second Quarter ending 30th June 1902—continued.

6	7	8	9	10	11	12	13
Name or firm of printer and of publisher.	Date of issue from the press or of the publication	Size and number of sheets, leaves, or pages.	Number of edition and number of copies of which the edition consists.	Printed or litho'd.	Price at which the book is sold to the public.	Name and residence of the proprietor of copyright, or any part of it.	Copyright registered or not.
	1902						
Kunja Vihárí De; the author ...	Feb. 28	D.cr. 16mo; 27	1st; 1,000	P.	0 1 0	The author, Nadia.	
Sányál & Co.	„ 4	D.cr. 16mo; 72	1st; 100	P.	...	The author, Mymensingh.	
Ditto	„ 26	D.cr. 16mo; 48	16th; rev. 2,000	P.	0 8 0	Ditto.	
Kunja Vihárí Dás; the Sanskrit Press Depository.	Mar. 25 1900.	Dy. 12mo; 47	17th; 3,000	P.	0 2 0	The author, Pabna.	
Vipin Vihárí Basák; Girís Chandra Basu.	Dec. 2	Dy. 12mo; 24	1st; 1,000	P.	0 1 0	The author, 17, Madhusúdan Visvás's Lane, Howrah.	
Gopí Náth Basák; Mani Mohan Sáhá.	May 12	Dy. 12mo; 22	65th; 1,000	P.	0 1 0	.....	
Gopináth Basák; the author ...	„ 25	Dy. 12mo; 8	1st; 500	P.	0 0 3	.....	
Gopí Nath Basák; Rám Charan Basák.	Mar. 15	Dy. 12mo; 60	4th; 1,000	P.	0 1 6	.....	
Lachhman Basák; Sítá Náth Pál...	May 15	Dy. 12mo; 48	4th; 4,000	P.	0 1 6	.....	
Lachhman Basák; Madhusúdan Dás	„ 15	Dy. 12mo; 56	28th; 4,000	P.	0 1 6	.....	
Bhánu Chandra Dás; the author ...	Mar. 6	Dy. 12mo; 57	25th; 2,000	P.	0 3 6	.....	
Sarat Chandra Guha; the author ...	April 15	Dy. 12mo; 73	1st; 2,000	P.	0 4 0	.....	
Asutosh Ghoshál; Hari Dás Dev ...	Feb. 7	Dy. 12mo; 103	2nd; and rev. 1,000	P.	0 6 0	Haridas Dev, 64, College Street, Calcutta.	
Kunja Vihárí Dev; Niváran Chandra Bhattácháryya.	Jan. 9	Dy. 12mo; 56	1st; 1,000	P.	0 6 0	The author, Dacca.	
Bhút Náth Páhit; the Garíb Library	Feb. 10	Dy. 12mo; 142	1st; 1,000	P.	0 8 0	The Garíb Library, 64, College Street, Calcutta.	
Ditto ditto ...	„ 12	Dy. 12mo; 46	1st; 1,000	P.	0 4 0	Avalá Kánta Sen; 64, College Street, Calcutta.	
Varadá Prasád Majumdár; the author.	Jan. 28	12mo; 204	1st; 1,000	P.	0 10 0	Varadá Prasád Majumdár, 22-2, Jhámápukur Lane, Calcutta.	
Sarat Chandra Háldár; Akhil Chandra Mánná.	„ 28	Dy. 12mo; 26	1st; 1,000	P.	0 3 0	The author, Ganespur.	
Káli Prasanna Datta; Upendra Kumár Ghosh.	„ 20	Dy. 12mo; 168	1st; 1,000	P.	0 14 0	The publisher, 9, Cornwallis Street, Calcutta.	
Kálí Prasanna Datta; Hrishikes Mandal.	„ 26	Dy. 12mo; 184	1st; 1,000	P.	0 12 0	The publisher, 97, College Street, Calcutta.	
Gopál Chandra Niyogí; G. N. Háldár.	Feb. 16	Dy. 12mo; 72	1st; 1,000	P.	0 6 0	The author.	
U. Rakshit; the Garíb Library ...	„ 25	Dy. 12mo; 156	2nd; 1,000	P.	0 8 0	The Garíb Library; 64, College Street, Calcutta.	
Hari Charan De; H. C. Chatterji	Mar. 12	Dy. 12mo; 72	1st; 1,000	P.	0 6 0	....	
Yadu Náth Sil; Vrajendra Naráyan De.	Feb. 22	Dy. 12mo; 146	1st; 1,000	P.	0 12 0	The publisher, 68, College Street, Calcutta.	
Naphar Chandra Sarkár; Mánik Lál De.	Mar. 20	Dy. 12mo; 47	1st; 3,000	P.	0 3 0	The publisher, 68, College Street, Calcutta.	
Oáhedbaks Sarkár; the Dacca Ripon Library.	„ 12	Dy. 12mo; 36	1st; 1,000	P.	0 6 0	.....	
Oáhedbaks Sarkár; Káminí Kumár De.	„ 12	Dy. 12mo; 34	1st; 750	P.	0 6 0	.....	
Oáhedbaks Sarkár; the Dacca Ripon Library.	„ 12	Dy. 12mo; 36	2nd; 500	P.	0 6 0	.....	
Oáhedbaks Sarkár; Jánakí Náth Náth	April 3	Dy. 12mo; 122	5th; 2,000	P.	0 10 0	.....	
Oáhedbaks Sarkár; Káminí Kumár Datta.	Mar. 16	Dy. 12mo; 156	1st; 1,000	P.	0 14 0	.....	
Oáhedbaks Sarkár; the Ripon Library.	„ 16	Dy. 12mo; 36	1st; 750	P.	0 6 0	.....	
Oáhedbaks Sarkár; Sudhánsu Ranjan Pál.	„ 19	Dy. 12mo; 144	1st; 800	P	0 12 0	.....	
Ditto ditto ...	„ 19	Dy. 12mo; 50	5th; 1,000	P.	0 5 0	.....	
Lachhman Basák; Dváraká Náth Pál.	Apl. 5	Dy. 12mo; 108	4th; 2,000	P.	0 8 0	.....	
Lachhman Basák; Chintá Haran Mukherji.	„ 5	Dy. 12mo; 96	1st; 500	P.	.... .	.....	
Gopináth Basák; Vaikuntha Chandra Sinha.	Mar. 15	Dy. 12mo; 108	4th; 2,000	P.	0 8 0	.....	
Nanda Kisor Basák; Jay Chánd Pál.	„ 5	Dy. 12mo; 26	1st; 1,000	P.	0 2 0	.....	
Revatí Mohan Dás; the Asutosh Library.	May 8	Dy. 12mo; 210	2nd; 500	P.	0 14 0	.....	
Sarat Chandra Guha; Vení Mádhav Ráy Chaudharí.	.....	Dy. 12mo; 53	3rd; 1,000	P.	0 3 0	.....	
Sarat Chandra Guha; Vení Mádhav Ghosh Chaudhurí.	May 16	Dy. 12mo; 32	3rd; 2,000	P.	0 2 6	.....	
Sarat Chandra Guha; Sarat Chandra Datta.	April 23	Dy. 12mo; 61	1st; 1,000	P.	0 4 0	.....	
	1902.						
Nrisinha Kumár Ghosh; Panchánan Ghosh.	Feb. 28	Dy. 12mo; 107	1st; 1,000	P.	0 3 0	The publisher, 106, Upper Chitpur Road, Calcutta.	
Amrita Lál Ghosh; the Oriental Science Association.	Jan 6	Dy. 12mo; 24	1st; 500	P.	0 4 0	The author, the Oriental Science Association, Calcutta.	
Gopináth Basák; Púrna Chandra Sen.	May 25	Dy. 12mo; 72	1st; 1,000	P.	0 4 0	.....	
Hari Dás Banerji; Maitra & Co ...	Mar. 29	Dy. 8vo; 110	1st; 500	P.	1 4 0	The author, 45 to 49 College Street, Calcutta.	

1 Serial number.	2 Registration number.	3 Title, with an English translation of the same when not in that language, the language of the book, and the subject.	4 Name of author, translator, or editor or the book, or any part of it.	5 Place of printing and publication.
		BENGALI BOOKS—contd.		
		MISCELLANEOUS.		
406	...	Ajgubi Galpa. Strange Stories	Braja Sundar Sányál	The Samiti Press, Rájsahi ...
407	1	Utsava Sangit. Festive Songs ...	Sáradá Charan Chakravartí ...	The Kásipur Press, Barisal ...
408	1	Yugakál Vichár. Discussion of the Period of Yuga (age).	Priya Nath Karár	Serampur ... ...
409	2	Navín Vilap. Lamentation by Navín (a name). Part I.	Navín Chandra Sarkár... ...	The Tamoghna Press; Boalia ...
410	25	Vividha Galpa. Miscellaneous Stories ...	Haranáth Basu	The Pratijná Press, Kálighát; Calcutta
411	118	Párisánár Gít. Songs in the Drama of Párísána.	.....	Dacca ... ...
412	168	Tomári O'Abul Kásemer Gít. Songs in the Dramas of Tomári and Abul Kásem.	Praphulla Chandra Mukherji and Satís Chandra Banerji.	Do. ... ...
413	245	Samáj-Tattva. Social Truths ...	Púrna Chandra Basu	2, Goábágán Street; 201, Cornwallis Street; Calcutta.
414	323	Ke Kár Vá Unmádinír Pralap. Who belongs to Whom? or the Ravings of a mad woman.	Hari Dás Banerji	20-1, Sukea's Street; 52, Suri's Tank Path Lane; Calcutta.
415	344	Vangadesastha Hindu Samáj O Prachalita Sikshá Pranálír Sanskár. The Hindu Society of Bengal and the Reform of the existing System of Education.	Brajalál Chakravartí	25-1, Scott's Lane; Calcutta ...
416	527	Yuvatí Jívan. Life of a Young Woman ...	Vipradás Mukherji	2, Goábágán Street; 201, Cornwallis Streeet; Calcutta.
417	537	Ashárbe Galpa. Strange Stories ...	Hemendra Prasád Ghosh	98, Harrison Road; 15, Sarkár's Lane; Calcutta.
418	520	Dayánanda Hindur Adarsa Sanskárak. Dayánanda, the Model Hindu Reformer.	Devendra Náth Mukherji ...	51-2, Sukea's Street; Calcutta ...
419	458	Atasvájí Vá Kautuk Darpan. Fireworks or the Mirror of Fun.	.....	323; 106; Upper Chitpur Road, Calcutta
420	607	Nisítha Chintá. "Midnight Meditations." (T)	.....	4, Rájá Nava Krishna's Street, Calcutta.
421	620	Bauddha Dharmánkur Sabhár Káryya Vivaraní. The Report of the Association of Bauddha Dharmánkur (the Germ of Buddhism).	Kripá Saran Bhikshu	98, Harrison Road, Calcutta ...
422	535	Navayuger Nava Sannyás. The New Renunciation of a New Era.	Rev. G. G. Ráy	3, Ramánáth Majumdár's Street, Calcutta.
		Educational.		
423	224	Patra Daliládir Adarsa Pustak. "Samples of Letters, Deeds, &c." Part I.	Súryya Kumár Adhikári ...	98 Harrison Road; 25 Cornwallis Street; Calcutta.
424	225	Ditto Ditto	Ditto ...	Ditto ditto ...
		PHILOSOPHY.		
425	229	Bábu Srígopál Basu Malliker Phelosiper Lekchár. Srígopál Basu Mallik's Fellowship Lectures. 4th year.	Mahámahopádhyáy Chandra Kánta Tarkálankár.	98, Harrison Road, Calcutta ...
426	581	Jnána Yoga. A System of Concentration of the Mind obtained through Knowledge.	Svámí Vivekánanda	14, Rámachandra Maitra's Lane, Calcutta.
427	685	Práchín O Navín Yoga. Yoga (A System of Concentration of the mind), Ancient and Modern.	Rev. Gaur Govínda Ráy Upádhyáy	3, Ramánáth Majumdár's Street, Calcutta.
		POETRY.		
428	2	Bhakti Gáthá. Songs of Devotion ...	Matilál Ghoshál	The Vikás Machine Printing Works, Barisal.
429	4	Alekhya Chapalá. Pictured Chapalá (a Name)	Rámachandra Bhattácháryya ...	The Sánti Press, Mádáripur ...
430	5	Viváha Upahár Vá Bidhu Sudhá Parinay. A Marriage Present or the Marriage of Bidhu and Sudhá.	.....	The Upen Press, Comilla ... ...
431	6	Amarávatír Vasanta Utsava. The Spring Festival in Heaven.	Manomohan Sen	The Vásantí Press, Mymensinha ...
432	133	Rájabhakti. Loyalty	Krishna Mohan Dhar	The Asutosh Press; Maulví Bázár; Dacca.
433	38	Munjarí. "Flowers of the Tulasí Plant" ...	Srímatí Vasanta Kumarí Devi ...	10, Kedárnáth Basu's Lane, Bhawanipur, 201; Cornwallis Street; Calcutta.
434	142	Naváb Kírtti. Fame of a Nawab ...	Kunja Mohan Chakravartí ...	The Vedavyás Press, Dacca ... ...
435	167	Kusum. Flowers	Anáth Bandhu Ráy	The Genderiyá Press, Dacca ... ...
436	201	Avakás Laharí. Waves of (Poetry to beguile) Leisure.	Pramatha Náth Mallik	66, Ahíritolá Street, Calcutta... ...
437	228	Kavitá. Poems	Satís Chandra Sen Gupta ...	98, Harrison Road, Calcutta .. ..
438	367	Yoga Prabhá. (A Name)	Rái Kisorí Munsi	31, Harrison Road, Calcutta; Rangpur.
439	485	Asruhár. Garland of Tears	.....	33-1, Patuátolá Lane; 201, Cornwallis Street; Calcutta.

Second Quarter ending 30th June 1902—continued.

6	7	8	9	10	11	12	13
Name or firm of printer and of publisher.	Date of issue from the press or of the publication	Size and number of sheets, leaves, or pages.	Number of edition and number of copies of which the edition consists.	Printed or litho'd.	Price at which the book is sold to the public.	Name and residence of the proprietor of copyright, or any part of it.	Copyright registered or not
	1902						
Nikunja Vihárí Chaudhurí	June 14	Dy. 16mo; 64	1st; 500	P.	0 6 0	The author, Rajsahi.	
Tarini Charan Dás; Bámá Charan Dás.	Mar. 10	Dy. 12mo; 61	1st; 300	P.	...	"	
Mahendra Náth Banerji .	May 28	Rl 16mo; 12	1st; 1,000	P.	0 2 0	The author, Serampur.	
Mahammad Sákeruddin Sarkár; Aminuddin Prámánik.	Apl. 25	Dy. 8vo; 42	1st; 1,000	P.	.....	The author.	
Kálímohan Bhattácháryya; Yadunáth Basu.	" 17	Dy. 8vo; 160	1st; 1,000	P.	1 0 0	The publisher, 23-1-3, Tálíganj Road, Calcutta.	
Nanda Kisor Basák ..	Mar. 5	Dy. 12mo; 10	1st; 800	P.	0 0 6	...	
Bhánu Chandra Dás; K K Das	May 3	Dy. 12mo; 12	1st; 1.000	P.	0 0 6	..	
Kunja Vihárí Dás; Gurudás Chatterji.	Jan. 26	Dy. 12mo; 275	1st; 500	P.	1 4 0	The author, 13 2-1, Vrindávan Basu's Lane, Calcutta.	
Gopál Chandra Ráy; the author	" 25	Dy. 12mo; 124	1st; 500	P.	0 8 0	The author.	
Sányál & Co.	" 26	Dy. 8vo; 16	1st; 1,000	P.	.....	The author, Calcutta.	
Kunja Vihárí Dás; Gurudás Chatterji.	Mar. 15	Dy. 12mo; 222	1st; 1,000	P.	1 0 0	Ditto, ditto.	
Kunja Vihárí De; Srikánta Ráy .	" 2	D.cr. 8vo; 95	1st; 2,000	P.	1 0 0	The author, 82, Sítárám Ghosh's Street, Calcutta.	
Haricharan De; the Dayánanda Samiti.	Feb 25	D.cr. 16mo, 50	1st; 500	P.	0 3 0	... ..	
Nrisinha Kumár Ghosh; Panchánan Ghosh.	Mar. 4	Dy. 12mo; 28	1st; 1,000	P.	0 2 0	The publisher, 106, Upper Chitpur Road, Calcutta.	
Upendra Náth Mandal; Kálípada Mitra.	Apl. 1	Dy. 12mo; 24	1st; 500	P.	0 2 0	The publisher, Head Master Kaikálá H. E. School, Hugli.	
Kunja Vihárí De; the author .	" 1	Dy. 12mo; 40	10th; 1,000	P.	....	The author, 21-26 Bow Bázár Street, Calcutta.	
K. P. Nath; the Brahmo Mission Office.	Mar. 25	Dy. 12mo; 21	1st; 300	P.	0 2 0	The Brahmo Mission Office 3, Ramánáth Majumdár's Street, Calcutta.	
Kunja Vihári De, B. Banerji &Co.	Jan. 4	D.cr. 16mo; 20	1st; 1,000	P.	0 2 0	The author, Murshidábád.	
Ditto ditto ...	" 6	D.cr. 16mo; 68	1st; 1,000	P.	0 4 0	Ditto.	
Kunjavihárí De .	Jan. 5	Dy 8vo; 206	1st; 500	P.	2 0 0	The author, 109, Muktárám Bábu's Street, Calcutta.	
Svámí Trigunátíta	Mar. 15	Dy. 8vo; 276	1st; 500	P.	0 8 0	The publisher, 14 Ráma Chandra Maitra's Lane, Calcutta.	
K P. Náth	Apl. 19	Dy 12mo; 25	2nd; 300	P	0 2 0	The Brahmo Mission Office; 3 Ramánáth Majumdár's Street, Calcutta.	
Nivárun Chandra Chatterji	Apl. 25	Dy. 12mo; 72	1st; 1,000	P.	.	.	
Dváraká Náth Ráy ...	1901 Dec. 2	Dy. 12mo; 60	1st; ..	P	..	....	
J. K. Ráy	1902 Mar. ..	Sprl. 16mo; 45	1st; 50	P.	...	The printer.	
Ráma Chandra Ananta	" 24	Dy. 8vo; 8	1st; 1,000	P.	...	..	
Revatí Mohan Dás; Rajaní Mohan Dhar.	" 26	Dy. 12mo; 41	1st; 500	P.	..	. ..	
Baradá Prasád Banerji; Guru Das Chatterji.	May 15	Dy 12mo; 70	1st; 250	P.	0 8 0	. .	
Oáhed Baks; Bhárat Chandra Vidyáratna.	April 23	Dy. 12mo; 12	1st; 500	P.	....		
Bhánu Chandra Dás; Yadu Náth Ráy.	May 16 1901	Dy. 12mo; 94	1st; 250	P.	0 4 0		
Rájendra Náth Sen	Dec. ...	Dy. 12mo; 55	1st; 1,000	P.	0 4 0	The printer, 66, Ahíritolá Street, Calcutta.	
Kunja Vihárí De . ..	Jan. 12	D.cr. 16mo; 62	1st; 500	P.	.....	The author, 25, Marjápur Street, Calcutta.	
H. L. Sarkár; Satyendra Mohan Ráy.	Feb. 6	Dy. 12mo; 74	1st; 500	P.	.....	. ..	
H. L. Adhya; Gurudás Chatterji	Mar. 19	Fc. 8vo; 55	1st, 600	P.	0 4 0	The publisher, 201, Cornwallis Street, Calcutta.	

1 Serial number.	2 Registration number.	3 Title, with an English translation of the same when not in that language, the language of the book, and the subject.	4 Name of author, translator, or editor of the book, or any part of it.	5 Place of printing and publication.
		BENGALI BOOKS—contd.		
		POETRY—*concld.*		
440	562	Kávya Kaláp. Collection of Poems ...	Rái Krishna Mukherji	46, Bechu Chatterji's Street; 57, College Street; Calcutta.
441	594	Amiya Gáthá. Verses of Nectar ...	Srímatí Nagendrabálá Mustaphi ...	17, Nanda Kumár Chaudhuri's 2nd Lane, Calcutta.
442	628	Bhárat Uddhár. Deliverance of India ...	Rámadás Sarmá	98, Harrison Road; 20, Cornwallis Street; Calcutta.
443	696	Drishtihíne Viláp. Lamentation for Loss of Sight.	Durjyodhan Pátra	37, Harrison Road; 66, Mirzápur Street; Calcutta.
		Educational—		
444	184	Pushpahár. Garland of Flowers ...	Giris Chandra Chaudhuri ...	The Ashutosh Press, Dacca ... ...
445	148	Mánasa Kusum. Mental Flowers ...	Hem Kumár Chaudhurí	Ditto ... ...
446	292	Padya Sikshá Sár. Essence of Instruction in Poetry.	Ananda Chandra Mitra	30-5, Madan Mitra's Lane; 201, Cornwallis Street; Calcutta.
447	608	Kavitá Sár. Essence of Poetry	Ditto	Ditto ditto ... ...
448	384	Kavitámanjarí. Blossoms of Poetry. Part I	Yogendra Náth Sen	17, Madan Mitra's Lane, Calcutta .
449	325	Ádarsa Kavitá. Model Poetry	Yogíndra Náth Basu	271, Cornwallis Street; 64, College Street; Calcutta.
450	368	Kavitámanjarí. Blossoms of Poetry ...	Parikshít Chatterjí	31, Harrison Road; 47, Mirzápur Street; Calcutta.
451	528	Bhávaballí. Creeper of Thought ...	Prasanna Kumár Guha	3-4, Gaurmohan Mukherji's Street; 57-1, College Street; Calcutta.
452	549	Raghuvansa. The Dynasty of Raghu ...	Navín Chandra Dás	46, Bechu Chatterji's Street; 30, Cornwallis Street; Calcutta.
453	593	Padya Sikshá. Instruction in Poetry-Part II.	Mozammel Huq	17, Nanda Kumar Chaudhuri's 2nd Lane; 30, Cornwallis Street, Calcutta.
454	630	Níti Kusum. Flower of Morals. Part II.	Vipin Vihárí Ráy	30-5, Madan Mitra's Lane; 20, Cornwallis Street; Calcutta
455	659	Sisu Sakhá. Companion to Children ...	Narendra Krishna Tálukdár ...	221, Cornwallis Street, Calcutta ...
		RELIGION.		
456	267	Purána Sangraha Mahábhárata. A Collection of the Puránas. The Mahábhárata. Part 17. (T.) (H.)	Translated by Kálí Prasanná Sinha	147, Báránasi Ghosh's Street, Calcutta
457	268	Ditto ditto. Part 18. (T.) (H.)	Ditto ditto	Ditto ditto
458	269	Ditto ditto. Part 19. (T.) (H.)	Ditto ditto	Ditto ditto
459	375	Ditto ditto. Part 20. (T.) (H.)	Ditto ditto	4, Gúlú Ostágar's Lane, Calcutta ..
460	,,	Ditto ditto. Part 21. (T.) (H.)	Ditto ditto	Ditto ditto ...
461	374	Ditto ditto. Part 22. (T.) (H).	Ditto ditto	Ditto ditto ...
462	,,	Ditto ditto. Part 23. (T.) (H).	Ditto ditto	Ditto ditto ...
463	627	Ditto ditto. Part 24. (T) (H).	Ditto ditto	Ditto ditto ...
464	,,	Ditto ditto. Part 25. (T.) (H).	Ditto ditto	Ditto ditto ..
465	626	Ditto ditto. Part 26. (T.) (H).	Ditto ditto	Ditto ditto ..
466	,,	Ditto ditto. Part 27. (T.) (H).	Ditto ditto	Ditto ditto ...
467	352	Pada Kalpa Latiká. The Creeper of Verses that fulfils all Desires. (H.)	N. C. Sil	25-3, Tárak Chatterji's Lane; 113, Upper Chitpur Road; Calcutta.
468	393	Sankírttan. The Chanting (of the Names of God). (H.)	.....	8, Jackson's Lane, Calcutta; Rámkrishnapur, Howrah.
469	476	Mukti Sopán Vá Srí Krishner Stava. Stepping-stone to Salvation or Hymns in honour of Srikrishna (H.)	.....	107, Cornwallis Street; 18, Garpár Road, Calcutta.
470	492	Durgá Saptasatí Chandí. The Book called Chandí, containing Seven Hundred Verses in honour of the Goddess Durgá. (T.) (H).	Kunja Lál Bhúti	25-1, Scott's Lane; 90, Phear's Lane; Calcutta.
471	539	Srímadbhagavadgítá. The Divine Lay (T.) (H.)	.....	61, Ahíritolá Street; Calcutta ...
472	583	Srí Srí Ráma Krishna Kathámrita. The Nectar of the Words of Rámakrishna. (H.)	Mahendra Nath Gupta	14, Ráma Chandra Maitra's Lane, Calcutta.
473	388	Chikágo Vaktritá. Lectures at Chicago. (H.)	Svámí Vivekánanda and Ráma Krishnánanda.	Ditto ditto
474	687	Gíta Málá. Collection of Songs. (H). . .	Kshetra Mohan Sinha	2, Ananda Chatterji's Lane, Calcutta; Midnapur.
475	621	Sadbháv Sangít. Songs of Good Thought (H.)	Govinda Chandra Chaudhurí .	98, Harrison Road, Calcutta ..
476	699	Tápasa Bálá. The Ascetic Girl. (H.) ...	.. ..	98, Harrison Road, Calcutta; Kásipur...
477	676	Jaimini Bhárat The Mahábhárata by Jaimini (T.) (H.)	Kálí Prasanna Vidyáratna ..	127, Masjidbárí Street; 98-3, Upper Chitpur Road; Calcutta.
478	112	Satya Náráyaner Páncháli. Metrical Recitation in honour of the God Satya Náráyan. (H.)	Rám Dayál Banerji	Dacca . ...
479	145	Prárthaná. Prayer. (H.)	Narottam Thákur . .	Do.
480	4	Chandra Náth Prasanga. A Discourse on (the shrine of) Chandra Náth. (H.)	Jugat Chandra Bhattácháryya .	Commilla ... ...
481	6	Sánti. Peace. (H.)	Ráma Kánái Datta .. .	Brahmanberyá, Commilla ...
482	244	Brahmopásána. The Worship of Brahma (God). (B.).	Kesav Chandra Sen	78, Upper Circular Road, Calcutta ...
483	450	Mághotsaver Upades. Sermon delivered at the Mágh Festival (of the Brahmo Samaj).	Siva Nath Sástri	211; 210-6; Cornwallis Street, Calcutta.

Second Quarter ending 30th June 1902—continued.

6	7	8	9	10	11	12	13
Name or firm of printer and of publiher.	Date of issue from the press or of the publication.	Size and number of sheets, leaves, or pages.	Number of edition and number of copies of which the edition consists.	Printed or litho'd.	Price at which the book is sold to the public.	Name and residence of the proprietor of copyright, or any part of it.	Copyright registered or not.
	1902.				Rs. A. P.		
R. Datta; Brajendra Mohan Datta...	Mar. 20	Dy. 12mo; 80	4th; 2,000	P.	0 6 0	KhetraMohan Mukherji, Calcutta.	
S. C. Chakravartí	„ 25	Dy. 12mo; 240	1st; 500	P.	1 0 0	The authoress, Barát Lane, Hugli.	
Kunja Vihárí De; the Majumdár Library.	„ 22	D.fc. 16mo; 40	5th; 1,000	P.	0 4 0	The author, 20, Cornwallis Street, Calcutta.	
S. C. Háldár; the author ...	Apl. 26	D.fc. 16mo; 16	1st; 1,000	P.	.....	The author, 66, Mirzápur Street, Calcutta.	
Revatímohan Dás; Srísh Chandra Chaudhurí.	Mar. 31	Dy. 12mo; 51	3rd; 500	P.	0 4 0	.....	
Revatímohan Dás; Harirám Dhar.	Apl. 28	Dy. 12mo; 50	6th; 2,000	P.	0 4 0	.....	
Bhútnáth Pálit; Gurudás Chatterjí.	Feb. 16	Cr. 16mo; 34	5th; 1,000	P.	0 2 0	The author, Grey Street, Calcutta.	
Ditto ditto ...	Mar. 29	D. cr. 16mo; 80	14th; 1,000	P.	0 4 0	The author, 23, Rájá Nava Krishna's Street, Calcutta.	
Ramaní Mohan De; the author ...	Feb. 4	D. cr. 16mo; 44	4th; 2,000	P.	0 2 0	The author, 34, Hridárám Banerji's Lane, Calcutta.	
Kárttik Chandra Datta; the City Book Society.	Jan. 27	D. fc. 16mo; 66	3rd; 1,000	P.	0 4 0	The author, Deoghar, Baidyanáth.	
H. L. Sarkár; Kásísvar Sen Gupta.	Feb. 24	Dy. 12mo; 42	1st; 1,000	P.	0 3 0	.. .	
R. Páin; A. K. Ráy	Mar. 10	D. cr. 16mo; 96	3rd; 1,000	P.	0 8 0	The author and publisher, 57-1, College Street, Calcutta.	
R. Datta; the Sanskrit Press Depository.	„ 26	Rl. 12mo; 82	3rd; 2,000	P.	0 8 0	The author, Chittagong.	
S. C. Chakravartí; the Sanskrit Press Depository.	„ 12	D. fc. 16mo; 68	2nd; 500	P.	0 4 0	The author, Sántipur.	
Bhútnáth Pálit; Gurudás Chatterjí.	Apl. 8	D. fc. 16mo; 80	8th; 1,000	P.	0 4 0	The author, 210-1-1, Cornwallis Street, Calcutta.	
Prahlád Chandra Dás; Chandra Vinod Kundu.	„ 7	Dy. 12mo; 42	1st; 500	P.	0 3 0	The author, Tárátiyá, Lauhaganj, Dacca.	
Jagat Bandhu Dás Ghosh; the Fine Art Printing Syndicate.	Feb. 6	D.cr. 4to; 155	2nd; 1,000	P.	0 12 0	Vijay Chandra Sinha; 147, Báránasí Ghosh's Street, Calcutta.	
Ditto ditto	„ 6	D.cr. 4 to; 147	2nd; 1,000	P.	0 12 0	Ditto ditto.	
Ditto ditto	„ 27	D.cr. 4to; 158	2nd; 1,000	P.	0 12 0	Ditto ditto.	
Chúni Lál Banerji; H. D. Mánná and Co.	„ 27	Rl. 8vo; 80	New 2,000	P.	0 4 0	... ..	
Ditto ditto ...	„ 27	Rl. 8vo; 80	„ 2,000	P.	0 4 0	.....	
Ditto ditto ...	„ 27	Rl. 8vo; 80	„ 2,000	P.	0 4 0	.....	
Ditto ditto ...	„ 27	Rl. 8vo; 80	„ 2,000	P	0 4 0	.....	
Ditto ditto ...	Apl. 7	Rl. 8vo; 80	„ 2,000	P.	0 4 0	. ....	
Ditto ditto ...	„ 7	Rl. 8vo; 80	„ 2,000	P.	0 4 0	.....	
Ditto ditto ...	„ 7	Rl. 8vo; 80	„ 2,000	P.	0 4 0	.....	
Ditto ditto ...	„ 7	Rl. 8vo; 80	„ 2.000	P.	0 4 0	.....	
Hari Charan Dás; N. C. Sil ...	Feb. 4	Dy. 8vo; 116	1st; 2,000	P.	.....	N. C. Sil 25-3, Tárak Chatterji's Lane, Calcutta.	
Nanda Lál Datta; Hari Charan Mallik.	Mar. 4	Dy 8vo; 12	1st	P.	.....	Hari Charan Mallik Rámakrishnapur, Howrah.	
Yadu Nath Sil; Krishna Chandra Mukherji.	Feb. 18	Dy. 8vo; 15	1st; 1,000	P.	0 1 0	Krishna Chandra Mukherji, 18, Garpár Road, Calcutta.	
Sányál and Co.; the author ..	Mar. 10	D.fc. 16mo; 276	1st; 1,000	P.	0 12 0	The author, 9, Phear's Lane, Calcutta.	
Priya Náth Ghosh; De Brothers ...	„ 15	Dy. 8vo; 50	1st; 700	P.	0 8 0	De Brothers, 61, Ahírítolá Street, Calcutta.	
Svámí Trigunátíta	„ 11	Dy. 12mo; 394	1st; 1,000	P.	1 0 0	The author, 52, Bhawáni Charan Datta's Lane, Calcutta	
Ditto ..	„ 1	Cr. 8vo; 34	1st; 1.000	P.	0 8 0	The publisher, 14, Ráma Chandra Maitra's Lane, Calcutta.	
Kesav Lál Ráy; the author ...	Apl. 7	Dy. 12mo; 22	1st; 2,000	P.	0 1 0	The author, Pátnábazár, Midnápur.	
Kunja Vihárí De . .	Mar. 26	D.cr. 16mo; 71	2nd; 1,000	P.	0 8 0	The author, Ránághát.	
Kunja Vihárí De; Sasi Bhúshan Sarkár.	Apl. 17	Dy. 12mo; 100	1st; 500	P.	0 6 0	Susibhúshan Sarkár, Kásipúr.	
Dína Náth Mánná; Vaishnav Charan Basák.	„ 4	Rl. 8vo; 329	2nd; 1,000	P.	2 0 0	The publisher, 127, Masjidbárí Street, Calcutta.	
Gopí Náth Basák; Púrna Chandra Sinha.	Mar. 20	Dy. ... 12	1st; 2,000	P.	0 2 0	.. ..	
Mahim Chandra De; the Suddha Vaishnav Samáj.	May 7	Dy. 32mo; 64	1st; 6,000	P.	0 1 0	... .	
Yáminí Kumár Ráy; Vírendra Kumár Datta Gupta.	March	Dy. 12mo; 108	1st; 1,000	P.	0 4 0	The author.	
Sádhú Charan Chanda ...	Feb. 13	Dy. 8vo; 24	1st; 400	P.	.....	Ditto.	
Ráma Sarvasva Bhattáchárryya; the Brahmo Tract Society.	Jan. 8	Dy. 12mo. 99	New; 500	P.	.....	Karuná Charan Sen and Brothers	
Kárttik Charan Datta; the author.	Feb. 24	Dy. 12mo; 137	1st; 1,000	P.	0 8 0	The author, 210-6, Cornwallis Street, Calcutta.	

1 Serial number	2 Registration number.	3 Title, with an English translation of the same when not in that language, the language of the book, and the subject.	4 Name of author, translator, or editor of the book, or any part of it.	5 Place of printing and publication.
		BENGALI BOOKS—contd.		
		RELIGION—*concld.*		
484	258	Áchárywa Kesav Chandra. The Preceptor Kesav Chandra. Part II. (B.)	Rev. G. G. Ráy .. .	3, Ramá Náth Majumdár's Street, Calcutta.
485	259	Brahma Sangít O Sankírttan. Songs in honour of Brahma (God.) and Chanting the name of Brahma (God). (B.)	.....	Ditto ditto ...
486	378	Prabandha Kusum. Flowers of Essays. (H)	Srímatí Indirá Deví ..	Printed at 119, Old Baitakkhána Bázár Road, Calcutta.
487	22	Yisu Khrishta O Krishna. Jesus Christ and Srí Krishna. (T.) (C.)	Rev. Mathurá Náth Náth	81, Chackrabere Road; 23, Chauringhi Road; Calcutta.
488	644	Nárijátir Unnati. "The Uplifting of Woman." (C.)	Ditto .	41, Lower Circular Road; 23, Chauringhi; Calcutta.
489	589	Gunavatí Kanyá. "A Good Daughter." (C.)	Ditto	Ditto ditto ...
490	590	Kánchá Soná. "Pure Gold." (C.) ...	Ditto	Ditto ditto ...
491	643	Pánchakádi Bábu. (A Name.) (C.) ...	Ditto .	Ditto ditto ...
492	511	Stipháner Hatyá. Stephen's Murder (C.)	Rev. C. E. Wilson ...	41, Lower Circular Road, Calcutta .
493	512	Sishyagan Chhinnabhinna. Disciples Scattered. (C.)	Ditto ..	Ditto ditto ...
494	513	Kúsíyer Manah Parivarttan. Conversion of the Ethiopian.	Ditto . ..	Ditto ditto ...
495	514	Mitáchár. Temperance. (C.)	Ditto	Ditto ditto ...
496	515	Punarálochaná. Re-investigation. (C.) ...	Ditto	Ditto ditto ...
497	506	Stiphánke Prastarághát Badh Karú. The Slaying of Stephen with Stone. (C)	Rev. A. Jowson ...	Ditto ditto ...
498	507	Chhinna Bhinna Sishyagan. Disciples Scattered. (C.)	Ditto	Ditto ditto ...
499	508	Samariyerá Isvarer Vákya Grahan Kare. Samarians Receive God's Word. (C.)	Ditto	Ditto ditto ...
500	509	Videsíya Ráj Mantrí Khrishtiyán Han. The Foreign Minister becomes a Christian. (C.)	Ditto	Ditto ditto ...
501	510	Yisu Saulke Dekhá Den. Jesus Appeareth Before Saul. (C.)	Ditto	Ditto ditto ...
502	689	Yisur Náme Pitarer Káryya. Peter Acting in the name of Jesus. (C.)	Ditto	Ditto ditto ...
503	690	Pitar Romíya Senápatir Grihe. Peter in the House of the Roman Commander. (C)	Ditto	Ditto ditto ...
504	688	Saulor Man Parivarttan. Saul's Conversion (C.)	Ditto	Ditto ditto ...
505	206	Dainik Pad O Sástrapáther Táliká Saha Amáder Panjiká. 1902. Our Almanac with Index of Daily Readings and Texts for 1902. (C.)	Miss Daw	41, Lower Circular Road; 31 Free School Street; Calcutta.
506	212	Dainik Sástra Páth. Daily Readings of the Gospel. For January 1902. (C.)	Ditto	Ditto ditto ...
507	415	Ditto ditto. For February 1902. (C.)	Ditto	Ditto ditto ...
508	570	Ditto ditto. For March 1902. (C.)	Ditto	Ditto ditto .
509	409	37 Sa Upades. The 37th Sermon. (C.) ...	Rev. G. W. Olver ...	41, Lower Circular Road, Calcutta ...
510	408	38 Sa Upades. The 38th Sermon. (C.) ...	Ditto . ..	Ditto ditto ...
511	407	39 Sa Upades. The 39th Sermon. (C.) ...	Ditto	Ditto ditto ...
512	604	Yisu Khrishter Dvitíya Agamaner Lakshan. Signs of the Second Advent of Jesus. (C)	B. N. Mitra	22, Old Baitakkhána 2nd Lane; 39-1, Free School Street; Calcutta.
513	605	Agámí Rájya. The Future Kingdom. (C.)	Vaikuntha Náth De	Ditto ditto ..
514	663	Sangíta Pushpánjali. A Palmful of Flowers of Songs. (C.)	Ugra Kantha Májhi	154, Bowbazár Street, Calcutta; Boráshi, Gopálganj, Faridpur.
515	34	Dharma Vishaye Prasnottara. "The Second Catechism." Part II. (C.)	.....	81, Chackrabere Road, Báliganj; 23, Chauringhi Road,; Calcutta.
516	686	Darbesí. Relating to Dervishes (M.) ...	Rev. Giris Chandra Sen ..	3, Ramá Náth Majumdár's Street. Calcutta.
517	1	Rojá. The Fast of Ramzán. (M.) .	Maulví Makbul Ali	Comilla ... ...
		SCIENCE (MATHEMETICAL).		
		Educational—		
518	31	Pratham Sikshá Pátíganit. First Instruction in Arithmetic.	Náráyan Chandra Bhattácháryya ...	The Jewel Press, Kálighát, Bhawanipur
519	656	Sural Dhárápát. Easy Arithmetical Tables.	Mehoruddin Ahmad .	25, Syámpukur Street, Calcutta; Bogra
520	340	Mánasanka O Bájár Hisáv. Mental Arithmetic and Bázár Accounts.	Ráhát Ali Khán .	25 1, Scott's Lane, Calcutta; Dacca ...
521	380	Saral Pátíganit. Easy Arithmetic ...	P. Ghosh .. .	32-1, Malangá Lane, Calcutta ...
522	133	Nava Dhárapát. New Arithmetical Tables.	Ditto ...	Ditto ditto ...
523	680	Saral Pátíganit. Easy Arithmetic ...	Ditto	Ditto ditto ...
524	277	Pátíganit. Arithmetic. Part I ...	Tárini Kánta Majumdár .	211, Cornwallis Street, Calcutta; Suri, Birbhum.

Second Quarter ending 30th June 1902—continued.

6	7	8	9	10	11	12	13
Name or firm of printer and of publisher.	Date of issue from the press or of the publication.	Size and number of sheets, leaves, or pages.	Number of edition and number of copies of which the edition consists.	Printed or litho'd.	Price at which the book is sold to the public.	Name and residence of the proprietor of copyright, or any part of it.	Copy right registered or not.
	1902.				Rs. A. P.		
K. P. Náth	Jan. 26	Dy. 8vo; 157	1st; 500	P.	1 0 0	The Bráhmo Mission Office, 3, Ramá Náth Majúmdar's Street, Calcutta.	
Ditto	„ 26	Rl. 16mo; 1,047	New; 1,000	P.	2 0 0	Ditto ditto.	
Yadu Náth Bancrji and Sons; Amrita Lál Bhattácháryya.	Feb. 2	Dy. 12mo; 24	1st; 500	P.	.....	Srímatí Indirá Devi.	
S. C. Mukherji; the Secretary, Christian Literature Society.	Mar. 14	Dy. 12mo; 40	4th; 2,500	P.	0 1 0	The Secretary, Christian Literature Society, 23, Chauringhi, Calcutta.	
Rev. C. H. Harvey; the Christian Tract and Book Society.	„ 11	Cr. 8vo; 4	1st; 12,000	P.	.....	.....	
Ditto ditto ...	Jan. 16	Cr. 8vo; 4	1st; 12,000	P.	.....	.....	
Ditto ditto ...	„ 16	Cr. 8vo; 4	1st; 12,000	P.	.....	.....	
Ditto ditto ...	Mar. 11	Cr. 8vo; 4	1st; 12,000	P.	.....	.....	
Rev. C. H. the Harvey; the B. S. S. Union.	Feb. 21	Rl. 8vo; 2	1st; 2,200	P.	20 copies per anna.	.....	
Ditto ditto ...	„ 21	Rl. 16mo; 2	1st; 2,200	P.	20 copies per anna.	.....	
Ditto ditto ...	„ 21	Rl. 8vo; 2	1st; 2,200	P.	20 copies per anna.	.....	
Ditto ditto ...	„ 21	Rl. 8vo; 2	1st; 2,200	P.	20 copies per anna,	.....	
Ditto ditto ...	„ 21	Rl. 8vo; 2	1st; 2,200	P.	20 copies per anna.	.....	
Ditto ditto ...	„ 15	Dy. 16mo; 2	1st; 4,500	P.	100 copies per anna.	.....	
Ditto ditto ...	„ 15	Dy. 16mo; 2	1st; 4,500	P.	100 copies per anna.	.....	
Ditto ditto ...	„ 15	Dy. 16mo; 2	1st; 4,500	P.	100 copies per anna	.....	
Ditto ditto ...	„ 15	Dy. 16mo; 2	1st; 4,500	P.	100 copies, per anna	.....	
Ditto ditto ...	„ 15	Dy. 16mo; 2	1st; 4,500	P.	100 copies, per anna	.....	
Ditto ditto ...	Mar. 18	Dy. 16mo; 2	1st; 4,500	P.	100 copies, per anna	.....	
Ditto ditto ...	„ 18	Dy. 16mo; 2	1st; 4,500	P.	100 copies, per anna.	.....	
Ditto ditto ...	„ 18	Dy. 16mo; 2	1st; 4,500	P.	100 copies per anna.	.....	
	1901.						
Rev. C. H. Harvey; the Young Women's Christian Association.	Dec. 30	Dy. 8vo; 30	1st; 300	P.	0 1 0	.....	
Ditto ditto ...	„ 26	Dy. 4to; 4	1st; 300	P.	.....	.....	
	1902.						
Ditto ditto ...	Jan. 25	Dy. 8vo; 4	1st; 300	P.	.....	.....	
Ditto ditto ...	Feb. 28	Dy. 8vo; 4	1st; 300	P.	.....	.....	
Rev. C. H. Harvey	Jan. 17	Dy. 8vo; 15	1st; 500	P.	.....	.....	
Ditto	„ 27	Dy. 8vo; 18	1st; 500	P.	.....	.....	
Ditto	„ 20	Dy. 8vo; 17	1st; 500	P.	.....	.....	
A. C. Mukherji; the International Tract Society.	Mar. 18	Cr. 8vo; 8	2nd; 3,000	P.	.....	The publishers, 39-1, Free School Street, Calcutta.	
Ditto ditto ...	Apl. 2	Cr. 8vo; 8	3rd; 3,000	P.	.....	Ditto ditto.	
Jnánendra Náth Dás; U. K. Májhi	„ 13	Cr. 24mo; 26	1st; 500	P.	0 0 6	.....	
S. C. Mukherji	May 17	Dy. 12mo; 24	7th; 3,000	P.	0 1 0	The Secretary, Tract and Book Society, 23, Chauringhi Road, Calcutta.	
K. P. Náth	Apl. 19	Dy. 12mo; 72	2nd; 500	P.	0 4 0	The Brahmo Mission Office, 3, Ramá Náth Majumdár's Street, Calcutta.	
Sádhu Charan Chanda; Machhud Ali.	May 8	Dy. 12mo; 72	2nd; 1,000	P.	0 3 0	.....	
Gostha Vihárí Banerji; the author	April 28	Dy. 8vo; 130	5th; 1,000	P.	0 5 0	Gostha Vihárí Banerji, 35-1, Haris Chatterji's Street, Kálighát, Calcutta.	
Girísh Chandra Ghosh; the author	Mar. 22	Rl. 12mo; 26	1st; 2,000	P.	0 1 3	The author, Nowkhela, Bogra.	
Sányál and Co.; the Dacca Library	Jan. 31	Dy. 12mo; 68	4th; 4,000	P.	0 1 6	The author, Maldah.	
S. P. Ghosh	Feb. 6	Dy. 16mo; 260	7th; 3,000	P.	0 8 0	Mrs. P. Ghosh, 2, Macleod Street, Calcutta.	
Ditto	Mar. 15	Dy. 16mo; 64	14th; 3,000	P.	0 1 0	Ditto ditto.	
Ditto	„ 25	Dy. 16mo; 358	7th; 3,000	P.	0 12 0	Ditto ditto.	
	1901.						
Kárttik Chandra Datta; the author	Nov. 2	Dy. 12mo; 100	2nd; 1,000	P.	0 6 0	The author, Suri, Birbhum.	

1 Serial number.	2 Registration number.	3 Title, with an English translation of the same when not in that language, the language of the book, and the subject.	4 Name of author, translator, or editor of the book, or any part of it.	5 Place of printing and publication.
		BENGALI BOOKS—concld.		
		SCIENCE (MATHEMATICAL)—*concld.*		
525	529	Sisuganit. Arithmetic for Children ...	Kiran Chandra Banerji	3-4, Gaur Mohan Mukherji's Street; 30, Cornwallis Street; Calcutta.
526	330	Sankshipta Sisuranjan . Pátíganit. Easy Arithmetic for the Entertainment of Boys. Parts I and II. (together).	Kálipada Basu	3-4, Gaur Mohan Mukherji's Street; 15, College Street; Calcutta.
527	658	Pratham Sikshá Subhankarí. First Instruction in Subhankar's System of Arithmetic.	Basanta Kumár Basu	5, Akrur Datta's Lane, Calcutta ...
528	379	Iuklider Jyámiti. Euclid's Geometry. Book I	P. Ghosh	32-1, Malangá Lane, Calcutta ...
529	381	Ditto ditto ...	Ditto	Ditto ditto ... ...
530	482	Saral Parimiti. Easy Mensuration ...	Ditto	Ditto ditto ... ...
531	265	Iuklider Jyámiti. Euclid's Geometry. Book I	Brahmamohan Mallik	46, Bechu Chatterji's Street, Calcutta ...
532	498	Sankshipta Jyámiti Praves. The Elements of Euclid, Book I.	Srínáth Bhattáchávyya	25-1, Scott's Lane, Calcutta ... ...
		SCIENCE (NATURAL AND OTHER).		
533	21	Bhút O Sakti. Matter and Force ...	Rámesvaránanda Brahmachárí ...	6, Sushthítalá, Kutighattá, Baráhanagar, 24-Parganas.
		Educational—		
534	128	Saral Sarír Pálaner Prasnottar. A Catechism of Saral Sarír Pálan.	Jánakí Náth Náth	The Vedavyás Press, Dacca ... ...
535	557	Bhúvidyá Vishayak Páth. Arthát Prákritik Bhúgol. Lessons in Physical Science or Physical Geography.	Rái Rádhiká Prasanna Mukherji Bahadur.	36, Bechu Chatterji's Street; 30, Cornwallis Street; Calcutta.
536	563	Saral Padárthavidyá. Easy Physical Science	Umes Chandra Ghosh	Ditto ditto ...
537	587	Svásthyer Upáyer Prasnottar. A Catechism of Svásthyer Upáy (Way to Health).	Mahendra Náth Vidyáratna ...	Mahendra Gosvámí's Lane; 68, College Street; Calcutta.
		ENGLISH BOOKS.		
		FICTION.		
84	4	Brothers Bully at Last. A Tale of NolNuggur School.	Jas. H. Brown	Berhampur ... ...
85	36	The Mysteries of the Court of London. Vol. II. (R).	George W. M. Reynolds ...	The Metropolitan Steam Printing Work, 131 Russa Road, Calcutta.
		HISTORY (INCLUDING GEOGRAPHY.)		
86	4	A Short Account of the Sudramani Rajas ...	S. C. Mukherji	The Sávitri Press, Bánsberia, Hugli ...
87	338	The India of Aurangzib Compared with the India of Akbar.	Yadu Náth Sarkár	25-1, Scott's Lane; 54-1, College Street; Calcutta.
88	615	Selected Men of Hindustan. Part I. ...	S. L. Tandan	40, Nayánchánd Datta's Street, Calcutta
89	614	The Kshatriya Prakása. Origin of Khatris. Part II.	Ditto	Ditto Ditto ...
		Educational—		
90	28	An Easy Guide to the History of India ...	Manmatha Náth Gánguli ...	The New Town Press, Bhawanipur, Calcutta.
91	28	Helps to the Study of Professor A. C. Mukherji's History of India.	Mákhan Lál De and Nílakánta Basu	The Manomohan Press, Bhawanipur ...
92	173	A Guide to History of the Indian People ...	Rames Chandra, Chakravartí ...	The Vaikuntha Náth Press, Dacca ...
93	306	A Catechism of Professor A. C. Mukherji's Short History of the Indian People.	H. C. Chatterji	45, Beniatolá Lane; 54, College Street; Calcutta.
94	404	A Catechism of the History of the Indian People.	Kailás Chandra Mánná and Devendra Náth Ráy.	10, Haladhar Barddhan's Lane; 58, Wellington Street; Calcutta.
95	454	A Guide to Mr. H. H. Stark's History of India for Junior Classes.	Tulasídás Mukherji	25, Guruprasád Chaudhurí's Lane; 108-3, College Street and 203-2, Cornwallis Street; Calcutta.
96	322	A Hand-Book of General Geography ...	H. C. Mitra	20-1, Suken's Street; 201, Cornwallis Street; Calcutta.
97	500	An Abstract of the Geographic Reader ...	S. Wilson ...	22-2; 17-2; Jhámápukur Lane, Calcutta.
98	550	A Geographical Reader	Rámendra Sundar Trivedí ...	46, Bechu Chatterji's Street, Calcutta...
99	559	Easy Steps to Geography and Map-pointing	R. N. Ghosh	46, Bechu Chatterji's Street; 66, College Street; Calcutta.
100	561	A Guide to Physicial Geography ...	Asvini Kumár Dás	46, Bechu Chatterji's Street; College Street; Calcutta.
101	547	Lessons in the History of Bengal ...	Kshetra Mohan Mukherji ...	46, Bechu Chatterji's Street, Calcutta ...
102	548	Readings in the History of India ...	Isán Chandra Ghosh	Ditto ditto ...
103	651	A Short History of the Indian People ...	A. C. Mukherji	46, Bechu Chatterji's Street; 30, Cornwallis Street; Calcutta.
104	694	A Guide to Mr. Abdul Karim's History of India for Beginners.	S. L. Maitra	37, Harrison Road; 97, College Street; Calcutta.
105	695	The Correct Guide to Professor A. C. Mukherji's Short History of the Indian People.	Ditto	37, Harrison Road; 58 Wellington Street and 108-3, College Street; Calcutta.
		LANGUAGE,		
		Educational—		
106	3	Notes Expository and Analytical on Sir William Lee-Warner's Citizen of India.	.....	The Vikás Machine Printing Works, Barisal.
107	93	A Complete Key to the English Entrance Course for 1908. Part II.	Kshírod Chandra Ráy Chaudhurí ...	The Orissa Mission Press, Cuttack ...
108	135	Macaulay's Essay on Milton	Jyotish Chandra Banerji ...	The Asutosh Press, Dacca . . ...
109	136	Model Questions, with Answers, on the English Entrance Course for 1903.	Dínabandhu Majumdár and Satyabhúshan Datta.	The Isán Press, Dacca ... ...

Second Quarter ending 30th June 1902—continued.

6	7	8	9	10	11	12	13
Name or firm of printer and of publisher.	Date of issue from the press or of the publication.	Size and number of sheets, leaves, or pages.	Number of edition and number of copies of which the edition consists.	Printed or litho'd.	Price at which the book is sold to the public.	Name and residence of the proprietor of copyright, or any part of it.	Copyright registered or not.
	1902.				Rs. A. P.		
R. Páin; the Sanskrit Press Depository.	Feb. 28	Dy. 12mo; 160	5th; 1,000	P.	0 5 0	The author, 30, Cornwallis Street, Calcutta.	
Ramánáth Páin; S. C. Basu ...	Jan. 22	D.cr. 16mo; 199	1st; 2,000	P.	0 8 0	The author, Professor, Dacca College.	
N. C. Basu; Nagendra Nath Basu	April 16	Dy. 16mo; 114	3rd; 2,000	P.	0 4 0	The author, Sonárpur, Rájpur, 24-Parganas.	
S. P. Ghosh	Feb. 19	Cr. 16mo; 188	2nd; 4,000	P.	0 8 0	Mrs. P. Ghosh, 2 Macleod Street, Calcutta.	
Ditto	„ 12	Cr. 16mo; 80	2nd; 3,000	P.	0 4 0	Ditto ditto.	
Ditto	Mar. 8	Cr. 16mo; 86	12th; 3,000	P.	0 2 6	Ditto ditto.	
R. Datta	Jan. 23	Dy. 12mo; 132	36th; 1,000	P.	0 6 0	The author, Hugli.	
Sányál & Co.	Feb. 21	D. cr. 16mo; 80	1st; 1,000	P.	Nil.	Ditto, Mymensingh.	
Adhar Chandra Chakravartí; the author.	Mar. 10	Dy. 12mo; 257	1st; 510	P.	1 0 0	The author, Barahanagar, 24-Parganas.	No. 38 R. No. 21, 11th March 1902.
Oshed Bake Sarkár; the Dacca Ripon Library.	„ 19	Dy. 12mo; 36	8th; 2,000	P.	0 8 0	.....	
R. Datta; Yadunáth Chatterji ...	„ 22	Dy. 12mo; 144	45th; 3,000	P.	0 6 0	The Author, Calcutta.	
Ditto ditto ...	„ 19	Dy. 12mo; 96	5th; 4,000	P.	0 4 0	The author, Narail.	
Naphar Chandra Sarkár; Mánik Lál De.	„ 15	Dy. 12mo; 48	5th; 3,000	P.	0 8 0	The publisher, 68 College Street, Calcutta.	
Bhagaván Chandra Ráy; the author	Mar. 12	Dy. 12mo; 132	1st; 600	P.	...	.....	
S. B. Mukherji	June 1	Rl. 8vo; 508	1st; 500	P.	1 0 0	S. B. Mukherji, 131, Russa Road, Calcutta.	
Annadá Prasád De	„ 18	Cr. 8vo; 36	2nd; 200	P.	0 12 0	Kumár Satíndra Deva Báhádur, Bánsberiá, Hugli.	
Sányál & Co, Basu Brothers ...	Jan. 24	Dy. 12mo; 300	1st; 500	P.	2 0 0	The author, Patna.	
Hari Charan Dás; the author ..	Mar. 20	D.cr. 16mo; 269	1st; 1,000	P.	5 0 0	The author, Maithan, Agra.	
Ditto Ditto ...	„ 20	D.cr.16mo; 414	1st; 1,000	P.	10 0 0	Ditto Ditto.	
M. N. Mitra; Bholá Náth Chatterji.	„ 30	D.cr. 16mo; 128	1st; 1,500	P.	0 8 0	The author, Manoharpukur Road, Bhawanipur, Calcutta.	
Manomohan Banerji, S. K. Láhiri, & Co.	Apl. 16	Dy. 12mo; 152	1st; 1,000	P.	0 10 0	The authors, Jorágrám Chakdighi, Burdwan.	
Vihárí Lál Datta; Vrajendra Mohan Datta.	Jul. 8	Dy. 12mo; 64	1st; 1,000	P.	0 10 0	.....	
Sasibhúshan Chakravartí, S. K. Láhiri & Co.	Jan. 25	Dy. 12mo; 168	1st; 1,000	P.	0 10 0	The author, 68-6, Cathedral Mission Lane, Calcutta.	
U. C. Nandí; S. C. Adhya & Co. ...	Mar. 3	Dy. 12mo; 137	1st; 2,000	P.	0 10 0	The author, 58, Wellington Street, Calcutta.	
Lál Mohan Chatterji, N. C. Datta & Co. and the Manomohan Library.	„ 11	Dy. 12mo; 76	10th; 2,000	P.	0 3 0	The author, 27, Guruprasád Chaudhuri's Lane, Calcutta.	
Gopál Chandra Ráy; Gurudás Chatterji.	Jan. 20	Cr. 8vo; 5	1st; 3,000	P.	0 10 0	The author, 17, Phakir Chánd Mitra's Street, Calcutta.	
Baradá Prasád Majumdár; A. P. Majumdár.	Feb. 20	Dy. 12 mo; 82	1st; 500	P.	0 6 0	Annadá Prasád Majumdár, 17-3, Jhámápukur Lane, Calcutta.	
R. Datta; P. Mukherji and Sons ..	Mar. 22	D.cr. 16mo; 46	1st; 100	P.		The author, Calcutta.	
R. Datta; Chatterji and Brothers	„ 25	D.cr 16 mo; 36	10th; 5,000	P.	0 3 6	The author, Surá, Calcutta.	
R. Datta; Joges Chandra Banerji	„ 22	D.cr.16mo; 116	20th; 1,000	P.	0 10 0	The author, Dacca.	
R. Datta; P. Mukhopádhyáy and Sons.	„ 20	D.cr. 16 mo; 48	1st; 50	P.	...	The author, Calcutta.	
Ditto ditto ...	„ 26	D.cr.16mo; 120	1st; 50	P.		Ditto	
R. Datta; Yadu Nath Mukherji ..	Apl. 15	D.cr.16 mo; 192	3rd; 10,000	P.	1 6 0	Ditto	
Sarat Chandra Háldár; H. K. Mandal.	„ 10	D.fc.16 mo, 80	1st; 1,000	P.	0 5 0	The publisher, 97, College Street, Calcutta.	
S. C. Háldár; S. C. Adhya & Co. and N. C. Datta and Co.	Mar. 28	D.fc. 16 mo; 137	1st; 1,000	P.	0 10 0	A. T. Mukherji, 87, Harrison Road, Calcutta.	
Nivárun Chandra Chatterji	Apl. 20	Dy. 12 mo; 41	1st; 2,000	P.	0 8 0	.....	
Rev. R. J. Grundy	May 6	D cr. 16mo; 44	1st; 500	P.	0 2 0	The author.	
Revatí Mohan Dás; Harirám Dhar...	Apl. 3	Dy. 12mo; 206	1st; 1,000	P.	1 4 0	.....	
Mathurá Náth De	„ 21	Dy. 12mo; 132	1st; 1,000	P.	0 12 0	.....	

1	2	3	4	5
Serial number.	Registration number.	Title, with an English translation of the same when not in that language, the language of the book, and the subject.	Name of author, translator, or editor of the book, or any part of it.	Place of printing and publication.
		ENGLISH BOOKS—contd.		
		LANGUAGE—*concld.*		
110	214	English Readings from Standard Authors...	Ratnamani Gupta, Rái Sáheb ...	3-4, Gaur Mohan Mukherji's Street, Calcutta.
111	239	A Guide to Rowe's Hints, Bain's Grammar etc., in the Form of Question and Answer.	S. C. Mukherji	64, Akhil Mistri's Lane, Calcutta ...
112	314	A Junior English Grammar	D. N. Basu	63, Bechu Chatterji's Street; 30, Cornwallis Street; Calcutta.
113	357	A Key to the English Entrance Course in Prose and Poetry for 1908.	H. A. Stark	87, Harrison Road; 103-3, College Street; Calcutta.
114	* 396	Notes on Burke's Letter to the Sheriffs of Bristol.	.....	78, Amherst Street, Calcutta ...
115	398	English Translation of the New Persian Entrance Course, Calcutta University. (T).	Translated by Maulví Syed Husain Ali.	41, Lower Circular Road; 3, Maulvi's Lane, Collingá Bázár Street; Calcutta.
116	400	Notes on the English Entrance Course for 1903, with Questions and Answers and Test Examination Papers.	Bholánáth Pál	78 Amherst Street; 54-1, College Street; Calcutta.
117	402	Moral Lessons	Kshírod Chandra Ráy	46, Bechu Chatterji's Street; 63, College Street; Calcutta.
118	403	Junior English Reader	S. N. Bhadra	46, Bechu Chatterji's Street, Calcutta; Dacca.
119	455	Model Questions with Answers and 100 Explanations on Selections from Cowper's Letters and the Deserted Village.	R. Basu and S. Bhattácharjya ...	10, Sambhu Chatterji's Street; 65, College Street; Calcutta.
120	544	Moral Readings	G. Datta	17, Madan Mitra's Lane; 67, College Street, Calcutta.
121	560	Select Readings from Juvenile Literature. Part II.	Triguná Charan Sen	46, Bechu Chatterji's Street; 63, College Street; Calcutta.
122	591	A Commentary on Burke's Letter to the Sheriffs of Brisol and the Two Speeches on America, with Introduction and Analyses.	N. N. Ghose	21-2, Gopímohan Basu's Lane; 54, College Street; Calcutta.
123	662	A Key to the English Entrance Course, 1903	D. B. Set	108, Báránasí Ghosh's Street; 54, College Street; Calcutta.
124	681	The National English Reader, Fourth Book	Mrs. Lily Soward	32-1, Malangá Lane, Calcutta ...
		LAW.		
125	24	Celebrated Trials in India. Volume I ...	J. Ghoshál	55, Balarám Basu's 1st Lane, Bhawanipur.
126	218	The Civil Procedure Code (Act XIV of 1882), as Amended up to date.	Mahim Chandra Sarkár ...	8 to 5, Bow Street, Calcutta ...
127	319	Analysis of Nelson's Law of Property ...	Narenda Kumár Basu	3, Hasting's Street; 54-1, College Street; Calcutta.
128	466	Principles of the Law of Contract, with an Appendix.	Hara Kumár Mitra	43, Vrindávan Basák's Street; 6, Old China Bázár Street; Calcutta.
129	478	The Revised Law Reports, Criminal Rulings. Part X. April, 1900.	Hem Chandra Mitra	29, Kálidás Sinha's Lane; 29, Huzurimal's Lane; Calcutta.
130	„	Ditto ditto Part XI. May, 1900	Ditto do.	Ditto ditto ...
131	„	Ditto ditto Part XII. June, 1900	Ditto do.	Ditto ditto ...
132	„	Ditto ditto Part XIII. July, 1900	Ditto do.	Ditto ditto ...
133	„	Ditto ditto Part XIV. August, 1900	Ditto do.	Ditto ditto ...
134	„	Ditto ditto Part XV. Sept., 1900	Ditto do.	Ditto ditto ...
135	„	Ditto ditto Part XVI. Oct., 1900	Ditto do.	Ditto ditto ...
		MISCELLANEOUS		
136	1	A Short Account of the Guptipárá Temple ..	Satís Chandra Mukherji... ...	The Society Press, Guptipárá, Sántipur
137	532	Tactics as applied to Schemes	Major J. Sherston	5-6, Government Place, Calcutta ...
138	533	The Imperial Army of India	Lieutenant-Colonel E. T. Paul ...	Ditto ditto ... ...
139	431	A Manual of Building Construction in Bengal. Part I.	S. K. Basu	114, Amherst Street; 54, College Street; Calcutta.
140	649	Vyavasthá Patra. An authoritative expression of opinion by pandits.	Dína Náth Dhar	46, Bechu Chatterji's Street, Calcutta ...
141	660	The Science of Sexes	B. B. Mitra	79-3-2-3, Cornwallis Street, Calcutta ...
142	666	Ready Reckoner	.....	46, Dharmatalá Street, Calcutta ...
143	667	The Land of Regrets	Rev. J. H. Messmore	Ditto ditto ...
144	8	Mourn for the Dead	Rámesvar Lál	The Satya Sudhákar Press; the Chawk; Patna.
145	9	Report of the Santal Mission of the United Free Church of Scotland, Bengal, for 1901.	Rev. J. A. Dyer	Pokhuria, Manbhum ... ...
146	1	Leh Medical Mission Report for 1901 ...	E. Shawe	Ditto ... ...
147	2	Report of the C. M. S. Santal Native Church Council, 1900-1901.	Rev. D. M. Brown	Ditto ... ...
148	9	The Scheme for a Soap Manufactory ...	Jagadís Guha	The Básanti Press, Mymensing ...
149	22	A Retrospect of the Hindu Society ...	Mati Lál Som	16, Khelát Babu's Road, Tálá Calcutta.

Second Quarter ending 30th June 1902—continued.

6	7	8	9	10	11	12	13
Name or firm of printer and of publisher.	Date of issue from the press or of the publication	Size and number of sheets, leaves, or pages.	Number of edition and number of copies of which the edition consists.	Printed or litho'd.	Price at which the book is sold to the public.	Name and residence of the proprietor of copyright, or any part of it.	Copyright registered or not.
	1902				Rs. A. P.		
R. Páin; Avinás Chandra Gupta ...	...	Dy. 16 mo; 119	3rd; 1,000	P.	0 12 0	The author, Dacca.	
Haridás Ghosh; Kedár Náth Basu...	Jan. 12	D. cr. 16mo; 416	6th; 2,000	P.	1 4 0	Kedár Náth Basu, B.A., 64, Akhil Mistri's Lane, Calcutta.	
G. C. Basu & Co.; the Sanskrit Press Depository.	„ 20	D.fc. 16mo; 224	13th; 12,050	P.	0 12 0	The author, 2, Jagadís Náth Ráy's Lane, Calcutta.	
Sarat Chandra Háldár; N. C. Datta & Co.	Feb. 15	Dy. 12 mo; 254	1st; 3,000	P.	2 0 0	The author, Principal, Calcutta Madrasa.	
Hari Charan Mánná; B. N. Mitra...	„ 8	Dy. 12 mo; 64	1st; 500	P.	0 6 0	The New Britania Press Depository, 78, Amherst Street, Calcutta.	
Rev. C. H. Harvey; Shámsul ulámá Maulvi Ahmad.	„ 19	Rl. 8vo.; 92	1st; 4,000	P.	...	The publisher, 3, Maulvi's Lane, Calcutta.	
Hari Charan Mánná; Shek Maniruddin & Co.	„ 10	D.cr.16mo.; 495	1st; 2,000	P.	2 0 0	The author, 45, Simla Street, Calcutta.	
R. Datta; Brajendra Náráyan De...	„ 4	D.cr. 16mo; 112	2nd; 2,300	P.	0 8 0	The author, Dacca.	
R. Datta; the author	„ 4	D.cr. 16mo; 144	3rd; 2,000	P.	0 12 0	Ditto.	
U. Rakshit; the Sarvamangalá Library.	Mar. 1	D. fc. 16mo; 88	1st; 1,000	P.	0 6 0	The Sarvamangalá Library, 65, College Street, Calcutta.	
U. C. Sámanta; the Students' Library.	„ 5	D.cr. 16mo; 106	2nd; 1,100	P.	0 8 0	The author, 67, College Street, Calcutta.	
R. Datta; S. C. Basu	„ 19	D.cr. 16mo; 278	6th; 2,000	P.	1 0 0	The author, Calcutta.	
Sasí Bhúshan Dás; S. K. Láhirí & Co.	„ 21	Cr. 8vo; 172	1st; 1,000	P.	1 4 0	The author, 43, Bánchhárám Akrur's Lane, Calcutta.	
N. C. Pál; S. K. Láhirí & Co.	Apl. 15	Cr. 16mo; 366	1st; 4,000	P.	2 0 0	The author, 154, Balarám De's Street, Calcutta.	
S. P. Ghosh; the National Printing and Publishing House.	Mar. 24	D.cr.16mo; 144	3rd; 3,000	P.	0 12 0	The authoress, London, and Púrna Chandra Chakravarti, 32-1. Malangá Lane, Calcutta.	
M. Banerji	Apl. 2 1901.	Rl. 8vo; 332	1st; 1,000	P.	3 0 0	Manomohan Banerji 55, Valarám Basu's 1st Lane, Bhawanipur.	
B. Barál ...	Dec. 31	Rl. 8vo; 750	2nd; 1,500	P.	8 0 0	The author, Dacca.	
Jay Gopál Dás; Basu Brothers ...	Oct. 9	Dy. 8vo; 72	1st; 1,000	P.	1 0 0	The author, 36, Mirjáfar's Lane, Calcutta.	
Ramánáth De; the author ...	„ 14 1902.	Dy. 12mo; 116	1st; 1,000	P.	...	The author.	
Kángáli Charan Chaudhurí; Báma Chandra Sarkár.	Feb. 14	Rl. 8vo; 32	1st; 1,000	P.	0 12 0	Siddheswar Chaudhurí, 29, Kalidás Sinha's Lane, Calcutta.	
Ditto ditto ...	„ 14	Rl. 8vo; 45	1st; 1,000	P.	0 12 0	Ditto ditto.	
Ditto ditto ...	„ 14	Rl. 8vo; 38	1st; 1,000	P.	0 12 0	Ditto ditto.	
Ditto ditto ...	„ 14	Rl. 8vo; 45	1st; 1,000	P.	0 12 0	Ditto ditto.	
Ditto ditto ...	„ 14	Rl. 8vo; 45	1st; 1,000	P.	0 12 0	Ditto ditto.	
Ditto ditto ...	„ 14	Rl. 8vo; 45	1st; 1,000	P.	0 12 0	Ditto ditto.	
Ditto ditto ...	„ 14	Rl. 8vo; 45	1st; 1,000	P.	0 12 0	Ditto ditto.	
Tuhin Chandra Mukherji ...	Jan. 20	Dy. 8vo; 11	1st; 200	P.	...	Tuhin Chandra Mukherji, Guptipárá, Sántipur.	
Thacker, Spink & Co.	Feb. 26	Rl. 8vo; 204	3rd; 1,000	P.	9 0 0	Thacker, Spink & Co., 5-6, Government Place, Calcutta.	
Ditto ditto ...	„ 25	D.cr.16mo; 60	1st; 500	P.	3 0 0	The author.	
G. C. Niyogí; S. K. Láhirí & Co....	„ 16	Cr. 8vo; 160	1st; 1,000	P.	1 12 0	Ditto.	
R. Datta	Apl. 15	Dy. 12mo; 18	1st; 200	P.	...	Kumár Dínendra Náth Ráy, Calcutta.	
Srímanta Ráy Chaudhurí; Sasibhúshan Biswás.	Mar. 30	D.fc. 16mo; 96	1st; 1,000	P.	2 0 0	The author, Bankipur.	
Joseph Culshaw	Apl. 1	D.cr. 16mo; 90	1st; 1,000	P.	1 0 0	The Methodist Publishing House, 46, Dharmatalá Street, Calcutta.	
George Henderson	„ 6	Dy. 16mo; 26	1st; 250	P.	0 4 0	Ditto ditto.	
Bhágavat Tewárí; the author ...	May 24	Dy. 12mo; 20	1st; 500	P.	.....	The author, Dewán Mahallá, Patna.	
A. Campbell; the Santal Mission Press.	Apl. 22	Dy. 8vo; 34	1st; 350	P.	.....	.....	
Ditto ditto ...	Mar. 19	Dy. 8vo; 10	1st; 150	P.	.....	.....	
Ditto ditto ...	„ 19	Dy. 8vo; 10	1st; 50	P.	.....	.....	
Ráma Chandra Ananta	May 28	Dy. 8vo; 8	1st; 1,000	P.	.....	.....	
Mati Lál Som	„ 26	Cr. 8vo; 24	1st; 500	P.	0 2 0	Mati Lál Som, 16, Khelát Babu's Road, Tálá, Calcutta.	

1	2	3	4	5
Serial number.	Registration number.	Title, with in English translation of the same when not in that language, the language of the book, and the subject.	Name of author, translator, or editor of the book, or any part of it.	Place of printing and publication.
		ENGLISH BOOKS—concld.		
		MISCELLANEOUS—*concld.*		
150	147	Evidence before the University Commission	Abdul Karim	The Asutosh Press, Dacca ... ...
151	216	Student Life and the Stage	Binayendra Náth Sen	48, Grey Street, Calcutta ... .
152	220	Sight-Testing for the General Practitioner ...	F. Davidson	20, British Indian Street, Calcutta . .
153	235	Hints on Letter-Writing	M. Dunn	108, Báránasi Ghosh's Street, Calcutta; Allahabad.
154	287	The Separation of Judicial and Executive Functions in British India.	Prithvís Chandra Ráy	8, College Square, Calcutta ... ...
155	308	The Islamic Libraries	Khodá Baks	5 and 6, Government Place, Calcutta ...
156	333	Insurance Ready Reference	T. N. Dás	17, Madan Mitra's Lane, Calcutta ...
157	356	Pictorial Leisure Hours for the Young ...	A. T. Mukherji	37, Harrison Road; 103-3, College Street; Calcutta.
158	376	Reminiscences of a Bengal Detective ...	N. Banerji	2, Goábágán Street; 6 3, Rám Dhan Mitra's Lane; Calcutta.
159	385	Teacher's Manual of Primary Education ...	Sarat Chandra Sen Gupta ...	10, Haladhar Barddhan's Lane; 58, Wellington's Street; Calcutta.
160	429	Some Desultory Notes on Lord Curzon's Work in India.	Krishna Chandra Ráy	114, Amherst Street; 54, College Street; Calcutta.
161	452	Hindu Society	Kánái Lál Mukherji	2, Hari Pál's Lane; 201, Cornwallis Street; Calcutta.
162	462	Wizard's Manual, Mind-Reading, Conjuring &c. Magic, Ventriloquism.	Messrs. Y. Paul & Co.	10, Sambhu Chatterji's Street; 17, Kapálitolá Lane; Calcutta.
163	465	Solution of Two Important problems of the Day.	B. L. Ráy	48, Vrindávan Basák's Street; Nimtalá Street; Calcutta.
164	484	The Calcutta University as it is and as it should be.	S. S. Chakravarti	33-1, Patuátolá Lane, Calcutta ...
		Educational—		
165	243	Entrance Manual	H. M. Gosain and H. C. Chatterji ...	108, Baranasi Ghosh's Street; 54, College Street; Calcutta.
166	461	The Mentor. Part I	Nagendra Nath Ghosh	5, Nilamádhav Sen's Lane; 54-1, College Street; Calcutta.
167	„	Ditto. Part II	Ditto	Ditto ditto ...
168	„	Ditto. Part III...	Ditto	Ditto ditto ...
169	„	Ditto. Part IV	Ditto	Ditto ditto ...
		PHILOSOPHY.		
170	289	The Intellectual Ideal	Binayendra Náth Sen	8, College Square, Calcutta ...
		Educational—		
171	215	Moral Philosophy	Mohit Chandra Sen	48, Grey Street; 20, Cornwallis Street; Calcutta.
172	269	Brief Notes on Ethics	C. R. Wilson	64, Akhil Mistri's Lane, Calcutta ...
173	335	Prof. Gough's Lecture—Notes on Logic, with Allahabad, Punjab and Calcutta University F. A. Questions.	Annadá Prasád Majumdár ...	22-2; 17-2; Jhámápukur Lane, Calcutta
174	781	A Synopsis of Logic	A. Banerji	45, Beniatolá Lane; 54, College Street; Calcutta.
		POETRY.		
175	8	Birthday Breathings, Companion to Twilight Thoughts and the Dawn after Death.	Charles Lipp Alexander ...	Pokhuria, Manbhum ... ...
		Educational—		
176	270	Milton's Paradise Lost. Book I ...	Kshírod Chandra Ráy Chaudhuri ...	64, Akhil Mistri's Lane, Calcutta ...
		RELIGION.		
177	501	Jesus, the "Saviour of the World." (C.) ...	Rev. W. R. James	41, Lower Circular Road, Calcutta ...
178	502	Salvation or Hell—Which? (C.) ...	Ditto	Ditto ditto ...
179	503	Christ's Work for us, and in us. (C.) ...	Ditto	41, Lower Circular Road; 23, Chauringhi Road; Calcutta.
180	575	Chimes for the Young. No. 9. (C.) ...	W. H. Stanes	41, Lower Circular Road; 10, Kyd Street; Calcutta.
181	668	Sin and Salvation from Sin, as Taught in the Tantras.	Rev. K. S. Macdonald	46, Dharamtalá Street, Calcutta. ...
		SCIENCE (MATHEMATICAL).		
		Educational—		
182	120	Child's Arithmetic	G. Dhar	The Asutosh Press, Dacca ...
183	432	Easy Steps to Arithmetic	K. P. Chattaráj	5, Nilamádhav Sen's Lane; 64, College Street; Calcutta.
		SCIENCE (NATURAL AND OTHER).		
184	399	A Clinical Hand-Book of Urine Analysis ...	Charles H. Bedford	45, Beniatolá Lane; 54, College Street; Calcutta.
		Educational—		
185	302	Synopsis of Practical Chemistry (Qualitative), Inorganic and Organic.	Ditto	Ditto ditto ...
		TRAVELS AND VOYAGES.		
186	418	An Itinerary of the Route from Sikkim to Lhasa.	Graham Sandberg	41, Lower Circular Road, Calcutta ...

Second Quarter ending 30th June 1902—continued.

6	7	8	9	10	11	12	13
Name or firm of printer and of publisher.	Date of issue from the press or of the publication.	Size and number of sheets, leaves, or pages.	Number of edition and number of copies of which the edition consists.	Printed or lithd	Price at which the book is sold to the public.	Name and residence of the proprietor of copyright, or any part of it.	Copyright registered or not.
	1902.				Rs. A. P.		
Revatí Mohan Dás; Abdul Karim	Apl. 27	Dy. 8vo; 28	1st; 375	P.	....	...	
R. C. Ghosh	Jan. 31	D.cr. 16mo; 31	1st; 1,000	P.	0 4 0	The author, 6, Mechhuábázár Road, Calcutta.	
	1901.						
Messrs. Trail & Co.; the author ...	Dec. 10	Fc. 8vo; 58	2nd; 1,000	P.	2s. 6d.	F. Davidson; Messrs. Kemp & Co., Ld., Bombay.	
	1902.				Rs. A. P.		
N. C. Pál; the School Book Depót.	Jan. 20	Dy. 12mo; 89	2nd; 1,000	P.	0 8 0	M. Dunn, Allahabad.	
Tulasí Charan Dás	„ 20	Rl. 8vo; 370	1st; 1,000	P	1 8 0	The author, 45-5, Beniatolá Lane, Calcutta.	
Thacker, Spink & Co.	Feb. 10	Cr. 8vo; 30	1st; 50	P.	Nil	The author.	
U. C. Sámanta; the author ...	„ 6	Dy. 12mo; 11	1st; 500	P.	0 4 0	The author, 10, Nawabdi Ostégar's Lane, Calcutta.	
S. C. Háldár; N. C. Datta & Co.	„ 24	Fc. 4to; 82	2nd; 1,000	P	0 8 0	The author, 37, Harrison Road, Calcutta.	
Kunja Vihárí Dás; the author ...	„ 24	Dy. 12mo; 118	1st; 1,500	P.	0 12 0	Nila Kanai Banerji, 6-3, Rámdhan Mitra's Lane, Calcutta.	
U. C. Nandí; S. C. Adhya & Co.	„ 26	Dy. 12mo; 102	1st; 500	P.	0 6 0	S. C. Adhya & Co. 58, Wellington Street, Calcutta.	
Gopál Chandra Niyogí; S. K. Láhirí & Co.	„ 17	Dy. 8vo; 75	1st; 300	P.	Nil	The author.	
N. L. Sil and Sons; Gurudás Chatterji.	Mar. 6	Dy. 8vo; 249	1st; 500	P.	...	.....	
U. Rakshit; the author ...	Feb. 20	Dy. 12mo; 120	1st; 1,000	P.	1 0 0	The author, 17, Kapalitolá Lane, Calcutta.	
	1901.						
Surendra Náth Háldár; the author	Dec. 23	Dy. 8vo; 16	1st; 2,000	P.	1 0 0	The author.	
	1902.						
H. L. Adhya; the author ...	Mar. 19	Dy. 8vo; 15	1st; 500	P.	0 2 0	The author, 83-1, Patuátolá Lane, Calcutta.	
N. C. Pál; S. K. Lahiri & Co. ...	Jan. 2	Dy. 12mo; 236	1st; 1,000	P.	2 0 0	.....	
Asutosh Goshál; Basu Brothers ...	Feb. 29	Cr. 8vo; 64	1st; 1,000	P.	1 4 0	The publishers, 54-1, College Street, Calcutta.	
Ditto ditto ...	„ 29	Cr. 8vo; 104	1st; 1,000	P.	1 4 0	Ditto ditto.	
Ditto ditto ...	„ 29	Cr. 8vo; 70	1st; 1,000	P.	1 4 0	Ditto ditto.	
Ditto ditto ...	„ 29	Cr. 8vo; 120	1st; 1,000	P.	1 4 0	Ditto ditto.	
Tulasí Charan Dás	Jan. 20	Cr. 8vo; 115	1st; 500	P.	1 0 0	The author, Presidency College, Calcutta.	
R. C. Ghosh; S. C. Majumdár ...	„ 30	Dy. 8vo; 155	1st; 1,000	P.	1 0 0	.....	
Haridás Ghosh; Kedár Náth Basu.	Feb. 2	D.cr. 16mo; 54	1st; 1,000	P.	0 8 0	Kedár Náth Basu, 64, Akhil Mistri's Lane, Calcutta.	
Varadá Prasád Mujumdár; A. P. Majumdár & Co.	Jan. 30	D. cr. 16mo; 80	1st; 500	P.	0 5 0	Annadá Prasád Majumdár, 17-2, Jhámápukur Lane, Calcutta.	
Sasibhúshan Chakravartí; S. K. Láhirí & Co.	Mar. 10	Dy. 12mo; 36	1st; 1,000	P.	0 5 0	The author, Uttarapárá.	
A. Campbell; the Santal Mission Press.	Apl. 16	Dy. 8vo; 18	1st; 200	P.	...	.....	
Haridás Ghosh; Kedár Náth Basu ...	Jan. 25	D.cr. 16mo; 110	1st; 1,000	P.	0 12 0	Kedár Náth Basu, 64, Akhil Mistri's Lane, Calcutta.	
Rev. C. H. Harvey; the Campaign Committee.	Feb. 14	Dy. 8vo; 2	1st; 1,000	P.	....	.....	
Ditto ditto ..	„ 19	Dy. 8vo; 2	1st; 10,000	P.	.....	.....	
Rev. C. H. Harvey; the Christian Tract and Book Society.	„ 19	Cr. 8vo; 2	1st; 10,000	P.	.....	.....	
Rev. C H. Harvey; the India Sunday School Union.	„ 28	Cr. 8vo; 4	1st; 1,000	P.	.....	.....	
Rev. George Henderson ...	Apl. 16	D.cr. 24mo; 27	1st; 1,000	P.	.....	The author.	
Revatí Mohan Das; Harirám Dhar	Mar. 18	Dy. 12mo; 210	7th; 1,000	P.	0 8 0	The City Book Society, 64, College, Street, Calcutta.	
Asutosh Ghoshál; the City Book Society.	Feb. 26	D.cr. 16mo; 154	2nd; 2,000	P.	0 8 0	.....	
Sasibhúshan Chakravartí; S. K. Láhirí & Co.	Feb. 22	Dy. 8vo; 109	1st; 1,050	P.	2 0 0	The author, 4, Middleton Street, Calcutta.	
Ditto ditto ...	„ 8	Dy. 8vo; 172	1st; 1,050	P.	2 0 0	Ditto ditto.	
Rev. C. H. Harvey; the author ...	Jan. 20	Rl. 8vo; 30 and 2 maps.	1st; 165	P.	.....	.....	

1	2	3	4	5
Serial number	Registration number.	Title, with in English translation of the same when not in that language, the language of the book and the subject.	Name of author, translator, or editor of the book, or any part of it.	Place of printing and publication.
		HINDI BOOKS.		
		FICTION.		
22	1	Priyáballabh Premamohani. (Two names)	Syámjí Sarmá Kávyatírtha ...	The Crown Press, Matihárí ... ...
		HISTORY (INCLUDING GEOGRAPHY).		
23	11	Srí Haris Chandra Kalá. Works by Haris Chandra. No. 7. (R.)	Edited by Rámdin Sinha ...	The Khadgavilás Press, Bankipur ...
		Educational—		
24	4	Sube Bangál Ká Itihás. "Histroy of Subo Bengal." (T.)	Translated by Pandit Siva Náráyan Trivedí.	Gayá ... ...
		LANGUAGE.		
		Educational—		
25	2	Sisubodh. Instruction for Children. Part I.	Devakí Nandan Saháy	The Crown Press, Matihárí ... ...
26	3	Níti Taranga Waves of Morals ...	Valadev Rám Jhá	Gaya ... ...
27	1	Padhneki Pahilí Pustak. "First Book of Reading."	G. E. L. Mission	Ranchi ... ...
28	1	Hindi Varna Parichay. Hindi Alphabetical Primer. Part I.	Mathurá Náth Chatterji	The Behar Angel Press, Bhagalpur ...
29	7	Pahilí Pustak Arthát Varna Sikshá. First Book or An Alphabetical Primer.	Isvarí Prasád	Patna City ... ...
30	1	Hindi Varna Parichay. Hindi Alphabetical Primer. Part I.	Mathurá Náth Chatterji	The Dinapur Central Press, Dinapur ...
31	2	Ditto ditto. Part II ...	Ditto	Ditto ditto ... ...
32	3	Padhne kí Pahilí Pustak. First Reading Book.	Rev. R. Kilgour	The Visitor Press, Darjeeling ...
33	613	Hitabodh. Knowledge of What is Good ...	Sasi Bhúshan Sen	62, Amherst Street; 30, Cornwallis Street; Calcutta.
34	3	Hitopadesa. Moral Instructions. Part I ...	Rámdín Sinha	The Khadgavilás Press, Bankipur ...
35	...	Hindí Vyákaran. Hindi Grammar ...	Ayodhyá Prasád Kshatrí	Ditto ditto ... ...
		MISCELLANEOUS.		
36	365	Khyál Pándabonká. Virát Parva. Pahalábhag. Songs relating to the Story of the Pándavas as told in the Virátaparva. Part I.	Nannu Lál Ráná	75; 132; Cotton Street, Calcutta ...
37	4	Gajal Guljár. A Multitude of *Gajal* Songs	Isvarí Prasád	Patna City ... ...
38	5	Hásya Sudhákar. The Moon of Laughter....	Bálakrishna and Valadeva Sarmá	Ditto ... ...
39	2	Krishí Tattva Pradípa. The Lamp of the Truths of Agriculture.	Rájá Rám	Bhagalpur ... ...
40	541	Krishi Darpan. The Mirror of Agriculture	Hem Chandra Mitra	71, Bartalá Street; the Kásipur Krishisálá; Calcutta.
		POETRY.		
41	8	Bharatharí Charit. The Life of Bharatharí	Bálakrishna and Valadev Sarmá ..	Patna City ... ...
42	363	Jayapur Vihár. Travels in Joypur ...	Vraja Ballabh Misra	75, Cotton Street; 13, Náráyan Prasád's Lane; Calcutta.
43	1	Chait Chintámanih. The Chintamani Jewel of Songs sung in the month of Chaitra.	Nathuní Prasád	The Satya Sudhákar Press, Chauk, Patna City; Mogalpurá, Patna.
44	12	Srí Haris Chandra Kalá. Works by Haris Chandra. No. 8. Sudámá Charit. Life of Sudámá. (R).	Edited by Rámdin Sinha ...	The Khadgavilás Press, Bankipur ...
45	18	Ditto ditto. No. 9	Ditto ...	Ditto ...
		RELIGION.		
46	3	Rájyábhishek Vidhi. Coronation Service ...	Rev. E. H. Whitly	Ranchi ... ...
47	2	Skul Sambandhí Sádháran Niyam Aur Kátekism Sanbandhí Prasnottar Jo Bihán Aur Sánjhke Girjeme Kiyo Játe. General Rules relating to School and Question and Answer on the Catechism in use in the Church, Morning and Evening.	Ditto	Do. ... ...
48	2	Holí Sudhákar. The Moon of the *Holí* Festival.	Bálakrishna and Valadev Sarmá Kávyatírtha.	The Satya Sudhákar Press, Patna City; Chauk, Patna.
49	3	Atha Gaurí Viváha. Marriage of Gaurí (Goddess Durgá).	Gaurí Prasád Misra	The Central Press, Bhagalpur ...
50	5	Bhajanávalí. A Collection of *Bhajan* Songs.	Totádri Raman	Gayá ... ...
51	...	Srí Sítá Ráma Chamtáyana. Life of Sítá and Ráma.	Sítal Prasád Sinha	The Agarwálá Press, Gayá ...
52	5	Srí Haris Chandra Kalá No. 1. Srí Raghuvaraguna Darpana. Works by Haris Chandra. No. 1 Mirror of the Virtues of Rághuvara (Ráma Chandra). (R.)	Edited by Rámdín Sinha ...	The Khadgavilás Press, Bankipur ...
53	6	Ditto ditto. No. 2. (R.) ...	Ditto	Ditto ... ...
54	7	Ditto ditto. No. 3. (R.) ...	Ditto	Ditto ... ...
55	8	Ditto ditto. No. 4. (R.) ..	Ditto	Ditto ... ...
56	9	Ditto ditto. No. 5. (R.) ...	Ditto	Ditto ... ...
		SCIENCE (MATHEMATICAL).		
		Educational—		
57	4	Guru Darpan. The Guru's Mirror. ...	Sumaran Lál	The Behar Angel Press, Bhagalpur; Mahagámá, Santal Parganas.

Second Quarter ending 30th June 1902—continued.

6	7	8	9	10	11	12	13
Name or firm or printer and of publisher.	Date of issue from the press or of the publication.	Size and number of sheets, leaves, or pages.	Number of edition and number of copies of which the edition consists.	Printed or litho'd.	Price at which the book is sold to the public.	Name and residence of the proprietor of copyright, or any part of it.	Copyright registered or not.
	1902.				Rs. A. P.		
Mákhan Lál Basu	Apl. 7	Dy. 8vo; 26	1st; 1,000	P.	0 2 6	The author, Bhadwar, Arrah.	
Chandí Prasád Sinha	Apl. 3	Rl. 8vo.; 40	1st; 200	P.	0 8 0	The editor, Khadgavilás Press, Bankipur.	
Vrindávan Dikshita	Apl. 16	Dy. 8vo. 107	8th; 1,000	P.	0 5 0	The Translator, Gayá.	
Mákhan Lál Basu	Apl. 16	Dy. 12mo; 26	1st; 1,000	P.	0 1 0	The author, the Sub-Inspector of Schools, Matihárí.	
Vrindávan Dikshita	Apl. 6	Dy. 12mo; 118	4th; 1,000	P.	0 4 0	Valadev Rám Jhá, Gaya.	
Rev. Dr. A. Nottrott	May 9	Dy. 12mo; 26	15th; 5,000	P.	0 0 6	.....	
Charles Peter; the author ...	Apl. 13	Dy. 12mo; 36	18th; 5,000	P.	0 1 0	The author, Inspector of Schools, Dacca Division.	
Bhágavat Tewárí; Isvarí Prasád ...	June 11	Rl. 12mo; 16	1st; 2,000	P.	0 1 0	The author, Murájganj, Patna.	
Nava Kumár Sinha	Jan. 20	Dy. 12mo; 36	17th; 10,000	P.	0 1 0	The author.	
Ditto	„ 20	Dy. 12mo; 36	16th; 10,000	P.	0 1 0	Ditto.	
A. H. Gasper	Apl. 8	Dy. 8vo; 48	8th; 500	P.	0 1 0	Rev. Kilgour, Scotch Mission, Darjeeling.	
Upendra Nath Chakravartí; the Sanskrit Press Depository.	Mar. 13	Dy. 12mo; 83	1st; 1,000	P.	0 2 0	The author, Arrah.	
Chandi Prasád Sinha	„ 29	Dy. 8vo; 79	New; 800	P.	0 6 0	The author, Khadgavilás Press, Bankipur.	
Ditto	Apl. 6	Dy. 8vo; 55	2nd; 750	P.	0 4 0	The author, Akharaghát Muzaffarpur.	No. 36R., No. 1, 12th April 1902.
Rasik Lál Pán; Mungi Lál Hálvái.	Feb. 22	Rl. 12mo; 58	1st; 1,000	P.	1 0 0	The publisher, 132, Cotton Street, Calcutta.	
Bhágavat Tewárí; the author ...	May 22	Dy. 12mo; 12	1st; 1,000	P.	0 1 0	The author, Marufganj, Patna.	
Bhágavat Tewárí; the authors ...	„ 20	Dy. 12mo; 40	1st; 500	P.	0 2 0	The authors, Chauk Patna City.	
Charles Peter; the author ...	Apl. 14	Dy. 12mo; 36	1st; 500	P.	0 2 0	The author, M. V. School, Bhagalpur.	
Dakshiná Charan Chakravartí; the author.	Mar. 25	Dy. 8vo; 286	1st; 1,000	P.	1 8 0	The author, Kásipur Krishisálá, Calcutta.	
Bhágavat Tewárí; the authors ...	Jun. 10	Rl. 12mo; 28	1st; 1,000	P.	0 1 0	The authors, Chauk, Patna City.	
Rasik Lál Pán; the author ...	Feb. 15	Dy. 8vo; 52	1st; 1,000	P.	0 4 0	The author, 13, Náráyan Prasád's Lane, Calcutta.	
Bhágavat Tewárí; the author ...	May 23	Rl. 12mo; 12	1st; 1,000	P.	0 1 0	The author, Mogalpurá, Patna.	
Chandí Prasád Sinha	Apl. 4	Rl. 8vo; 56	1st; 200	P.	6 0 0 Yearly.	The editor, Khadgavilás Press, Bankipur.	
Ditto	„ 5	Rl. 8vo; 56	1st; 200	P.	...	Ditto ditto.	
Rev. Dr. A. Nottrott	May 31	Dy. 8vo; 15	1st; 500	P.	...	.....	
Ditto	„ 31	Dy. 12mo; 12	1st; 1,000	P	0 0 3	.....	
Bhágavat Tewárí; the authors ...	May 21	Dy. 8vo; 14	1st; 500	P.	0 1 0	The authors, Chauk, Patna City.	
Ráma Chándra Misra; the author...	Apl. 5	Dy. 4to; 12	1st; 1,000	P.	0 4 0	The author, Pleader, Adampur, Bhagalpur.	
Vrindávan Díkshita	„ 29	Dy. 12mo; 10	1st; 1,000	P.	.....	The author, Gaya.	
Harihar Prasád	June 17	Rl. 8vo; 357	1st; 1,000	P.	2 0 0	The author, Imámganj, Gaya.	No. 37R. No. 1, 18th June 1902.
Chandí Prasád Sinha	Mar. 31	Rl. 8vo; 48	1st; 200	P.	6 0 0 Yearly.	The editor, Khadgavilás Press, Bankipur.	
Ditto	„ 31	Rl. 8vo; 40	1st; 200	P.	.....	Ditto ditto.	
Ditto	„ 31	Rl. 8vo; 40	1st; 200	P.	.....	Ditto ditto.	
Ditto	„ 31	Rl. 8vo; 40	1st; 200	P.	.....	Ditto ditto.	
Ditto	„ 31	Rl. 8vo; 37	1st; 200	P.	.....	Ditto ditto.	
Charles Peter; the author ...	May 10	Dy. 8vo; 37	2nd; 1,	P.	0 3 0	The author, Head Pandit, Mahagámá Government M. V. School, Santal Parganas.	

1	2	3	4	5
Serial number.	Registration number.	Title, with an English translation of the same when not in that language, the language of the book, and the subject.	Name of author, translator, or editor of the book, or any part of it.	Place of printing and publication.
		MANIPURI BOOKS.		
		LANGUAGE.		
		Educational—		
2	569	Vári Pareng. The Translation of Káthámálá (Garland of Stories). (T.)	Rev. W. Pettigrew	41, Lower Circular Road, Calcutta; Manipur, Assam.
		MUSALMANI-BENGALI BOOKS.		
		FICTION.		
14	249	Málancha Kanyár Kechchhá. The Story of the Girl named Málancha.	Munsí Ayajaddin Sáheb	155, Masjidbárí Street; Calcutta ...
15	188	Sahi Dulhin Námá. The true Story of a Bride	Muhammad Abdul Gani	The Alimí Press, Churihátá; Chak Bázár; Dacca.
		MISCELLANEOUS.		
16	1	Dholer Panditi. Mastership in playing on the *Dhol* (name of a native Musical Instrument).	Muhammad Parán Pandit and Hedan Mián.	The Sunáton Press, Chittagong ...
17	2	Asal Shándár Bara Rangin Kavitá. A very Humorous Poem on a real Debauchee.	Makbul Ahámad	Ditto ditto ...
18	132	Tohphátannechhá. Presents to a Woman ...	Munsí Bájitullá	The Emdádul Islámiyá Press, Churihátá, Dacca; Jugali, Nayápárá, Mymensing.
19	139	Sahi Sákháot Námá. A Book on true Liberality.	Munsí Abdur Rahim Sáhev ...	The Alimí Press, Churihátá; Chak Bázár; Dacca.
20	166	Hedáyetal Fáchhekin. A Guide to the Sinner.	Iuchhaf Ahammad	The Alimí Press, Churihátá, Dacca; Hogláí, Purbadhalá, Mymensing.
21	250	Hábil Kábiler Kechchhá. Story of Hábil and Kábil. (Two Sons of Adam).	Maulví Abduchchobhán Sáheb ...	155, Masjidbárí Street, Calcutta ...
22	1	Kámanáun Sangí, Kalir Bhaugí. Following of One's Own Inclination. The Fashion of the Kali Era.	Munsí Ahmad Alí Khán ...	Karatiyá, Mymensing ... ...
		RELIGION.		
23	200	Sare Bekáyá. A Commentary on the Book named *Bekáyá*. Parts 1 and 2. (M.) (T.)	Maulví Abdul Káder	133, Masjidbárí Street; 335, Upper Chitpur Road; Calcutta.
24	137	Nural Echhlám. Light of Islam. (M.) ...	Mahammad Abdul Hálim ...	The Alimí Press, Churihátá; Domrá Kándá; Dacca.
25	...	Sarva Vrihat Káchháchhal Ambíyá Chárjyárí O Sáháváganer Khaláphat. The fullest Account of the Prophets and of the Kaliphship of the Four Friends and Companions (of Muhammad).	Munsi Tájaddin Mahammad, Munsí Mahammad Kháter, and Munsi Abdul Oháb.	155, Masjidbárí Street; 335, Upper Chitpur Road; Calcutta.
		PERSIAN BOOKS.		
		LANGUAGE.		
		Educational—		
1	397	New Persian Selection for the Entrance Examination.	Shámsul-Ulámá, Maulvi Ahmed ...	41, Lower Circular Road; 3, Maulaví's Lane; Calcutta.
		MISCELLANEOUS.		
2	436	Fayuzat-i-Wájed. Writings of Wájed (a name).	Mohamed Barhan-ulláh	55, Imámbári Lane, Calcutta; Dacca ...
		SANSKRIT BOOKS.		
		LANGUAGE,		
26	579	Bibliotheca Indica. New Series No. 1005, Mahábháshya Pradípodyotah. The Illuminator of the Lamp on the great Scholium. Vol. II. Fasc. III. (R.)	Edited by Bahuvallabha Sástrí ...	41, Lower Circular Road; 57, Park Street; Calcutta.
27	625	Sankshiptasár Vyákaranam. The Essence of Grammar in Brief. (R.)	Syámá Charan Kaviratna ...	2, Goábágán Street; 201, Cornwallis Street; Calcutta.
		Educational—		
28	228	Sukha Pátham. Easy Lessons. ...	Devendra Kumár Vidyáratna ...	3-4, Gaur Mohan Mukerji's Street, Calcutta; Chittagong.
29	241	Nítirahasyam. The Secret of Morals. Part I	Yatindra Náth Kávyatírtha ...	64, Akbil Mistri's Lane, Calcutta ...
30	242	Samskrita Kaumudí. Moonlight of Sankrit	Vanamáli Chakravartí and Lakshmí Charan Mukherji.	64, Akhil Mistri's Lane, Calcutta; Barisal.
31	612	Samskrita Kaliká. Blossoms of Sanskrit. Part II,	Sivanáráyan Siromani	62, Amherst Street, Calcutta ...
		MEDICINE.		
32	203	Náḍí Vijnánam. The Science of the Pulse. (R.)	Rájendra Náráyan Sen Gupta ...	100-2, Mechhuábázár Road; 80, Cornwallis Street, Calcutta.
		MISCELLANEOUS.		
33	648	Suvarna Vanigvishayiki Vyavastha. Opinion of Pandits regarding the Suvarna Vanik Caste.	Pramatha Náth Tarkabhúshan ...	46, Bechu Chatterji's Street, Calcutta...
		RELIGION.		
34	6	Mahimna Stotram. Hymn in honour of the Greatness of the God Siva. (H.)	Bálakrishna and Baladeva ...	The Satya Sudhákar Press; the Chank; Patna.
35	29	Yajurvediya Sandhyá Paddhatih. Ritual for Daily Religious Rites as enjoined in the Yajurveda. (H.) (R.)	.....	55, Bálarám Basu's 1st Lane, Bhawanipur.

Second Quarter ending 30th June 1902—continued.

6	7	8	9	10	11	12	13
Name or firm of printer and of publisher.	Date of issue from the press or of the publication	Size and number of sheets, leaves, or pages.	Number of edition and number of copies of which the edition consists.	Printed or litho'd.	Price at which the book is sold to the public.	Name and residence of the proprietor of copyright, or any part of it.	Copyright registered or not.
	1902.				Rs. A. P.		
Rev. C. H. Harvey; the editor ...	Mar. 1	Cr. 8 vo; 64	1st; 1,000	P.	0 6 0	.....	
Maniruddin Ahammad; Mahammad Aptábuddin, Mahammad Heláluddin and Mahammad Soleman.	Feb. 4.	Rl. 8vo; 45	1st; 2,000	P.	0 1 6	The publishers, 155, Masjidbári Street; Calcutta.	
Hámidar Rahaman Khán; Mahammad Rabiullá.	Apl. 11	Rl. 8vo; 23	1st; 1,000	P.	0 2 0	.....	
B. Chaudhurí; Hedam Mián, Karamalí Sadágar, Rahamalí Sadágár, Abdul Raup Hájí, and Mukbul Ahamad Pandit.	Apl. 10	Dy. 8vo; 62	1st; 4,000	P.	0 8 0	The publishers, Chittagong.	
B. Chaudhurí	„ 3	Dy. 12mo; 12	1st; 1,000	P.	0 2 0	The author, Noápárá, Chittagong.	
Mahammad Imdádullá; Mahammad Tamijuddin Sarkár.	Mar 15	Rl. 8vo; 35	1st; 1,000	P.	0 2 0	.....	
Hámidar Rahaman Khán; Hájí Alimuddin.	Apl. 18	Rl. 8vo; 64	1st; 2,200	P.	0 4 0	.....	
Hámidar Rahaman Khán; the author.	May 11	Rl. 8vo; 24	1st; 1,000	P.	0 2 0	.....	
Maniruddin Ahammad	Feb. 4	Rl. 8vo; 70	1st; 2,000	P.	0 2 0	Maniruddin Ahammad, 155, Masjidbárí Street; Calcutta.	
Mír Atahár Alí; the author ...	Apl. 12	Dy. 8vo; 16	1st; 1,000	P.	0 1 0	The author, Jaydá, Mymensing.	
Yogendra Náth Chakravartí; Mafijuddin Ahammad.	Jan. 30	Dy. 8vo; 557	1st; 2,000	P.	3 0 0	The publisher, 335, Upper Chitpur Road, Calcutta.	
Hájí Alímuddin; the author ...	Apl. 4	Rl. 8vo; 30	1st; 1,000	P.	0 2 0	.....	
Golám Iusaf; Mafijuddin Ahammad	Feb. 28	Rl. 4to; 920	1st; 2,000	P.	4 2 0	The publisher, 335, Upper Chitpur Road, Calcutta.	
Rev. C. H. Harvey, the Compiler	Feb. 19	Rl. 8vo; 90	1st; 6,000	P.	...	The compiler, 3, Maulvie Lane, Calcutta.	
Abdul Muzaffar Maula Baks Rezwán; the author.	Mar. 7	Dy. 8vo; 128	1st; 500	L.	0 8 0	The author, Dacca.	
Rev. C. H. Harvey; the Asiatic Society.	Feb. 28	Dy. 8vo; 96	1st; 500	P.	.....	.....	
Kunja Vihárí Dás; Gurudás Chatterji.	Mar. 11	Dy. 8vo 1,374	1st; 1,000	P.	5 8 0	Mánik Lál De, 57, College Street, Calcutta.	
R. Páin; the author	Jan. 12	D.fc. 16mo; 58	1st; 1,000	P.	0 3 0	The Author, Chittagong.	
Haridás Ghosh; Kedár Náth Basu.	„ 20	D.fc. 16mo; 36	1st; 1,000	P.	0 3 0	Kedár Náth Basu, 64, Akhil Mistri's Lane, Calcutta.	
Haridás Ghosh; the Adarsa Library	„ 16	D.fc 16mo; 48	1st; 500	P.	0 3 0	Ditto ditto.	
Upendra Nath Chakravartí ...	April 1	Dy. 12mo; 60	7th; 1,000	P.	0 4 0	The author.	
T. D. Chatterji; the Sanskrit Press Depository.	Jan. 17	Dy. 12mo; 48	1st; 1,000	P.	0 4 0	The author, Kánsáripará, Simlá, Calcutta.	
R. Datta	Apl. 15	Dy. 12mo; 20	1st; 200	P.	.....	Kumár Dínendra Náráyan Ráy, Calcutta.	
Bhagaván Tewárí; the authors ...	June 14	Dy. 32mo; 64	1st; 1,000	P.	0 2 0	The authors, Patna.	
Manomohan Banerji	Apl. 27	Dy. 12mo; 9	4th; 1,000	P.	0 1 0	28, Chaulpati Lane; Calcutta.	

1 Serial number.	2 Registration number.	3 Title with an English translation of the same when not in that language, the language of the book, and the subject.	4 Name of author, translator, or editor of the book, or any part of it.	5 Place of printing and publication.
		SANSKRIT BOOKS—concld.		
		RELIGION—*concld.*		
36	31	Chhandogánám Viváhádi Sanskára Paddhatih Vájasaneyinám Viváhádi Sanskára Paddhatiscba. Ritual for Marriage and other Purificatory Ceremonies of the *Chhándogás* (those who follow the Sámaveda) and the *Vájaseneyinas* (who follow the White Yajurveda). (H.) (R).	Parameswar Jhá	Dwarbhangá ... ...
37	75	Prátahsmarana. Recitation and Remembering (of verses) in the morning. (H.)	Nilamani Vidyáratna	Cuttack ... ...
38	237	Bibliotheca Indica. New Series. No. 1004. Nityáchár Paddhatih. The Ritual for the Performance of the Daily Religious Duties. Fasc. III. (R.)	Edited by Vinod Viharí Bhattácháryya.	62, Amherst Street; 57, Park Street; Calcutta.
39	274	Mukti Chintámanih. The Chintámani Jewel of Salvation. (R.)	Sadásiva Misra	25, Pataldángá Street, Calcutta; Puri
40	372	Sarvopari Sri Ráma Prayoga Tantra. The best Tantra on the Use of the Name of Ráma. (R.)	Gangá Datta	75, Cotton Street; 166-168, Harrison Road; Calcutta.
41	420	Bibliotheca Indica. New Series. No. 1003. Varsha Kriyá Kaumudí. The Moonlight of the Religious Ceremonies Performed during the Year. (R.)	Kamal Krishna Smritibhúshan ...	41, Lower Circular Road; 57, Park Street; Calcutta.
42	491	Durgá Sapta Satí Chandí. A Book called Chandí containing 700 Verses in honour of the Goddess Durgá. (R.) (H.)	Kunja Lál Bhúti	25-1, Scott's Lane; 90, Phear's Lane; Calcutta.
43	622	Gangá Jalam. The Water of the Ganges. Part I. (H.)	Krishna Mohan Chakravartí ...	26, Giris Vidyáratna's Lane, Calcutta ...
44	678	Stavaratnamálá. The Garland of the Jewel of Hymns. (H.)	.....	127, Masjidbárí Street, Calcutta ...
		TIBETAN BOOKS.		
		RELIGION.		
1	406	Tibetan Hymn Book. Part II. (C.) ...	Rev. D. Macdonald	41, Lower Circular Road, Calcutta; Ghoom.
		UDRU BOOKS.		
		DRAMA.		
9	2	Prem Gubbárá. The Balloon of Love ...	Sambhu Prasád	The Tríkuti Vilás Press, Muzaffarpur ...
10	364	Fauji Afsar. The Military Officer ...	.....	75, Cotton Street; 91, Harrison Road, Calcutta.
11	50	Eshaq-o-Mahabbat. Love and Devotion ...	.....	Ditto ditto ...
12	72	Honahár. Impending	.....	Ditto ditto ...
13	2	Vidyá-Vinod. Delight in Learning. Vol. VIII	Chundi Prashád Sinha	The Khadga Vilás Press, Bankipur ...
		FICTION.		
14	15	Shamsher. Sword	Bagalá Prasád	The Bihar Bandha Press, Bankipur ...
		LANGUAGE.		
		Educational—		
15	4	Urduke-Chauthi Kitáb. Urdu Reader. No. 4	Haris Chandra	The Khadga Vilás Press, Bankipur ...
16	253	Tajved-ul-Qurán-o-Tálím-ul-wákif. Pronunciation and Punctuation of the Qurán.	Ahsán-ulla	55, Lower Chitpur Road, Calcutta ...
		LAW.		
17	6	Qwáed-e-Manzabita-e-Municipality. Municipal Bye-Law.	The Commissioners of the Gaya Municipality.	Gaya ... ...
		POETRY.		
18	301	Kashkul-i-Qawáli. A Book of Love Songs...	Abdur Rashíd	55, Lower Chitpur Road, Calcutta ...
19	2	Dilshád. Heart's Ease	Rám Prasád	Bara bazar, Calcutta ... ...
		RELIGION.		
20	251	Muftáh-ul-Jannat. Key to Heaven ...	Karámat Ali	55, Lower Chitpur Road, Calcutta ...
		URIYA BOOKS.		
		DRAMA.		
51	95	Gangá Janma Tándava Suánga. Drama describing the Story of the Birth of the Goddess Gangá with Frantic Dance (by Siva).	Sambhu Náth Mahápátra ...	The Ráy Press; Sekh Bazar; Cuttack ...
52	99	Chari Bhái Suánga. Drama describing the Story of the Four Brothers.	Rádhá Mohan Mahalá and Gopí Náth Chatterji.	The Utkal Sáhitya Press, Bálubázár; Cuttack.
		LANGUAGE.		
		Educational—		
53	78	Bálya Páth. Lessons for Childhood ...	Jagannáth Ráo	The Utkal Sáhitya Press, Bálubázár; Kálígalí; Cuttack.
54	86	Bályapáthara Vyákhyá. A Key to Bályapáth.	Ráma Krishna Ráo	The Utkal Sáhitya Press, Bálubázár; Ganes Mandir; Cuttack.
		POETRY.		
55	56	Náva Keli. The Boat Sports	Dina Krishna Dás	The Arunoday Press; Khátbinsahi; Cuttack.
56	55	Kapat Pásá. False Dice	Bhíma Dhivara	The Cuttack Printing Co.'s Press, Alám Chand Bázár, Cuttack.
57	59	Vasanta Gáthá. Verses on Spring ...	Madhu Súdan Ráo	The Orissa Mission Press, Cuttack ...

Second Quarter ending 30th June 1902—continued.

6	7	8	9	10	11	12	13
Name or firm of printer and of publisher.	Date of issue from the press or of the publication.	Size and number of sheets, leaves, or pages.	Number of edition and number of copies of which the edition consists.	Printed or litho'd.	Price at which the book is sold to the public.	Name and residence of the proprietor of copyright, or any part of it.	Copyright registered or not.
	1902				Rs. A. P.		
Kánta Vihárí Míra	May 3	Dy. 8vo; 260	3rd; 1,000	P.	2 0 0	.....	
Bhágírathí Sethiyá; the Cuttack Printing Company's Press.	Apl. 27	D.fc. 16mo; 9	1st; 1,000	P.	0 1 0	The author.	
Upendra Nath Chakravarti; the Asiatic Society of Bengal.	Jan. 29	Dy. 8vo; 96	1st; 500	P.	0 6 0	The Asiatic Society of Bengal, 57, Park Street, Calcutta.	
K. P. Chakravartí; the author ...	Feb. 1	Dy. 8vo; 76	1st; 1,000	P.	0 4 0	The author, Puri.	
Rasik Lál Pán; the author ...	„ 24	Dy. 12mo; 12	1st; 1,000	P.	0 2 0	The author, 166-168, Harrison Road, Calcutta.	
Rev. C. H. Harvey; the Asiatic Society of Bengal.	„ 6	Dy. 8vo; 96	1st; 500	P.	.....	.....	
Sányál & Co.; the author ...	Mar. 10	D.fc. 16mo; 258	1st; 1,000	P.	0 12 0	The author.	
Sasibhúshan Kritiratna	„ 9	Dy. 12mo; 52	1st; 500	P.	0 4 0	The author, Rupsi, Dhubri, Assam.	
Dína Náth Mánná; Basák & Sons	Apl. 10	Dy. 12mo; 164	1st; 1,000	P.	0 8 0	Basák & Sons, 127, Masjidbári Street, Calcutta.	
Rev. C. H. Harvey; the editor ...	Feb. 11	F'cap. 8vo; 32	1st; 500	P.	.....	.....	
Devi Prasád	Apl. 23	Dy. 12mo; 12	1st; 800	P.	0 0 6	..... Curzon Theatrical Co., 91, Harrison Road, Calcutta.	
Rásik Lál; the Curzon Theatre, Co.	Feb. 21	Dy. 12mo; 12	1st; 1,000	P.	0 2 0	Ditto.	
Ditto ditto	„ 24	Dy. 12mo; 31	1st; 1,000	P.	0 2 0	Ditto.	
Ditto ditto	„ 23	Dy. 12mo; 19	1st; 1,000	P.	0 2 0	Rám Din Sinha, Khadgavilás Press, Bankipur.	
Chandí Prashád Sinha ...	Mar. 31	Dy. 8vo; 336	1st; 500	P.	1 0 0		
Aklu Lál; the author	May 25	Dy. 8vo; 40	1st; 1,000	P.	0 4 6	Bagalá Prasád, Arrah. ...	No. 28, R., No. 2, 28th May 1902.
Chandí Prasád Sinha ...	Mar. 30	Dy. 8vo; 110	1st; 1,000	P.	0 10 0	Rám Din Sinha, Khadgavilás Press, Bankipur.	
Abdul Gaffar; Abdur Rashíd ...	Jan. 14	R'l. 8vo; 16	1st; 1,000	L.	0 4 0	Ahsán-ulla.	
Gaya Municipality	June 17	Rl. 8vo; 18	1st; 100	L.	.....	The Gaya Municipality.	
Abdul Gaffar; Abdur Rashíd ...	Jan. 11	Dy. 8vo; 56	1st; 1,000	L.	0 4 0	The author.	
Rám Prasád	Mar. 25	Dy. 8vo; 8	1st; 10,000	P.	0 1 0	Rám Prasád, Barabazar, Calcutta.	
Abdul Rashíd; Abdul Gaffar ...	Jan. 1	Rl. 8vo; 128	2nd; 2,000	L.	0 4 0	.....	
S. B. Ráy; K. M. Achárryya ...	May 29	Dy. 12mo; 10	1st; 1,000	P.	0 1 0	K. M. Achárryya, Sekh Bazar; Cuttack.	
Visvanáth Kar	June 14	Dy. 12mo; 8	1st; 1,000	P.	0 0 3	The author, Raghunáthpur, Cuttack.	
Visvanáth Kar; the author ...	May 7	Dy. 12mo; 44	3rd; 5,000	P.	0 2 0	The author, Kálígalí, Cuttack.	
Ditto ditto ...	„ 28	Dy. 12mo; 24	2nd; 2,000	P.	0 1 6	The author, Ganes Mandir, Cuttack.	
Bhágavat Prasád Dán; Madhusúdan Datta.	Mar. 17	D.fc. 16mo; 14	2nd; 1,000	P.	0 0 6	The publisher, Khátbinsahi, Cuttack.	
Bhágírathí Sáthiyá	„ 14	D.fc. 16mo; 21	1st; 1,000	P.	0 1 0	Bhágírathí Sáthiya, Alamchánd Bázár, Cuttack.	
Rev. R. J. Grundy	„ 15	F'cap. 8vo; 40	1st; 500	P.	0 3 0	The author, Cuttack.	

1 Serial number.	2 Registration number.	3 Title, with in English translation of the same when not in that language, the language of the book, and the subject.	4 Name of author, translator, or editor of the book, or any part of it.	5 Place of printing and publication.
		URIYA BOOKS—concld.		
		POETRY—*concld.*		
58	57	Bhramarabara Pálá. The story of Bhramarabara (a name).	Bhrigurám	The Arunoday Press, Cuttack ...
59	67	Cháruchitra. Beautiful Picture	Nanda Kisor Bal	The Utkal Sáhitya Press, Cuttack ...
60	68	Báramási O Chitákutá O Viraha Varnaná O Páhánti Avakás O Vanasobhá Varnaná. Description of Twelve months and Marking the Body with the Coloured Earth. Description of the Pangs of Separation, Day-break and a Description of the Beauties of a Forest.	Chintámani Paḍiári	The Darpanráj Press, Cuttack; Syám Kunja Lane, Puri.
61	69	Chánda Dei Kánda O Báramási Kolli. Báramási Gít. The Weeping of Chánda Devi and a Description of Twelve months purporting to be an Address to the Cuckoo. Songs of Twelve months.	Sadásiva Datta	The Arunoday Press, Cuttack ...
62	91	Rádhá Náth Granthávalí. Works by Rádhá Náth.	Rai Rádhánáth Ráy, Báhádur ...	The Arunoday Press; Khaḍiálay; Cuttack.
63	94	Chitá Kutá O Tárá Dei Kánda. Marking the Body with the Coloured Earth and the Weeping of Tárá Devi.	Mohan Náyak	The Ráy Press; Hánsnávád, Cuttack ...
64	97	Mahá Devi Bhiktoriyá. The Great Queen Victoria.	Madhu Súdan Ráo	The Arunoday Press; Cuttack ...
		RELIGION.		
65	90	Sávitrí Upákhyán. The Story of Sávitrí. (A name) (H.)	Raghu Náth Datta	Ditto ditto ...
66	77	Kamalákánta Chautisá. Thirty-four Verses in honour of Kamalákánta (Krishna). (H.)	Dina Krishna Dás	Ditto ditto ...
67	71	Ditto ditto ...	Ditto	The Cuttack Printing Co.'s Press, Cuttack.
68	89	Daksha Yajna. The Sacrifice by Daksha. (H.)	Púrnánanda Sáhu	The Arunoday Press, Cuttack ...
69	87	Asvamedha Yajna. Horse Sacrifice. (H.) ...	Dina Nidhi	Ditto ditto ...
70	75	Ditto ditto (H.) ...	.....	The Cuttack Printing Co.'s Press, Cuttack.
71	61	Dárdhyatábhakti Rasámrita. The Nectar of Firm Faith. (H.)	Rám Dás	The Ráy Press, Cuttack ... ...
72	88	Lakshmí Purána. The Name of a Purána. (H.)	Valarám Dás	The Arunoday Press, Cuttack ...
73	84	Niáli Chautisá O Mán Mochana Chautisá. Thirty-four Versels addressed to Niáli (Name of a Flower) and Thirty-four Verses on the Removal of *Mán* (a wife's attitude of Affected Anger towards her Husband). (H.)	Amar Náth Sinha	The Cuttack Printing Co.'s Press, Cuttack.
74	85	Srí Krishna Svargárohan. Srí Krishna's Ascent to Heaven. (H.)	Chandramani Pandá	The Orissa Patriot Press, Mahammadiá Bázár, Cuttack.
75	76	Kapilesvaranka Janán. Prayers to the God Kapilesvara (Siva). (H).	Kapilesvar Vidyábhúshan ...	The Arunoday Press, Cuttack ...
76	29	Trináth Melá. The Fair in honour of God Trináth. (H.)	.....	The Níhár Press, Contái ... ...
77	33	Lakshmí Purána. The Name of a Purána. (H.)	.....	Ditto ... ...
78	70	Saríbheda Bhajana. Hymn about the True Knowledge of the Body. Part II. (H).	.....	The Arunoday Press; Bálubázár Cuttack.
79	66	Srímad Bhágavat. Dasama Skandha. Book of the Lord. 10th Skandha. (H).	Jagannáth Dás ...	Ditto Ditto
80	64	Janán Máliká. Garland of Prayers (H.) ...	.....	The Darpan Ráj Press, Bálubázár. Cuttack.
81	65	Dasa Avatár. The Ten Incarnations. (H.) ...	.....	The Ráy Press, Cuttack . . ...
82	54	Dharma Dúta. Messenger of Religion. Part I. (H.)	.....	The Utkal Sáhitya Press, Bálubázár; Pátaná, Balángir; Cuttack. ...
83	60	Dharma Niktí "Just Balances. or an Inquiry into True Religion." (C.) (T.)	Revd J. F. Ullmann ...	The Orissa Mission Press, Cuttack
		SCIENCE (MATHEMATICAL).		
		Educational—		
84	53	Anka Pustak. Arithmetic. Part II ...	Madhu Súdan Ráo and Madhu Súdan Dás.	The Orissa Mission Press, Cuttack.
85	72	Práthamik Anka Síkshá. First Instruction in Arithmetic.	Sekh Maniruddin	Ditto, Ditto
86	74	Panakiá Máliká. A Garland of Arithmetical Tables.	Govinda Chandra Mahápátra ...	The Orissa Patriot Press, Mahammadíyá Bazar; Nayágar School; Cuttack.
87	98	Mánasánka O Bajár Hisáva. Mental Arithmetic and Bazar Accounts. Parts I and II.	Sítá Náth Ráy.	The Ráy Press, Cuttack .. ...
		BI-LINGUAL BOOKS.		
		I.—ARABIC AND MUSALMANI-BENGALI BOOKS.		
		RELIGION.		
1	165	Suhi Ahkámas-sálát. Correct *maslás* of Namáz.	Faizuddin	Alimí Press, Churihatta; Chak Bázár; Dacca ... ...
2	284	Idal-Azhá. The Id Festival ...	Sayed Nawáb Ali Chaudhurí ...	14, Metcalf Street, Calcutta ...

Second Quarter ending 30th June 1902—continued.

6	7	8	9	10	11	11	13
Name or firm of printer and of publisher.	Date of issue from the press or of the publication.	Size and number of sheets, leaves, or pages.	Number of edition and number of copies of which the edition consists.	Printed or litho'd.	Price at which the book is sold to the public.	Name and residence of the proprietor of copyright, or any part of it.	Copyright registered or not.
	1902.				Rs. A. P.		
Madhusúdan Datta	„ 22	Dy. 12mo; 26	3rd; 1,000	P.	0 2 0	Madhusúdan Datta, Khátbinsahi, Cuttack.	
Visvanáth Kar	Apl. 12	D.fc. 16mo; 60	1st; 5,000	P.	0 4 0	The author.	
Adam Samuel; Arata De ...	„ 5	Dy. 16mo; 16	1st; 1,000	P.	0 1 0	Arata De, Syám Kunja Lane, Puri.	
Bhágavat Prasád Dán; Pánusáhu	Apl. 14	Dy. 12mo; 12	1st; 1,000	P.	0 1 0	Sadásiva Datta and others, Cuttack.	
Bhágavat Prasád Dán; Sivanáráyan Dev Lálásáhob.	May 30	Rl. 8vo; 266	1st; 1,000	P.	3 0 0	The author, Cuttack.	
S. B. Ráy; Gadádhar Satapathi ...	„ 30	Dy. 12mo; 9	1st; 1,000	P.	0 1 0	The publisher, Hánsnávád, Cuttack.	
Bhágavat Prasád Dán; the author	June 12	D.fc. 24mo; 9	2nd; 5,000	P.	0 1 6	The author, Cuttack.	
Ditto ditto ...	June 9	Dy. 12mo; 28	1st; 1,000	P.	0 2 0	Ditto.	
Bhágavat Prasád Dán	May 9	Dy. 12mo; 12	5th; 1,000	P.	0 1 0	The publisher, Cuttack.	
Bhágírathí Sáthiyá	Apl. 11	Dy. 12mo; 12	1st; 2,000	P.	0 1 0	Ditto.	
Bhágavat Prasád Dán; Sudarsan Nanda.	May 30	D.fc. 16mo; 38	1st; 1,000	P.	0 2 0	Nityánanda Sáhu, Cuttack.	
Bhágavat Prasád Dán	„ 30	D.fc. 16mo; 38	7th; 1,000	P.	0 3 0	.....	
Bhágírathí Sáthiyá	„ 3	D.fc. 16mo; 39	1st; 2,000	P.	0 2 0	The publisher, Alamchánd Bázár, Cuttack.	
S. B. Ráy	Mar. 26	Dy. 12mo; 460	1st; 1,000	P.	1 0 0	S. B. Ráy, Kálígalí, Cuttack.	
Bhágavat Prasád Dán; Abhinna Chandra Dán.	May 30	Dy. 12mo; 28	5th; 1,000	P.	0 2 0	The publisher, Cuttack.	
Bhágírathí Sáthiyá	„ 22	Dy. 12mo; 9	1st; 1,000	P.	.....	The author, Junágar, Kálahándí, Cuttack.	
Madan Mohan Náyak	„ 14	Rl. 32mo; 12	1st; 1,000	P.	0 0 6	The author, Chaupárá, Cuttack.	
Bhágavat Prasád Dán; Kási Náth Pandá and others.	„ 9	Dy. 16mo; 8	1st; 1,000	P.	0 0 6	The publishers, Cuttack.	
Madhu Súdan Jáná	„ 6	Dy. 8vo; 12	5th; 1,000	P.	0 0 6	The publisher, Contái.	
Ditto	Apl. 1	Rl. 8vo; 33	6th; 500	P.	0 1 6	Ditto.	
Bhágavat Prasád Dán; Lálá Atmánáráyan Ráy, Kapil De, and Nityánanda Sáhu.	„ 14	Dy. 12mo; 20	3rd; 1,000	P.	0 1 6	The publishers, Cuttack.	
Bhágavat Prasád Dán; Madhu Súdan Datta.	„ 9	Dy. 8vo; 137	4th; 1,000	P.	0 10 0	The publisher, Cuttack.	
Adam Samuel; Govinda Rath ...	Mar. 29	Dy. 12mo; 44	2nd; 200	P.	0 2 6	Govinda Rath, Bálubázár Cuttack.	
S. B. Ráy	„ 29	Rl. 32mo; 4	1st; 1,000	P.	0 0 3	S. B. Ráy, Kálígalí, Cuttack.	
Visvanáth Kar; the Sanátan Dharma Sabhá.	„ 14	Rl. 8vo; 8	1st; 500	P.	.....	Secretary, Sanátan Dharma Sabhá, Balángir, Pátná, Cuttack.	
R. J. Grundy	„ 18	Dy. 12mo; 69	1st; 2,000	P.	0 0 6	Calcutta Tract Society, 23, Chauringhi Road, Calcutta.	
R. J. Grundy; the author ...	Mar. 12	Dy. 12mo; 215	1st; 1,000	P.	0 8 0	The authors, Cuttack. ...	No. 39 R., No. 2., 20th June 1902.
Ditto Ditto ...	Apl. 16	Dy. 12mo; 120	1st; 1,000	P.	0 4 0	The author, Training School, Cuttack.	
Madan Mohan Náyak; the author ...	„ 18	F' cap. 8vo; 19	2nd; 2,000	P.	0 1 0	The author, Teacher, Nayágar School, Cuttack.	
S. B. Ráy	June 7	F' cap. 8vo; 92	11th; 1,600	P.	0 3 0	S. B. Ráy, Sekh Bázár, Cuttack	
Hámidar Rahaman Khán; Háji Alimuddin.	May 8	Rl. 8vo; 96	3rd; 1,000	P.	0 6 0	.....	
Ramá Náth Ghosh	Feb. 10	Dy. 8vo; 174	1st; 110	P.	1 0 0	The author, 14, Metcalfe Street, Calcutta.	

1 Serial number.	2 Registration number.	3 Title, with an English translation of the same when not in that language, the language of the book, and the subject.	4 Name of author, translator, or editor of the book, or any part of it.	5 Place of printing and publication.
		II.—ARABIC AND URDU—contd.		
		RELIGION.		
1	317	Dáfeúsh Sherk. Cure for Infidelity. (M.) ...	Eláhi Buksh	94, Calinga Bázár Street; 68, Mechhuá bázár Street; Calcutta ... ...
2	300A	Asrár-i-Haq. The Divine Truth. (M.) ...	Pír Ali Khán	30, Mott's Lane, Calcutta; Barrackpur.
3	252	Aleflám Sepárah. A Name. (M.) ...	Rafiuddin	55, Lower Chitpur Road, Calcutta ...
4	474	Tazkir-ul-Ekhwán Fi Khatbat-il-Jumuate be Kulle Lesán. Opinions of the friends of Islam on the Jumá sermon being in any language. (M.)	Abdul Jabbar	28, Dharmatalá Lane, Calcutta ...
5	470	Ershád-us-Sáilín Elál Masáil-is-Sálásin. Reply to the Thirty Questions put by an Enquirer. (M.)	Ditto	Ditto ditto ... ...
6	471	Islah-ut-Támáddún. A Critique on Támáddún (the name of a book). (M.)	Abdullá	Ditto ditto ... ...
		III.—ASSAMESE AND ENGLISH BOOKS.		
		LANGUAGE.		
		Educational—		
1	256	An Anglo-Assamese Word-Book ...	Golap Chandra Baruá	6, College Square, Calcutta; Assam ...
		IV.—BENGALI AND ENGLISH BOOKS.		
		LANGUAGE.		
		Educational—		
24	219	Children's Treasury of English Words ...	N. Ghosh	The Metcalfe Press, 3-4, Gaur Mohan Mukherji's Street; 57-1, College Street; Calcutta.
25	226	First English Primer	Súryya Kumár Adhikári	98, Harrison Road; 25, Cornwallis Street; Calcutta.
26	254	The Translation on a New Method ...	A. C. Banerji	17, Madan Mitra's Lane; 64, College Street; Calcutta.
27	332	The Beginner's Translation on a New Method.	Ditto	Ditto ditto ...
28	329	The Child's Own Book	Triguná Charan Sen	17, Madan Mitra's Lane; 65 College Street; Calcutta.
29	331	A Complete Key to the Royal Crown Readers. Third Book.	Asutosh Dev	22-2, Jhámápukur Lane, Calcutta ...
30	383	A Key to the National English Reader, Second Book.	.....	108, Báránasí Ghosh's Street; 54, College Street; Calcutta.
31	392	An English Spelling-Book with Reading Lessons.	Kumud Bandhu Basu	8, Dixon's Lane, Calcutta .. ...
32	423	A Comprehensive Key to the National English Reader. First Book.	H. C. Chatterji	78, Amherst Street; 11-5-1, Ráma Krishna Dás's Lane; Calcutta.
33	453	A Comprehensive Key to Sasadhar Sen's Lower Reader.	Tulasí Dás Mukherji	25, Guru Prasád Chaudhuri's Lane; 203-2, Cornwallis Street; Calcutta.
34	519	A Comprehensive Key to National English Readers. Second Book.	H. C. Chatterji	51-2, Sukea's Street; 11-5-1, Ráma Krishna Dás's Lane; Calcutta.
35	521	A Complete Key to the New Orient Readers. First Reader.	Hari Charan De	51-2, Sukea's Street; 19, Kárválá Tank Lane; Calcutta.
36	114	A Key to the Model English Reader, Part II	Upendra Lál Dás Gupta	Genderiya Press, Dacca ... ...
37	115	A Key to the Model Reader, Part I ...	S. Mukherji	Ditto ... ...
38	119	Ditto ditto. Part II ...	Ditto	Ditto ... ...
39	116	Beginner's English Grammar and Composition.	Pavitra Kumár Guha	Sudarsan Press, Dacca ... ...
40	121	A Key to B. Dhar's Model Spelling-Book ...	.....	Asutosh Press; Dacca ... ...
41	122	A Comprehensive Key to G. Datta's Moral Readings.	J. Datta	Vaikuntha Nath Press, Dacca ...
42	144	A Key to the Model English Reader. Part II.	Sarat Chandra Sen	Genderiya Press, Dacca ... ...
43	150	Model Key to English Readings. Part II.	.....	Dacca ... ...
44	159	A Complete Key to Model Selections. Part II	Yoges Chandra Datta	Isán Press, Dacca ... ...
		MISCELLANEOUS.		
45	162	Lahor Tribiun Patrikár Subikhyáta Sampádak Svargíya Sítalá Kánta Chattopádhyáyer Sankshipta Jívaní. A Short Life of the late Sitalá Kánta Chatterji the well-known Editor of the Lahore *Tribune*.	Nava Kánta Chatterji	Gopí Nath Press, Dacca ... ...
		Educational—		
46	632	Science Primer. For Standards I and II...	Rámendra Sundar Trivedí and Isán Chandra Ghosh.	64, Akhil Mistri's Lane, Calcutta ...
		RELIGION.		
47	4	Gítá-Traya. Three Gospels. (H.) ...	Yadu Náth Majumdár	The Hindu Patriká Press, Jessore ...
		V.—BENGALI AND SANSKRIT BOOKS.		
		Educational— LANGUAGE.		
36	633	Sáhityasárer Vyákhyá Chandriká. A Key to Sáhityasár	Rama Dayál Chatterji	10, Haladhar Barddhan's Lane; 58, Wellington Street; Calcutta.
37	426	Hitopadesah. Mitralábhah. Moral Instructions. Acquisition of Friends. (T.)	Satís Chandra Vidyáratna ...	30-5, Madan Mitra's Lane; 64, College Street; Calcutta.
38	600	Vyakaran Sudhakar. The Moon of Grammar. Part I.	Syámá Charan Kaviratna ...	2, Goábágán Street, Calcutta ...

Second Quarter ending 30th June 1902—continued.

6	7	8	9	10	11	12	13
Name or firm of printer and of publisher.	Date of issue from the press or of the publication.	Size and number of sheet, leaves, or pages.	Number of edition and number of copies of which the edition consists.	Printed or Litho'd	Price at which the book is sold to the public.	Name and residence of the proprietor of copyright, or any part of it.	Copyright registered or not.
	1902.				Rs. A. P.		
Muhammad Isráil; the author ...	Feb. 5	Rl. 8vo; 80	1st; 500	L.	0 5 0	The author, 68, Mechhuá Bazar Street, Calcutta.	
Háfez Mahammad Abdullá; Saikh Methu.	1901 Sep. 9	Dy. 8vo; 20	1st; 250	L.	0 8 0	Shaikh Methu, 23, Sadar Bázár, Barrackpur.	
Abdul Gafur	Jan. 7	Rl. 8vo; 45	1st; 1,000	L.	0 2 0	The author.	
Ziá-ur Rahman; Gani Ahmad ...	Feb. 19	Rl. 8vo; 20	1st; 500	L.	0 1 0	The author.	
Ditto ditto ...	Mar. 3	Rl. 8vo; 40	1s; 500	L.	0 3 0	Ditto.	
Ditto ditto ...	Feb. 26	Rl. 8vo; 36	1st; 600	L.	0 4 0	Ziá-ur Rahman.	
Nivárun Chandra Ghosh; the author.	Feb. 1	Dy. 16mo; 66	1st; 1,000	P.	0 6 0	The author.	
S. Bhattácháryya; A. K. Ráy & Co.	Jan. 14	Dy. 16mo; 101	3rd; 2,000	P.	0 4 0	N. Ghosh, Head Master, Sil's Free College, Calcutta.	
Kunja Vihári De; B. Banerjí & Co.	„ 6	D.cr. 16mo; 40	1st; 1,000	P.	0 2 0	The author, Murshidábád.	
Ramaní Mohan De; the City Book Society.	„ 18	D.fc.16mo; 161	3rd; 3,000	P.	0 8 0	A. C. Banerji, 64, College Street, Calcutta.	
U. C. Sámanta; the City Book Society.	Feb. 12	D.fc. 16mo; 64	2nd; 1,000	P.	0 4 0	Ditto ditto.	
Ramaní Mohan De; S. C. Basu . .	„ 17	D.fc. 16mo; 24	11th; 3,000	P.	0 2 0	The author, 65, College Street, Calcutta.	
Varadá Prasád Majumdár; Asutosh Deb.	„ 2	Dy. 12mo; 327	1st; 1,000	P.	0 12 0	Varadá Prasád Majumdár, 22-2, Jhámápukur Lane, Calcutta.	
N. B. Pál; Satya Charan De ...	„ 24	Dy. 12mo; 156	3rd; 1,250	P.	0 6 0	Satya Charan De, Sankar Ghosh's Street, Calcutta.	
B. L. Chakravartí	„ 15	Cr. 8vo; 50	1st; 2,000	P.	0 2 0	The author, Hugli.	
Hari Charan Mánná; the author ...	„ 9	D.cr. 16mo; 78	1st; 2,000	P.	0 5 0	Kesav Lál Chandhurí, the City Book Society, Calcutta.	
Lál Mohan Chatterji; the Manomohan Library.	Mar. 6	Dy. 12mo; 214	1st; 2,000	P.	0 12 0	The author, 27, Guru Prasád Chaudhuri's Lane, Calcutta.	
Hari Charan De; the author ...	Feb. 24	D.cr.16mo; 110	1st; 1,000	P.	0 6 0	.....	
Hari Charan De; the author ...	Mar. 3	Dy. 12mo; 144	1st; 2,000	P.	0 5 0	.....	
Bhánu Chandra Dás; the author ...	„ 12	Dy. 12mo; 150	1st; 1,000	P.	.....	.....	
Bhánu Chandra Dás; Hari Dás Basák.	„ 12	Dy. 12mo; 60	1st; 1,000	P.	0 12 0	.....	
Ditto Ditto ...	Apl. 2	Dy. 12mo; 173	1st; 1,000	P.	0 12 0	.....	
Nanda Kisor Basák; the author ...	Mar. 17	Dy. 12mo; 64	4th; 3,000	P	0 4 0	.....	
Printed by Rovatí Mohan Dás ...	„ 28	Dy. 12mo; 72	2nd; 1,000	P.	0 6 0	.... .	
Viharí Lál Datta; the Student's Library.	„ 28	Dy. 12mo; 72	1st; 2,000	P.	1 0 0	.....	
Bhánu Chandra Dás; Jagadís Chandra Sen	Apl. 16	Dy. 12mo; 56	1st; 250	P.	0 8 0	.....	
Madan Mohan Basák; Hari Rám Dhar.	May 2	Dy. 12mo; 224	1st; 1,000	P.	1 6 0	.....	
Mathurá Nath De	„ 25	Dy. 12mo; 298	1st; 750	P.	1 4 0	.....	
Gopí Náth Basák; Bhagaván Chandra Mukherji.	May 15	Dy. 12mo; 70	1st; 500	P.	0 8 0	.....	
Hári Dás Ghosh; Kedár Nath Basu	Apl. 1	D.cr. 16mo; 107	1st; 25	P.	0 3 0	Rámendra Sundar Trivedí, 6, William's Lane; and the publisher, 64, Akhul Mistri's Lane, Calcutta.	
K. P. Chatterji	June 19	Dy. 12mo; 24	1st; 250	P.	0 2 0	... ..	
U. C. Nandí; S. C. Adhya & Co. ...	Apl. 1	D.cr. 16mo; 180	1st; 2,000	P.	0 10 0	The publishers, 15, Haladhar Barddhan's Lane, Calcutta.	
Bhút Náth Pálit; Rajaní Kánta Sen	Mar. 1	Rl. 12mo; 285	New; 1,000	P.	0 12 0	The publisher, 64, College Street, Calcutta.	
Kunja Vihárí Dás	„ 5	Dy. 12mo; 120	1st; 1,000	P.	.....	The author, Sivpur, Howrah.	

1 Serial number.	2 Registration number.	3 Title, with an English translation of the same when not in that language, the language of the book, and the subject.	4 Name of author, translator, or editor of the book, or any part of it.	5 Place of printing and publication.
		BENGALI AND SANSKRIT BOOKS—continued.		
		MISCELLANEOUS.		
39	7	Nitya Sahachar. Every day Companion. (T).	Durgá Dás Ráy	The Vásantí Press, Mymensing ...
40	428	Bhavánipur Káhini. The Story of Bhawánipur (Name of a Place).	Tárini Charan Thákur ...	84, Musalmánpárá Lane, Calcutta ...
41	486	Máhishya Mímánsá. An Authoritative Expression of Opinion on the Máhishya Caste.	.....	336, Upper Chitpur Road; 71, Free School Street, Calcutta.
42	585	Játi-Vivek. A Discriminating Knowledge of Hindu Castes.	Kailás Chandra Háldár ...	20, Cornwallis Street, Calcutta; Rangilávád, 24-Parganas.
43	674	Sánuvád Vrihat Sámudrik. Palmistry with a Translation, enlarged. (T.)	.....	127, Masjidbári Street, Calcutta ...
44	675	Charitránumán Vidyá. "Aryan Physiognomy and Phrenology." Part I. (T.)	Kálivar Vedántavágisa ...	Ditto ditto ...
45	8	Mursidávád Káyastha Samiti. The Káyastha Association of Mursidávád.	Nikhil Náth Ráy	Saidávád, Berhampur ... ...
		RELIGION.		
46	433	Srímad Bhagavatí Gítá. Lays about Bhagavatí (the Goddess Durgá). (T.) (H.)	Nava Kumár Datta	133, Masjidbári Street; 3-1, Nilamani Mitra's Street, Calcutta.
47	33	Vásishtha Maháramáyanam. The Great Rámáyana by Vasishtha. No. 70. (T) (H.)	Kálivar Vedántavágisa ...	214, Bowbazar Street, Calcutta ...
48	459	Satkarmánushthán. Practice of Good Acts. (T.) (H.)	Púrna Chandra Sarkár ...	323; 106; Upper Chitpur Road, Calcutta
49	598	Ahnikakrityam. Practice of Daily Religious Rites. (T.) (H.)	Syámá Charan Kavíratna ...	2, Goabágán Street, Calcutta ...
50	661	Sivarátri Vrata Kathá. Story of the Vow in honour of the god Siva known as *Sivarátri*. (T.) (H.)	Yogendra Náth Kávyavinod ...	25, Pataldángá Street; Entali, Calcutta.
51	700	Sachitra O Sánuvád Kásímukti Vivek Prakaranam. The Chapter on the Discriminating Knowledge of Salvation (obtained by death) at Kásí with Illustration and Translation. (T.) (H.)	Paramhansa Parivrájak Srímat Sureswaráchárya.	115, Muktárám Babu's Street, Calcutta; Kásí (Benares).
52	21	Dán Vishaye Aryya Sástrer Mat. The Opinion of the Aryan *Sástras* on the subject of Gifts. (H.)	Sankar Náth Pandit	62, Sambhu Náth Pandit's Street, Bhawanipur.
53	100	Átma Tattva O Pancha Tattva Granthah. The Book treating of Truths about the Self and the Five Principles. (H.)	Syám Sundar Gosvámí	Dacca ... .
54	35	Adhyátmik Kirana Prakás. The Manifestation of Spiritual Rays. (H).	Srímatí Kiranbálá Gánguli	81, Chakraberiá Road, Baliganj, Calcutta; Cawnpur.
55	8	Uday Dípiká. The Rising of the Light. (H.)	Atul Chandra Chakravartí ...	Mymensing ... ...
56	27	Srímadbhágavatam. The Book of the Lord Parts 74 and 75 (together). (T.) (H.)	Khagendra Náth Sástrí ...	The New Town Press, Bhawanipur ..
57	33	Ditto ditto Nos. 76 and 77 (together). (T). (H.)	Ditto ...	Ditto ditto ...
58	37	Ditto ditto Nos. 78 to 80 (together). (T.) (H.)	Ditto ...	Ditto ditto ...
59	5	Padma Purána. The Name of a Purána. (T.) (H)	Rám Náráyan Vidyáratna ...	Berhampur ... ...
		VI.—ENGLISH AND HINDI BOOKS.		
		LANGUAGE.		
		Educational—		
2	236	A Complete Key to Stapley's Translation Exercises. Part I.	P. L. Agnihatri ..	108, Báránasí Ghosh's Street, Calcutta; Allahabad.
		VII.—ENGLISH AND SANSKRIT BOOKS.		
		LANGUAGE		
		Educational—		
3	271	The Hitopadesa-Mitralábha. Good Instruction. Acquisition of Friends.	Kshirod Chandra Ráy	64, Akhil Mistri's Lane, Calcutta ...
4	21	Select Questions with Answers on Pravesiká (1902-1903, &c.).	Upendra Náth Vidyábhúshan ..	78 Amherst Street, Calcutta ...
		MISCELLANEOUS.		
5	5	The World's Desire	.....	The Ráy Press, Bogra ... ...
		SCIENCE (MATHEMATICAL).		
6	283	Bhagola Chitram. "An Atlas of Hindu Astronomy with Key and Notes."	Kálináth Mukherji	5 & 6, Government Place, Calcutta ...
		VIII.—HINDI AND SANSKRIT BOOKS.		
		MISCELLANEOUS.		
4	10	Srí Haris Chandra Kalá. Works by Haris Chandra. Samvat 1958. No. 6. (R.)	Rámdin Sinha	The Khadgavilás Press, Bankipur ...
5	1	Prátahsmaranam. Remembering in the Morning.	Svámí Hansa Svarup	Muzaffarpur .. ..
		IX.—PERSIAN AND URDU BOOKS.		
		LANGUAGE.		
		Educational—		
1	318	Miftáh-ul Muntakhabát. A Key to the (new) Selection (for the Entrance examination).	Mír Mahammad	94, Collinga Bazar Street; 3, Maulvi's Lane, Calcutta.

Second Quarter ending 30th June 1902—continued.

6	7	8	9	10	11	12	13
Name or firm of printer and of publisher.	Date of issue from the press or of the publication.	Size and number of sheets, leaves, or pages.	Number of edition and number of copies of which the edition consists.	Printed or litho'd.	Price at which the book is sold to the public.	Name and residence of the proprietor of copyright, or any part of it.	Copyright registered or not.
	1902.				Rs. A. P.		
Ráma Chandra Ananta; the author	May 10	Dy. 12mo; 21	1st; 1,000	P.	0 2 0	..	
K. C. Basu	Feb. 16	Dy. 8vo; 185	1st; 1,000	P.	.....	The author, Barra Thákur bárí.	
Nílamani Dhar; Trailakya Náth Visvás.	„ 22	Dy. 8vo; 10	1st; 1,000	P.	.....	.....	
Umes Chandra Nág; the author ...	Mar. 23	Dy. 8vo; 142	2nd; 2,000	P.	1 0 0	The author; Rungilávád, 24-Parganas.	
Dína Náth Mánná; Basák & Sons	Apl. 10	Dy. 8vo; 152	1st; 1,000	P.	1 8 0	Basak & Sons, 127, Masjidbárí Street, Calcutta.	
Ditto ditto ...	„ 2	Dy. 12mo; 78	2nd; 2,000	P.	0 8 0	The author, 24-Parganas.	
Shasibhusan Ghosh; the author ..	Feb. 21	Dy. 8vo; 52	1st; 250	P.	.....	.....	
Yogendra Nath Chakravartí; the author.	Feb. 24	Dy. 12mo; 36	1st; 750	P.	0 8 0	The author, 31, Nilamani Mitra's Street, Calcutta.	
Asutosh Gar; Nandu Lál Pál ..	Jan. 29	Dy. 8vo; 48	1st; 1,000	P.	0 6 0	The publisher, 214, Bowbazar Street, Calcutta.	
Nrisinha Kumár Ghosh; Panchánan Ghosh.	Mar. 4	Dy. 12mo; 36	1st; 1,000	P.	0 3 0	The publisher, 106 Upper Chitpur Road; Calcutta.	
Kunja Vihárí Dás	„ 8	Dy. 12mo; 153	5th; 2,000	P.	0 3 0	The author, Sibpur, Howrah.	
Kálipada Chakravartí; Kálikamal Nyáyratna.	Apl. 6	Dy. 12mo; 40	1st; 1,000	P.	0 3 0	The author.	
Sasibhúshan Ghosh; Pyárí Mohan Mustaphi.	„ 29	Dy. 8vo; 31	2nd; 1,000	P.	0 6 0	The publisher.	
Gorá Chánd Chakravartí; the author	„ 1	Dy. 8vo; 16	1st; 1,000	P.	0 1 0	The author, 62, Sambhunáth's Pandit's Street Bhawanipur.	
Gopí Náth Basák; Ananda Chandra Nág.	May 3	 16	1st; 2,000	P.	0 4 0	.....	
S. C. Mukhorji the authoress. ...	June 10	Dy. 12mo; 138	1st; 500	P.	0 8 0	The authoress, S. P. G. Mission, Cawnpur.	
Ráma Chandra Ananta ...	„ 22	Dy. 12mo; 20	1st; 500	P.	0 2 0	.....	
Manmatha Náth Mitra; the translator.	Apl. 2	Rl. 8vo; 64	1st; 1,000	P.	0 4 0	The translator, 57, Balarám Basu's Ghát Road, Bhawanipur	
Ditto ditto ..	May 3	Rl. 8vo; 64	1st; 1,000	P.	0 4 0	Ditto ditto	
Ditto ditto ...	June 2	Rl 8vo; 96	1st; 1,000	P.	0 6 0	Ditto ditto.	
Rádhá Ballabha Nandí; the Translator.	Mar. 26	Dy. 4 to 40	1st; 1,000	P.	0 12 0	.....	
N. C. Pál; the School Book Depôt ...	Jan. 22	Dy. 12mo; 41	1st; 1,000	P.	0 2 0	The author	
Haridás Ghosh; Kedár Náth Basu ...	Jan. 27	D.cr.16mo; 94	1st; 1,000	P.	0 8 0	Kedár Náth Basu, 64, Akhil Mistri's Lane, Calcutta.	
Hari Charan Mánná; Bhútnáth Mitra.	Mar. 1	D.cr.16mo; 76	1st; 1,000	P.	0 8 0	The author, City College; and B. N. Mitra, 78; Amherst Street, Calcutta.	
S. Jamiruddín; J. K. Majumdár ..	May 18	 12	1st; 200	P.	.....	.....	
Thacker, Spink & Co.	Feb. 8	Rl. 4to; 20	1st; 100	P.	3 0 0	The author, Jessore.	
Chandí Prasád Sinha	Apl. 3	Rl. 12mo; 91	1st; 200	P.	6 0 0 Yearly.	Rámdan Sinha, Khadgavilás Press, Bankipur.	
Rám Lál	„ 17	Dy. 8vo; 24	1st; 1,000	P.	0 2 0	.....	
Mahammad Isráil; Shamsul Ulmá Maulví Ahmed.	Feb. 18	Dy. 8vo; 208	1st; 1,000	P.	1 0 0	The publisher.	

1 Serial number.	2 Registration number.	3 Title with an English translation of the same when not in that language, the language of the book, and the subject.	4 Name of author, translator, or editor of the book, or any part of it.	5 Place of printing and publication.
		X.—SANSKRIT AND URIYA BOOKS.		
		MISCELLANEOUS.		
7	90	Mrityukála Jnán. Knowledge of the Time of Death.	Kapileswar Vidyábhúshan ...	The Arunoday Press, Cuttack ...
8	92	Upadesagarbhaka Anyápadesa Sloka Satakam. A Century of moral Verses written for some purpose other than the ostensible one.	Govínda Chandra Mahápátra ...	The Cuttack Printing Company's Press, Cuttack.
		RELIGION.		
9	62	Vasanta Rása. The Rása Sports in Spring. (H.)	Srichandan	The Arunaday Press, Cuttack ...
10	63	Srímadbhágavat. Ekádasa Skandha. The Book of the Lord. Book XI. (T.) (H.)	Jagannáth Dás	The Ráy Press, Cuttack ... ...
		TRI-LINGUAL BOOKS.		
		I.—BENGALI, ENGLISH AND SANSKRIT BOOKS.		
		HISTORY (INCLUDING GEOGRAPHY).		
10	238	Pundaríkakulakírtti Panjiká. The Register of the Famous Deeds of the Family of Pundaríka.	Rámendra Sundar Trivedí ...	64, Akhil Mistri's Lane, Calcutta; Rájabáti Jemo.
		LANGUAGE.		
		Educational—		
11	272	Mitabháshiní. A Key to the Sanskrit Entrance Course for 1903 and Subsequent years.	Sáradá Ranjan Ráy	64, Akhil Mistri's Lane, Calcutta ...
12	278	Pravesiká Sandípaní. " A Complete Key to the Sanskrit Entrance Course for 1903 and Subsequent years."	Kunjalál Nág	Ditto ditto ...
13	359	Nitimanjarí Darpanah. A Key to Nítimanjarí.	Syámácharan Kavibhúshan ...	2, Goábágán Street; 57, College Street, Calcutta.
14	422	Anuváda Manjarí. "A Short Treatise on Sanskrit Translation and Composition."	Upendra Nath Vidyábhúshan ...	78, Amherst Street; 21-11-1, Nawábdi Ostágar's Lane; Calcutta ...
15	523	Prathamabhág Sanskrita Sikshá Sopán Saháy. A Key to Sanskrita Sikshá Sopán, Part I.	Parameswar Siromani	51-2, Sukea's Street; 19, Kárbálá Lane; Calcutta.
16	693	Níti Bodhini. " A complete Key to Nítimanjarí."	Rájkumár Tarkaratna	2, Goábágán Street, Calcutta, Bhagalpur.
17	673	A Key to the Sanskrit Entrance Course, 1904. Part I.	Navín Chandra Vidyáratna ...	12-1, Ráma Krishna Dás's Lane; 63, College Street; Calcutta.
18	„	Ditto ditto. Part II ...	Ditto ditto	Ditto ditto
		II.—ENGLISH, HINDI AND URDU BOOKS.		
		LANGUAGE.		
		Educational—		
1	12	The Child's Help. Part I	Vishnu Datta Tripáthí	Gayá ... ...
		III.—ENGLISH, PERSIAN AND URDU BOOKS.		
		LANGUAGE.		
		Educational—		
1	2	Qawáid-us Sibíyán. Child's Grammar ...	Benarasi Lál	The Star of India Press, Arrah ...
		QUADRI-LINGUAL BOOKS.		
		I.—BENGALI, ENGLISH, HINDI AND URDU BOOKS.		
		LANGUAGE.		
		Educational—		
1	3	A Hand-Book of Translations. Part I ...	J. C. Sen	The Crown Press, Motihári ... ...
2	3	Ditto ditto. Part II ...	Ditto	Ditto ditto ...
		POLY-LINGUAL BOOKS.		
		I.—ASSAMESE, BENGALI, CACHARI, HINDI, KACHA NAGA, KHASI, KUKI, LUSHAI, MANIPURI, MIKIR, SANTALI, URDU, AND URIYA BOOKS.		
		RELIGION.		
1	905	The Lord's Prayer in the Languages spoken in Cachar, Assam, India. Also a few Hymns.	Compiled by T. J. Jones	41, Lower Circular Road, Calcutta; Silchar.
		UNI-LINGUAL PERIODICALS.		
		I.—BENGALI PERIODICALS.		
		ART.		
96	262	Alápiní. The Lute. A monthly paper. Vol. III. Nos. 7, 8 and 9 (together).	Edited by Manomata Dhan De ...	3, Ramá Náth Majumdár's Street, Calcutta.
97	683	Ditto ditto. Vol. III. Nos. 10 and 11 (together).	Ditto ditto ...	Ditto ditto ...
98	282	Sangíta Prakásiká. Expounder of Music. A monthly paper. Vol. I. No. 5	Edited by Jyotirindra Náth Tagore	55, Upper Chitpur Road; Cornwallis Street; Calcutta.

Second Quarter ending 30th June 1902—continued.

6	7	8	9	10	11	12	13
Name or firm of printer and of publisher.	Date of issue from the press or of the publication	Size and number of sheets, leaves, or pages.	Number of edition and number of copies of which the edition consists.	Printed or litho'd.	Price at which the book is sold to the public.	Name and residence of the proprietor of copyright, or any part of it.	Copyright registered or not.
	1902.				Rs. A. P.		
Madhu Súdan Datta	May 3	Dy. 12mo; 10	3rd; 1,000	P.	0 1 0	The printer and others, Cuttack.	
Bhágírathí Sethiyá; the Cuttack Printing Company's Press.	May 31	Dfc. 16mo; 42	1st; 1,000	P.	0 1 6	The author, Nayágar, Cuttack.	
Govinda Rath	April 3	Dy. 8vo; 128	2nd; 1,000	P.	0 12 0	Govinda Rath, Bánki Páthpur, Cuttack.	
S. B. Ráy	Mar. 22	Dy. 12mo; 242	1st; 2,000	P.	0 7 0	S. B. Ráy, Kálígali, Cuttack.	
Haridás Ghosh; the author .	Jan. 15	Dy. 8vo; 88	1st; 500	P.	1 0 0	The author, 6, William's Lane, Calcutta.	
Haridás Ghosh, Kedárnáth Basu ..	Feb. 2	Dcr. 16mo; 548	1st; 2,000	P.	1 8 0	Kedárnáth Basu, 64, Akhil Mistri's Lane, Calcutta.	
Ditto ditto ...	Jan. 9	Dy. 12mo; 694	1st; 2,000	P.	1 8 0	Ditto ditto.	
Kunja Vihárí Dás; G. C. De and Brothers.	Feb. 12	Dy. 12mo; 224	1st; 1,000	P.	1 12 0	The publisher, 57, College Street, Calcutta.	
Haricharan Mánná; the author ...	Jan. 7	Dy. 12mo; 76	1st; 1,000	P.	0 5 0	The author.	
Haricharan De; the author ...	Mar. 10	Dy. 12mo; 84	1st; 1,000	P.	0 6 0	.....	
Kunja Vihárí Dás; Brajendra Kumár Ghosh.	„ 8	Dy. 12mo; 106	1st; 1,000	P.	0 10 0	The author, Bhagalpur.	
S. C. Bhattácháryya; S. C. Bhattácháryya & Co.	„ 27	Dy. 12mo; 444	1st; 2,000	P.	1 8 0	Sashthí Charan Bhattácháryya, 63, College Street, Calcutta.	
Ditto ditto	„ 27	Dy. 12mo; 412	1st; 2,000	P.	1 8 0	Ditto ditto.	
Harihar Prasád	Apl. 1	Dy. 8vo; 92	1st; 1,000	P.	0 5 0	The author.	
Zahurul Haq, the author ...	1901 Sept. 1	Dy 8vo; 100	1st; 1,000	L	0 8 0	Benarasí Lál, Pleader, Arrah.	
	1902						
Mákhan Lál Basu	Apl. 26	Dy. 8vo; 107	1st; 2,000	P.	0 8 0	The author; Head Master, High English School, Sítámárí.	
Ditto	Apl. 26	Dy. 8vo; 64	1st; 2,000	P.	0 8 0	Ditto ditto.	
Rev. C. H. Harvey; the editor ...	Feb. 10	Dy. 16mo; 16	1st; 5,000	P.	..	. ...	
K. P. Náth	Jan 26	Dy 4to; 20	1st; 500	P.	2 0 0	The editor, 83, Upper Circular Road Calcutta.	
Ditto	Apl. 10	Dy. 4to; 16	1st; 500	P.	...	Ditto ditto.	
Devendra Náth Bhattácháryya; The Bhárat Sangít Samáj.	Jan. 17	Dy. 4to; 12	1st; 500	P	0 6 0	The editor, 6, Dvárká Náth Tagore's Lane, Calcutta.	

1 Serial number.	2 Registration number.	3 Title, with an English translation of the same when not in that language, the language of the book, and the subject.	4 Name of author, translator, or editor of the book, or any part of it.	5 Place of printing and publication.
		I.—BENGALÍ PERIODICALS—contd.		
		ART—*concld.*		
99	434	Sangíta Prakásiká. Expounder of Music. A monthly paper. Vol. I, No. 6.	Edited by Jyotirindra Náth Tagore	55, Upper Chitpur Road, Calcutta ...
100	565	Ditto ditto. Vol. I. No. 7 ...	Ditto ditto	Ditto ditto ...
		LAW.		
101	351	Indiyán La Riports. Indian Law Reports. For July, 1901.	Edited by Hem Chandra Mitra ..	309, Upper Chitpur Road; 29, Hujurimal's Lane; Calcutta.
102	„	Ditto ditto. For August, 1901 ...	Ditto ditto ...	Ditto ditto ...
103	664	Ditto ditto. For September and October, 1901 (together).	Ditto ditto ...	Ditto ditto ...
104	617	Ditto ditto. For November, 1901	Ditto ditto ...	Ditto ditto ...
105	„	Ditto ditto. For December, 1901	Ditto ditto ...	Ditto ditto ...
		MEDICINE.		
106	346	Bhishak Darpan. Mirror for Physicians. A monthly paper. Vol. XI. No. 12.	Edited by Dr. Káli Mohan Sen and Giris Chandra Bágchi.	25-1, Scott's Lane, Calcutta .. ...
107	497	Ditto ditto. Vol. XII. No. 1 ...	Ditto ditto ...	Ditto ditto ...
108	286	Saral Homiopyáthi. Easy Homœopathy. A monthly paper. Vol. I. No. 12.	Edited by Vipin Vihárí Chatterji and Nripendra Náth Set.	29, Beadon Street; 83, Harrison Road Calcutta.
109	641	Ditto ditto. Vol. II. No. 1 ...	Ditto ditto ...	Ditto ditto ...
		MISCELLANEOUS.		
110	516	Antahpur. Inner Apartments. A monthly paper. 4th year. No. 1.	Edited by Srímatí Homanta Kumárí Chaudhurí.	17, Madan Mitra's Lane; 208, Cornwallis Street; Calcutta.
111	„	Ditto ditto. 4th year. No. 2	Ditto ditto ...	Ditto ditto ...
112	692	Ditto ditto. 4th year. No. 5	Ditto ditto ...	Ditto ditto ...
113	„	Ditto ditto. 4th year. No. 6	Ditto ditto ...	Ditto ditto ...
114	276	Ditto ditto. 4th year. No. 9	Ditto ditto ...	211; 208; Cornwallis Street, Calcutta...
115	275	Ditto ditto. 4th year. No. 10	Ditto ditto ...	211; 20; Cornwallis Street, Calcutta ...
116	231	Ditto ditto. 4th year. No. 11	Ditto ditto ...	Ditto ditto ...
117	449	Ditto ditto. 4th year. No. 12	Ditto ditto ...	211; 208-2; Cornwallis Street, Calcutta
118	542	Ditto ditto. 5th year. No. 1	Ditto ditto ...	17, Madan Mitra's Lane; 208, Cornwallis Street; Calcutta.
119	488	Alochaná. Investigation. A monthly paper. 5th year, Nos. 9 and 10 (together).	Edited by Yogíndra Náth Chatterji	386, Upper Chitpur Road, Calcutta; the Alochana Office; Howrah.
120	342	Árati Worshipping with Light. A monthly paper. Vol. II. Nos. 3 and 4 (together).	Edited by Sáradá Charan Ghosh,	25-1, Scott's Lane, Calcutta; Mymensingh.
121	444	Ditto ditto. Vol. II. No. 5	Ditto ditto ...	98, Harrison Road, Calcutta; Mymensingh.
122	445	Ditto ditto. Vol. II. Nos. 6 and 7 (together).	Ditto ditto ...	Ditto ditto ...
123	155	Áryya Gaurav. Aryan Glory. A monthly paper. Vol. I. No. 1.	Edited by Umes Chandra Basu ...	The Raghunáth Press, Máhuttúlí; 26, Pánitolá Street, Dacca.
124	143	Bándhav. Friend. A monthly paper. Vol. I, No. 2.	Edited by Kálí Prasanna Ghosh ...	The Giris Press, Dacca ... ...
125	146	Ditto ditto. Vol. I. No. 3	Ditto ditto ...	Ditto ... ...
126	446	Bhárati. The Goddess of Speech. A monthly paper. Vol. XXV. No 10.	Edited by Srímatí Saralá Devi ...	115, Amherst Street; 26, Baliganj Circular Road; Calcutta.
127	384	Ditto ditto. Vol. XXV. No. 11	Ditto ditto ...	10, Haladhar Barddhan's Lane; 26, Baliganj Circular Road; Calcutta.
128	628	Ditto ditto. Vol. XXV. No. 12	Ditto ditto ...	Ditto ditto
129	280	Chhátra. Student. A fortnightly paper. 3rd year. No. 10.	.....	13, Hara Chandra Mallik's Lane; 166, Mániktalá Street; Calcutta.
130	487	Janma Bhúmi. The Land of Birth. A monthly paper. Vol. X. No. 7.	.....	336, Upper Chitpur Road; 39, Mánik Basu's Ghát Street; Calcutta.
131	546	Jnánadáyiní. Giver of Knowledge. A monthly paper. 1st year. No. 2.	Edited by Surendra Náth Gosvámí	107, Cornwallis Street, Calcutta; Sinthi, Jnána Dáyiní Samiti, Kásipur, 24 Parganas.
132	2	Kalyání. Auspicious. A monthly paper. Vol. I. Nos. 6 and 7 (together).	Edited by Visvesvar Mukherji ...	Khulna; Mágura, Jessore ... ...
133	439	Mahájana Bandhu. "The Marchant's Friend." A monthly paper. Vol. I. Nos. 9, 10, 11 and 12 (together).	Ráj Krishna Pál	66, Ahírítolá Street; 1, Chinipati, Barabázár; Calcutta.
134	261	Mahilá. Lady. A monthly paper. Vol. VII. No. 6.	Edited by Rev. G. C. Sen ...	3, Ramá Náth Majumdar's Street, Calcutta.
135	299	Ditto ditto. Vol. VII. No. 7	Ditto	Ditto ditto ...
136	531	Ditto ditto. Vol. VII. No. 8	Ditto	Ditto ditto ...
137	684	Ditto ditto. Vol. VII. No. 9	Ditto	Ditto ditto ...
138	310	Mukul. Blossom. A monthly paper. Vol. VII. Nos. 9 and 10 (together).	Edited by Siva Náth Sástrí ...	5, Siva Náráyan Dás's Lane; 208-2, Cornwallis Street; Calcutta.
139	451	Ditto ditto. Vol. VII. No. 11	Edited by Hem Chandra Sarkár ...	211; 208; Cornwallis Street, Calcutta
140	345	Nava Prabhá. New Light. A monthly paper. Vol. I. No. 12.	Edited by Jnánendra Lál Ráy and Harendra Lál Ráy.	25-1, Scott's Lane; 16, Chandra Náth Chatterji's Street; Calcutta.
141	596	Nava Pratibhá. New Light. A monthly paper, Vol. I. No. 2	Edited by Manoranjan Banerji ...	1, Chárakdángá Street, Calcutta; Garden Reach.

Second Quarter ending 30th June 1902—continued.

6	7	8	9	10	11	12	13
Name or firm of printer and of publisher.	Date of issue from the press or of the publication.	Size and number of sheet, leaves, or pages.	Number of edition and number of copies of which the edition consists.	Printed or litho'd.	Price at which the book is sold to the public.	Name and residence of the proprietor of copyright, or any part of it.	Copyright registered or not.
	1902.				Rs. A. P.		
Devendra Náth Bhattácháryya ...	Feb. ...	Dy. 4to; 16	1st; 500	P.	0 4 0	The editor, 6, Dváraká Náth Tagore's Lane, Calcutta.	
Ditto ditto ...	Mar. 15	Dy. 4to; 12	1st; 500	P.	0 4 0	Ditto ditto.	
Chaturbhuj Bhattácháryya; Rám Chandra Sarkár.	Jan. 24	Rl. 8vo; 20	1st; 350	P.	0 10 0	.....	
Ditto ditto ...	„ 24	Rl. 8vo; 20	1st; 350	P.	0 10 0	.....	
Ditto ditto ...	Feb. 9	Rl. 8vo; 20	1st; 350	P.	0 10 0	.....	
Ditto ditto ...	Mar. 11	Rl. 8vo; 20	1st; 350	P.	0 10 0	.....	
Ditto ditto ...	„ 11	Rl. 8vo; 20	1st; 350	P.	0 10 0	.....	
Sányál & Co.	Feb. 1	Rl. 8vo; 44	1st; 400	P.	6 0 0 (yearly).	Giris Chandra Bágchi, Akhil Mistri's Lane, Calcutta.	
Ditto ditto ...	Mar. 12	Rl. 8vo; 44	1st; 400	P.	6 0 0 (yearly).	Ditto ditto.	
S. K. Shaw; King & Co. ...	Feb. 7	Dy. 8vo; 24	1st; 500	P.	.....	.....	
Ditto ditto	Mar. 12	Dy. 8vo; 24	1st; 500	P.	.....	.....	
	1901						
N. C. Hájrá; Sasi Bhúsan Chakravarttí.	Feb. 6	Rl. 8vo; 24	1st; 2,000	P.	1 8 0 (yearly).	The publisher, 208, Cornwallis Street, Calcutta.	
Ditto ditto ...	Apl. 12	Rl. 8vo; 24	1st; 2,100	P.	1 8 0 (yearly).	Ditto ditto.	
Ramaní Mohan De; Sasibhusan Chakravartí.	Sep. 12	Rl. 8vo; 24	1st; 2,000	P.	1 8 0 (yearly).	Ditto ditto.	
Ditto ditto ...	„ 12	Rl. 8vo; 24	1st; 2,000	P.	1 8 0 (yearly).	Ditto ditto.	
Kárttik Chandra Datta; Sasibhúsan Chakravarttí.	Oct. 19	Rl. 8vo; 24	1st; 2,000	P.	0 4 0	Ditto ditto.	
Ditto ditto ...	Nov. 8	Rl. 8vo; 24	1st; 2,000	P.	0 4 0	Ditto ditto.	
	1902						
Ditto ditto ...	Jan. 14	Rl. 8vo; 24	1st; 1,500	P.	0 4 0	Ditto ditto.	
Ditto ditto ...	Mar. 2	Rl. 8vo; 24	1st; 1,500	P.	0 4 0	The publisher, 208-2, Cornwallis Street, Calcutta.	
Ramaní Mohan De; Sasibhúsan Chakravarttí.	„ 19	Rl. 8vo; 24	1st; 1,950	P.	1 8 0 (yearly).	The publisher, 208, Cornwallis Street, Calcutta.	
Nílamani Dhar; D. D. Sarmá and Sons.	Feb. 24	Dy. 8vo; 32	1st; 250	P.	0 1 6	.....	
Sányál & Co.; the editor ...	Jan. 30	Dy. 8vo; 40	1st; 1,000	P.	0 4 0	Kedár Nath Majumdár, Mymensingh.	
Kunja Vihárí De; The Mymensingh Sáhitya Sabhá.	Feb. 26	Dy. 8vo; 40	1st; 1,000	P.	0 3 0	The editor, Mymensingh.	
Ditto ditto ...	Mar. 3	Dy. 8vo; 40	1st; 1,000	P.	0 6 0	Ditto ditto.	
	1901						
Munsi Kalimuddin; Vrajendra Náth Mitra.	Oct. 16	Dy. 8vo; 32	1st; 1,100	P.	0 3 0	.....	
	1902						
Harihar Nandí	May 25	Rl. 8vo; 48	1st; 1,500	P.	0 8 0	.....	
Ditto	„ 14	Rl. 8vo; 48	1st; 1,500	P.	0 8 0	.....	
Náráyan Chandra Ghosh; Vírendra Náth Chakravarttí.	Feb. 15	D.cr. 16mo; 92	1st; 1,250	P.	0 6 0	The editress, 26, Báliganj Circular Road, Calcutta.	
U. C. Nandí; Vírendra Náth Chakravartti.	Feb. 13	D.cr. 16mo; 112	1st; 1,250	P.	0 6 0	Ditto ditto.	
Ditto ditto ...	Mar. 25	D.cr. 16mo; 104	1st; 1,250	P.	0 8 0	Ditto ditto.	
Náráyan Chandra Hájrá; Ghanendra Náth Basu.	Jan. 25	Dy. 8vo; 16	1st; 500	P.	0 1 0	Satyendra Náth Mitra, 166, Mániktalá Street, Calcutta.	
Nílamani Dhar; Narendra Náth Datta.	Feb. 26	Dy. 8vo; 32	1st; 1,000	P.	0 2 6	.....	
Yadú Náth Sil; Kedár Náth Misra	Mar. 2	Dy. 8vo; 24	1st; 250	P.	0 1 6	The editor, South Sinthi, Cossipur, 24-Parganas.	
Aghor Náth Ráy; Visvesvar Mukherji.	Apl. 7	Dy. 8vo; 56	1st; 1,000	P.	0 4 0	.....	
Rájendra Nath Sen; Satya Charan Pál.	Feb. 12	Dy. 8vo; 96	1st; 500	P.	0 8 0	The editor, 1, Chinipati, Barabázár, Calcutta.	
K. P. Náth	Jan. 17	Rl. 8vo; 32	1st; 350	P.	2 0 0 (yearly).	The Bráhmo Mission Office, 3, Ramá Náth Majumdár's Street, Calcutta.	
Ditto	Feb. 17	Rl. 8vo; 32	1st; 350	P.	2 0 0 (yearly).	Ditto ditto.	
Ditto	Mar. 17	Rl. 8vo; 32	1st; 350	P.	2 0 0 (yearly).	Ditto ditto.	
Ditto	Apl. 16	Rl. 8vo; 32	1st; 350	P.	2 0 0 (yearly).	Ditto ditto.	
Púrna Chandra Dás; Giris Chandra Naskar.	Feb. 2	D.cr. 8vo; 32	1st; 1,000	P.	1 8 0 (yearly).	The Mukul Committee, 208-2, Cornwallis Street, Calcutta.	
Kárttik Chandra Datta; Giris Chandra Naskar.	Mar. 10	D.cr. 8vo; 16	1st; 1,000	P.	0 4 0	Mrs. M. M. Basu, 189, Dharmatalá Street, Calcutta.	
Sányál & Co.; Banendra Lál Ráy	Feb. 12	Dy. 8vo; 52	1st; 500	P.	0 4 0	Jnánendra Lál Ráy, 16, Chandra Náth Chatterji's Street, Calcutta.	
The Calcutta Press Company; Atul Krishna Chatterji.	Mar. 10	D.cr. 16mo; 40	1st; 500	P.	0 2 0	The editor, Garden Reach.	

1	2	3	4	5
Serial number.	Registration number.	Title, with an English translation of the same when not in that language, the language of the book, and the subject.	Name of author, translator, or editor of the book, or any part of it.	Place of printing and publication.
		I.—BENGALI PERIODICALS—contd.		
		MISCELLANEOUS—*contd.*		
142	595	Nava Pratibhá. New Light. A Monthly paper Vol. I. Nos. 3 and 4 (together).	Edited by Manoranjan Banerji ...	1, Charakdángá Street; Calcutta, Garden Reach.
143	425	Navya Bhárat. New India. A monthly paper. Vol. XIX. No. 11.	Edited by Devi Prasanna Ráy Chaudhurí.	30-5, Madan Mitra's Lane; 210-4, Cornwallis Street; Calcutta.
144	654	Ditto ditto. Vol. XIX. No. 12.	Ditto ditto ...	Ditto ditto ...
145	255	Navya Vanga. New Bengal. Vol. I. No. 7	Edited by Pánch Kari Ráy and Asutosh Mukherjí.	79-3-2-3, Cornwallis Street, Calcutta; 50, Basak's Street, Baráhanagar, 24-Parganas.
146	609	Ditto ditto. Vol. I. No. 8	Ditto ditto ..	Ditto ditto .
147	347	Nirmálya. Remains of an Offering to a Deity. A monthly paper. 4th year. No. 5	Edited by Ramá Nath Chakravarttí	25-1, Scott's Lane, Calcutta ...
148	288	Panthá. Path. A monthly paper. Vol. V. No. 8.	Edited by Krishna Dhan Mukherji and Hírendra Nath Datta.	1, Swallow Lane; 120-2, Musjidbari Street; Calcutta.
149	289	Ditto ditto. Vol. V. No. 9 ...	Ditto ditto ...	Ditto ditto ..
150	601	Prachárak. The Preacher. A monthly paper. 3rd year. Nos. 10 and 11 (together).	Edited by Madhu Miyán ...	17, Nanda Kumár Chaudhuri's 2nd Lane, Calcutta; Byátor, Howrah.
151	348	Pradípa. Lamp. A monthly paper. Vol. V. No. 1.	Edited by Vaikuntha Náth Dás ...	25-1, Scott's Lane; 208-2, Cornwallis Street; Calcutta.
152	691	Prakriti. Nature. A monthly paper. 2nd year. No. 3.	Edited by Amúlya Charan Sen ...	17, Madan Mitra's Lane; 9, Kedár Náth Datta's Lane; Calcutta.
153	,,	Ditto ditto. 2nd year. No. 4.	Ditto ditto ...	Ditto ditto ...
154	,,	Ditto ditto. 2nd year. No. 5.	Ditto ditto ...	Ditto ditto ...
155	,,	Ditto ditto. 2nd year. No. 6.	Ditto ditto ...	Ditto ditto ...
156	,,	Ditto. ditto. 2nd year. No. 7.	Ditto ditto ...	Ditto ditto ...
157	247	Ditto ditto. 2nd year. No. 9.	Ditto ditto ...	Ditto ditto ...
158	543	Ditto ditto. 2nd year. No. 10.	Ditto ditto ...	Ditto ditto ..
159	670	Ditto ditto. 2nd year. No. 11.	Ditto ditto ...	Ditto, ditto ...
160	438	Prayás. Attempt. A monthly paper. 3rd year. Nos. 10 and 11 (together).	.....	66, Ahiritolá Street; 4, Hem Chandra Kar's Lane; Calcutta.
161	639	Páka Pranáli. Art of Cooking. A monthly paper. Vol. VI. No I.	Edited by Vipra Dás Mukherji ...	2, Goábágán Street; 201, Cornwallis Street; Calcutta.
162	1	Púrnimá. The Full Moon. A monthly paper. 9th year. Nos. 10 and 11. (together).	Edited by Satindra Dev Ráy ...	The Sávitrí Press, Bánsberiyá, Hugli ...
163	2	Ditto ditto. 9th year. No. 12	Ditto ditto ...	Ditto ditto ...
164	3	Ditto ditto. 10th year. No. 1	Ditto ditto ..	Ditto ditto ...
165	328	Sakhí. Female Companion. A monthly paper. Vol. I. Nos. 10, 11 and 12 (together).	Edited by Vaikuntha Nath Dás ...	211; 208-2, Cornwallis Street, Calcutta
166	526	Samálochaní. Review. Vol. I. Nos. 1 and 2 (together).	.....	98, Harrison Road; 20, Cornwallis Street; Calcutta.
167	428	Sáhitya. Literature. A monthly paper. Vol. XII. No. 9.	Edited by Suresh Chandra Samájpati	25-1, Scott's Lane; 82, Sitarám Ghosh's Street; Calcutta.
168	496	Sáhitya Parishat Patriká. The Journal of the Academy of Literature. A quarterly paper. Vol. VIII. No. 3.	Edited by Rámendra Sundar Trivedí	25-1, Scott's Lane; 187-1, Cornwallis Street; Calcutta.
169	80	Sáhitya Sanhitá. A Compilation of Literature. A monthly paper. Vol. II. No. 9	Edited by Káli Prasanna Kávyavisárad.	The Secular Press, 163, Kálighát Road, Bhawanipur; 106-1, Grey Street; Calcutta.
170	584	Sávitrí. A Name A monthly paper. Vol. V. Nos. 10, 11 and 12 (togther).	Edited by Prán Gaur Gosvámí ...	4, William's Lane, Calcutta; the Savitrí Office, Gayá.
171	424	Sibpur Kalej Patriká. The Journal of the Sibpur College, Vol. I. No. 1.	Edited by Atul Chandra Bágchi ...	78, Amherst Street, Calcutta; The Sibpur Engineering College, Sibpur, Howrah.
172	281	Sunítí. Good Morals. Vol. I. No. 6 ...	Edited by Dvijendra Náth Sinha and Nalin Vihárí Mitra.	13, Hara Chandra Mallik's Lane; 12, Sikdárbágán Street; Calcutta.
173	390	Tattvamanjarí. Blossoms of Truth. A monthly paper 5th year. No. 11.	Edited by the Followers of Ráma Krishna Paramahansa.	5, Nila Mádhav Sen's Lane; 30, Syámpukur Street; Calcutta.
174	602	Ditto ditto. 5th year. No. 12 ..	Ditto ditto ...	Ditto ditto ...
175	246	Udvodhan. Awakening. A fortnightly paper. 3rd year. No. 21.	Edited by Svámí Trigunátíta ...	14, Ráma Chandra Maitra's Lane, Calcutta.
176	,,	Ditto ditto. 3rd year. No. 22 ...	Ditto ditto ...	Ditto ditto ..
177	389	Ditto ditto 4th year. No. 1 ...	Ditto ditto ...	Ditto ditto ...
178	,,	Ditto ditto 4th year. No. 2 ...	Ditto ditto ...	Ditto ditto ...
179	582	Ditto ditto. 4th year. No. 3 ...	Ditto ditto ...	Ditto ditto ...
180	,,	Ditto ditto. 4th year. No. 4 ...	Ditto ditto ...	Ditto ditto ...
181	665	Ditto ditto. 4th year No. 5 ...	Ditto ditto ...	Ditto ditto ..
182	,,	Ditto ditto. 4th year. No. 6 ..	Ditto ditto ...	Ditto ditto ...
183	1	Utsáha. Encouragement. A monthly paper. 5th year. No. 3.	Edited by Vraja Sundar Sányál ..	The Utsáha Press, Boalia ... ...
184	3	Ditto ditto. 5th year. No. 4 ..	Ditto ditto ...	Ditto ... ...

Second Quarter ending 30th June 1902—continued.

6	7	8	9	10	11	12	13
Name or firm of printer and of publisher.	Date of issue from the press or of the publication.	Size and number of sheets, leaves, or pages.	Number of edition and number of copies of which the edition consists.	Printed or litho'd.	Price at which the book is sold to the public.	Name and residence of the proprietor of copyright, or any part of it.	Copyright registered or not.
					Rs. A. P.		
The Calcutta Press Company; Atul Krishna Chakravarti	Apl. 1	D.cr. 16mo; 80	1st; 500	P.	0 4 0	The author, Garden Reach.	
Bhút Náth Pálit; the editor	Mar. 8	Rl. 8vo; 80	1st; 2,500	P.	3 0 0 (yearly).	The editor.	
Ditto ditto ..	Apl. 15	Rl. 8vo; 56	1st; 2,500	P.	3 0 0 (yearly).	Ditto.	
Srímanta Lál Ráy Chaudhurí; Chandí Charan Banerji.	Feb. 1	D.cr. 16mo; 30	1st; 300	P.	0 1 0	The editor, 50, Basak's Lane, Baráhanagar, 24-Parganas.	
Ditto ditto .	Mar. 30	D.cr. 16mo; 32	1st; 350	P.	0 1 0	Ditto ditto.	
Sányál & Co. ...	Feb. 3	Dy. 8vo; 32	1st; 1,100	P.	0 4 0	Máhárájá Súryya Kánta Acháryya, Mymensingh.	
Devendra Náth Datta; Aghor Náth Datta.	Jan. 25	Dy. 8vo; 40	1st; 1,100	P.	1 4 0 (yearly).	Aghor Nath Datta; 120-2, Másjidbári Street, Calcutta.	
Ráma Krishna Ghosh; Aghor Náth Datta.	Mar. 25	Dy. 8vo; 40	1st; 11,00	P.	1 4 0 (yearly).	Ditto ditto.	
Sarat Chandra Chakravarti; Mayejuddin Ahmad.	,, 15	Dy. 8vo; 64	1st; 400	P.	0 6 0	The publisher, Hyátor, Howrah.	
Sányál & Co.; the editor ..	Feb. 8 1901.	D. cr. 8vo; 40	1st; 2,500	P.	0 4 0	The editor, 208-2, Cornwallis Street, Calcutta.	
Ramaní Mohan De; Khagendra Chandra De.	Aug. 13 to Oct. 17	D.fc. 8vo; 16	1st; 250	P.	0 4 0	The editor, 9, Kedár Náth Datta's Lane, Calcutta.	
Ditto ditto	,,	D.fc. 8vo; 16	1st; 250	P.	0 4 0	Ditto ditto.	
Ditto ditto	,,	D.fc. 8vo; 16	1st 250	P.	0 4 0	Ditto ditto.	
Ditto ditto	,,	D. fc. 8vo; 16	1st; 250	P.	0 4 0	Ditto ditto.	
Ditto ditto ...	,,	D. fc. 8vo; 16	1st; 250	P.	0 4 0	Ditto ditto.	
	1902.						
Ramaní Mohan De; Vasanta, Kumár Basu.	Feb. 1	D. fc. 8vo; 16	1st; 250	P.	0 4 0	Ditto ditto.	
Ditto ditto	Mar. 15	D. fc. 8vo; 16	1st; 250	P.	0 4 0	Ditto ditto.	
Ditto ditto ..	Apl. 4	D. fc. 8vo; 16	1st; 250	P.	0 4 0	Ditto ditto.	
Rájendra Náth Sen; the Prayás Samiti.	Feb. 28	Dy. 8vo; 48	1st; 750	P.	0 3 0	Asutosh Ghosh, 4, Ham Chandra Kar's Lane, Calcutta.	
Kunja Vihárí Dás; Guru Dás Chatterji.	Mar. 31	Dy. 8vo; 24	1st; 1,000	P.	0 4 0	The Editor, Calcutta.	
Annadá Prasád De ..	,, 25	Dy. 8vo; 48	1st; 750	P.	0 4 0	Rání Achal Bálá Dási, Bánsberiyá, Hugli.	
Ditto ...	Apl. 28	Dy. 8vo; 36	1st; 750	P.	0 4 0	Ditto ditto.	
Ditto .	Jun. 12	Dy. 8vo; 40	1st; 500	P.	0 4 0	Ditto ditto.	
Kárttik Chandra Datta; the Editor	Feb. 10	Dy.cr. 8vo; 32	1st; 1,000	P.	0 3 0	The Editor, 208-2, Cornwallis Street, Calcutta.	
Kunja Vihárí De; Subodh Chandra Majumdár.	Mar. 8	D.cr. 16mo; 32	1st; 1,000	P.	0 3 0	The publisher, 20, Conwallis Street, Calcutta,	
Sányál & Co.; the Editor .	Mar. 13	Dy. 8vo; 64	1st; 1,650	P.	0 4 0	The editor, Calcutta.	
Sányál & Co.; the Vangíya Sáhitya Parishat Office.	,, 2	Rl. 8vo; 64	1st; 1,000	P.	0 12 0	The Vangíya Sáhitya Parishat Office, 137-1, Conwallis Street, Calcutta.	
Nírada Varan Dás; the Sáhitya Sabhá.	Apl. 27	Dy. 8vo; 64	1st; 750	P.	....	The Sáhitya Sabhá, 106-1, Grey Street, Calcutta.	
Amrita Lál Ghosh; the editor .	Mar. 18	Dy. 12mo; 144	1st; 250	P.	0 2 0	The editor, Gaya.	
Hari Charan Mánná; the Student's of the Civil Engineering College.	Feb. 7	Dy. 8vo; 24	1st; 250	P.	1 8 0 Yearly,	The Students, Civil Engineering College, Sibpur, Howrah.	
Náráyan Chandra Hájrá; Durgá Charan Nandi.	Jan. 31	Rl. 12mo; 12	1st; 250	P.	0 1 0	Tárak Dás Banerji, 31-1, Durgá Charan Mitra's Street, Calcutta.	
Asutosh Goshál; the editor ...	Feb. 28	Dy. 8vo; 24	1st; 500	P	0 2 0	The editor, 30, Syampukur Street, Calcutta.	
Ditto ditto .	Mar. 26	Dy. 8vo; 20	1st; 500	P.	0 2 0	Ditto ditto.	
The editor	Jan. 24	Dy. 8vo; 32	1st; 800	P.	0 2 0	The editor, 14, Ráma Chandra Maitra's Lane, Calcutta.	
Ditto	,, 24	Dy. 8vo; 32	1st; 800	P.	0 2 0	Ditto ditto.	
Ditto . ..	Mar. 1	Dy. 8vo; 32	1st; 800	P.	0 2 0	Ditto ditto.	
Ditto	,, 1	Dy. 8vo; 32	1st; 800	P.	0 2 0	Ditto ditto.	
Ditto	,, 15	Dy. 8vo; 32	1st; 600	P.	0 2 0	Ditto ditto.	
Ditto	,, 15	Dy. 8vo; 32	1st; 600	P.	0 2 0	Ditto ditto.	
Ditto	Apl. 7	Dy. 8vo; 32	1st; 600	P.	0 2 0	Ditto ditto.	
Ditto	,, 7	Dy. 8vo; 32	1st; 600	P.	0 2 0	Ditto ditto.	
Mahirúddin Sarkár . ..	Mar. 31	Dy. 8vo; 32	1st; 250	P.	0 3 0	Krishna Kánta Sáhá, Boalia.	
Ditto , ...	May 22	Dy. 8vo; 32	1st; 250	P.	0 6 0	Ditto ditto.	

1 Serial number.	2 Registration number.	3 Title, with an English translation of the same when not in that language, the language of the book, and the subject.	4 Name of author, translator, or editor of the book, or any part of it.	5 Place of printing and publication.
		BENGALI PERIODICALS—concld.		
		MISCELLANEOUS—*concld.*		
185	597	Vanga Darsan. The Mirror of Bengal. A monthly paper. Vol. I. No. 12.	Edited by Ravíndra Náth Tagore ...	48, Grey Street and 1, Charakdángá Street; 20, Cornwallis Street; Calcutta.
186	395	Vasudhá. The World. A monthly paper. 1st year. No. 5.	....	78, Amherst Street; 13, Krishna Sinha's Lane; Calcutta.
187	,,	Ditto ditto. 1st year. No. 8	....	Ditto ditto ...
188	,,	Ditto ditto. 1st year. No. 9	....	Ditto ditto ...
189	300	Vámábodhiní Patriká. A Journal for the Instruction of Women. A monthly paper. Nos. 444 and 445 (together).	Edited by Umes Chandra Datta ...	6 College Street Bye-lane; 9, Anthony Bágán Lane; Calcutta.
190	669	Ditto ditto. No. 446 ...	Ditto ditto ...	Ditto ditto ...
191	479	Vírabhumi. The Land of the Hero. A monthly paper. Vol. III. Nos. 4 and 5 (together).	Edited by Nílaratan Mukherji ...	80-5, Madan Mitra's Lane, Calcutta; Kirnáhár, Birbhum.
192	658	Ditto ditto. Vol. III. No. 6	Ditto ditto ..	Ditto ditto ...
193	489	Visva-Jananí. The Mother of the Universe. A monthly paper. 1st year. Nos. 11 and 12 (together).	.....	336, Upper Chitpur Road; 78-2, Báránasi Ghosh's Street; Calcutta.
194	524	Yuvaka. Young Man. A monthly paper. Vol. II. No. 5.	Edited by Yogánanda Prámánik ...	51-2, Sukea's Street, Calcutta; Sántipur
195	518	Ditto ditto. Vol. II. No. 6.	Ditto ditto ...	Ditto ditto ...
196	517	Ditto ditto. Vol. II. No. 7.	Ditto ditto ...	Ditto ditto ...
197	618	Ditto ditto. Vol. II. No. 8.	Ditto ditto ...	Ditto ditto ...
		RELIGION.		
198	208	Khrishtiya Bándhav. The Christian Friend. A monthly paper. For January, 1902. (C).	Edited by Rev. M. N. Náth ...	The Baptist Mission Press, 41, Lower Circular Road, Calcutta.
199	416	Ditto ditto For February 1902. (C.)	Edited by Rev. T. W. Norledge ...	Ditto ditto ...
200	571	Ditto ditto. For March 1902. (C.)	Ditto ditto ...	Ditto ditto ...
201	646	Ditto ditto. For April 1902. (C.)	Ditto ditto ...	Ditto ditto ...
202	222	Snehamayí. The Affectionate Lady. A monthly paper. For January 1902.	Edited by Rev. W. S. Page ...	Ditto ditto ...
203	417	Ditto ditto. For February 1902. (C.)	Ditro	Ditto ditto ...
204	576	Ditto ditto. For March 1902. (C.)	Ditto	Ditto ditto ...
205	536	Suprabhát. Good Morning. A monthly paper. Vol. I. No. 1. (C).	Edited by the Suprabhát Committee	The Methodist Publishing House, 7-1, Doctor's Lane, Calcutta.
206	442	Nava Vidhán. The New Dispensation. A monthly paper. Vol. VIII. No. 3. (B).	Edited by Chiranjiv Sarmá ...	2, Goábágán Street, Calcutta ...
207	,,	Ditto ditto. Vol. VIII. No. 4. (B.)	Ditto ditto ...	Ditto ditto ...
208	,,	Ditto ditto. Vol. VIII. No. 5. (B.)	Ditto ditto ...	Ditto ditto ...
209	,,	Ditto ditto. Vol. VIII. No. 6. (B.)	Ditto ditto ...	Ditto ditto ...
210	,,	Ditto ditto. Vol. VIII. No. 7. (B.)	Ditto ditto ...	Ditto ditto ...
211	,,	Ditto ditto. Vol. VIII. No. 8. (B.)	Ditto ditto ...	Ditto ditto ...
212	,,	Ditto ditto. Vol. VIII. No. 9. (B.)	Ditto ditto ...	Ditto ditto ...
213	,,	Ditto ditto. Vol. VIII. No. 10. (B.)	Ditto ditto ...	Ditto ditto ...
214	,,	Ditto ditto. Vol. VIII. No. 11. (B.)	Ditto ditto ...	Ditto ditto ...
215	,,	Ditto ditto. Vol. VIII. No. 12. (B.)	Ditto ditto ...	Ditto ditto ...
216	477	Ditto ditto. Vol. IX. No. 1. (B.)	Ditto ditto ...	Ditto ditto ...
217	624	Ditto ditto. Vol. IX. No. 2. (B.)	Ditto ditto .	Ditto ditto ...
218	285	Tattvabodhiní Patriká. The Journal devoted to the Exposition of Truth. A monthly paper. No. 702. (B.)	Edited by Dvijendra Náth Tagore	55, Upper Chitpur Road, Calcutta ...
219	566	Ditto ditto. No. 704. (B.) ...	Ditto ditto	Ditto ditto ...
		SCIENCE (NATURAL AND OTHER).		
220	169	Rámadhanu. The Rainbow. Part. IV ...	Edited by Súryya Náraya Ghosh ...	The Oriental Press, Dacca ... ...
221	341	Svásthya. Health. A monthly paper. Vol. V Nos. 8 and 9 (together).	Edited by Durgá Dás Gupta ...	25-1, Scott's Lane; 23, Madan Mitra's Lane; Calcutta.
222	494	Ditto ditto. Vol. V. No. 10	Ditto ditto	Ditto ditto ...
		II.—ENGLISH PERIODICALS.		
		MEDICINE.		
44	257	The Calcutta Journal of Medicine. A monthly paper. Vol. XXI. No. 1.	Edited by Dr. Mahendra Lál Sarkár	51, Sánkáritolá Lane, Calcutta ...
45	538	Ditto ditto. Vol. XXI. No. 2	Ditto ditto ...	Ditto ditto ...
46	647	Ditto ditto. Vol. XXI. No. 3	Ditto ditto ..	Ditto ditto ...
47	217	The Indian Lancet. A Weekly Journal Vol. XIX. No. 4.	Edited by Dr. Lawrence Fernandez	6, Royd Street, Calcutta ... ...
48	278	Ditto ditto. Vol. XIX. No. 5	Ditto ditto ...	Ditto ditto ...
49	304	Ditto ditto. Vol. XIX. No. 6	Ditto ditto ...	Ditto ditto ...
50	337	Ditto ditto. Vol. XIX. No. 7	Ditto ditto ...	Ditto ditto ...

Second Quarter ending 30th June 1902—continued.

6	7	8	9	10	11	12	13
Name or firm of printer and of publisher.	Date of issue from the press or of the publication	Size and number of sheets, leaves, or pages.	Number of edition and number of copies of which the edition consists.	Printed or litho'd.	Price at which the book is sold to the public.	Name and residence of the proprietor of copyright, or any part of it.	Copyright registered or not.
	1902.				Rs. A. P.		
Rákhál Chandra Ghosh and Nripendra Chandra Mukherji; Sailes Chandra Majumdár.	Mar. 15	Rl. 8vo; 52	1st; 1,000	P.	0 5 0	The publisher, 20, Cornwallis Street, Calcutta.	
Hari Charan Mánná; B. B. Dhar...	Feb. 7	Dy. 8vo; 20	1st; 175	P.	0 10 0	B. B. Dhar, 13, Krishna Sinha's Lane, Calcutta.	
Ditto ditto ...	„ 7	Dy. 8vo; 20	1st; 175	P.	0 10 0	Ditto ditto.	
Ditto ditto ...	„ 7	Dy. 8vo; 20	1st; 175	P.	0 10 0	Ditto ditto.	
Nanda Lál Chatterji; Asutosh Ghosh.	„ 10	Rl. 8vo; 66	1st; 1,100	P.	0 4 0	The editor, 9, Anthony Bágán Lane, Calcutta.	
Ditto ditto ...	Mar. 25	Rl. 8vo; 36	1st; 1,100	P.	0 4 0	Ditto ditto.	
Bhút Náth Pálit; Devi Dás Bhattáchárjya.	„ 18	Dy. 8vo; 64	1st; 1,000	P.	1 0 0 (yearly).	Suresa Chandra Sarkar, Kirnáhár, Birbhum.	
Ditto ditto ...	Apl. 14	Dy. 8vo; 32	1st; 1,000	P.	1 0 0 (yearly.)	Ditto ditto.	
Nílamani Dhar, Rámeswar Dás ...	Feb. 24	Dy. 8vo; 46	1st; 500	P.	0 2 0	.....	
Hari Charan De; the editor ...	„ 23	Dy. 8vo; 16	1st; 250	P.	0 1 0	.....	
Ditto ditto ...	Mar. 2	Dy. 8vo; 16	1st; 250	P.	0 1 0	.....	
Ditto ditto ...	„ 12	Dy. 8vo; 16	1st; 250	P.	0 1 0	.....	
Ditto ditto ...	„ 24	Dy. 8vo; 16	1st; 250	P.	0 1 0	.....	
Rev. C. H. Harvey	Jan. 6	Rl. 8vo; 24	1st; 450	P.	0 1 0	.....	
Ditto	„ 30	Rl. 8vo; 24	1st; 450	P.	0 1 0	.....	
Ditto	Feb. 28	Rl. 8vo; 24	1st; 450	P.	0 1 0	.....	
Ditto	Apl. 3	Rl. 8vo; 24	1st; 450	P.	0 1 0	.....	
Ditto	Jan. 6	Cr. 4vo; 8	1st; 975	P.	0 0 6	.....	
Ditto	Jan. 31	Cr. 4to 8	1st; 850	P.	0 0 6	.....	
Ditto	Feb. 28	Cr. 4to 8	1st; 850	P.	0 0 6	.....	
George Henderson	Mar. 10	Rl. 8vo; 17	1st; 500	P.	0 1 0	The Súprabhát Committee, 7-1, Doctor'r Lane, Calcutta.	
Kunja Vihárí Dás	Feb. 21	Dy. 8vo; 16	1st; 450	P.	.....	Trailokya Náth Sányál, Nárikeldángá. Calcutta.	
Ditto	„ 21	Dy. 8vo; 16	1st; 450	P.	.....	Ditto ditto.	
Ditto	„ 21	Dy. 8vo; 16	1st; 450	P.	.....	Ditto ditto.	
Ditto	„ 21	Dy. 8vo; 16	1st; 450	P.	.....	Ditto ditto.	
Ditto	„ 21	Dy. 8vo; 16	1st; 450	P.	.....	Ditto ditto.	
Ditto	„ 21	Dy. 8vo; 16	1st; 450	P.	.....	Ditto ditto.	
Ditto	„ 21	Dy. 8vo; 16	1st; 450	P.	.....	Ditto ditto.	
Ditto	„ 21	Dy. 8vo; 16	1st; 450	P.	.....	Ditto ditto.	
Ditto	„ 21	Dy. 8vo; 16	1st; 450	P.	.....	Ditto ditto.	
Ditto	„ 21	Dy. 8vo; 16	1st; 450	P.	.....	Ditto ditto.	
Ditto	Mar. 15	Dy. 8vo; 16	1st; 450	P.	.....	Ditto ditto.	
Ditto	„ 25	Dy. 8vo; 16	1st; 450	P.	.....	Ditto ditto.	
Devendra Nath Bhattáchárya ...	Jan. 14	D. Fc. 4to; 18	1st; 300	P.	0 6 0	The editor, 6, Dváraká Náth Tagore's Lane, Calcutta.	
Ditto ditto ...	Mar. 15 1886.	D. Fc. 4to; 18	1st; 300	P.	0 6 0	Ditto ditto.	
Ráma Chandra Vanikya ...	May 16 1902.	Dy. 12mo; 192	4th; 150	P.	1 4 0	.....	
Sányál & Co.; the Svásthya office	Jan. 25	Dy. 8vo; 64	1st; 500	P.	0 4 0	The author, 23, Madan Mitra's Lane, Calcutta.	
Ditto ditto	Feb. 23	Dy. 8vo; 32	1st; 500	P.	0 4 0	Ditto ditto.	
Panchánan Sarkár	Feb. 1	Dy. 8vo; 44	1st; 250	P.	1 0 0	The editor, 51, Sánkáritolá Lane, Calcutta.	
Ditto	Mar. 25	Dy. 8vo; 44	1st; 250	P.	1 0 0	Ditto ditto.	
Ditto	Apl. 8	Dy. 8vo; 44	1st; 250	P.	1 0 0	Ditto ditto.	
L. Fernandez	Jan. 27	Dy. 4to; 36	1st; 650	P.	0 8 0	The editor, 6 Royd Street, Calcutta.	
Ditto	Feb. 3	Dy. 4to; 36	1st; 650	P.	0 8 0	Ditto ditto.	
Ditto	„ 10	Dy. 4to; 36	1st; 650	P.	0 8 0	Ditto ditto.	
Ditto	„ 17	Dy. 4to; 36	1st; 650	P.	0 8 0	Ditto ditto.	

1 Serial number.	2 Registration number.	3 Title, with an English translation of the same when not in that language, the language of the book, and the subject.	4 Name of author, translator, or editor of the book, or any part of it.	5 Place of printing and publication.
		II.—ENGLISH PERIODICALS—contd.		
		MEDICINE—*Concld.*		
51	378	The Indian Lancet. A Weekly Journal. Vol. XIX. No. 8.	Edited by Dr. Lawrence Fernandez	6, Royd Street, Calcutta ... ...
52	391	Ditto ditto. Vol. XIX. No. 9	Ditto ditto ...	Ditto ditto ... ...
53	448	Ditto ditto. Vol. XIX. No. 10	Ditto ditto ..	Ditto ditto ... ...
54	490	Ditto ditto. Vol. XIX. No. 11	Ditto ditto ...	Ditto ditto ... ...
55	580	Ditto ditto. Vol. XIX. No. 12	Ditto ditto ...	Ditto ditto ... ...
56	606	Ditto ditto. Vol XIX. No. 13	Ditto ditto ..	Ditto ditto ... ...
57	686	Ditto ditto. Vol. XIX. No. 14	Ditto ditto ...	Ditto ditto ... ...
58	404	Nava Chikitsá Vijnán. The New Medical Science. A monthly paper. Vol. IV. No. 8	Edited by Rádhá Mádhav Háldár ...	43, Vrindávan Basák's Street; 79, Ahiritolá Street; Calcutta.
59	467	Ditto ditto. Vol. IV. No. 9	Ditto ditto	Ditto ditto ...
60	468	Ditto ditto. Vol. IV. No. 10	Ditto ditto	Ditto ditto .
		MISCELLANEOUS.		
61	568	Journal of the Asiatic Society of Bengal. Vol. LXX. Part II. No. 2—1901.	Edited by the Natural History Secretary.	41, Lower Circular Road; 57, Park Street; Calcutta.
62	567	Ditto ditto. Vol. LXXI. Part III, No. 1—1902.	Edited by the Anthropological Secretary.	Ditto ditto ...
63	419	Ditto ditto. Vol. LXX. Part III, No. 2. 1901.	Ditto ditto ...	Ditto ditto ...
64	3	Medical Missions in India. A quarterly journal. Vol. VIII. No. 29.	Edited by Rev. J. M. Macphail ...	The Santal Mission Press, Pokhuria, Manbhum.
65	447	Proceedings and Journal of the Agricultural and Horticultural Society of India. For October-December, 1901.	Edited by P. Lancaster . .	115, Amherst Street, 4, Belvedere Road, Alipore; Calcutta.
66	248	Stamps. A monthly paper. Vol. V. No. 4	Edited by B. Gordon-Jones ...	12, British Indian Street; 7, Mangoe Lane; Calcutta.
67	610	Ditto ditto. Vol. V. No. 5	Ditto ditto ..	Ditto ditto ..
68	578	St. Andrew's Colonial Homes Magazine. A monthly paper. For January, 1902.	Edited by Rev. J. A. Graham ...	41, Lower Circular Road, Calcutta; Kalimpong.
69	204	The Calcutta Review. A quarterly paper. For October, 1901.	Edited by A. Mackenzie-Cameron ...	12, Bentinck Street, Calcutta ...
70	697	Ditto ditto. For January, 1902	Ditto ditto ...	Ditto ditto ...
71	321	The Dawn. A monthly paper. Vol. V. No. 6.	Edited by Satís Chandra Mukherji...	3, Hasting's Street, Calcutta ...
72	320	Ditto ditto. Vol. V. No. 7.	Ditto ditto .	Ditto ditto . ...
73	638	Ditto ditto. Vol. V. No. 8.	Ditto ditto .	Ditto ditto . . ...
74	26	The Gardener's Magazine. A monthly paper. Vol. IV. No. 4.	Edited by Bhúvan Mohan Ray .	The New Town Press, Bhawanipur; 8, Gopálnagar Road, Alipore.
75	32	Ditto ditto. Vol. IV. No. 5.	Ditto ditto ..	Ditto ditto ... ...
76	1	Hours of Idleness. A monthly paper. Vol. I. No. 2.	Chandra Kánta Mitra . ..	Chauhátta, Bánkipore ... ...
77	14	Ditto ditto. Vol. 1. No. 3.	Ditto	Ditto ... ...
78	608	The Light of the East. A monthly paper. Vol. X. No. 2.	Edited by S. C. Mukherji . .	21, Balarám Ghosh's Street; 53. Syám Bázár Street; Calcutta.
79	,,	Ditto ditto. Vol. X. No. 3.	Ditto ditto .	Ditto ditto ... .
80	,,	Ditto ditto. Vol. X. No. 4.	Ditto ditto . .	Ditto ditto . . .
81	232	The National Magazine. A monthly paper. Vol. XV. No. 9.	Edited by Kálíprasanna De .	189, Bowbazar Street; 32, Kálí Das Sinha's Lane; Calcutta.
82	294	Ditto ditto. Vol. XV. No. 10.	Ditto ditto ...	10, Sambhu Chandra Chatterji's Street; 32, Kálí Dás Sinha's Lane; Calcutta.
83	631	Ditto ditto. Vol. XV. No. 11.	Ditto ditto .	Ditto ditto ... . .
84	698	Ditto ditto. Vol. XV. No. 12.	Ditto ditto ...	Ditto ditto ... ...
85	370	The Oriental. A monthly paper. Vol. IV. No. 4.	Edited by Manmatha Náth Datta .	40, Nayán Chánd Datta's Street, Calcutta
86	499	Ditto ditto. Vol. IV. No. 5.	Ditto ditto ...	Ditto ditto ...
		RELIGION.		
87	27	Conference. A quarterly paper. No. 1 ...	Edited by Dr. J. M. Macphail	Pokhuria, Manbhum ... ...
88	207	Monthly Record of News and Notes. A monthly paper. For January, 1902.	Edited by Rev. H. Ryland-Brown ...	The Baptist Mission Press, Calcutta; Darjeeling.
89	412	Ditto ditto. For February, 1902	Ditto ditto .	Ditto ditto ...
90	572	Ditto ditto. For March, 1902 .	Ditto ditto .	Ditto ditto ...
91	211	Our Bond. A monthly paper. Vol. VIII. No. 1.	Edited by Rev. J. Tackle	The Baptist Mission Press, Calcutta; Brahmanberiyá, Comilla.
92	411	Ditto ditto. Vol. VIII. No. 2	Ditto ditto	Ditto ditto ...
93	505	Ditto ditto. Vol. VIII. No. 3 .	Ditto ditto ...	Ditto ditto ...
94	573	Ditto ditto. Vol. VIII. No. 4 ..	Ditto ditto ...	Ditto ditto ...
95	221	The Indian Evangelical Review. A quarterly journal. Vol. XXVIII. No. 110.	Edited by Rev. A. Paton Begg .	20, British Indian Street, Calcutta ...
96	534	The Indian Church Review. A monthly paper For January, 1902.	Edited by Rev. Walter K. Firminger and Rev. A. Saunders Dyer.	5 & 6, Government Place, Calcutta ...
97	209	The India Sunday School Journal. A monthly paper. Vol. XII. No. 1.	Edited by Rev. R. Burges ...	41, Lower Circular Road, Calcutta ...
98	410	Ditto ditto. Vol. XII. No. 2 ...	Ditto	Ditto ditto ...

Second Quarter ending 30th June 1902—continued.

Name or firm of printer and of publisher.	7 Date of issue from the press or of the publication.	8 Size and number of sheets, leaves, or pages.	9 Number of edition and number of copies of which the edition consists.	10 Printed or litho'd.	11 Price at which the book is sold to the public.	12 Name and residence of the proprietor of copyright, or any part of it.	13 Copyright registered or not.
	1902.				Rs. A. P.		
L. Fernandez	Feb. 24	Dy. 4to; 36	1st; 650	P.	0 8 0	The editor 6, Royd Street, Calcutta.	
Ditto	Mar. 3	Dy. 4to; 36	1st; 650	P.	0 8 0	Ditto ditto.	
Ditto	„ 10	Dy. 4to; 36	1st; 650	P.	0 8 0	Ditto ditto.	
Ditto	„ 17	Dy. 4to; 36	1st; 650	P.	0 8 0	Ditto ditto.	
Ditto	„ 24	Dy. 4to; 36	1st; 650	P.	0 8 0	Ditto ditto.	
Ditto	„ 31	Dy. 4to; 36	1st; 650	P.	0 8 0	Ditto ditto.	
Ditto	Apl. 7 1901.	Dy. 4to; 36	1st; 650	P.	0 8 0	Ditto ditto.	
Goshtha Vihárí De; Priya Mádhav Háldár.	Oct. 31	Rl. 8vo; 8	1st; 250	P.	0 12 0	The publisher.	
Ditto ditto ...	Dec. 17 1902.	Rl. 8vo; 8	1st; 250	P.	0 12 0	Ditto.	
Ditto ditto ...	Jan. 19	Rl. 8vo; 8	1st; 250	P.	0 12 0	Ditto.	
Rev. C. H. Harvey; the Asiatic Society of Bengal.	Mar. 8	Rl. 8vo; 24	1st; 650	P.	.....	.....	
Ditto ditto ...	Feb. 28	Rl. 8vo; 28	1st; 650	P.	.....	.....	
Ditto ditto ...	Jan. 14	Rl. 8vo; 46	1st; 650	P.	.....	.....	
Rev. A. Campbell	Apl. 1	Dy. 8vo; 24	1st; 350	P.	1 2 0 (yearly.)	.....	
Náráyan Chandra Ghosh; the Agricultural and Horticultural Society of India.	Feb. 26	Dy. 8vo; 36	1st; 700	P.	...	The editor, 4, Belvedere, Road, Alipore, Calcutta.	
Atal Vihárí Dás; the Calcutta Philatelic Company.	Jan. 9	Rl. 8vo; 12	1st; 600	P.	0 12 0 (yearly.)	The editor, 7, Mangoe Lane, Calcutta.	
Ditto ditto ...	Mar. 6	Rl. 8vo; 12	1st; 600	P.	.....	Ditto ditto.	
Rev. C. H. Harvey; the Board of Management of the St. Andrew's Colonial Homes.	Feb. 28	Cr. 4to; 16	1st; 10,000	P.	.....	.....	
T. J. Nicol; the City Press ...	Jan. 2	Dy. 8vo; 221	1st; 200	P.	4 0 0	Thos. S. Smith, 12, Bentinck Street, Calcutta.	
Ditto ditto ...	Apl. 1	Dy. 8vo; 246	1st; 180	P.	4 0 0	Ditto ditto.	
Jay Gopál Dás	Jan. 10	Rl. 8vo; 32	1st 750	P.	0 8 0	The Bhágavat Chatuspáthi, 3 Padmapukur Road, Bhawanipur.	
Ditto	Feb. 2	Rl. 8vo; 32	1st 750	P.	0 8 0	Ditto ditto.	
Ditto	Mar. 13	Rl. 8vo 32	1st; 750	P.	0 8 0	Ditto ditto.	
Manmatha Nath Mitra; the editor	Apl. 8	Dy. 8vo; 12	1st; 500	P.	0 2 0	The editor, 8, Gopálnagar Road, Alipore.	
Ditto ditto ...	May 12	Dy. 8vo; 12	1st; 500	P.	0 2 0	Ditto ditto.	
Ganes Lál; C. K. Mitra ...	Mar. 21	Dy. 8vo; 48	1st; 500	P.	0 4 0	Ganesh Lál, Chauháttá, Bánkipore.	
Jang Báhádur Lál; C. K. Mitra ...	Apl. 10	Dy. 8vo; 40	1st; 500	P.	0 4 0	Punit Lál, Chauháttá, Bankipur.	
Gopál Chandra Láhirí; the editor	...	Rl. 8vo; 32	1st; 1,000	P.	0 8 0	The editor, 53, Syám Bázár Street, Calcutta.	
Ditto ditto ...	...	Rl. 8vo; 32	1st; 1,000	P.	0 8 0	Ditto ditto.	
Ditto ditto ...	...	Rl. 8vo; 32	1st; 1,000	P.	0 8 0	Ditto ditto.	
B. C. Sányál; the editor ...	Jan. 30	Rl. 8vo; 45	1st; 1,000	P.	1 0 0	The editor, 32, Kálí Dás Sinha's Lane, Calcutta.	
U. Rakshit; K. P. De	Feb. 17	Rl. 8vo; 43	1st; 1,000	P	1 0 0	Ditto ditto,	
Ditto	Apl. 4	Rl. 8vo; 45	1st; 1,000	P.	1 0 0	Ditto ditto.	
Ditto	„ 24	Rl. 8vo; 47	1st; 1,000	P.	1 0 0	Ditto ditto.	
Hari Charan Dás; the Society for the Resuscitation of Indian Literature.	Feb. 25	Rl. 8vo; 24	1st; 1,500	P.	2 0 0 (yearly).	The editor, 40, Nayán Chánd Datta's Street, Calcutta.	
Ditto ditto ...	Mar. 19	Rl. 8vo; 24	1st; 1,500	P.	...	Ditto ditto.	
Rev. A. Campbell	Feb. 28	Dy. 4to; 20	1st; 500	P.	0 12 0 (yearly).	.....	
Rev. C. H. Harvey; the editor ...	Jan. 2	Rl. 8vo; 4	1st; 200	P.	.....	.....	
Ditto ditto ...	„ 30	Rl. 8vo; 4	1st; 200	P.	...	.....	
Ditto ditto ...	Mar. 6	Rl. 8vo; 4	1st; 200	P.	...	.....	
Ditto ditto ...	Jan. 8	Dy. 8vo; 10	1st; 400	P.	...	.....	
Ditto ditto ...	„ 20	Dy. 8vo; 8	1st; 400	P.	...	.....	
Ditto ditto ...	Feb. 19	Dy. 8vo; 8	1st; 400	P.	...	.....	
Ditto ditto ...	Mar. 19	Dy. 8vo; 8	1st; 350	P.	...	.....	
Trail & Co.; the editor ...	Jan. 31	Dy. 8vo; 124	1st; 160	P.	5 0 0 (yearly).	The editor, Bhawanipur.	
Thacker, Spink and Co. ...	Feb. 28 1901.	Rl. 8 vo; 134	1st; 250	P.	2 0 0	The editor.	
Rev. C. H. Harvey; the India S. S. Union.	Dec. 21 1902.	Dy. 8 vo; 36	1st; 1,250	P.	0 3 0	.....	
Ditto ditto ...	Jan. 18	Dy. 8 vo; 36	1st; 1,250	P.	0 3 0	.....	

1 Serial number.	2 Registration number.	3 Title, with an English translation of the same when not in that language, the language of the book, and the subject.	4 Name of author, translator, or editor of the book, or any part of it.	5 Place of printing and publication.
		II.—ENGLISH PERIODICALS—concld.		
		RELIGION—*concld.*		
99	504	The India Sunday School Journal. A monthly paper. Vol. XII. No. 4.	Edited by Rev. R. Burges ...	41, Lower Circular Road, Calcutta ...
100	577	Ditto ditto. Vol. XII. No. 4 ...	Ditto ditto	Ditto ditto ...
101	205	The Students' Chronicle. A monthly paper. For January, 1902.	Edited by W. S. Page	The Baptist Mission Press, 41, Lower Circular Road, Calcutta; the Baptist Mission House, Dacca.
102	413	Ditto ditto. For February, 1902	Ditto ditto	Ditto ditto ...
103	574	Ditto ditto. For March, 1902 ...	Ditto ditto	Ditto ditto ...
104	554	The Young Men of India. A monthly paper For March, 1902.	Edited by C. J. White ...	46, Bechu Chatterji's Street; 86, College Street, Calcutta.
105	652	Ditto ditto. For April, 1902 ...	Edited by J. C. Mitra ...	Ditto ditto ...
		III.—GARO PERIODICALS.		
		RELIGION.		
3	210	Achikani Ripeng. A monthly paper. For December, 1901.	Edited by Rev. M. C. Mason ...	The Baptist Mission Press, 41, Lower Circular Road, Calcutta; Tura, Assam.
4	414	Ditto ditto. For January, 1902 ...	Ditto ditto ...	Ditto ditto ...
5	642	Ditto ditto. For February, 1902...	Ditto ditto ...	Ditto ditto ...
		IV.—HINDI PERIODICALS.		
		MISCELLANEOUS.		
3	362	Arogya Sudhánidhih. Depository of the Nectar of Health. A monthly paper Vol. 1. Nos. 4, 5 and 6 (together).	Edited by Srí Náráyan Sarmá ...	75, Cotton Street; 18, Rájá's Kátrá, Barabázár; Calcutta.
		RELIGION.		
4	645	Chhotá Nágpur Dúta Patriká. The Chota Nagpur Messenger. A monthly paper. For March, 1902 (C).	Edited by Pandit Bholá Náth ...	41, Lower Circular Road, Calcutta; Ranchi.
		V.—SANSKRIT PERIODICALS.		
		MISCELLANEOUS.		
2	463	Vidyodayah. The Dawn of Learning. A monthly paper. Vol. XXX. No. 12; Vol. XXXI. No. 1 (together).	Edited by Hrishikesa Sástrí ...	100-2, Mechhuyá Bázár Street, Calcutta; Bhátpárá, 24-Parganas.
		URDU PERIODICALS.		
		RELIGION.		
3	472	Zíá-ús-Lúnuá. Teachings of the HADIS. For February, 1902.	Abdul Jabbar	23, Dharamtalá Lane, Calcutta ...
4	473	Ditto ditto. For March, 1902 ...	Ditto	Ditto ditto ...
		BI-LINGUAL PERIODICALS.		
		I.—BENGALI AND ENGLISH PERIODICALS.		
		MEDICINE.		
3	456	The Indian Homœopathic Review. A monthly paper. For March and April, 1901 (together).	Edited by P. C. Majumdár ...	10, Sambhu Chandra Chatterji's Street; 203-1, Cornwallis Street; Calcutta.
4	,,	Ditto ditto. For October and November, 1901 (together).	Ditto ditto ...	Ditto ditto ...
		RELIGION.		
5	435	Tattvabodhiní Patriká. The Journal devoted to the Exposition of Truth. A monthly paper. No. 703. (B.)	Edited by Dvijendra Nath Tagore ...	55, Upper Chitpur Road, Calcutta ...
		II.—BENGALI AND SANSKRIT PERIODICALS.		
		MISCELLANEOUS.		
5	234	Jyotirvid. Astrologer. A monthly paper. 1st year. No. 8.	Edited by Vimalá Prasád Siddhánta Sarasvatí and K. Datta.	133, Musjidbárí Street; 181, Mániktalá Street; Calcutta.
6	671	Ditto ditto. 1st year. No. 9 ...	Ditto ditto ...	Ditto ditto ...
		RELIGION.		
7	2	Hindu Patriká. The Hindu Magazine. A monthly paper. 8th year. Nos. 11 and 12 (together) (H.)	Edited by Yadu Náth Majumdár ...	The Hindu Patriká Press, Jessore ...
8	293	Sa Sanginí Sajjanatoshani. The Sajjanatoshaní (The Delight of Good Men) with the Sangini (the Female Companion). A monthly paper. Vol. XIII. Nos. 6 to 9 (together) (H.)	Edited by Kedár Náth Datta Bhaktivinod.	133, Musjidbárí Street; 181, Mániktalá Street; Calcutta.
9	6	Srí Srí Gauḍ Bhúmi. The Land of Gauda. A monthly paper. Vol. I. Nos. 8 and 9 (together) (H).	Edited by Ráma Prasanna Ghosh ...	The Visva Vijay Press, Saidábád; Govarhátí, Gokarna; Mursidábád.
		III.—ENGLISH AND SANSKRIT PERIODICALS.		
		MISCELLANEOUS.		
4	1	The Brahmacharin. The Celebate. A monthly paper. Vol. III. Nos. 2 and 3 (together).	Edited by Yadu Náth Majumdár ...	The Hindu Patriká Press, Jessore ...
5	3	Ditto ditto. Nos. 4 and 5 Vol. III. (together).	Ditto ditto ...	Ditto ditto ...

Second Quarter ending 30th June 1902—concluded.

6	7	8	9	10	11	12	13
Name or firm of printer and of publisher.	Date of issue from the press or of the publication.	Size and number of sheets, leaves, or pages.	Number of edition and number of copies of which the edition consists.	Printed or litho'd.	Price at which the book is sold to the public.	Name and residence of the proprietor of copyright, or any part of it.	Copyright registered or not.
	1902.				Rs. A. P.		
Rev. C. H. Harvey; the India S. S. Union.	Feb. 18	Dy. 8vo; 36	1st; 1,250	P.	0 3 0	.....	
Ditto ditto ...	Mar. 15	Dy 8vo; 46	1st; 1,250	P.	0 3 0	.....	
Rev. C. H. Harvey; the editor ...	Jan. 4	D.fc. 4 to; 4	1st; 500	P.	0 0 6	.....	
Ditto ditto ...	Feb. 8	D. fc. 4 to; 4	1st; 700	P.	0 0 6	.....	
Ditto ditto ...	Mar. 1	D. fc. 4 to; 4	1st; 1,000	P.	0 0 6	.....	
R. Datta; the Indian National Council.	,, 25	Rl. 8vo; 24	1st; 1,600	P.	1 0 0 (yearly).	The Indian National Council, Calcutta.	
Ditto ditto ...	Apl. 15	Rl. 8vo; 24	1st; 1,600	P.	...	The Young Men's Christian Association, 86, College Street, Calcutta.	
Rev. C. H. Harvey; the Garo Mission, American Baptist Missionary Union.	Jan. 9	D.cr. 16mo; 16	1st; 700	P.	...	.....	
Ditto ditto ...	Jan. 31	D.cr. 16mo; 16	1st; 700	P.	...	.....	
Ditto ditto ...	Mar. 10	D.cr. 16mo; 16	1st; 700	P.	...	.....	
Rasik Lál Pán; the editor ...	Feb. 10	Dy. 8vo; 94	1st; 500	P.	0 2 0	The editor, 18, Rájá's Kátrá, Barabázár, Calcutta.	
Rev. C. H. Harvey; the S. P. G. Mission.	Mar. 12	Dy. 4to; 4	1st; 400	P.	0 0 6	.....	
Thákur Dás Chatterji; the editor	,, 6	Rl. 12mo; 36	1st; 250	P.	0 4 0	The publisher, Bhátpárá, 24-Parganas.	
Zíá-ur, Rahman; Gani Ahamad ...	Feb. 20	Dy. 8vo; 20	1st; 750	L.	2 8 0 (yearly.)	The editor.	
Ditto ditto ...	Mar. 16	Dy. 8vo; 24	1st; 500	L.	2 8 0 (yearly.)	Ditto.	
U. Rakshit; K. L. Bágchí ...	Feb. 28	Dy. 8vo; 48	1st; 150	P.	0 8 0	The editor, 203-1, Cornwallis Street, Calcutta.	
Ditto ditto ...	Jan. 25	Dy. 8vo; 64	1st; 150	P.	0 8 0	Ditto ditto.	
Devendra Nath Bhattácháryya ...	Feb. 13	D.fc. 4to; 26	1st; 300	P.	0 6 0	The editor, 6, Dváraká Náth Tagore's Lane, Calcutta.	
Yogendra Náth Chakravartí; Siddheswar Ghosh.	Jan. 30	Dy. 8vo; 24	1st; 1,000	P.	0 2 0	The publisher, 181, Mániktalá Street, Calcutta.	
Ditto ditto ...	Apl. 18	Dy. 8vo; 24	1st; 1,000	P.	0 2 0	Ditto ditto.	
Kálí Prasanna Chatterji ...	,, 19	Rl. 8vo; 68	1st; 2,500	P.	0 3 0	.....	
Yogendra Nath Chakravartí; Rádhiká Prasád Datta.	Jan. 30	Dy. 12mo; 128	1st; 500	P.	1 0 0 (yearly.)	The publisher, 181, Mániktalá Street, Calcutta.	
Viswambhar Dás; the editor ...	Apl. 11	Dy. 8vo; 64	1st; 500	P.	0 2 6	.....	
K. P. Chatterji	,, 19	Dy. 4to; 38	1st; 500	P.	0 6 0	The editor, Jessore.	
Ditto	June 25	Dy. 4to; 24	1st; 500	P.	0 6 0	Ditto.	

Additional List of Copyright of Books which, having been previously received, could not be embodied in the accompanying Catalogue.

1	2	3	4	5	6	7	8	9
Serial number.	Registration number.	The title of the book and the contents of the title-page with a translation into English of such title or contents when the same are not in the English language.	Name of author, editor, or translator of the book or any part of it.	Catalogue No.	Quarter.	Page of the Catalogue.	Date of registration of copyright.	The name and residence of the proprietor of the copyright, or of any portion of such copyright.
							1902	
40	1	Sáhitya Taranga. The Waves of Literature.	Madhu Súdan Ráo	4	1st, 1902	26-27	20th June	Madhu Súdan Ráo, Cuttack.
41	3	Anka Pustak. Pratham Bhág. Arithmetic. Part I.	Madhu Súdan Ráo and Madhu Súdan Dás.	46	„ „	28-29	20th „	Ditto, ditto.
42	4	Sáhitya Manjarí. Blossoms of Literature.	Srímatí Abantí Deví and Madhu Súdan Ráo.	3	„ „	26-77	20th „	Ditto, ditto.
43	5	Varnabodha. Knowledge of the Alphabet.	Madhu Súdan Ráo	5	„ „	26-27	20th „	Ditto, ditto.

N.B.—Numbers 34 to 39 are incorporated in the body of the Catalogue for the Quarter ending 30th June 1902.

The Catalogue of Books received in the Bengal Library during the Second Quarter ending 30th June 1902 contains the following :—

No.	Language.	Books		Total.
		Non-educational.	Educational.	
	Uni-linguals.			
1	Assamese	2	4	6
2	Bengali	134	107	241
3	English	55	48	103
4	Hindi	23	13	36
5	Manipuri	.....	1	1
6	Musalmani-Bengali	12	.....	12
7	Persian	1	1	2
8	Sanskrit	15	4	19
9	Tibetan	1	.....	1
10	Urdu	10	2	12
11	Uriya	31	6	37
	Total Uni-linguals ...	284	186	470
	Bi-linguals.			
1	Arabic and Musalmani-Bengali	2	.....	2
2	Arabic and Urdu	6	.....	6
3	Assamese and English	.....	1	1
4	Bengali and English	2	22	24
5	Bengali and Sanskrit	21	3	24
6	English and Hindi	.....	1	1
7	English and Sanskrit	2	2	4
8	Hindi and Sanskrit	2	.....	2
9	Persian and Urdu	.....	1	1
10	Sanskrit and Uriya	4	.....	4
	Total Bi-linguals ...	39	30	69
	Tri-linguals.			
1	Bengali, English and Sanskrit	1	8	9
2	English, Hindi and Urdu	.....	1	1
3	English, Persian and Urdu	.....	1	1
	Total Tri-linguals ...	1	10	11
	Quadri-Linguals.			
1	Bengali, English, Hindi and Urdu	.....	2	2
	Total Quadri-linguals ...	.....	2	2
	Poly-linguals.			
1	Assamese, Bengali, Cáchárí, Hindi, Káchá Nágá, Khásí, Kuki, Lushai, Manipurí, Mikir, Santali, Urdu and Uriya.	1	.....	1
	Total Poly-linguals ...	1	.....	1
	Uni-lingual Periodicals.			
1	Bengali Periodicals	127	.....	127
2	English Periodicals	62	.....	62
3	Garo Periodicals	3	.....	3
4	Hindi Periodicals	2	.....	2
5	Sanskrit Periodicals	1	.....	1
6	Urdu Periodicals	2	.....	2
	Total Uni-lingual Periodicals ...	197	.....	197
	Bi-lingual Periodicals.			
1	Bengali and English Periodicals	3	.....	3
2	Bengali and Sanskrit Periodicals	5	.....	5
3	English and Sanskrit Periodicals	2	.....	2
	Total Bi-lingual Periodicals ...	10	.....	10
	Grand Total of Books, &c., &c. ...	532	228	760

RÁJENDRA CHANDRA SÁSTRI,
Librarian of the Bengal Library and Keeper of the Catalogue of Books under section XVIII of Act XXV of 1867.

Calcutta,
The 7th August 1902.

REGISTERED No., C209.] No. 39 of 1902.

SUPPLEMENT TO

The Calcutta Gazette.

WEDNESDAY, SEPTEMBER 24, 1902.

OFFICIAL PAPERS.

[Non-Subscribers to the GAZETTE *may receive the* SUPPLEMENT *separately on payment of five rupees per annum if delivered in Calcutta, or seven rupees and eight annas if sent by post.]*

CONTENTS.

	Page
EXTRACT from the Annual Report on the Government Cinchona Plantation and Factory in Bengal for the year 1901 1902	1359
Weather and Crop Report for the week ending the 22nd September 1902	1363
Prices-current (retail and wholesale) of food grains and salt in the head-quarters station bazars of the districts of Bengal on the 15th September 1902	1367
CIRCULAR and Eastern Canal for the week ending Saturday the 20th September 1902	1374
Results of the Meteorological Observations taken at the Alipore Observatory from 14th to 20th September 1902 ...	1375
Eastern Bengal State Railway during the month of June 1902	1376
Weekly Return of Traffic Receipts on Indian Railways .	1378

ANNUAL REPORT ON THE GOVERNMENT CINCHONA PLANTATION AND FACTORY IN BENGAL FOR THE YEAR 1901-1902

The 12th September 1902.—The following extracts from the Annual Report on the Government Cinchona Plantation and Factory in Bengal for the year 1901-1902 are published for general information.

E. W. COLLIN,
Offg. Secy. to the Govt. of Bengal.

No. 149C., dated Royal Botanic Garden, Sibpur, the 14th July 1902.

From—MAJOR D. PRAIN, M.B., I.M.S., Superintendent, Royal Botanic Garden, Calcutta, and of Cinchona Cultivation in Bengal, and Government Quinologist,

To—The Secretary to the Government of Bengal, Financial Department.

I HAVE the honour to submit the report of the Cinchona Plantation and Factory for the official year 1901-1902.

Fortieth Annual Report of the Government Cinchona Plantation in Sikkim, being that for the financial year 1901-1902, and also the Report of the Factory for the same year, by MAJOR D. PRAIN, I.M.S., *Superintendent of Cinchona Cultivation in Bengal, and Government Quinologist.*

1. *Weather and General.*—The rainfall during the year was below normal; 92·69 inches, as against an average of 123·01 for the preceding 27 years. As compared with 1900-1901 the number of rainy days was greater, 153 as against

137; the total fall was, however, considerably less, 92·69 inches for 1901-1902, as against 126·23 inches for 1900-1901. No heavy downpours occurred and no damage has to be recorded. At Munsong, the new extension in the Dumsong Forest, 88·42 inches of rain were registered.

2. *Plantation and Crop.*—The number of plants put out during the year was 485,530. These included 397,010 *Ledgeriana*, 26,078 *Succirubra*, 55,007 *Hybrid No. I*, and 7,435 *Hybrid No. II*. This latter, which appears for the first time in this report, has been raised by crossing *Ledgeriana* with *Succirubra*; the *Hybrid* of former reports, to be designated in future *Hybrid No. I*, is a cross between *Succirubra* and *Officinalis*. It is hoped that the new hybrid may possess enough of the richness of *Ledgeriana* with enough of the vigour of *Succirubra*, to admit of its extensive cultivation on the Rungbee part of the plantation where the conditions are most unfavourable for *Ledgeriana* itself.

The area planted at the head-quarters plantation (Mungpoo and Sittong) was 88·28 acres; here 121,828 *Ledgeriana* plants, all the *Succirubra* and *Hybrid No. I* plants and 3,085 *Hybrid No. II* plants were put out. At Munsong 103·58 acres were planted with 275,182 *Ledgeriana* and 4,350 *Hybrid No. II* plants.

The nursery stock of seedlings on 31st March 1902 was 21,500. As compared with 31st March 1901 there were in the lines 2,000 plants more of *Hybrid No. I* and 3,000 more of *Hybrid No. II*, but 11,500 fewer *Succirubra* and 32,000 fewer *Ledgeriana*. There were thus 38,500 fewer plants to be put out after 1st April 1902 than there were at the same date the preceding year, indicating an earlier planting season in 1902 than in 1901.

The total number of living trees of all kinds in the permanent plantations on 31st March 1902 was 2,763,286. Of these, 1,928,422 were at Mungpoo (including Rungbee and Labdah) and 246,648 at Sittong. At Munsong, in the Dumsong forest, there were 588,216. The trees included 2,000,092 *Ledgeriana*, 234,446 *Succirubra*, 2,130 *Officinalis*, 519,183 *Hybrid No. I* and 7,435 *Hybrid No. II*. The increase as compared with 31st March 1901 was 379,758.

Planting at Munsong this year has been less successful than could be wished. A failing water-supply at the nursery-lines compelled the Deputy Superintendent to plant early as the least of two evils; the result has been a very high proportion of casualties. Arrangements have already been made to meet the case and to replant where replanting is necessary.

During the year 600 maunds of bonemeal, at the rate of 10 maunds per acre, were applied to four-year-old cinchonas. This manure acts slowly, and as yet little difference is apparent in the condition of the trees so treated.

The crop taken from the plantation during the year has been 203,405 lbs. of dry bark. From Mungpoo the quantity taken was 165,808 lbs.; from Sittong 37,597 lbs. The crop has been composed of 120,294 lbs. *Ledgeriana*, 3,396 lbs. *Succirubra* and 79,715 *Hybrid No. I*. From the Mungpoo Division the bark has been taken from outlying and sparse patches of *Ledgeriana* and *Hybrid No. I*, which have been uprooted in accordance with the policy pursued during recent years of concentrating the area under cinchona so as to admit of its higher cultivation. The Sittong division has never given satisfactory results with *Ledgeriana*, and the last trees of that kind have now been harvested from the division. The whole of the bark thus harvested has been made over as usual to the Quinologist.

3. *Factory and outturn.*—Work in the factory has gone on throughout the year without accident or delay. Very considerable improvement has been effected in the arrangement and method of working. The improvements have necessitated various renewals and a number of additions to the factory plant.

The raw material worked up during the year included 390,043½ lbs. *Ledgeriana*, *Hybrid No. I* and *Officinalis* bark which provided 10,010 lbs. 12 oz. of suphate of quinine, the average yield being 2·56 per cent. The residual (amorphous) alkaloids that are left over in the process, accounted for during the year, amount to 5,367 lbs. In addition to this quantity, 99,600 lbs of *Succirubra* and *Hybrid* barks to which 4,980 lbs. of residual alkaloids were added, yielded 3,424 lbs. of cinchona febrifuge. The total outturn of manufactured products for the year has thus been 13,434 lbs. 12 oz., an increase as compared with the previous year of 3,599 lbs. 12 oz. This increased

quantity included 2,663 lbs. 12 oz. of sulphate of quinine and 936 lbs. of cinchona febrifuge.

4. *General charges.*—The charges debitable against the department as a whole have amounted to Rs. 25,632-7-11, as against Rs. 28,769-10-6 for the preceding year. These charges include pay of clerical and menial establishment, Rs. 4,935; postal and telegraph charges, Rs. 521-12; advertising manufactured articles, Rs. 1,052; and taxes (road and public works cesses), Rs 1,475. They include, besides, the expenditure incurred in opening up new and extending existing plantations (as apart from the upkeep of permanent plantations and the harvesting of bark) and expenditure in additions to the factory (as apart from cost of working and of manufacturing quinine and febrifuge). The charges for extensions amounted to Rs. 9,895-7-8, being Rs. 6,629-1-11 for planting 103·58 acres of new plantation at Munsong and Rs. 3,266-5-9 for planting 88·28 acres at head-quarters. The corresponding general outlay in connection with the factory amounted to Rs. 7,753-4-3.

5. *Plantation charges.*—The charges directly debitable against the plantation for upkeep and for the harvesting of bark have been Rs. 55,602-8-10, as against Rs. 50,428-10-6 for 1900-1901. Against this outlay has to be placed the harvest, 203,405 lbs. of dry bark collected during the year which was thus collected at a cost of Rs. 0-4-4·5 per lb., at which rate it passes over to the Quinologist's Department.

6. *Factory charges.*—The expenditure incurred in connection with the Factory was Rs. 79,404-2. Of this sum, Rs. 38,000 represents the purchase-money, and Rs. 1,012-10-7 the cost of carriage to the factory, of 120,290 lbs. of bark acquired from private growers; the actual working expenses of the factory for the year were therefore Rs. 40,391-7-5, being Rs. 35,131-5-5 incurred in the manufacture of sulphate of quinine and Rs. 5,260-2 for the manufacture of cinchona febrifuge.

In order to produce 10,010 lbs. 12 oz. of sulphate of quinine, 259,371 lbs. of *Ledgeriana* bark, 72,551 lbs. *Hybrid No. I*, and 26,728 lbs. *Officinalis* from the stock held on 1st April 1901 were used. The value of this bark was Rs. 29,887-8. In addition 31,393½ lbs. of *Officinalis* bark, purchased during the year for Rs. 11,276-11-9, were employed. The total value of the bark used was thus Rs. 41,164-3-9; this sum, added to the manufacturing charges, gives a total of Rs. 76,295-9-2, or Rs. 7-9-11·3 per lb. Of the residual (amorphous) alkaloid left as a bye-product in the manufacture of quinine, 4,980 lbs. treated along with 99,600 lbs. of *Succirubra* and *Hybrid No. I* bark, provided 3,424 lbs. of cinchona febrifuge. The value of the bark used was Rs. 8,300; of the residual alkaloids, Rs. 4,720-10; the working expenses amounted to Rs. 5,260-2. The total cost of making 3,424 lbs. of cinchona febrifuge was thus Rs. 18,280-12, or Rs. 5-5-5 per lb.

7. *Issues of manufactured articles.*—The issues of sulphate of quinine for the year amounted to 9,793 lbs. 3 oz., a decrease of 1,213 lbs. 13 oz. as compared with 1900-1901. This decrease is accounted for by the fact that the Jail Department required 1,500 lbs. less for conversion into pice-packets. The demand by Government officers for dispensaries, &c., on the other hand, increased by 391 lbs. 9 oz.

The issues of cinchona febrifuge for the year amounted to 3,670 lbs. 4 oz., a decrease as compared with the previous year of 135 lbs. 12 oz. This decrease is explained by the fluctuating character of the demands on the part of medical depôts. The Mian Mir Depôt took 100 lbs. more than in 1900-1901, but that at Calcutta required 650 lbs. less. This deficit was to some extent counterbalanced by an indent for 300 lbs. cinchona febrifuge by the Principal Veterinary Officer, South Africa. Judged by the only certain test,—the demand by the public generally,—the belief in the reliability of febrifuge as a remedy for malaria remains unchanged. These sales to the public were 113 lbs. 8 oz. in excess of those for 1900-1901.

8. *Receipts.*—The receipts for the year have amounted to Rs. 1,91,922-5-2 as compared with Rs. 2,27,087-10-3 for the preceding year. Cash receipts have amounted to Rs. 78,441-2-6, and include, besides the receipts for manufactured articles (quinine Rs. 48,521-5-6 and cinchona febrifuge Rs. 28,393-8), Rs. 1,296-3 as receipts for crude products (bark Rs. 168-3, seed Rs. 40, residual

alkaloids Rs. 1,088), and Rs. 230-2 as receipts for miscellaneous articles (empty soda-drums, gunny-bags, &c.) The book-credits for the year amounted to Rs. 1,13,481-2-8 and have included Rs. 27,550 for issues to the Bengal Jail Department, and Rs. 1,609-8 for issues to the Punjab in connection with the pice-packet systems in these provinces. The other book-credits were Rs. 81,316-10-8 for issues to medical depôts; Rs. 3,000 for issues to the Principal Veterinary Surgeon, South Africa, and Rs. 5 to the Inspector-General of Civil Hospitals, Bengal. The outstandings, representing cash-issues made within the last few days of the financial year, the transactions regarding which were not completed on 31st March, amounted to Rs 4,401-10.

9. *Stock account.*—The manufactured articles in stock on 31st March 1902 consisted of 2,957 lbs. 15 oz. of sulphate of quinine and 2,534 lbs. 12 oz. of cinchona febrifuge; their respective values were, quinine Rs. 22,323-13-11 and febrifuge Rs. 13,533, these sums representing the cost of production of each of the articles. Raw material and unmanufactured products included 115 lbs. of residual (amorphous) alkaloids in stock at Calcutta, valued at Rs. 109-0-2 and 1,397,241 lbs. 8 oz. of cinchona bark, valued at Rs. 1,55,904-0-7. The value of stores in stock was Rs. 4,886-5-3, consisting of oils Rs. 2,850-8-3, chemicals Rs. 1,673, and sundries (plaster of Paris, charcoal for purification and spare wheel for turbine) Rs. 362-13.

* * * * *

10. * * * * * * * *Balance sheet.*—The balance on the working of the Department was Rs. 59,806-1-8, but against this has to be placed the expenditure incurred in writing down the difference between the cost of production and the actual market-value of the bark harvested from the plantation. This amounts to Rs. 18,500-1-10, so that the actual surplus for the year is Rs. 41,305-15-10. This surplus, it has to be remarked, must not be looked upon as wholly profit. The quantities of the various articles in stock were not materially different at the opening and at the close of the year; the enhancement in value noted above is thus due to the fact that a somewhat different method of estimating the value of cinchona bark in store has been prescribed for observance. If this factor in the surplus be disregarded, the difference between income and expenditure, Rs. 31,283-2-5, with the depreciation charge in the bark-harvest, Rs. 18,500-1-10, deducted therefrom, thus leaving an actual surplus of Rs. 12,783-0-7, more approximately represents the profit of the Department for the year.

11. *Sale of quinine at post-offices.*—The quantity issued to the Jail Department during 1901-1902 was 1,900 lbs., a falling off as compared with the preceding year of 1,500 lbs. No explanation of this remarkably diminished demand has been received from the Departments concerned.

* * * * *

WEATHER AND CROP REPORT.

For the week ending the 22nd September 1902.

Burdwan.—Rainfall at Sadar 2·02, Kalna 0·79, Katwa 1·60, Raniganj 2·32. Weather fine and hot. Transplantation of *aman* finished. Weeding of *aman* and harvesting of *aus* continues. More rain wanted. Fodder and water sufficient. No cattle-disease. Common rice sells at 11 seers per rupee.

Birbhum.—Rainfall at Sadar ·13, Rampur Hât 1·05. Weather unsettled. Standing paddy flourishes and doing well. Fodder sufficient. Common rice sells at 12½ seers per rupee.

Bankura.—Rainfall at Sadar ·15. Paddy and sugarcane doing well, but more rain wanted. Fodder and water sufficient. Common rice sells at 13 seers per rupee.

Midnapore.—Rainfall at Sadar 0·43, Contai nil, Tamluk 1·54, Ghatal 0·59. Weather hot and cloudy. Harvesting of *aus* going on. Agricultural prospects favourable. Fodder and water sufficient. Cattle-disease reported from Binpur thana. Common rice sells as follows:—

	Srs.	ch.	
Sadar	12	8	per rupee.
Contai	13	0	
Tamluk	11	0	
Ghatal	12	0	

Hooghly.—Rainfall at Sadar nil, Serampore 0·36, Arambagh 1·90. Weeding of *aman* and steeping of jute going on. Prospect of standing crops good. Weather seasonable. Fodder and water sufficient. Common rice sells as follows:—

	Srs.	ch.	
Sadar	10	0	per rupee.
Serampore	10	5	
Arambagh	11	5	

Howrah.—Rainfall at Sadar 0·02, Ulubaria 0·45. Fall general and recorded two days in the week. More rain wanted for the high lands. Harvesting of the *aus* finished. Its threshing is going on. Cutting and steeping of jute still going on. Sugarcane doing well. Transplantation of the *aman* nearly finished. Fodder and water-supply sufficient. No cattle-disease. Common rice sells on an average at 11 seers per rupee everywhere within the district.

24-Parganas.—Rainfall at Sadar 1·02, Barasat 0·48, Basirhat 1·12, Diamond Harbour 0·10. Little rain. Weather hot and sunny. Rain urgently wanted in Diamond Harbour. State and prospect of standing crops good. *Aus* and jute still being harvested. Transplantation of *aman* finished. Land being prepared for the *rabi* crops in Basirhât. Condition of cattle good. Supply of fodder and water sufficient. Common rice sells as follows:—

	Srs.	ch.	
Sadar	11	0	per rupee
Basirhat	10	0	
Diamond Harbour	10	8	

Nadia.—Rainfall at Sadar ·08, Kushtia 2·20, Chuadanga 1·43, Meherpur ·86, Ranaghat ·88. Weather hot. Harvesting of jute almost finished. Prospects of standing crops good. No cattle-disease reported. Fodder and water sufficient. Common rice sells as follows:—

	Srs.	ch.	
Sadar	12	0	per rupee.
Kushtia	11	0	
Chuadanga	10	0	
Meherpur	13	5	
Ranaghat	12	0	

Murshidabad.—Rainfall at Sadar 2·69, Kandi 2·80, Jangipur 2·00, Lalbagh 1·22. Weather seasonable. Sowing of *rabi* crop commences. Harvesting of *aus* and transplantation of *aman* over. Jute being cut and steeped in Jangipur. Prospect of sugarcane good. No cattle-disease. Fodder and water sufficient. Common rice sells as follows:—

	Srs.	ch.	
Sadar	11	8	per rupee.
Kandi	12	8	
Jangipur	12	0	
Lalbagh	11	0	

Jessore.—Rainfall at Sadar 0·05, Jhenida 2·16, Magura 1·34, Narail 0·08, Bangaon 1·02. Weather seasonable. Prospects of crops good. Harvesting of *aus* completed. More rain wanted. Fodder and water sufficient. Cattle-disease reported from Salikha outpost

in Magura subdivision and from Bagharpara thana in Sadar. Common rice sells as follows:—

	Srs.	ch.	
Sadar	12	0	per rupee
Jhenida	12	0	
Magura	11	0	
Narail	11	8	
Bangaon	13	0	

Khulna.—Rainfall at Sadar 2·67, Bagerhat 0·68, Satkhira 0·18. Weather seasonable. Transplantation of *aman* nearly completed. Fodder and water sufficient. A few cases of cattle-disease reported from thana Khulna. Common rice sells as follows:—

	Srs.	ch.	
Sadar	11	8	per rupee.
Bagerhat	11	11	
Satkhira	10	8	

Rajshahi.—Rainfall at Sadar 6·06, Nator 2·19, Naugaon 1·82. Weather hot and rains ceasing. Prospects of standing crop very good. Harvesting of jute and transplantation of *aman* nearly finished. No cattle-disease reported. Common rice selling at 12 seers per rupee.

Dinajpur.—Rainfall at Sadar 9·43. Fall in the district general, varying from 1·61 to 8·57. Weather gloomy. Standing crops good. Steeping of jute continues. Cattle-disease reported from two thanas. Fodder and water plentiful. Rice selling at 13 seers at Thakurgaon and 12 seers at Sadar per rupee.

Jalpaiguri.—Rainfall at Sadar 14·27, Alipore Duars 16·11. Fall general and weather rainy. *Haimanti* paddy doing well. Prospect favourable. Harvesting of *bhadoi* paddy nearly finished. Steeping of jute going on. Lands are being cultivated for tobacco. Common rice sells at 11¼ seers a rupee. Fodder and water sufficient.

Darjeeling.—Rainfall at Sadar 8·23, Kurseong 13·65, Siliguri 7·81. Weather seasonable. *Hills*—*Haimanti dhan*, *bara* and *chhota marua* and maize being harvested. *Terai*—Transplanting of *haimanti* paddy pratically finished. Reaping of jute and *bhadoi* going. Prospects good. Coarse rice sells as follows:—

	Srs.	ch.	
Hills	8	0	per rupee.
Terai	9	0	

Maize sells at Darjeeling at 20 seers and at Kalimpong at 34 seers per rupee.

Rangpur.—Rainfall at Sadar 8·59, Gaibanda 2·29, Kurigram 7·83, Nilphamari 6·55. Weather cloudy and rainy. Cutting and steeping of jute and transplantation of *aman* going on. Water and fodder sufficient. Common rice sells as follows:—

	Srs.	ch.	
Sadar	9	8	per rupee.
Gaibanda	10	0	
Kurigram	11	0	
Nilphamari	10	8	

Bogra.—Rainfall at Sadar 1·25. Fall general. Transplantation of *aman* finished and estimated at cent. per cent. of usual area, coming up well. Harvesting of jute going on. Fodder and water sufficient. Common rice sells at 12 seers per rupee.

Pabna.—Rainfall at Sadar 1·99, Sirajganj 3·93. Weather cloudy and rainy. Showers general. Prospects of *aman* and sugarcane fair. Fodder sufficient. No cattle-disease. Common rice sells at 10 seers per rupee.

Dacca.—Rainfall at Sadar ·86, Manikganj 2·75, Munshiganj ·68, Narayanganj ·2. Prospects of crops fair. Weather seasonable. Fodder available. No cattle-disease. Common rice sells at 11 seers per rupee.

Mymensingh.—Rainfall at Sadar 2·43, Jamalpur 2·54, Kishorganj 2·93, Netrakona 7·25, Tangail 0·07. Weather seasonable. Jute steeping going on. Transplantation of *aman* nearly over. Fodder scarce in parts. Water sufficient. No cattle-disease. Common rice selling as follows:—

	Srs.	ch.	
Sadar	12	0	per rupee.
Kishorganj	11	4	
Jamalpur	11	7	
Netrokona	12	0	
Tangail	10	8	

Faridpur.—Rainfall at Sadar 0·65, Goalundo 3·54, Madaripur 0·10. Weather sultry. State and prospects of crops good. Fodder available. No cattle-disease. Common rice sells at 11 seers the rupee.

Backergunge.—Rainfall at Sadar 2·82. Fall general. Weather seasonable. Transplantation of *aman* continues. Prospects fair. Cattle-disease reported from thana Matbari. Fodder sufficient. Common rice sells at 13 seers (*aus*) and 12 seers (*aman*) per rupee.

Tippera.—Rainfall at Sadar 3·08, Brahmanbaria 1·19, Chandpur ·04. Weather seasonable Prospects fair. *Aman* paddy thriving but damaged by flood in places. Harvesting of jute and transplantation of *aman* almost completed. Fodder and water sufficient. No cattle-disease. Common rice sells at 14 seers per rupee.

Noakhali.—Rainfall at Sadar 1·98, Feni 1·44. Weather seasonable. Harvesting of *aus* nearly finished. Transplantation of *aman* continues. Prospects fair. Condition of betelnut good. No cattle-disease. Fodder and water sufficient. Common rice sells at Sadar at 12 seers, and at Feni at 13 seers per rupee.

Chittagong.—Rainfall at Sadar 1·75, Cox's Bazar 4·24. Transplantation of *aman dhan* is still going on. Cattle-disease continuing. Fodder and water sufficient. Rice selling at 12 seers 11 chitaks per rupee.

Chittagong Hill Tracts.—Rainfal at Sadar 1·71. Fall general. Weather warm with occasional rain. *Joom* harvesting continues. Paddy crop good. Cotton and *til* bad. Common rice selling at 16 seers per rupee. No cattle-disease.

Patna.—Rainfall at Sadar 0·85, Bihar 1·58, Dinapore 1·25, Hilsa 1·70, Bikram 2·63 Weather hot and cloudy. Harvesting of Indian-corn continues. Transplantation of paddy nearly completed. More rain still wanted. No cattle-disease. Fodder and water sufficient. Common rice sells as follows :—

	Srs.	ch.	
Patna	12	0	per rupee.
Barh	12	0	
Bihar	10	0	
Dinapore	12	4	

Gaya Rainfall at Sadar 2·64, Jahanabad 0·66, Aurangabad 1·09, Nawadah 1·04. Weather hot and cloudy. *Bhadoi* crops being harvested. Prospects of standing crops fairly good, if *hathia* rain falls general. No cattle-disease. Fodder and water for cattle ample. Average price of common rice is 11 seers 6 chitaks per rupee.

Shahabad.—Rainfall at Sadar 1·31, Buxar 1·71, Bhabhua 2·32, Sasaram 1·16, Dehri 1·50. Weather hot and cloudy. Harvesting of *bhadoi* continues. Standing crops doing well. Fodder and water sufficient. No cattle-disease reported. Rice sells at Sadar at 11 seers a rupee.

Saran.—Rainfall at Sadar 1·85, Siwan 3·29, Gopalganj 3·85. Weather cloudy and very hot. Standing crops doing well. *Bhadoi* crops being harvested in places. Transplantation of paddy nearly finished. More rain wanted. Fodder and water sufficient. No cattle-disease Common rice sells at 13 seers per rupee.

Champaran.—Rainfall at Sadar 8·62, Bettiah 2·88. Weather hot and cloudy. Harvesting and threshing of *bhadoi* crops still going on. Prospects good. Cattle-disease reported. Fodder and water sufficient. Common rice sells at 15¼ seers and maize at 24½ seers per rupee.

Muzaffarpur.—Rainfall at Sadar ·46, Hajipur ·17, Sitamarhi 2·55. Weather hot and cloudy occasionally. Transplantation of paddy finished. Harvesting of *bhadoi* crops continues. Prospects fair. Fodder and water sufficient. Prices are—Common rice sells at 11½, and maize at 22 seers a rupee.

Darbhanga.—Rainfall at Sadar 3·53, Samastipur 2·61, Madhubani 2·15. Prospect of standing crops fair. Fodder and water sufficient. Cattle-disease is reported from Dalsingsarai police-station. Common rice sells as follows :—

	Srs.	ch.	
Sadar	12	9	per rupee.
Samastipur	12	8	
Madhubani	11	6	

Monghyr.—Rainfall at Sadar 0·13, Begusarai ·91, Jamui 2·03. Weather hot and cloudy. *Bhadoi* harvesting commenced. Sowing of chillies and sweet potatoes going on. Sugarcane and standing crops doing well. Paddy benefited by recent rains. No cattle-disease. Fodder and water ample. Common rice sells as follows :—

	Srs.	ch.	
Sadar	11	7	per rupee.
Begusarai	11	8	
Jamui	11	0	

Bhagalpur.—Rainfall at Sadar 4·22, Banka 3·66, Madhipura 7·50, Supaul 8·72. Weather cloudy. Harvesting of *marua* completed and that of *bhadoi* nearly completed. Transplantation of *aghani* paddy going on. Prospects good. Water and fodder sufficient. Cattle-disease reported from a few places. Common rice sells as follows :—

	Srs.	ch.	
Sadar	11	6	per rupee.
Banka	12	8	
Madhipura	13	8	
Supaul	15	0	

Purnea.—Rainfall at Sadar 2·54, Araria 3·31, Kishanganj 1·74. Fall general and good. Weather seasonable. Jute being harvested. Prospects of *aghani* paddy good. A few cases of cattle-disease reported from Palasi outpost. Fodder and water sufficient. Common rice sells as follows:—

	Srs.	Ch.		
Sadar	10	0	(*aghani*)	per rupee.
Kishanganj	11	0	(*aghani*)	per rupee.
Araria	14	0	(*bhadoi*)	per rupee.

Malda.—Rainfall at Sadar 2·48, Chanchal 3·25, Gajol 3·54, Sibganj ·87. Fall general. Weather hot and cloudy. Prospects of winter rice good. Harvesting of *bhadoi* completed. Cutting of jute not yet finished. No cattle-disease. Fodder and water sufficient. Common rice sells at 11½ seers per rupee.

Sonthal Parganas.—Rainfall at Sadar 1·01, Deoghur 1·25, Godda 3·67, Jamtara 1·58, Pakaur 3·26, Rajmahal 3·15. Weather hot with occasional showers. Standing crops doing well. *Aus dhan* being harvested. Fodder and water sufficient. Common rice sells at Sadar at 12 seers per rupee.

Cuttack.—Rainfall at Sadar 1·32. Fall general. Weather seasonable. Early *beali* being cut. Late *beali* and *sarad* progressing well. Prospects fair. No cattle-disease. Fodder and water sufficient. Common rice sells at 13¾ seers (old) and 15¾ seers (new) per rupee at Sadar.

Balasore.—Rainfall at Sadar nil. *Beali* being reaped. *Sarad* being weeded. Prospects good. Standing crops with sugarcane thriving. Rice sells at 13 seers a rupee at Sadar. Fodder and drinking water sufficient. No report from Bhadrak.

Angul.—Rainfall at Sadar 0·24, Tikerpara 0·92, Bissipara 2·41. Weather hot and cloudy. Weeding of paddy, sowing of *rabi* and harvesting of early miscellaneous crops continue. Common rice sells at 12 seers per rupee at Sadar and Khondmals.

Puri.—Rainfall 0·63. Weather hot. Weeding of winter rice in progress. Harvesting of *bhadoi* paddy and *mundua* continues. Sugarcane and other miscellaneous crops doing well. Fodder and water-supply sufficient. Common rice sells at 15 seers per rupee. Cattle-disease prevailing at places.

Hazaribagh.—Rainfall at Sadar 2·40, Giridih 0·93. Fall not general. Weather seasonable. Harvesting of *bhadoi* going on. Cattle-disease reported from three thanas. Fodder and water sufficient. Common rice sells at 13 seers per rupee.

Ranchi.—Rainfall at Sadar 0·28. Weather hot and cloudy. Prospects of crops good. Sowing of *sirguja* continues. Cattle-disease reported from Ranchi, Karra and Sisai thanas. Fodder and water sufficient. Common rice selling at 14 seers per rupee.

Palamau.—Rainfall at Sadar 2·01. Weather seasonable. *Bhadoi* harvesting going on. Sugarcane and rice crops doing well. *Rabi* fields being prepared. Cattle-disease continues in places. Fodder and water sufficient. Prices at Sadar are—Rice 11½ seers, maize 14 seers per rupee.

Manbhum.—Rainfall at Sadar 0·56, Gobindpur 0·64. Weather seasonable. Prospects of crops good. More rain, however, wanted. Fodder and water sufficient. Cattle-disease not reported. Average price of common rice at Sadar is 12 seers, and at Gobindpur 10 seers 6 chitaks per rupee.

Singhbhum.—Rainfall 0·32. Prospect of crop favourable. Harvesting of *gora* paddy in progress. Average price of rice is 12 seers 6 chitaks per rupee in the district; at Chaibassa 12 seers per rupee.

General Summary.—Rain fell during the week in every district except Balasore, and the fall was heavy in parts of North Bengal. The districts of Burdwan, Bankura, Howrah, 24-Parganas, Jessore, Patna, Saran and Manbhum require more rain. Harvesting of *bhadoi* crops still going on. Sugarcane doing well. Transplantation of winter rice is almost finished and sowing of *rabi* has commenced at places. Prospects fair. Cattle-disease reported from 13 districts. Fodder and water generally sufficient. The price of common rice has risen in 7 districts, fallen in 10, and is stationary in the rest (30).

By order of the Lieutenant-Governor of Bengal,

W. C. MACPHERSON,

Offg. Secretary to the Govt. of Bengal.

REVENUE DEPARTMENT,

The 23rd September 1902.

PRICES-CURRENT (*RETAIL*) OF FOOD-GRAINS AND SALT

IN THE

HEAD-QUARTERS STATION BAZARS OF THE DISTRICTS OF BENGAL

DURING THE FORTNIGHT ENDING THE 15TH SEPTEMBER 1902.

PRICES-CURRENT (retail) of Food-grains and Salt in the Head-

Number.	DISTRICTS.	QUANTITIES PER RUPEE IN.											
		WHEAT.			BARLEY.			RICE, COMMON.			JOWAR OR CHOLUM (*Sorghum Vulgare*).		
		Present return.	Next preceding return.	Corresponding return of last year.	Present return.	Next preceding return.	Corresponding return of last year.	Present return.	Next preceding return.	Corresponding return of last year.	Present return.	Next preceding return.	Corresponding return of last year.
	BENGAL.	S. Ch.	S. Ch.	S. Ch.	S. Ch.	S. Ch.	S. Ch.	S. Ch.	S. Ch.	S. Ch.	S. Ch.	S. Ch.	S. Ch.
BURDWAN DIVISION.													
1	Burdwan ...	12 12	12 4	11 8	...	...	...	10 14	10 8	11 4	...	...	...
2	Birbhum ...	13 5	12 12	12 0	...	...	...	12 0	11 4	11 4	...	...	...
3	Bankura ...	12 0	12 8	11 4	...	...	...	12 0	11 10	11 14	...	...	...
4	Midnapore ...	10 0	10 0	10 0	...	...	...	12 8	12 0	10 10	...	...	...
5	Hooghly ...	10 8	10 0	10 0	...	...	...	9 4	9 4	9 4	...	...	...
6	Howrah ...	...	...	...	...	...	...	11 0	11 0	10 0	...	...	...
PRESIDENCY DIVISION.													
7	24-Parganas ...	...	...	...	...	...	...	10 0	10 0	9 8	...	...	...
8	Calcutta ...	10 10	10 10	10 10	16 0	16 0	16 0	10 0	10 0	8 14	16 0	16 0	16 13
9	Nadia ...	16 0	13 4	13 14	17 8	20 0	...	11 8	11 0	11 4	...	...	...
10	Murshidabad ...	15 8	15 8	13 0	20 0	20 0	20 0	12 8	12 8	10 8	...	...	...
11	Jessore ...	11 0	10 0	10 0	10 0	10 10	12 0	12 4	12 4	12 0	...	...	...
12	Khulna ...	...	...	...	...	...	...	10 12	12 12	10 0	...	...	...
RAJSHAHI DIVISION.													
13	Rajshahi ...	16 8	16 8	12 0	24 0	22 8	18 12	12 0 *Bhadoi* 15 0	12 0	9 12 *Bhadoi* 12 12	...	...	...
14	Dinajpur ...	...	14 6	12 0	...	...	13 5	10 12	13 3	9 9	...	...	...
15	Jalpaiguri ...	11 8	11 0	10 8	...	...	...	11 8	11 0	10 8	...	...	...
16	Darjeeling ...	...	...	...	...	...	...	10 0	9 8	9 0	...	...	...
17	Rangpur ...	10 8	10 8	9 8	...	...	...	9 8	10 8	8 0	...	...	...
18	Bogra ...	10 8	10 8	11 4	...	...	...	12 0	11 4	9 8	...	...	...
19	Pabna ...	15 12	15 12	16 8	26 0	26 0	22 8	11 4	12 8	9 15	...	...	...
DACCA DIVISION.													
20	Dacca ...	12 0	12 0	11 0	20 0	20 0	14 0	12 0	13 0	8 2	...	...	...
21	Mymensingh ...	12 0	12 8	10 0	13 0	13 0	10 0	12 0	11 0	8 0	...	...	...
22	Faridpur ...	16 8	16 0	13 5	22 0	20 0	15 0	11 8	11 4	9 0	...	...	...
23	Backergunge ...	...	...	...	...	...	...	12 0 *Aus.* 13 8	11 4 *Aus.* 13 8	8 8 *Aus.* 11 12	...	...	...

A. In the subdivisions the retail prices of salt per rupee are—Kalna 11 seers 3 chitaks; Katwa 11 seers 12 chitaks; Raniganj 10½ seers.
B. At Rampur Hat the retail price of salt is 11¼ seers per rupee.
C. At Vishnupur the retail price of salt is 9½ seers per rupee.
D. In the subdivisions the retail prices of salt per rupee are—Contai 10 seers; Tamluk 11 seers; Ghatal 11 seers 7 chitaks.
E. In the subdivisions the retail prices of salt per rupee are—Serampore 10½ seers; Arambagh 10 seers 10 chitaks.
F. At Ulubaria the retail price of salt is 10 seers 10½ chitaks per rupee.
G. In the marts in the interior of the district the retail prices of salt per rupee are—Uneria 10 seers 10 chitaks; Bansberia 11 seers; Induria 11 seers 8 chitaks; Moraghat 10 seers 10½ chitaks.
H. In the subdivisions the retail prices of salt per rupee are—Kushtia 10½ seers; Chuadanga 10 seers 8 chitaks (pucca); Meherpur 10 seers (kutcha); Ramghat 11 seers 4 chitaks (crushed).
I. In the subdivisions the retail prices of salt per rupee are—Lalbagh 11 seers; Kasba 11 seers; Jangipur 11 seers.
J. In the subdivisions the retail prices of salt per rupee are—Jhenida 10½ seers, Magura 9½ seers; Narail 10 seers; Bangaon 10 seers 10 chitaks.

quarters Station Bazars of the Districts of Bengal on the 15th September 1902.

INDIAN-CORN OR MAIZE (*Zea mays.*)			ARHAR OR TUR, CAJAN PEA. (*Cajanus indicus.*)			SALT.			WHOLESALE PRICES PER MAUND OF 40 SEERS. SALT.			DISTRICTS.	Number.	
Present return.	Next preceding return.	Corresponding return of last year.	Present return.	Next preceding return.	Corresponding return of last year.	Present return.	Next preceding return.	Corresponding return of last year.	Present return.	Next preceding return.	Corresponding return of last year.			
S. Ch.	S. Ch.	S. Ch.	S. Ch.	S. Ch.	S. Ch.	S. Ch.	S. Ch.	S. Ch.	Rs. A. P.	Rs. A. P.	Rs. A. P.	BENGAL.		
...	...	.	12 0	12 0	10 12	A 11 4	11 4	11 0	3 4 0	3 4 0	3 10 0	Burdwan.	1	Burdwan Division.
...	...	..	16 0	16 0	8 0	B 10 8	10 8	10 8	3 12 0	3 12 0	3 10 6	Birbhum.	2	
...	..	.	12 0	12 8	13 2	C 11 0	11 8	10 10	Panga. 3 10 0	3 7 0	3 12 0	Bankura	3	
...	...	...	...	...	8 0	D 10 8	10 8	10 0	Panga. 3 8 0	3 8 0	3 11 0	Midnapore.	4	
...	...	...	8 0	8 0	8 0	E 10 8	10 8	10 0	3 12 0	3 12 0	3 12 0	Hooghly.	5	
...	...	...	11 8	11 8	10 8	F 10 8	10 8	10 8	Panga. 3 12 0	3 12 0	3 10 0	Howrah.	6	
...	...	...	11 12	11 8	11 0	G 10 10	10 10	10 11	Panga. 3 4 0	3 5 0	3 10 0	24-Parganas.	7	Presidency Division.
17 0	17 0	14 6	9 6	9 0	10 0	11 0	11 0	11 0	Panga. 3 6 0	3 6 0	3 8 0	Calcutta.	8	
...	...	...	11 6	10 0	9 2	H 12 8	12 4	11 4	3 3 0	3 4 0	3 9 0	Nadia.	9	
...	...	...	12 0	12 0	9 0	I 11 0	11 0	11 0	3 6 6	3 6 6	3 7 0	Murshidabad.	10	
...	...	...	18 0	17 0	10 0	J 10 0	10 0	9 6	Panga. 3 12 0	3 12 0	3 14 0	Jessore.	11	
...	...	...	10 12	10 0	8 0	K 10 0	10 0	10 0	3 12 0	3 12 0	3 12 0	Khulna.	12	
...	...	...	12 12	12 12	13 8	L 10 5	10 5	9 12	Panga. 3 13 4	3 13 4	4 0 0	Rajshahi.	13	Rajshahi Division.
...	...	...	10 12	11 6	8 4	M 10 8	10 8	10 0	Panga. 3 11 0	3 12 0	4 0 0	Dinajpur.	14	
...	...	...	...	...	10 0	N 10 0	10 0	10 0	Panga. 3 9 6	3 9 6	3 13 0	Jalpaiguri.	15	
22 0	20 0	24 10	6 8	7 0	6 8	O 8 8	8 8	8 8	Rora. 4 10 0	4 10 0	4 11 0	Darjeeling.	16	
						8 8	8 0	8 8	Panga. 4 11 0	4 12 0	4 10 0			
13 0	13 0	11 8	10 0	10 0	6 12	P 10 8	10 8	9 0	Panga. 3 12 0	3 12 0	4 0 0	Rangpur.	17	
...	...	...	13 8	13 8	12 0	10 8	10 8	10 2	Panga. 3 10 8	3 10 8	3 13 4	Bogra.	18	
...	...		9 0	9 0	7 8	Q 10 8	10 8	9 12	Panga. 3 12 0	3 12 0	3 13 0	Pabna	19	
...	...	...	10 0	10 0	9 0	R 10 8	11 0	10 0	Panga. 3 12 0	3 10 0	3 14 0	Dacca.	20	Dacca Division.
...	..	..	9 0	8 8	7 8	S 10 8	10 0	9 0	Panga. 3 12 0	3 12 0	4 6 0	Mymensingh.	21	
.	...	...	13 0	13 0	10 0	T 10 10	10 10	10 0	Panga. 3 12 0	3 12 0	4 0 0	Faridpur	22	
...	...	...	..	...	...	U 10 0	10 0	10 0	Panga. 3 10 0	3 10 0	3 10 0	Backergunge.	23	

K. In the subdivisions the retail prices of salt per rupee are—Hagerhat 10 seers; Satkhira 11 seers.
L. In the subdivisions the retail prices of salt per rupee are—Nator 10 seers 8 chitaks; Naugaon 9½ seers.
M. No report from subdivision.
N. At Alipur Duars the retail price of salt is 8 seers per rupee.
O. The retail price of salt (panga) at Kurseong is 8 seers per rupee; Siliguri 9 seers.
P. In the subdivisions the retail prices of salt per rupee are—Gaibanda 10 seers, Kurigram 8 seers; Nilphamari 10½ seers.
Q. At Sirajganj the retail price of salt is 11 seers 10 chitaks per rupee.
R. In the marts in the interior of the district the retail prices of salt per rupee are—Madanganj 11 seers 13 chitaks; Manikganj 9 seers; Mirkadim 11 seers 6 chitaks.
S. In the subdivisions the retail prices of salt per rupee are—Kishorganj 10 seers 11 chitaks; Jamalpur 10 seers 5 chitaks; Tangail 9 seers; Netrokona 10 seers 12 chitaks.
T. In the subdivisions the retail prices of salt per rupee are—Goalundo 10 seers; Madaripur 10½ seers (crushed).
U. In the subdivisions the retail prices of salt per rupee are—Pirojpur 10 seers; Patuakhali 9 seers; Bhola 10 seers.

PRICES-CURRENT (retail) of Food-grains and Salt in the Head-quarters

Number.	DISTRICTS.	QUANTITIES PER RUPEE IN — WHEAT. Present return.	WHEAT. Next preceding return.	WHEAT. Corresponding return of last year.	BARLEY. Present return.	BARLEY. Next preceding return.	BARLEY. Corresponding return of last year.	RICE, COMMON. Present return.	RICE, COMMON. Next preceding return.	RICE, COMMON. Corresponding return of last year.	JOWAR OR CHOLUM (*Sorghum Vulgare*). Present return.	JOWAR OR CHOLUM (*Sorghum Vulgare*). Next preceding return.	JOWAR OR CHOLUM (*Sorghum Vulgare*). Corresponding return of last year.
BENGAL—*concluded.*		S. Ch.	S. Ch.	S. Ch.	S. Ch.	S. Ch.	S. Ch.	S. Ch.	S. Ch.	S. Ch.	S. Ch.	S. Ch.	S. Ch.
Chittagong Division. 24	Tippera ..	...	...	...	...	...	...	14 0	13 0	*Aman* 7 4 *Aus* 10 0	..	...	...
25	Noakhali ...	...	...	.	...	...	..	11 8	11 0	10 0	...	...	...
26	Chittagong ...	...	...	...	...	...	...	12 11	12 11	10 8	..	...	...
BIHAR.													
Patna Division. 27	Patna	14 0	14 0	14 0	19 12	19 0	19 0	12 0	11 0	12 0	*White* 16 0 *Raksa* 28 0	*White* 16 0 *Raksa* 20 0	17 0
28	Gaya ...	13 4	13 0	13 0	18 0	17 0	17 0	10 12	11 0	10 12	...	15 0	16 0
29	Shahabad	13 0	13 0	12 0	20 0	20 0	16 0	11 3	11 8	10 4	...	...	...
30	Saran ...	15 0	15 0	13 0	20 0	20 0	17 0	12 8	12 0	10 8	...	..	...
31	Champaran ...	13 8	13 0	12 0	23 0	22 0 to 24 0	24 8	15 8	14 0	10 8	...	..	...
32	Muzaffarpur ..	14 0	14 0	12 0	19 0	19 0	22 0	11 8	11 8	11 0	...	...	...
33	Darbhanga .	13 8	14 4	13 3	19 12	19 12	...	12 9	12 0	13 3	...	...	...
Bhagalpur Division. 34	Monghyr ...	15 8	14 8	14 11	23 0	25 0	16 12	10 8	10 8	12 0	...	...	...
35	Bhagalpur ...	13 14	13 14	13 4	19 0	19 0	20 8	11 10 *Aghani*	12 6 *Aghani*	11 4	...	...	...
36	Purnea ...	14 0	14 0	14 0	...	...	...	11 0 *Bhadoi* 15 0	10 8 *Bhadoi* 15 0 *New*	9 0 *Bhadoi* 11 0	...	...	...
37	Malda ...	16 0	16 0	...	...	...	...	12 8	12 0	10 0	...	...	...
38	Santhal Parganas.	11 8	11 8	10 0	15 0	15 0	15 0	12 0	12 0	14 8	...	...	...
ORISSA.													
Orissa Division. 39	Cuttack ...	11 2	11 13	11 2	...	...	...	14 7	13 2	11 13	...	...	...
40	Balasore ...	14 0	14 0	...	...	...	...	14 0	13 8 & 14 0	10 8 to 11 0	...	...	...
41	Angul ...	...	...	...	...	...	...	12 0	12 0	...	...	...	...
42	Puri	10 8	10 10	10 8	...	...	...	15 0	14 7	11 13	...	...	...
CHOTA NAGPUR.													
Chota Nagpur Division. 43	Hazaribagh ...	10 12	10 12	11 0	13 8	13 8	16 0	10 12	10 12	11 0	...	...	...
44	Ranchi ...	8 0 to 10 8	8 0 to 10 8	8 0 to 11 0	11 0	14 0	14 0 to 15 0	14 0	14 0	13 8	...	...	...
45	Palamau ...	11 4	10 15	9 0	14 1	14 1	13 8	12 6	10 6	9 0	...	...	...
46	Manbhum ...	12 0	12 0	12 0	16 0	16 0	16 0	13 8	13 4	11 8	20 0	20 0	...
47	Singhbhum ..	11 0	11 0	10 0	...	...	...	13 0	12 0	13 0	...	...	...

V. In the subdivisions the retail prices of salt per rupee are—Chandpur 9 seers ; Brahmanbaria 10 seers.
W. At Feni hât the retail price of salt is 10 seers per rupee.
X. Return from Cox's Bazar not received.
Y. In the subdivisions the retail prices of salt per rupee are—Barh 11½ seers ; Dinapore 10½ seers ; Bihar 10 seers.
Z. In the subdivisions the retail prices of salt per rupee are—Jahanabad 10 seers ; Nawada 10 seers ; Aurangabad return not received.
a. In the subdivisions the retail prices of salt per rupee are—Buxar 10 seers ; Bhabua 10½ seers ; Sasaram 11 seers.
b. In the subdivisions the retail prices of salt per rupee are—Siwan 11 seers 6 chitaks ; Gopalganj (Mirganj) 12 seers 2 chitaks.
c. At Bettiah the retail price of salt is 10½ seers per rupee.
d. In the subdivisions the retail prices of salt per rupee are—Hajipur 10½ seers ; Sitamarhi 11 seers.
e. In the subdivisions the retail prices of salt per rupee are—Samastipur 10 seers ; Madhubani 10 seers 6 chitaks.
f. In the subdivisions the retail prices of salt per rupee are—Begusarai 10½ seers ; Jamui 10 seers 8 chitaks.

CALCUTTA,
The 22nd September 1902.

Station Bazars of the Districts of Bengal on the 15th September 1902—concld.

Indian-corn or Maize. (*Zea mays.*)			Arhar or Thur, Cadjan Pea. (*Cajanus Indicus.*)			Salt.			Wholesale prices per maund of 40 seers. Salt.			Districts.	Number.	
Present return.	Next preceding return.	Corresponding return of last year.	Present return.	Next preceding return.	Corresponding return of last year.	Present return.	Next preceding return.	Corresponding return of last year.	Present return.	Next preceding return.	Corresponding return of last year.			
S. Ch.	S. Ch.	S. Ch.	S. Ch.	S. Ch.	S. Ch.	S. Ch.	S. Ch.	S. Ch.	Rs. A. P.	Rs. A. P.	Rs. A. P.	BENGAL—*concluded*		
...	...	...	...	...	...	10 0 [V]	10 0	9 0	3 14 0	3 14 0	4 8 0	Tippera.	24	Chittagong Division.
...	...	...	...	...	...	9 0 [W]	9 0	9 0	Panga. 4 2 0	4 2 0	4 8 0	Noakhali.	25	
...	...	...	8 0	8 0	8 10	10 0 [X]	10 0	9 8	Panga. 3 6 0	3 6 0	3 14 0	Chittagong.	26	
												BIHAR.		
23 0	21 0	19 0	22 0	17 0	15 8	10 12 [Y]	10 4	10 8	Panga. 3 11 0	3 11 0	3 12 0	Patna.	27	Patna Division.
21 0	18 0	18 4	15 12	15 12	13 8	11 0 [Z]	11 0	10 8	3 9 0	3 9 6	3 13 0	Gaya.	28	
20 0	18 0	...	12 0	12 0	11 0	10 0 [a]	10 0	10 8	4 0 0	4 0 0	3 13 0	Shahabad.	29	
20 0	20 0	18 0	21 0	15 8	12 0	11 0 [b]	11 0	10 4	Panga. 3 10 0	3 10 2	3 14 6	Saran.	30	
22 0	22 0	21 0	22 0	22 0	19 8	10 8 [c]	10 8	10 0	3 13 0	3 13 0	4 0 0	Champaran.	31	
22 0	20 0	20 0	13 0	13 8	18 0	10 0 [d]	10 0	9 12	Panga. 4 0 0	4 0 0	4 0 0	Muzaffarpur	32	
24 4	22 0	24 3	13 3	14 4	12 0	11 0 [e]	11 0	10 0	3 10 0	3 10 0	3 8 0	Darbhanga.	33	
28 0	29 0	19 15	11 0	11 0	17 13	10 0 [f]	10 8	10 8	4 0 0	3 14 6	3 6 6	Monghyr	34	Bhagalpur Division.
21 8	21 8	20 0	12 10	12 10	10 8	10 12 [g]	10 12	10 0	Panga. 13 10 0	3 10 0	3 12 0	Bhagalpur.	35	
...	...	...	10 0	10 0	8 0	10 0 [h]	9 8	10 0	Panga. 4 0 0	4 0 0	4 0 0	Purnea.	36	
32 0	...	20 0	13 0	13 0	9 8	10 0 [i] / 9 8	10 0 / 9 8	9 8	Panga. 3 12 0 / Karkatch. 4 0 0	3 14 0	4 0 0 / 4 0 0	Malda.	37	
New 43 0	...	15 0	18 0	18 0	11 8	10 8 [j]	10 8	10 0	3 10 0	3 10 0	3 12 0	Santhal Parganas.	38	
												ORISSA.		
...	...	...	15 1	15 1	13 2	13 0 [k]	12 0	13 0	3 0 0	3 0 0	3 2 0	Cuttack	39	Orissa Division.
...	...	...	10 0	10 12	8 0 to 9 8	11 0 [l]	11 0	10 8	Panga. 3 8 0	3 8 0	3 12 0	Balasore.	40	
...	...	...	15 0	15 0	...	7 8 [m]	8 0	...	1 ...	...	...	Angul.	41	
	..	...	10 8	9 3	7 4	13 0 [n]	13 0	13 8	13 1 0	3 1 0	2 14 0	Puri.	42	
												CHOTA NAGPUR.		
14 8	14 8	18 0	9 8	9 8	9 0	8 8	8 8	8 0	Panga. 14 7 0	4 7 0	5 0 0	Hazaribagh.	43	Chota Nagpur Division.
17 0	17 0	14 0	6 0 to 6 8	6 0 to 6 8	6 0 to 6 12	9 12	9 12	9 0	Panga. 14 1 0	4 1 0	4 6 0	Ranchi.	44	
12 8	13 8	11 13	11 4	11 4	10 2	10 2	10 2	8 7	1 ...	..	...	Palamau.	45	
20 0	...	...	12 0	11 8	10 0	10 12 [o]	10 10	10 0	Panga. 3 8 0	3 10 0	3 14 0	Manbhum.	46	
...	...	...	10 0	10 0	8 0	9 0	9 0	9 0	4 4 0	4 4 0	3 8 0	Singhbhum.	47	

g. In the subdivisions the retail prices of salt per rupee are—Banka 10 seers; Madhipura 10 seers; Supaul 10 seers.
h. In the subdivisions the retail prices of salt per rupee are—Kishanganj 9 seers; Arraria 9 seers.
i. At Balia Nawabganj the retail price of salt is 10 seers per rupee.
j. In the subdivisions the retail prices of salt per rupee are—Deoghur 10 seers (panga); Godda 10 seers; Jamtara 11 seers; Pakaur 11 seers (karkatch); Rajmahal 11 seers.
k. In the subdivisions the retail prices of salt per rupee are—Jajpur 10 seers 8 chitaks (panga); Kendrapara 10 seers (panga).
l. At Bhadrak the retail price of salt is 10½ seers per rupee.
m. In the marts in the interior of the district the retail prices of salt per rupee are—Sankhpur 8½ seers; Rasipara 9 seers.
n. At Khurda the retail price of salt is 13 seers per rupee.
o. Gobindpur return not received.

Published for general information.

W. C. MACPHERSON,

Offg. Secretary to the Govt. of Bengal.

PRICES-CURRENT (wholesale) of Food-grains, Firewood, &c.,

Number.	Marts.	Rice (best sort).			Common rice (*mota chaul*).			Wheat (*Triticum sativum*).			Barley (*Hordeum vulgare*).		
		Present return.	Next preceding return.	Corresponding return of last year.	Present return.	Next preceding return.	Corresponding return of last year.	Present return.	Next preceding return.	Corresponding return of last year.	Present return.	Next preceding return.	Corresponding return of last year.
1	2	3	4	5	6	7	8	9	10	11	12	13	14
		Rs. A. P.	Rs. A. P.	Rs. A. P.	Rs. A. P.	Rs. A. P.	Rs. A. P.	Rs. A. P.	Rs. A. P.	Rs. A. P.	Rs. A. P.	Rs. A. P.	Rs. A. P.
1	Calcutta ...	5 4 0	5 4 0	5 4 0	3 12 0	3 12 0	4 4 0	3 8 0	3 0	3 8 0	2 6 0	2 6 0	2 6 0
2	Burdwan ...	4 12 0	5 0 0	4 12 0	3 9 0	3 11 0	3 8 0	...	...	...	...	...	...
3	Midnapore ...	4 0 0	4 0 0	4 8 0	3 4 0	3 3 0	3 10 0	...	...	...	...	...	...
4	Pabna ..	6 10 0	6 10 0	6 11 0	3 8 6	3 5 0	4 0 0	2 8 6	2 8 6	2 6 9	...	...	...
5	Rangpur ...	5 0 0	5 0 0	7 0 0	4 0 0	3 12 0	4 8 0	3 12 0	3 12 0	3 12 0	...	...	...
6	Dacca ...	4 0 0	4 0 0	5 8 0	3 6 0	3 4 0	4 13 0	3 4 0	3 4 0	3 8 0	2 0 0	2 0 0	2 12 0
7	Chittagong ...	...	...	...	3 6 0	3 6 0	3 12 0	...	...	...	...	...	...
8	Patna ...	3 15 0	3 12 0	4 2 6	3 4 0	3 10 0	3 5 6	2 13 0	2 13 6	2 12 0	2 0 0	2 1 0	2 1 0
9	Muzaffarpur ...	5 0 0	5 0 0	4 7 0	3 5 3	3 5 3	3 5 3	2 12 0	2 12 0	3 3 0	...	2 0 0	1 11 6
10	Bhagalpur ..	4 3 6	4 3 0	4 3 6	3 10 6	3 8 0	3 8 3	2 14 0	2 14 0	3 0 0	2 0 6	2 0 0	2 0 0
11	Cuttack ...	4 4 0	4 4 0	3 15 0	2 13 0	2 13 0	3 3 0	3 4 6	3 3 0	3 6 0	...	...	...
12	Ranchi ...	4 10 9	4 10 9	4 3 6	2 13 6	2 13 6	2 15 0	4 3 0 to 5 0 0	4 3 0 to 5 0 0	5 10 0 to 5 0 0	3 10 0	2 13 6	2 13 8 to 2 14 8

CALCUTTA,

The 22nd September 1902.

Juar or Cholum (*Sorghum vulgare*).			Bajra or Cumbu (*Pennisetum typhoideum*).			Marua or Ragi (*Eleusine coracana*).			Gram, Chana, Chola, Kadalay, or Sunaga (*Cicer arietinum*).		
Present return.	Next preceding return.	Corresponding return of last year.	Present return.	Next preceding return.	Corresponding return of last year.	Present return.	Next preceding return.	Corresponding return of last year.	Present return.	Next preceding return.	Corresponding return of last year.
15	16	17	18	19	20	21	22	23	24	25	26
Rs. A. P.	Rs. A. P.	Rs. A. P.	Rs. A. P.	Rs. A. P.	Rs. A. P.	Rs. A. P.	Rs. A. P.	Rs. A. P.	Rs. A. P.	Rs. A. P.	Rs. A. P.
2 6 0	2 6 0	2 4 0	2 8 0	2 8 0	3 4 0	...	...	...	2 8 0	2 8 0	2 12 0
...	...	...	...	...	...	...	...	...	2 8 0	2 6 0	2 12 0
...	...	...	...	...	...	...	...	...	2 8 0	2 8 0	3 0 0
...	...	...	...	...	...	...	...	...	2 10 6	2 10 6	3 5 0
...	...	...	...	...	...	...	...	...	2 8 0	2 8 0	3 2 0
...	...	...	...	...	...	...	...	...	4 0 0	4 0 0	3 3 0
...	...	...	...	...	...	...	...	...	3 8 0	3 6 0	3 14 0
White. 2 7 0	2 7 0	2 5 0	...	...	...	...	...	...	2 15 0	2 1 6	2 9 6
Raksa. 1 7 0	1 15 0										
...	...	...	...	...	...	1 10 6	1 13 0	1 9 6	2 0 0	2 0 0	2 5 6
...	...	...	...	...	...	...	...	...	2 4 0	2 4 0	2 10 0
...	...	...	...	...	...	...	...	...	2 5 6	2 6 3	2 14 0
...	...	...	...	...	...	...	...	...	3 1 0 to 3 4 7	3 3 2	3 3 0 to 3 7 0

Indian-corn or maize (*Zea mays*).			Arhar dal or Thur—Cadjan pea (*Cajanus indicus*).			Linseed.			Mustard and Rapeseed.		
Present return.	Next preceding return.	Corresponding return of last year.	Present return.	Next preceding return.	Corresponding return of last year.	Present return.	Next preceding return.	Corresponding return of last year.	Present return.	Next preceding return.	Corresponding return of last year.
27	28	29	30	31	32	33	34	35	36	37	38
Rs. A. P.	Rs. A. P.	Rs. A. P.	Rs. A. P.	Rs. A. P.	Rs. A. P.	Rs. A. P.	Rs. A. P.	Rs. A. P.	Rs. A. P.	Rs. A. P.	Rs. A. P.
2 4 0	2 2 0	2 10 0	4 0 0	4 4 0	3 12 0	6 12 0	6 12 0	7 0 0	5 0 0	5 0 0	4 12 0
...	...	...	3 3 0	3 3 0	3 12 0	...	...	...	4 4 0	4 6 0	5 0 0
									Black mustard.		
...	...	...	4 0 0	4 0 0	4 12 0	6 8 0	6 8 0	5 8 0	4 10 0 to 4 12 0	4 10 0 to 4 12 0	4 0 0 to 5 4 0
									Rapeseed.		
									4 12 0	4 14 0	4 4 0
...	...	...	4 5 0	4 5 0	5 5 0	4 8 0	4 8 0	6 0 0	6 4 0	6 4 0	5 9 0
3 2 0	3 2 0	3 4 0	4 0 0	4 0 0	5 4 0	...	...	...	4 8 0	4 8 0	5 4 0
...	...	...	4 0 0	4 0 0	4 4 0	...	...	...	...	...	...
...	...	...	4 8 0	4 12 0	5 4 0	...	...	...	4 5 0	4 8 0	5 8 0
1 11 6	1 14 0	2 1 0	1 13 0	2 5 0	2 8 0	5 0 0	6 0 0	5 10 0	4 3 0	4 6 0	5 0 0
1 11 9	1 15 3	1 14 6	2 15 3	2 13 9	2 15 3	...	...	...	...	...	...
									Rapeseed.		
1 14 6	1 14 6	1 15 0	3 2 0	3 2 0	3 12 0	6 0 0	6 0 0	...	4 0 6	4 6 0	5 0 0
									Mustard		
									4 0 0	4 0 0	
...	...	...	2 8 0	2 7 0	2 14 6	...	...	...	4 4 9	4 4 9	4 5 0
...	...	...	6 2 6 to 6 10 0	6 2 6 to 6 10 0	5 15 0 to 6 10 6	6 10 0	6 10 0	5 0 0	5 0 0	5 0 0	5 2 6 to 5 5 3

40 STANDARD SEERS.

Til or jinjili seed.			Sugar (raw).			Cotton, cleaned.			Jute		
Present return.	Next preceding return.	Corresponding return of last year.	Present return.	Next preceding return.	Corresponding return of last year.	Present return.	Next preceding return.	Corresponding return of last year.	Present return.	Next preceding return.	Corresponding return of last year.
39	40	41	42	43	44	45	46	47	48	49	50
Rs. A. P.	Rs. A. P.	Rs. A. P.	Rs. A. P.	Rs. A. P.	Rs. A. P.	Rs. A. P.	Rs. A. P.	Rs. A. P.	Rs. A. P.	Rs. A. P.	Rs. A. P.
4 8 0	4 12 0	4 12 0	4 4 0	4 4 0	4 0 0	15 0 0	15 0 0	17 0 0	5 4 0	5 4 0	4 12 0
...	...	...	4 0 0	4 0 0	4 4 0	20 0 0	20 0 0	17 12 0	...	...	...
...	...	...	3 4 0 to 3 8 0	3 4 0 to 3 8 0	3 8 0 to 4 0 0	20 0 0	20 0 0	20 0 0	...	...	...
...	...	...	3 13 0	3 10 0	4 8 0	21 0 0	21 0 0	20 0 0	4 14 0	5 2 0	5 0 0
...	...	...	4 0 0	4 0 0	6 4 0	...	...	...	4 8 0	4 0 0	5 0 0
...	...	...	4 4 0	4 2 0	5 14 0	...	...	...	4 8 0	4 8 0	5 0 0
...	...	...	4 12 0	5 0 0	5 10 0	14 8 0	14 8 0	14 8 0	...	...	...
5 11 0	5 10 0	4 14 0	2 12 0	2 12 0	3 8 0	15 0 0	15 0 0	16 0 0	3 8 0	4 4 0	3 12 0
...	...	...	2 10 6	2 10 6	3 10 0	...	...	...	...	...	...
...	...	...	4 1 0	4 1 0	5 5 0	19 0 0	19 0 0	17 0 0	...	...	...
4 2 6	4 1 0	4 6 0	4 8 0	4 8 0	4 8 0	20 0 0	20 0 0	22 0 0	...	...	...
...	...	...	4 0 0 to 4 7 0	4 0 0	4 0 0 to 5 0 0	20 0 0	20 0 0	22 12 0	...	...	...

Ghi (clarified butter).			Tobacco leaf.			Hides (cow).			Grass.		
Present return.	Next preceding return.	Corresponding return of last year.	Present return.	Next preceding return.	Corresponding return of last year.	Present return.	Next preceding return.	Corresponding return of last year.	Present return.	Next preceding return.	Corresponding return of last year.
51	52	53	54	55	56	57	58	59	60	61	62
Rs. A. P.	Rs. A. P.	Rs. A. P.	Rs. A. P.	Rs. A. P.	Rs. A. P.	Rs. A. P.	Rs. A. P.	Rs. A. P.	Rs. A. P.	Rs. A. P.	Rs. A. P.
						Per 100 pieces.					
39 0 0	39 0 0	40 0 0	9 0 0	9 0 0	9 0 0	250 0 0	250 0 0	250 0 0	0 14 0	1 0 0	0 13 9
32 0 0	30 0 0	41 0 0	...	...	...	...	...	...	...	...	...
				Madhukhali.			Uncleaned hide per piece.				
30 0 0	30 8 0	41 0 0	5 8 0 to 6 12 0	5 8 0 to 6 10 0	5 8 0 to 7 8 0	1 0 0 to 2 8 0	1 0 0 to 2 8 0	1 0 0 to 2 2 0	...	...	...
				Pulta.			Cleaned hide per piece.				
						1 4 0 to 2 12 0	1 4 0 to 2 12 0	1 2 0 to 2 4 0			
53 0 0	53 0 0	54 0 0	6 8 0	6 8 0	7 0 0	...	...	...	...	...	...
36 0 0	36 0 0	42 0 0	10 0 0	10 0 0	9 0 0	...	...	...	0 2 6	0 2 6	0 2 6
						Per maund.					
40 0 0	40 0 0	45 0 0	7 8 0	7 8 0	8 0 0	25 0 0	25 0 0	25 0 0	0 4 0	0 3 0	0 3 0
						Per maund.					
32 8 0	32 8 0	43 0 0	7 0 0	7 8 0	11 0 0	16 0 0	16 8 0	18 4 0	...	...	...
30 0 0	30 0 0	35 0 0	4 0 0	4 0 0	3 0 0	...	...	...	0 4 0	0 4 0	0 4 0
29 1 6	29 1 6	35 9 0	8 0 0	8 0 0	8 0 0	...	...	...	...	...	...
32 0 0	32 0 0	40 0 0	8 0 0	8 0 0	...	...	...	...	...	...	...
						Per maund.					
33 12 0	34 8 0	39 12 0	4 4 0	4 4 0	4 4 0	25 0 0	25 0 0	25 0 0	0 7 0	0 7 0	0 8 6
						Per piece.					
30 7 6 to 36 0 0	30 7 6 to 36 0 0	37 10 0 to 45 11 0	6 10 0 to 13 5 3	6 10 0 to 13 5 3	6 8 0 to 13 5 0	1 0 0 to 1 8 0	1 0 0 to 1 8 0	1 4 0 to 2 4 0	0 2 8	0 3 3	0 2 8

1372d

in the undermentioned Marts of Bengal on the 15th September 1902.

STRAW.			JUAR STALKS.			PRICES PER MAUND OF 40 STANDARD SEERS.									MARTS.
						IRON.			FIREWOOD.			SALT.			
Present return.	Next preceding return.	Corresponding return of last year.	Present return.	Next preceding return.	Corresponding return of last year.	Present return.	Next preceding return.	Corresponding return of last year.	Present return.	Next preceding return.	Corresponding return of last year.	Present return.	Next preceding return.	Corresponding return of last year.	
63	64	65	66	67	68	69	70	71	72	73	74	75	76	77	78
Rs. A. P.	Rs. A. P.	Rs. A. P.	Rs. A. P.	Rs. A. P.	Rs. A. P.	Rs. A. P.	Rs. A. P.	Rs. A. P.	Rs. A. P.	Rs. A. P.	Rs. A. P.	Rs. A. P.	Rs. A. P.	Rs. A. P.	
												Panga.			
0 12 0	0 12 0	0 14 0	...	...	...	5 12 0	5 12 0	5 4 0	0 8 0	0 8 0	0 8 0	3 6 0	3 6 0	3 8 0	1. Calcutta.
0 12 0	0 12 0	0 14 0	...	...	...	...	...	...	0 8 0	0 8 0	0 5 6	3 4 0	3 4 0	3 10 0	2. Burdwan.
0 4 3	0 4 8	0 9 6	...	...	...	3 12 0 to 4 4 0	3 12 0 to 4 4 0	4 0 0 to 5 0 0	0 4 0	0 4 0	0 4 0	3 8 0	3 8 0	3 11 0	3. Midnapore.
												Panga.			
1 0 0	1 0 0	1 0 0	...	...	...	7 0 0	7 0 0	7 4 0	0 10 0	0 10 0	0 8 0	3 12 0	3 12 0	3 13 0	4. Pabna.
												Panga.			
0 7 0	0 7 0	0 7 0	...	...	...	7 0 0	7 0 0	7 0 0	0 5 0	0 5 0	0 5 0	3 12 0	3 12 0	4 0 0	5. Rangpur.
												Panga.			
...	...	...	...	...	...	5 0 0	5 0 0	6 0 0	0 5 3	0 5 3	0 5 3	3 12 0	3 10 0	3 14 0	6. Dacca.
...	...	...	...	...	...	4 12 0	4 12 0	5 8 0	...	...	..	3 6 0	3 6 0	3 14 0	7. Chittagong.
...	...	...	...	...	...	4 0 0	5 0 0	5 0 0	0 7 0	0 7 0	0 6 0	3 11 0	3 11 0	3 12 0	8. Patna.
												Panga.			
...	...	...	...	...	...	5 11 6	5 11 6	5 11 6	0 4 0	0 4 0	0 4 0	4 0 0	4 0 0	4 0 0	9. Muzaffarpur.
												Panga.			
...	...	...	...	...	...	5 0 0	5 0 0	5 0 0	0 5 9	0 5 9	0 6 3	3 10 0	3 10 0	3 12 0	10. Bhagalpur.
												Karkatch.			
0 7 0	0 7 0	0 8 0	...	...	...	4 8 0	4 11 0	4 5 0	0 4 0	0 4 0	0 4 0	3 0 0	3 0 0	3 2 0	11. Cuttack.
												Panga.			
0 8 0 to 0 10 0	0 9 0	...	...	...	...	5 10 0	5 10 0	6 0 0	0 4 0	0 4 0	0 4 0	4 1 0	4 1 0	4 6 0	12. Ranchi.

W. C. MACPHERSON,

Offg. Secretary to the Govt. of Bengal.

GOVERNMENT OF BENGAL, IRRIGATION DEPARTMENT.

Approximate return of traffic on the Circular and Eastern Canals for the week ending Saturday, the 20th September 1902, as compared with the corresponding week of the previous year.

Nature of Cargo.	Week ending Saturday, the 20th September 1902.			Week ending Saturday, the 21st September 1901.		
	Number of boats.	Weight of cargo.	Tollage.	Number of boats.	Weight of cargo.	Tollage.
		Mds.	Rs		Mds	Rs.
Rice and paddy	658	85,725	1,183	473	60,530	805
Jute	298	57,475*	934	271	59,775†	974
Firewood	54	33,820	498	96	52,700	796
Other articles	711	1,64,887½	2,029	508	1,07,060	1,283
Total ..	1,721	3,41,912½	4,644	1,348	2,80,065	3,858

* Weight by canal measurement, 5,76[illegible]½ maunds.
† Ditto ditto, 57,762½ ,,

Results of the Meteorological Observations taken at the Alipore Observatory from 14th to 20th September 1902.

Month.	Date.	Maximum in sun.	Number of hours of bright sunshine.	Mean pressure barometer at 32° Fahr.	Temperature. Mean.	Maximum.	Range.	Minimum.	Hygrometry. Mean wet bulb.	Vapour tension.	Dew point.	Humidity.	Wind. Prevailing direction.	Miles recorded.	Rain.	Weather.
1902.		°		Inches.	°	°	°	°	°	Inches	°	%			Inches.	
Sept.	14th	148·9	5·5	29·747	84·3	90·2	10·7	79·5	81·4	1·034	80·3	88	S by W and SSW	93	0·42	Partially cloudy, o, p.
,,	15th	151·7	8·3	·746	84·6	89·9	9·7	80·2	81·7	1·043	80·5	88	SSW, SW by W and SW by S.	66	Nil	Chiefly cloudy.
,,	16th	150·4	5·1	·777	84·0	90·9	11·1	79·8	81·2	1·029	80·1	88	SW by S, SSE and calm.	59	0·21	Partially cloudy, o, t, p.
,,	17th	151·2	5·6	·778	83·6	90·2	11·4	78·8	80·8	1·017	79·7	89	ESE, SE and calm	57	0·09	Partially cloudy, d.
,,	18th	149·2	4·1	·778	84·5	90·7	11·9	78·8	80·8	1·006	79·4	85	SE and S by W ...	34	Nil	Chiefly cloudy.
,,	19th	151·1	6·3	·808	84·0	91·2	12·9	78·3	80·4	0·991	78·9	85	SE and calm ...	53	0·01	Partially cloudy, d.
,,	20th	149·4	7·0	·772	84·1	90·7	12·2	78·5	79·1	·928	77·0	79	SSW and calm ...	64	0·71	Partially cloudy, o, g, p, t, l.

	Inches.
The mean pressure of the seven days	29·772
The average pressure of the corresponding period for 24 years, Surveyor-General's Office	29·679
	Hours.
The total number of hours of bright sunshine	36·9
The maximum possible number of hours of sunshine	85·4
The mean temperature of the seven days	84·2
The average temperature of the corresponding period for 24 years, Surveyor-General's Office	83·3
The extreme variation of temperature	12·9
The maximum temperature	91·2
	Miles.
The highest velocity of the wind in one hour	10
	%
The mean relative humidity	86
The average relative humidity of the corresponding period for 24 years, Surveyor-General's Office	86
	Inches.
The total fall of rain from 14th to 20th September 1902	1·44
The average fall of the corresponding period for 24 years, Surveyor-General's Office	2·31
The total fall from 1st January to 20th September 1902	58·15
The average fall of the corresponding period for 24 years, Surveyor-General's Office	55·95

The mean pressure, temperature, &c., are deduced from the traces of the Barograph and Thermograph, and from eye observations.

The maximum and minimum temperatures are obtained from self-registering thermometers. All the thermometers are verified, and the readings have been corrected to a standard constructed and verified at the Kew Observatory. They are exposed under a thatched shed open at the sides, and are suspended four feet above the ground.

The barometer readings are corrected approximately to those of the standard, Newman's No. 86, formerly at the Surveyor-General's Office.

The hygrometric elements are obtained from Tables III, IV, and V of the official tables computed in the Meteorological Office, and based on Regnault's modifications of August's formula.

The directions and the movement of the wind are taken from the trace of a Beckley's anemograph.

The mouth of the rain-gauge is one foot above the ground.

o, overcast; d, drizzling rain; t, thunder; p, passing temporary showers; g, gloomy; l, lightning.

N.B.—In the weekly abstract from 31st August to 6th September 1902, *read* 29·658 *for* 29·68 as the mean pressure barometer on the 5th September 1902.

G. W. KUCHLER,
for Meteorological Reporter to the Govt. of India and Director-General of Indian Observatories.

METEOROLOGICAL OFFICE, GOVT. OF INDIA;
Alipore (Calcutta), the 22nd September 1902.

EASTERN BENGAL STATE RAILWAY.

Abstract of Principal Commodities carried over the Eastern Bengal State Railway during the month of June 1902 as compared with the same month of the previous year.

No.	Staples.	1902.	1901.	Increase in 1902.	Decrease in 1902.	Explanations of fluctuations by Traffic Superintendent.
		Tons.	Tons.	Tons.	Tons.	
1	Apparel, including drapery, haberdashery, millinery, uniforms, accoutrements, boots and shoes.	27	16	11	.....	
2	Coal and coke carried for the Public and Foreign Railways.	21,000	21,945	.....	945	
3	Cotton—					
	(1) Raw	256	251	15	.....	
	(2) Manufactured—					
	(a) Twist and yarn, European	217	243	.....	26	
	(b) Ditto, Indian	333	317	16	.....	
	(c) Piece-goods, European	1,570	1,419	.....	49	
	(d) Ditto, Indian	108	28	80	.....	
	(e) Others	.....	.....	.....	.....	
4	Chemicals, excepting saltpetre	63	12	51	.....	
5	Drugs—					
	(1) Intoxicating, other than opium	38	44	.....	6	
	(2) Non-intoxicating—					
	(a) Medicinal preparations	.....	.....	.....	.....	
	(b) Others	41	34	7	.....	
6	Dyes and Tans—					
	(1) Al (Morinda citrifolia)	.....	.....	.....	.....	
	(2) Alizarine and Aniline dyes	.....	.....	.....	.....	
	(3) Cutch	23	6	17	.....	
	(4) Indigo	.....	.....	.....	.....	
	(5) Myrabolams	.....	.....	.....	.....	
	(6) Tanning barks	.....	.....	.....	.....	
	(7) Turmeric	459	288	171	.....	
	(8) Others	13	14	.....	1	
7	Fodder—					
	(1) Oilcake	989	817	172	.....	
	(2) Hay, straw and grass	1,435	2,533	.....	1,098	
8	Fruits and vegetables, fresh	528	362	166	.....	
9	Grain and pulse—					
	(1) Gram and pulse	5,020	2,638	2,382	.....	
	(2) Jawar and bajra	.....	.....	.....	.....	
	(3) Rice in the husk	5,226	5,218	.....	.....	
	(4) Do. not in the husk	5,987	5,821	.....	2,087	
	(5) Wheat	1,100	377	723	1,334	
	(6) Do. flour	186	73	113	.....	
	(7) Others	220	73	147	.....	
10	Hides and skins—					
	(1) Hides of cattle—					
	(a) Dressed or tanned	.....	.....	.....	.....	
	(b) Raw	792	466	326	.....	
	(2) Skins of sheep and other animals—					
	(a) Dressed or tanned	.....	.....	.....	.....	
	(b) Raw	49	54	.....	5	
11	Horns	10	1	9	.....	
12	Hemp (Indian) and other fibres, excluding jute.	64	150	.....	86	
13	Jute—					
	(1) Raw	13,010	5,091	7,919	.....	
	(2) Gunny-bags and cloth	3,813	779	3,033	.....	
14	Lac	7	10	.....	3	
15	Leather—					
	(1) Unwrought	.....	4	.....	4	
	(2) Wrought, excepting boots and shoes	.....	.....	.....	.....	
16	Liquors—					
	(1) Ale and beer	23	19	4	.....	
	(2) Spirits of all kinds, including country spirit.	.....	1	.....	1	
	(3) Wine	63	52	11	.....	
	(4) All other sorts, including toddy and fermented liquor, other than ale and beer.	.....	.....	.....	.....	
17	Metals—					
	(1) Brass, unwrought	33	14	19	.....	
	(2) Do., wrought	128	113	15	.....	
	(3) Copper, unwrought	34	16	18	.....	
	(4) Do., wrought	13	11	2	.....	
	(5) Iron and steel—					
	(a) Cast	28	62	.....	34	
	(b) Unwrought	.....	.....	.....	.....	
	(c) Wrought	963	769	194	.....	
	(d) Manufactures	216	226	.....	10	
	(6) Others	210	140	70	.....	
18	Oils—					
	(1) Kerosine	15,893	6,774	9,119	.....	
	(2) Castor	7	5	2	.....	
	(3) Cocoanut	117	118	.....	1	
	(4) Mustard and rape	155	352	.....	197	
	(5) Others	115	68	47	.....	
19	Oilseeds—					
	(1) Castor	32	21	11	.....	
	(2) Earthnuts	.....	.....	.....	.....	
	(3) Linseed	1,693	617	1,076	.....	
	(4) Poppy	.....	.....	.....	.....	
	(5) Rape and mustard	5,132	1,807	3,325	.....	
	(6) Til or jinjili	35	51	.....	16	
	(7) Others	142	2	140	.....	
20	Opium	7	2	5	.....	
21	Paper and pasteboard	519	523	.....	4	
22	Provisions—					
	(1) Dried fruits and nuts	3	.....	3	.....	
	(2) Ghee	43	31	12	.....	
	(3) Others	1,134	1,393	.....	259	

No.	Staples.	1902	1901.	Increase in 1902.	Decrease in 1902.	Explanations of fluctuations by Traffic Superintendent.
		Tons.	Tons.	Tons.	Tons.	
23	Railway Plant, &c., for the Public and Foreign Railways—					153
	(1) Locomotive engines and tenders and parts thereof	59	.....	59	.....	
	(2) Carriages and trucks and parts thereof	4	.....	4	.....	
	(3) Materials—					
	(a) Steel rails and fish-plates	131	2	129	.....	
	(b) Sleepers and keys of steel and cast-iron.	1,214	73	1,141	.....	
	(c) Others	181	52	129	.....	
24	Salt	5,708	5,773	.....	64	
25	Saltpetre and other saline substances—					
	(1) Saltpetre	... .	5	.....	5	
	(2) Other saline substances	151	129	22	.....	
26	Silk—					
	(1) Raw—					
	(a) Foreign	.....	.....	.....	.....	
	(b) Indian	14	13	1	.....	
	(2) Piece-goods—					
	(a) Foreign	.....	.....	.....	.....	
	(b) Indian	.....	.....	.....	.....	
27	Spices—					
	(1) Betelnuts	813	605	168	.....	
	(2) Cardamoms	10	4	6	.....	
	(3) Chillies	291	83	208	.....	
	(4) Ginger	449	44	405	.....	
	(5) Pepper	26	20	6	.....	
	(6) Others	95	141	.....	46	
28	Stone and lime	2,015	2,109	.....	94	
29	Sugar—					
	(1) Refined or crystallized, including sugar-candy.	593	392	201	.....	
	(2) Unrefined—					
	(a) Sugar	412	846	.....	434	
	(b) Gur, *rab*, jaggery, molasses, and other saccharine produce.	1,701	1,434	.....	333	
30	Tea—					
	(1) Foreign	.....	.....	.....	.....	
	(2) Indian	4,282	3,474	808	.....	
31	Tobacco—					
	(1) Unmanufactured	3,388	4,038	.....	750	
	(2) Manufactured—					
	(a) Cigars	..	11	.....	11	
	(b) Other sorts					
32	Wood—					
	(1) Timber, unwrought	1,455	625	830	.....	
	(2) Manufactures	129	201	.....	72	
33	Wool—					
	(1) Raw	109	124	.....	15	
	(2) Manufactured—					
	(a) Carpets and rugs	.				
	(b) Piece-goods, European	17	8	9	.....	
	(c) Ditto, Indian					
	(d) Other sorts of manufactures ..					
34	All other articles of merchandise	7,637	6,380	1,257	. ...	
	Total ..	116,337	91,395	33,832	8,890	

HARPRASAD DAR,

CALCUTTA, *the 20th September 1902.* for *Examiner of Accounts, E. B. S. Railway.*

Weekly Return of Traffic Receipts on Indian Railways.

EASTERN BENGAL STATE RAILWAY.

(INCLUDING N. B., K.-D., DACCA, AND ASSAM-BEHAR SECTIONS.)

Approximate Return of Traffic and Mileage for the week ended 6th September 1902 on 861 miles open.

	Coaching Traffic.		Merchandise and Mineral Traffic.		Other earnings (including ferry).	Total earnings.	Traffic Train-miles run.		
	No. of passengers.	Coaching receipts.	Weight carried.	Receipts.			Coaching.	Merchandise.	Total.
		Rs. A. P.	Mds. S.	Rs. A. P.	Rs. A. P.	Rs. A. P.			
Total traffic for the week ...	218,160	96,240 0 0	12,20,080 0	3,08,020 0 0	13,030 0 0	4,18,190 0 0	37,402	50,065	87,467
Or per mile of railway	253	112 0 0	1,418 0	359 0 0	1 0 0*	472 0 0*	...	...	...
For previous 9 weeks of half-year	1,896,470	8,87,320 0 0	83,40,180 0	15,60,030 0 0	1,34,610 0 0	25,81,960 0 0	330,406	329,342	659,748
Total for 10 weeks ...	2,114,630	9,83,560 0 0	95,61,160 0	18,68,950 0 0	1,47,640 0 0	30,00,150 0 0	367,808	379,407	747,215
COMPARISON.									
Total for corresponding week of previous year	197,131	88,362 0 0	11,08,905 0	2,53,565 0 0	11,415 0 0	3,53,342 0 0	37,048	46,146	83,194
Per mile of railway corresponding week of previous year ...	231	103 0 0	1,309 0	297 0 0	1 0 0	401 0 0	...	...	...
Total to corresponding date of previous year	2,069,822	9,13,724 0 0	96,80,953 0	17,64,395 0 0	2,56,377 0 0	28,84,496 0 0	364,455	400,301	764,756

* Excluding ferry earnings.
(a) The increase is chiefly due to heavy jute traffic.

BRAHMAPUTRA-SULTANPUR RAILWAY.

Approximate Return of Traffic and Mileage for the week ended 6th September 1902 on 59·37 miles open.

	Coaching Traffic.		Merchandise and Mineral Traffic		Other earnings (including ferry).	Total earnings.	Traffic Train-miles run.		
	No. of passengers.	Coaching receipts.	Weight carried.	Receipts.			Coaching.	Merchandise.	Total.
		Rs. A. P.	Mds. S.	Rs. A. P.	Rs. A. P.	Rs. A. P.			
Total traffic for the week ...	6,800	1,720 0 0	32,170 0	3,810 0 0	30 0 0	5,560 0 0	898	1,142	2,040
Or per mile of railway ...	115	29 0 0	542 0	64 0 0	1 0 0	94 0 0	...	...	...
For previous 9 weeks of half-year	56,860	17,120 0 0	2,62,980 0	25,970 0 0	430 0 0	43,520 0 0	9,540	9,336	18,876
Total for 10 weeks ...	63,660	18,840 0 0	2,95,150 0	29,780 0 0	460 0 0	49,080 0 0	10,438	10,478	20,916
COMPARISON.									
Total for corresponding week of previous year	5,127	1,332 0 0	23,155 0	2,595 0 0	21 0 0	3,918 0 0	890	980	1,800
Per mile of railway corresponding week of previous year ...	87	23 0 0	392 0	43 0 0	... .	66 0 0	...	...	...
Total to corresponding date of previous year	61,416	16,827 0 0	2,60,346 0	26,110 0 0	234 0 0	43,161 0 0	8,441	12,880	21,321

MYMENSINGH-JAGANNATHGANJ RAILWAY.

Approximate Return of Traffic and Mileage for the week ended 6th September 1902 on 53·37 miles open.

	Coaching Traffic.		Merchandise and Mineral Traffic.		Other earnings (including ferry).	Total earnings.	Traffic Train-miles run.		
	No. of passengers.	Coaching receipts.	Weight carried.	Receipts.			Coaching.	Merchandise.	Total.
		Rs. A. P.	Mds. S.	Rs. A. P.	Rs. A. P.	Rs. A. P.			
Total traffic for the week ...	7,990	2,240 0 0	32,690 0	1,550 0 0	30 0 0	3,820 0 0	1,272	1,002	2,274
Or per mile of railway ...	150	42 0 0	613 0	29 0 0	1 0 0	72 0 0	...	...	...
For previous 9 weeks of half-year	69,220	18,640 0 0	1,67,790 0	7,300 0 0	240 0 0	26,180 0 0	10,453	7,956	18,409
Total for 10 weeks ...	77,210	20,880 0 0	2,00,480 0	8,850 0 0	270 0 0	30,000 0 0	11,725	8,958	20,683
COMPARISON.									
Total for corresponding week of previous year	7,395	1,732 0 0	25,988 0	874 0 0	40 0 0	2,646 0 0	1,081	403	1,484
Per mile of railway corresponding week of previous year ...	139	33 0 0	487 0	16 0 0	1 0 0	50 0 0	...	...	...
Total to corresponding date of previous year	74,202	19,266 0 0	1,59,515 0	6,091 0 0	272 0 0	25,629 0 0	10,943	7,016	17,964

DACCA STATE RAILWAY.

Approximate Return of Traffic and Mileage for the week ended 6th September 1902 on 86 miles open.

	Coaching Traffic.		Merchandise and Mineral Traffic.		Other earnings.	Total earnings.	Traffic Train-miles run.		
	No. of passengers.	Coaching receipts.	Weight carried.	Receipts.			Coaching.	Merchandise.	Total.
		Rs. A. P.	Mds. S.	Rs. A. P.	Rs. A. P.	Rs. A. P.			
Total traffic for the week ...	29,900	8,140 0 0	31,360 0	2,630 0 0	110 0 0	10,880 0 0	2,783	1,525	4,308
Or per mile of railway	348	95 0 0	365 0	31 0 0	1 0 0	127 0 0	"		...
For previous 9 weeks of half-year	238,900	66,200 0 0	2,15,990 0	17,220 0 0	1,910 0 0	85,330 0 0	24,960	13,652	38,612
Total for 10 weeks ...	268,800	74,340 0 0	2,47,350 0	19 850 0 0	2,020 0 0	96,210 0 0	27,743	15,177	42,920
Comparison.									
Total for corresponding week of previous year	25,255	7,843 0 0	39,658 0	4,401 0 0	54 0 0	12,297 0 0	2,875	2,027	4,902
Per mile of railway corresponding week of previous year ...	305	91 0 0	461 0	51 0 0	1 0 0	143 0 0	..	.	...
Total to corresponding date of previous year	240,472	69,944 0 0	3,35,428 0	29,607 0 0	5,302 0 0	1,04,853 0 0	28,491	18,817	47,80

COOCH BEHAR STATE RAILWAY.

Approximate Return of Traffic and Mileage for the week ended 6th September 1902 on 33·78 miles open.

	Coaching Traffic.		Merchandise and Mineral Traffic.		Other earnings (including ferry).	Total earnings.	Traffic Train-miles run.		
	No. of passengers.	Coaching receipts.	Weight carried.	Receipts.			Coaching.	Merchandise.	Total.
		Rs. A. P.	Mds. S.	Rs. A. P.	Rs. A. P.	Rs. A. P.			
Total traffic for the week ...	2,440	740 0 0	9,230 0	1,270 0 0	40 0 0	2,050 0 0	295	2,081	2,376
Or per mile of railway ...	72	22 0 0	273 0	38 0 0	1 0 0	61 0 0	...	...	...
For previous 9 weeks of half-year	22,580	7,740 0 0	69,060 0	8,810 0 0	160 0 0	16,410 0 0	2,456	17,842	20,298
Total for 10 weeks ..	25 020	8,480 0 0	78,290 0	9,730 0 0	200 0 0	18,460 0 0	2,751	19,923	22,674
Comparison.									
Total for corresponding week of previous year ..	1,959	627 0 0	6,770 0	1,188 0 0	113 0 0	1,928 0 0	323	334	657
Per mile of railway corresponding week of previous year	58	19 0 0	200 0	35 0 0	...	54 0 0	...	...	...
Total to corresponding date of previous year	19,688	7,379 0 0	70,637 0	7,980 0 0	1,371 0 0	16,630 0 0	2,375	6,871	9,246

*Ballast train-miles, 1,900.

BENGAL AND NORTH-WESTERN RAILWAY.

Approximate Return of Traffic for the week ending 6th September 1902 on 1,361 miles open.

	Coaching Traffic.		Merchandise and Mineral Traffic		Other earnings (estimated) including steam-boat.	Total earnings.	Traffic Train miles run.		
	No. of passengers.	Receipts.	Weight carried.	Receipts			Coaching.	Merchandise.	Total.
		Rs	Mds.	Rs.	Rs.	Rs.			
Total traffic for the week on 1,361 miles open	174,470	(a)63,140	4,88,880	(b)54,750	11,400	(a)1,29,290	40,476	(c)31,138	71,614
Or per mile of railway	128·36	50·07	387·69	43·42	9·04	102·53	...	...	...
For previous 8½ weeks of half-year	1,640,180	6,41,930	47,96,800	5,34,350	1,41,170	13,17,450	357,455	272,463	629,918
Total for 9½ weeks ...	1,814,650	7,05,070	52,85,680	5,89,100	1,52,570	14,46,740	397,931	303,601	701,532
Comparison.									
Total for corresponding week of previous year on 1,351 miles open	154,711	56,025	3,56,796	40,436	10,956	1,07,417	35,826	(d)25,491	61,317
Per mile of corresponding week of previous year	123·67	44 79	285·31	32·32	8·75	85·86	...	...	...
Total to corresponding date of previous year	1,779,700	6,75,696	55,03,213	6,07,849	1,60,399	14,43,944	339,602	283,550	623,212

(a) Increase due to improved traffic.
(b) Out of the increase of Rs. 14,414, Rs. 6,054 are due to railway material and ballast trains, the remainder occurred in public traffic.
(c) Includes 6,634 miles of ballast trains run on open line.
(d) ,, 6,730 ,, ,, ,,

ASSAM-BENGAL RAILWAY.

Approximate Return of Traffic for the week ended 6th September 1902 on 558 miles open for all descriptions of traffic additional 31 miles for goods and parcels traffic only.

	Coaching Traffic.		Merchandise and Mineral Traffic.		Other earnings.	Total earnings.	Traffic Train-mi	
	No. of passengers.	Coaching receipts.	Weight carried.	Receipts.			Coaching.	Merchandise.
		Rs. A. P.	Mds. S.	Rs. A. P.	Rs. A. P.	Rs. A. P.		
Total traffic for the week ...	27,677	16,745 0 0	1,51,016 0	15,772 0 0	1,835 0 0	34,352 0 0	5,892	8,268
Or per mile of railway ...	49·60	30·01	256·39	26·78	3·12	59·91	10·56	14·0
For previous 9 weeks of half-year	242,840	1,43,958 0 0	14,04,404 0	1,31,637 0 0	12,227 0 0	2,8[illegible],822 0 0	56,411	69,979
Total for 10 weeks ...	270,517	1,60,703 0 0	15,55,420 0	1,47,409 0 0	14,062 0 0	3,22,174 0 0	62,303	78,247
Comparison.								
Total for corresponding week of previous year	20,923	12,192 0 0	1,20,691 0	17,294 0 0	550 0 0	30,045 0 0	6,260	5,902
Per mile of railway corresponding week of previous year ...	37·50	21·85	208·81	29·92	0·97	52·74	11·22	10·2
Total to corresponding date of previous year	2,52,653	1,40,669 0 0	10,98,396 0	1,66,076 0 0	13,094 0 0	3,29,379 0 0	63,354	59,623

FINANCIAL YEAR.

Approximate Statement of Gross Receipts of the Assam-Bengal Railway.

Receipts for week ending 6th September 1902.			Receipts for week ending 7th September 1901.			Total receipts from 1st April 1902 to 6th September 1902.			Total receipts from 1st April 1901 to 7th September 1901.			Total increase in 1902.
Mean mileage worked.	Receipts.	Per mile worked.	Mean mileage worked.	Receipts.	Per mile worked.	Mean mileage worked.	Total receipts.	Per mile worked.	Mean mileage worked	Total receipts.	Per mile worked	
	Rs.	Rs.		Rs.	Rs.		Rs.			Rs.		Rs.
589	34,352	59·91	578	30,045	52·74	589	7,77,148	...	578	8,50,176	...	.....

SEGOWLIE-RAKSAUL BRANCH RAILWAY.

(Worked by the B. & N.-W. Railway.)

Approximate Return of Traffic for the week ending 13th September 1902 on 18 miles open.

	Coaching Traffic.		Merchandise and Mineral Traffic.		Other earnings (estimated).	Total earnings.	Traffic Tra	
	Passengers carried.	Receipts.	Weight carried.	Receipts.			Coaching.	M
	No.	Rs.	Mds.	Rs.	Rs.	Rs.		
Total traffic for the week on 18 miles open	1,798	203	9,980	530	8	736	404	
Or per mile of railway	99·89	11·28	554·44	29·44	0·17	40·89	.....	
For previous 9½ weeks of half-year	13,606	1,784	77,954	2,117	67	3,968	3,233	
Total for 10½ weeks ...	15,404	1,987	87,934	2,647	70	4,704	3,637	
Comparison.								
Total for corresponding week of previous year on 18 miles open	2,563	401	6,602	216	11	628	442	
Per mile of corresponding week of previous year	142·39	22·27	366·78	12·00	0·64	34·91	.....	
Total to corresponding date of previous year	26,578	3,889	79,323	2,318	118	6,325	4,615	

EASTERN BENGAL STATE RAILWAY.

(INCLUDING N. B., K.-D., PACCA AND ASSAM-BEHAR SECTIONS.)

Approximate Return of Traffic and Mileage for the week ended 13th September 1902 on 861 miles open.

	Coaching Traffic.		Merchandise and Mineral Traffic.		Other earnings (including ferry).	Total earnings.	Traffic Train-miles run.		
	Number of passengers.	Coaching receipts.	Weight carried.	Receipts.			Coaching.	Merchandise.	Total.
		Rs. A. P.	Mds. s.	Rs. A. P.	Rs. A. P.	Rs. A. P.			
Total traffic for the week ...	223,520	97,280 0 0	1,175,630 0	2,69,110 0 0	13,200 0 0	8,78,590 0 0	37,002	47,807	84,809
Per mile of railway ...	260	113 0 0	1,365 0	313 0 0	1 0 0*	427 0 0*	...	...	...
For previous 10 weeks of half-year	2,114,630	9,83,560 0 0	9,531,160 0	18,68,950 0 0	1,47,640 0 0	30,00,150 0 0	367,808	379,407	747,215
Total for 11 weeks	2,338,150	10,80,840 0 0	10,736,790 0	21,38,060 0 0	1,60,840 0 0	33,78,740 0 0	404,810	427,214	832,024
COMPARISON.									
Total for corresponding week of previous year	215,027	85,118 0 0	1,075,369 0	2,27,247 0 0	11,104 0 0	3,21,469 0 0	37,818	47,101	84,919
Per mile of railway corresponding week of previous year	252	97 0 0	1,259 0	266 0 0	1 0 0	364 0 0	...	...	...
Total to corresponding date of previous year	2,284,540	9,96,841 0 0	10,956,322 0	19,91,643 0 0	2,17,482 0 0	32,05,965 0 0	402,273	447,402	849,675

* Excluding ferry earnings.
Increase under goods is due to the heavy Jute traffic.

BRAHMAPUTRA-SULTANPUR RAILWAY.

Approximate Return of Traffic and Mileage for the week ended 13th September 1902 on 59·37 miles open.

	Coaching Traffic.		Merchandise and Mineral Traffic.		Other earnings (including ferry).	Total earnings.	Traffic Train-miles run.		
	Number of passengers.	Coaching receipts.	Weight carried.	Receipts.			Coaching.	Merchandise.	Total.
		Rs. A. P.	Mds. s.	Rs. A. P.	Rs. A. P.	Rs. A. P.			
Total traffic for the week ...	6,440	1,800 0 0	35,240 0	4,080 0 0	50 0 0	5,030 0 0	898	1,142	2,040
Per mile of railway	108	30 0 0	594 0	69 0 0	1 0 0	100 0 0	...	...	...
For previous 10 weeks of half-year	63,660	18,840 0 0	295,150 0	20,780 0 0	460 0 0	40,080 0 0	10,438	10,478	20,916
Total for 11 weeks ...	70,100	20,640 0 0	330,390 0	33,860 0 0	570 0 0	55,010 0 0	11,336	11,620	23,056
COMPARISON.									
Total for corresponding week of previous year	5,211	1,401 0 0	16,719 0	1,894 0 0	26 0 0	3,321 0 0	985	695	
Per mile of railway corresponding week of previous year ...	88	24 0 0	283 0	32 0 0	...	56 0 0	...	...	
Total to corresponding date of previous year	66,627	18,228 0 0	277,058 0	28,004 0 0	250 0 0	40,482 0 0	9,426	13,575	23,001

MYMENSINGH-JAGANNATHGANJ RAILWAY.

Approximate Return of Traffic and Mileage for the week ended 13th September 1902 on 53·37 miles open.

	Coaching Traffic.		Merchandise and Mineral Traffic.		Other earnings (including ferry).	Total earnings.	Traffic Train-miles run.		
	Number of passengers.	Coaching receipts.	Weight carried.	Receipts.			Coaching.	Merchandise.	Total.
		Rs. A. P.	Mds. s	Rs. A. P.	Rs. A. P.	Rs. A. P.			
Total traffic for the week ...	8,420	2,220 0 0	43,040 0	1,790 0 0	30 0 0	4,040 0 0	1,272	952	2,224
Per mile of railway ...	158	42 0 0	818 0	33 0 0	1 0 0	76 0 0	...	...	...
For previous 10 weeks of half-year	77,210	20,880 0 0	200,480 0	8,850 0 0	270 0 0	30,000 0 0	11,725	8,958	20,683
Total for 11 weeks ...	85,630	23,100 0 0	244,120 0	10,640 0 0	300 0 0	34,040 0 0	12,997	9,910	22,907
COMPARISON.									
Total for corresponding week of previous year	6,147	1,536 0 0	11,062 0	536 0 0	24 0 0	2,146 0 0	977	437	1,414
Per mile of railway corresponding week of previous year ...	115	29 0 0	224 0	11 0 0	...	40 0 0	...	...	...
Total to corresponding date of previous year	80,349	20,802 0 0	171,477 0	6 677 0 0	296 0 0	27,775 0 0	11,925	7,453	19,378

DACCA STATE RAILWAY.

Approximate Return of Traffic and Mileage for the week ended 13th September 1902 on 86 miles open.

	Coaching Traffic.		Merchandise and Mineral Traffic.		Other earnings.	Total earnings.	Traffic Train.	
	Number of passengers.	Coaching receipts.	Weight carried.	Receipts.			Coaching.	Merchandise.
		Rs. A. P.	Mds. s.	Rs. A. P.	Rs. A. P.	Rs. A. P.		
Total traffic for the week ...	25,270	6,490 0 0	34,880 0	2,800 0 0	50 0 0	3,340 0 0	2,790	1,51
Or per mile of railway	271	75 0 0	406 0	33 0 0	1 0 0	109 0 0	...	...
For previous 10 weeks of half-year	268,860	74,340 0 0	2,47,350 0	19,850 0 0	2,02[illegible] 0 0	96,210 0 0	27,743	15,17
Total for 11 weeks ...	292,130	80,830 0 0	2,82,230 0	22,650 0 0	2,070 0 0	1,05,550 0 0	30,533	16,69
Comparison								
Total for corresponding week of previous year	38,380	9,573 0 0	49,055 [illegible]	4,863 0 0	86 0 0	14,522 0 [illegible]	2,959	2,20
Per mile of railway corresponding week of previous year ...	446	111 0 0	570 [illegible]	57 [illegible]	1 0 0	169 0	...	...
Total to corresponding date of previous year	278,852	79,517 0 0	3,84,483 0	34,470 0 0	5,388 0 0	1,19,375 0 [illegible]	31,450	21,02

COOCH BEHAR STATE RAILWAY.

Approximate Return of Traffic and Mileage for the week ended 13th September 1902 on 33·6 miles open.*

	Coaching Traffic.		Merchandise and Mineral Traffic.		Other earnings (including ferry).	Total earnings.	Traffic Train-Mil	
	Number of passengers.	Coaching receipts.	Weight carried.	Receipts.			Coaching.	Merchandise.
		Rs. A. P.	Mds. s.	Rs. A. P.	Rs. A. P.	Rs. A. P.		
Total traffic for the week	2,240	730 0 0	6,750 0	950 0 0	30 0 0	1,710 0 0	295	2,225†
Or per mile of railway	67	22 0 0	201 0	28 0 0	1 0 0	51 0 0	.....	.....
For previous 10 weeks of half-year	25,020	8,480 0 0	78,290 0	9,780 0 0	200 0 0	18,460 0 0	2,751	19,923
Total for 11 weeks ...	27,260	9,210 0 0	85,040 0	10 730 0 0	230 0 0	20,170 0 0	3,046	22,148
Comparison.								
Total for corresponding week of previous year	1,803	594 0 0	7,896 0	1,193 0 0	111 0 0	1,893 0 0	258	330
Per mile of railway corresponding week of previous year	53	18 0 0	234 0	35 0 0	.....	53 0 0	.....	.....
Total to corresponding date of previous year	21,491	7,873 0 0	78,533 0	9,174 0 0	1,482 0 0	18,529 0 0	2,633	7,201

* Corrected as per revised statement submitted by Engineer-in-Chief.
† Includes Ballast train-miles 2,000.

BENGAL AND NORTH-WESTERN RAILWAY.

Approximate Return of Traffic for the week ending 13th September 1902 on 1,261 miles open.

	Coaching Traffic.		Merchandise and Mineral Traffic.		Other earnings (estimated), including steam-boat.	Total earnings.	Traffic Train-Mile	
	Number of passengers.	Receipts.	Weight carried.	Receipts.			Coaching.	Merchandise.
		Rs.	Mds.	Rs.	Rs.	Rs.		
Traffic for the week on 1,263 miles open	164,750	62,530	4,65,810	50,360	10,510	(a) 1,23,400	41,243	(b) 31,018
Or per mile of railway ...	130·65	49·59	369·40	39 94	8·33	97·86	.....	.....
For previous 9½ weeks of half-year	1,814,650	7,05,070	52,85,680	5,89,100	1,52,570	14,46,740	397,931	303,601
Total for 10½ weeks	1,979,400	7,67,600	57,51,490	6,39,460	1,63,080	15,70,140	439,174	334,619
Comparison.								
Total for corresponding week of previous year on 1,251 miles open	162,610	56,937	3,11,040	40,772	10,579	1,08,288	34,552	(c)24,192
Per mile of corresponding week of previous year	137·57	48·17	263·15	34·49	8·95	91·61	.....	.....
Total to corresponding date of previous year	1,942,310	7,32,614	59,74,253	6,48,621	1,70,977	15,52,232	374,214	307,742

(a) Increase due to improved traffic. Under goods the increase is mainly due to Rs. 7,120 on account of railway material and ballast trains.
(b) Includes 7,138 miles of ballast trains run on open line.
(c) ,, 8,206 ,, ,, ,,

DARJEELING-HIMALAYAN RAILWAY COMPANY, LIMITED.

		Rs.	A.	P.	Rs.	A.	P.
oximate earnings for the week ending 13th Sept. 1902 ...	Coaching ...	4 017	0	0			
	Goods ..	10,772	0	0	14,855	0	0
	Other earnings ..	66	0	0			
ed earnings for the corresponding period of 1901 ...	Coaching .	7,800	0	0			
	Goods	6,714	0	0	14 562	0	0
	Other earnings	48	0	0			
	Increase ...				293	0	0
pts per mile for the week ending 13th Sept. 1902					291	4	5
)itto for the corresponding period of 1901					285	8	6
	Increase ...				5	11	11
pts from 1st July to 13th Sept. 1902					1,45,917	0	0
to for the corresponding period of 1901					1,52 533	0	0
	Decrease ...				6,616	0	0

...nted at the Printing Office, and published by the Book Depôt, of the Bengal Secretariat, Writers' Buildings, in the City of Calcutta, on 24th September 1902.